0097483

U.S. Department of Energy
Office of River Protection
P.O. Box 450, MSIN H6-60
Richland, Washington 99352

JUL 1 1 2011

11-ESQ-160

Ms. Jane A. Hedges, Program Manager
Nuclear Waste Program
Washington State
Department of Ecology
3100 Port of Benton Blvd.
Richland, Washington 99354

Dear Ms. Hedges:

SUBMITTAL OF HANFORD FACILITY RESOURCE CONSERVATION AND RECOVERY ACT (RCRA) PERMIT MODIFICATION NOTIFICATION FORM 24590-HLW-PCN-ENV-05-010

Reference: WA7890008967, "Dangerous Waste Portion of the Hanford Facility Resource Conservation and Recovery Act Permit for the Treatment, Storage, and Disposal of Dangerous Waste, Operating Unit 10, 'Waste Treatment and Immobilization Plant.'"

This letter transmits Hanford Facility RCRA Permit Modification Notification Form 24590-HLW-PCN-ENV-05-010, attached, for the Washington State Department of Ecology (Ecology) review and approval. The form describes a requested Class 1 modification requiring concurrence or approval to the Reference.

Modification Notification Form 24590-HLW-PCN-ENV-05-010 submits Mechanical Data Sheet 24590-HLW-MKD-HOP-00019 and Engineering Specification 24590-HLW-3PS-MBTV-T0002 for the High-Level Waste Melter Offgas Treatment Process System Thermal Catalytic Oxidizers/Reducers, (HOP-SKID-00005/7) to replace the permitted data sheets currently located in Appendix 10.6 of the Reference and the permitted specification located in Appendix 10.7 of the Reference.

Ecology was provided an opportunity to review the modification notification form and the associated information and comments were dispositioned.

408

If you have any questions, please contact me, or your staff may contact Gae M. Neath, Environmental Compliance Division, (509) 376-7828.

Sincerely,

Paul G. Harrington, Acting Assistant Manager
Office of Environmental Safety and Quality

ESQ:GMN

Attachment

cc w/attach:
B. L. Curn, BNI
B. Dubiel, BNI
B. G. Erlandson, BNI
P. A. Fisher, BNI
S. K. Murdock, BNI
F. M. Russo, BNI
Administrative Record (WTP H-0-8)
BNI Correspondence
Environmental Portal, LMSI

RECEIVED
JUL 13 2011
EDMC

cc electronic:
A. S. Carlson, Ecology
S. L. Dahl, Ecology (1 hard copy)
M. K. Faber, Ecology
M. E. Jones, Ecology
D. W. Mears, Ecology
J. J. Wallace, Ecology (2 hard copies)
~~T. R. Williams, Ecology~~
J. F. Ollero, MSA
A. C. McKarns, RL
D. J. Sommer, SCS

cc w/o attach:
D. M. Busche, BNI
J. Cox, CTUIR
S. G. Harris, CTUIR
D. McDonald, Ecology
G. P. Bohnee, NPT
K. Niles, Oregon Energy
S. R. Weil, RL
R. Jim, YN

Attachment
11-ESQ-160
(77 Pages)

Hanford Facility RCRA Permit Modification Notification
Form 24590-HLW-PCN-ENV-05-010

Quarter Ending 09/30/2011 24590-HLW-PCN-ENV-05-010

Hanford Facility RCRA Permit Modification Notification Form

Part III, Operating Unit 10

Waste Treatment and Immobilization Plant

Index

Page 2 of 3: Hanford Facility RCRA Permit, Part III, Operating Unit 10, Waste Treatment and Immobilization Plant

Replace HLW Plant Item Mechanical Data Sheets 24590-HLW-MKD-HOP-P0019 and 24590-HLW-MKD-HOP-P0020 in Appendix 10.6 and Specification 24590-HLW-3PS-MBTV-T0002 for the HLW Facility Thermal Catalytic Oxidizer/Selective Catalytic Reducer (HOP-SKID-00005/7) in Appendix 10.7 of the Dangerous Waste Permit (DWP).

Submitted by Co-Operator:

Donna Busche 6/15/11

D. M. Busche Date

Reviewed by ORP Program Office:

7/8/11

D. L. Noyes Date

Quarter Ending 09/30/2011 24590-HLW-PCN-ENV-05-010

Hanford Facility RCRA Permit Modification Notification Form	
Unit: **Waste Treatment and Immobilization Plant**	Permit Part: **Part III, Operating Unit 10**

Description of Modification:

The purpose of this Class 1 prime modification is to update the mechanical data sheets and specification for the HLW Facility Thermal Catalytic Oxidizer/Selective Catalytic Reducer (HOP-SKID-00005/7). The following documents are submitted to replace the documents currently included in Appendices 10.6 and 10.7. Note that HOP-SKID-00006/8 are not included in the scope of this PCN because they are ammonia/air dilution skids and do not manage dangerous waste.

Appendix 10.6			
Replace:	24590-HLW-MKD-HOP-P0019, Rev. 0	With:	24590-HLW-MKD-HOP-00019, Rev. 10
	24590-HLW-MKD-HOP-P0020, Rev. 0		
Appendix 10.7			
Replace:	24590-HLW-3PS-MBTV-T0002, Rev. 0	With:	24590-HLW-3PS-MBTV-T0002, Rev. 1

This modification requests Ecology approval and incorporation into the permit the specific changes to the above documents that are identified by revision bars or triangles indicating changes since the last revision of the document. Changes to earlier revisions of source documents not captured by change bars are identified in the revision history summary. Revisions are the result of ongoing design (changes from vendor preliminary design to vendor detailed design) and incorporates general criteria from design verification reviews.

Significant changes to data sheet 24590-HLW-MKD-HOP-00019, *HLW Catalytic Oxidizer/Reducer*, for HOP Skids HOP-SKID-00005 and HOP-SKID-00007, are summarized below:

- Revised Quality Level to CM
- Revised Plant Item Number
- Added reference calculations and drawings
- Revised Offgas Inlet Conditions and added Offgas Outlet Conditions
- Added and revised Process Data Notes
- Revised Ammonia Supply conditions
- Added Ammonia Dilution Air Supply conditions
- Added Process Performance Requirements
- Revised Mechanical Data
- Removed Process Piping and Housing Fabrication Data
- Revised System Performance data
- Revised Components (Seller) data
- Added Ammonia/Air Dilution Skid Requirements
- Added Catalytic Oxidizer/Reducer Skid Requirements
- Added Equipment Qualification Datasheet
- Increased pressure drop across the HLW TCO
- Extended the HLW TCO envelope to reach the next available embed plate
- Revised the environmental qualification specifications to align with the WTP authorization basis
- Refined seismic and environmental qualifications for instruments that are safety significant
- Added corrosion and erosion allowances

Quarter Ending 09/30/2011 24590-HLW-PCN-ENV-05-010

Significant changes to specification 24590-HLW-3PS-MBTV-T0002, *Engineering Specification for HLW Thermal Catalytic Oxidizers/Reducers*, are summarized below:

- Incorporated TCNs 24590-CM-MRA-MBT0-00002-T0002, T0004, T0007, and T0009
- Incorporated by reference SDDR 24590-WTP-SDDR-MS-10-00004 and 10-00115
- Revised sample tap size
- Revised equipment shim details
- Added corrosion and erosion allowances for HLW TCO

This modification requests Ecology approval and incorporation of the following outstanding change document into the permit. Although not yet incorporated into the revised documents included in this PCN, the listed change document is intended to be incorporated into the permit.

24590-WTP-SDDR-MS-11-00051

WAC 173-303-830 Modification Class:	Class 1	Class [1]1	Class 2	Class 3
Please mark the Modification Class:		X		

Enter relevant WAC 173-303-830, Appendix I Modification citation number: NA

Enter wording of WAC 173-303-830, Appendix I Modification citation:

In accordance with WAC 173-303-830(4)(d)(i), this modification notification is requested to be reviewed and approved as a Class [1]1 modification. WAC 173-303-830(4)(d)(ii)(A) states, "Class 1 modifications apply to minor changes that keep the permit current with routine changes to the facility or its operation. These changes do not substantially alter the permit conditions or reduce the capacity of the facility to protect human health or the environment. In the case of Class 1 modifications, the director may require prior approval."

Modification Approved/Concur: ☐ Yes ☐ Denied (state reason below) Reason for denial:	Reviewed by Ecology:
	J. J. Wallace Date

River Protection Project Waste Treatment Plant	**MECHANICAL DATA SHEET** **HLW Catalytic Oxidizer / Reducer** ISSUED BY RPP-WTP PDC R11377941	**PLANT ITEM No.** 24590-HLW-MX-HOP-SKID-00005 24590-HLW-MX-HOP-SKID-00006 24590-HLW-MX-HOP-SKID-00007 24590-HLW-MX-HOP-SKID-00008 Data Sheet No. / Rev. 24590-HLW-MKD-HOP-00019 / 10

Project:	RPP-WTP	System Description	Thermal Catalytic Oxidizer/Selective Catalytic Reduction
Project No.:	24590		
System No.:	HOP	Reference Docs.	Specification: 24590-HLW-3PS-MBTV-T0002 Process Calc.: 24590-HLW-MKC-HOP-00010 Process Calc.: 24590-HLW-M4C-HOP-00011 Process Calc.: 24590-HLW-M6C-HOP-00013
Building:	HLW		
Quality Level	CM	Associated Dwgs.	24590-HLW-M5-V17T-20004, -00004 24590-HLW-M6-HOP-20008, -00008 24590-HLW-P1-P23T-00112, -00117
Safety Classification	SS		
Seismic Criteria	Category III		

ITEMS MARKED WITH * ARE TO BE PROVIDED BY VENDOR

Process Data (Buyer)

Offgas Inlet Conditions:

		Nominal	Maximum	Design
Vol. Flow	(acfm) (scfm)	2448 1465	3102 1750	N/A 2000 (Process Note 5)
Temperature	(°F)	330	330	355 (Process Note 5)
Pressure	(in. WG)	-39	-45	-82 / +84
Density	(lb/ft³)	0.0432	0.395	0.038
Allow. Diff. Pres.			(in. WG)	15

Offgas Inlet Composition:

		Nominal	Maximum
N_2	(% Volume)	69.5 %	63.7 %
O_2	(% Volume)	18.7 %	17.1 %
H_2O	(% Volume)	10.6 %	18.0 %
CO_2	(% Volume)	0.36 %	0.38 %
Ar	(% Volume)	0.83 %	0.76 %

Offgas Outlet Conditions:

		Nominal	Maximum	Design
Temperature	(°F)	*	*453 (Note 7)	Note 1
Maximum Ammonia Slip, ppm			50	50
Design Temperature (Process Note 1)				*1000 F

Minor Offgas Components (Process Note 5)	Maximum, kg/hour	Bounding, kg/hour
NH_3	4.37E-03	3.19E-02
NO	5.79E-01	1.88E+00
N_2O	1.25E-02	1.50E-01
NO_2	9.66E-02	2.25E+00
CO	1.70E-02	4.07E+00
SO_2	6.70E-03	2.05E-02
H_2	3.53E-03	8.79E-02
Hg	1.25E-04	2.57E-04
HCl	6.58E-06	1.77E-05
HF	3.99E-06	1.63E-05
I_2	1.11E-06	1.11E-06
Particulate	4.34E-11	2.11E-10
VOC/SVOC	2.76E-03	3.20E-03

Process Data Notes:

1. Seller's design outlet temperature based on the Thermal Catalytic Oxidizer/Selective Catalytic Reducer vessel and internal component temperatures using thermodynamic activities in the equipment. Design temperature per Seller = __*1000__ °F
2. Deleted
3. Deleted.
4. Maximum step changes in NO and NO_2 concentrations over a ten-minute period may be as high as 500 ppmv. Minimum NOx concentration is 0 ppmv.
5. Heater sizing for initial heat-up to system operating temperature shall not credit contribution from minor offgas components and specified design flow and temperature (inlet conditions).
6. Maximum SO_2 listed does not include transient spikes.
7. Based on heat exchanger efficiency of 70%. See vendor submittal 24590-CM-POA-MBT0-00002-03-00001 for verification of design temperature.

Ammonia Supply:

		Nominal	Maximum	Design
Temperature	(°F)	55	117	150
Internal Pressure	(psig)	16	45	300
Solids Content	(wt. %)	0 %	0 %	0%

Ammonia Dilution Air Supply:

		Nominal
Pressure	(psig)	110
Filtration	(microns)	3
Inlet Nozzle Size	(in)	2

Ammonia Note:

Buyer will supply anhydrous ammonia at Seller's specified flowrate to meet design conditions. Seller is responsible for flow control of anhydrous ammonia to meet performance requirements. Ammonia vaporizer assures nominal conditions.

Ammonia Dilution Air Note:

Buyer will supply ammonia dilution air at Seller's specified flowrate to meet design conditions. Seller is responsible for flow and pressure control of dilution air to meet performance requirements.

Ammonia Note:
Buyer will supply anhydrous ammonia at Seller's specified flow rate to meet design conditions. Seller is responsible for flow control of anhydrous ammonia to meet performance requirements. Ammonia vaporizer assures nominal conditions.

Ammonia Dilution Air Note:
Buyer will supply ammonia dilution air at Seller's specified flow rate to meet design conditions. Seller is responsible for flow and pressure control of dilution air to meet performance requirements.

The following Process Performance Requirements are the WTP permits performance requirements that shall be used by the Buyer to verify Seller's System Performance requirements are met:

1. The maximum achievable control technology (MACT) destruction removal efficiency (DRE) for volatile organic compounds (VOCs) and semi-volatile compounds (SVOCs) shall be greater than or equal to 95%. The principal organic dangerous constituents (PODCs) to be used in HLW performance testing are naphthalene (CAS 91-20-3) and 2-propene-1-ol (CAS 107-18-6). A DRE greater than 95% is preferred.
2. The NOx (defined as NO and NO_2) Selective Catalytic Reduction (SCR) unit shall perform with a reduction efficiency of 95%.
3. Dioxin and furan emissions at the outlet of the Thermal Catalytic Oxidizer/Reducers shall meet the MACT criteria of 0.2 ng/m^3 TEQ (Toxic Equivalent).
4. Maximum inlet loading 0.7 grams per minute naphthalene and 2.0 grams per minute allyl alcohol, and a minimum oxidation catalyst outlet temperature of 700°F shall be used as the basis for DRE determination. (General Note 9)
5. Carbon monoxide (CO) emission shall meet the MACT criteria of 100 parts per million (ppm) by volume, over an hourly rolling average, dry basis.
6. Hydrocarbon emission shall meet the MACT criteria of 10 parts per million (ppm) by volume, over an hourly rolling average dry basis and reported as propane.

Please note that source, special nuclear and byproduct materials, as defined in the Atomic Energy Act of 1954 (AEA), are regulated at the US Department of Energy (DOE) facilities exclusively by DOE acting pursuant to its AEA authority. DOE asserts, that pursuant to the AEA it has sole and exclusive responsibility and authority to regulate source, special nuclear, and byproduct materials at DOE-owned nuclear facilities. Information contained herein on radionuclides is provided for process description purposes only.

Safety Screening required?: Yes X No__ (If yes per 24590-WTP-GPP-SREG-002, E&NS signature required below)

River Protection Project **Waste Treatment Plant**	**MECHANICAL DATA SHEET** **HLW Catalytic Oxidizer / Reducer**	**PLANT ITEM No.** **24590-HLW-MX-HOP-SKID-00005** **24590-HLW-MX-HOP-SKID-00006** **24590-HLW-MX-HOP-SKID-00007** **24590-HLW-MX-HOP-SKID-00008** Data Sheet No. / Rev. **24590-HLW-MKD-HOP-00019** / **10**

Approvals

Rev	Reason for revision	Systems/ Process Eng.	Equipment Eng.	Checked	E&NS	EQ	MET	Approved	Date
10	Re instate 1750 (scfm) max flow rate. Fix typos and re instate general notes.	R Peters	D Rickettson	R. RICKENBACH ~~G Goolsby~~	C Meng	N/A	N/A	D Wilsey	6-3-11
9	Incorporate TCN 24590-CM-MRA-MBT0-00002-T0003, T0008, & T0009 and SDDR 24590-WTP-SDDR-MS-10-00022 & 00135	M. O'Neill	T. Henry	D. Rickettson	C Meng	N/A	D Adler	J Schneider	25-Feb-11
8	General Revision - Major revision. No revision triangle required.	M. O'Neill	T.Valenti	G. Goolsby	C. Meng	N/A	Steve Vail for R. Davis	J. Roth	9-Apr-09
7	Changed temperature for HLW-SCR-00001. Added 25 °F design margin per 24590-WTP-GPG-M-017. Added Ammonia Piping Material Type. Added MET as reviewer.	M. O'Neill	J. Wood	U. Sen	C. Meng	Phil Snyder for J. White	R. Davis	J. Julyk	17-Mar-08
6	Consolidated data sheets, this revision supersedes 24590-HLW-MKD-HOP-00020 Rev 5. Added safety classification. Revised process data note 2. Revised process performance requirement note 1. Added subcomponent IDs to Component table. Revised note 4. Includes new EEQ data. Includes HPAV screening and Dangerous waste permitting statement.	Mike O Neill	Josh Wood	Utpal Sen	Chris Meng	Dick Hills		John Julyk	14-Feb-08
5	Minor Change: Attachment 1, included on the EDR copy, was missing from the issued Rev 4 data sheet, this revision includes the missing attachment. Rev 4 triangles are kept for clarity to show changes from Rev 3.	Tom Galioto	Anthony Cutrona	Craig Knauss	Chris Meng	N/A		John Julyk	26-Jun-07
4	Updated quality level designator. Revised offgas inlet conditions and composition. Added Note 8 and Attachment 1. Added EQ data. Revised ammonia and dilution air supply conditions. Added Safety signature to Approval block. Updated Vendor data per 24590-CD-POA-MBT0-00002-07-00001.	Tom Galioto	Anthony Cutrona	Craig Knauss	Chris Meng	N/A		John Julyk	21-May-07
3	Revised housing material and system performance. Added NOx step change requirement and ammonia skid layout requirements.	Jim Rouse	David Pease	Chris Morley	N/A	N/A		Mark Hoffmann	31-Jul-05
2	Revised catalyst model number per SDDR 24590-WTP-SDDR-PROC-04-00879, and added dilution air, outlet piping, and ammonia skid requirements.	J. Rewari / J. Rouse	D. Pease	C. Morley	N/A	N/A		M. Hoffmann	8-Nov-04
1	Revised Seller Information	J. Medina / J. Rouse	D. Pease	C. Morley	N/A	N/A		M. Hoffmann	4-May-04
0	Issued for Purchase. This data sheet supercedes 24590-HLW-MKD-HOP-00015 R/1.	J. Medina / J. Rouse	D. Pease	D. Yarbrough C. Morley	N/A	N/A		M. Wright	8-Apr-04

River Protection Project Waste Treatment Plant	**MECHANICAL DATA SHEET** **HLW Catalytic Oxidizer / Reducer**	**PLANT ITEM No.** 24590-HLW-MX-HOP-SKID-00005 24590-HLW-MX-HOP-SKID-00006 24590-HLW-MX-HOP-SKID-00007 24590-HLW-MX-HOP-SKID-00008 Data Sheet No. / Rev. 24590-HLW-MKD-HOP-00019 / 10

Mechanical Data (Buyer)

Construction Data:

Process Equipment Dimensions (L x W x H):

Sections (Applicable Only to the Catalytic Oxidizer/Reducer Skids)	17'-0" x 5'-0" x 10'-9"	ft
Overall	39'-6" x 5'-0" x 17'-6"	ft
Operating Weight	*70,830	lbf
Shipping Dimensions (L x W x H)	*18' 0" x 6' 10" x 12'	ft
Shipping Weight	*70,830	lbf

Ammonia Dilution Equipment (L x W x H):

Ammonia Dilution Skid dimensions	14'-6" x 5'-6" x 7'-6"	ft
Operating Weight	*~15,000	lbf
Shipping Dimensions (L x W x H)	15' x 6' x 7.5'	ft
Shipping Weight	*~15,000	lbf

Thermal Analysis Data:

Room Temperature	83	°F
Earth Temperature Under Base	70	°F
Maximum Heat Loss	15	Kw

Concrete Slab Base Thickness	3	ft
Thermal Conductivity of Concrete Slab	1.8	W / m / K

Thermal Cycling Frequency:
For design purposes, use a thermal cycle frequency of once every two (2) months for the life of the plant (40 years).

Nozzle Loading (Buyer, See Note 1)

Inlet:

Load Case	Fa (lb)	Fb (lb)	Fc (lb)	Ma (ft-lb)	Mb (ft-lb)	Mc (ft-lb)
Weight	400	-500	400	1000	3000	-1000
Thermal (+)	200	1000	200	2000	2000	2000
Thermal (-)	-4400	-1000	-1000	-7000	-15000	-25000
Seismic (+)	3500	3500	3500	11000	18000	18000
Seismic (-)	-3500	-3500	-3500	-11000	-18000	-18000
Normal (+)	600	500	600	3000	5000	1000
Normal (-)	-4000	-1500	-600	-6000	-12000	-26000
Occasional (+)	4100	4000	4100	14000	23000	19000
Occasional (-)	-7500	-5000	-4100	-17000	-30000	-44000

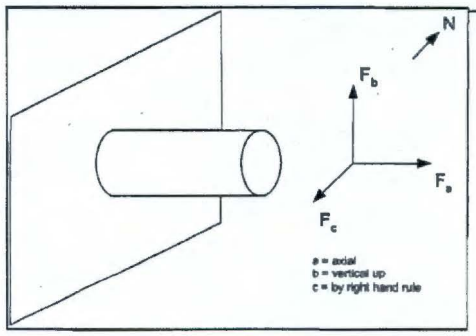

See supplier submittal 24590-CM-POA-MBT0-00002-05-00009 for nozzle movement values.

River Protection Project Waste Treatment Plant	**MECHANICAL DATA SHEET** **HLW Catalytic Oxidizer / Reducer**	**PLANT ITEM No.** **24590-HLW-MX-HOP-SKID-00005** **24590-HLW-MX-HOP-SKID-00006** **24590-HLW-MX-HOP-SKID-00007** **24590-HLW-MX-HOP-SKID-00008** Data Sheet No. / Rev. **24590-HLW-MKD-HOP-00019** / **10**

Outlet:

Load Case	Fa (lb)	Fb (lb)	Fc (lb)	Ma (ft-lb)	Mb (ft-lb)	Mc (ft-lb)
Weight	-1700	400	400	-200	-500	500
Thermal (+)	2000	1000	2000	100	13000	1000
Thermal (-)	-1300	-2000	-2000	-20000	-2000	-16000
Seismic (+)	4200	6600	6600	9500	75000	75000
Seismic (-)	-4200	-6600	-6600	-9500	-75000	-75000
Normal (+)	300	1400	2400	800	12500	1500
Normal (-)	-3000	-1600	-1600	-20200	-2500	-15500
Occasional (+)	4500	8000	9000	10300	87500	76500
Occasional (-)	-7200	-8200	-8200	-29700	-77500	-90500

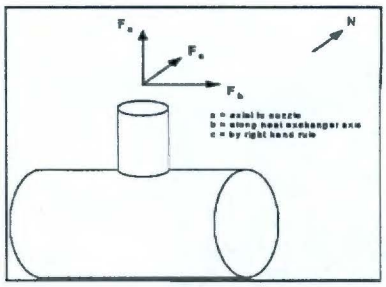

See supplier submittal 24590-CM-POA-MBT0-00002-05-00009 for nozzle movement values.

Notes:
1. Normal = Weight + Thermal
2. Occasional = Weight + Thermal + Seismic

River Protection Project Waste Treatment Plant	**MECHANICAL DATA SHEET** **HLW Catalytic Oxidizer / Reducer**	**PLANT ITEM No.** 24590-HLW-MX-HOP-SKID-00005 24590-HLW-MX-HOP-SKID-00006 24590-HLW-MX-HOP-SKID-00007 24590-HLW-MX-HOP-SKID-00008 Data Sheet No. / Rev. 24590-HLW-MKD-HOP-00019 / 10

System Performance (Seller, General Note 2)

Volatile Organic DRE	*95	%	Semi-Volatile Organic DRE		*95	%	
NOx Reduction	*95	%	Ammonia consumption, max		*15	lb/hr	
NOx emissions, max	*119	ppmvw	Ammonia entering injection chamber:	Pressure	*30	in-WG	
Ammonia slip, max	*10	ppmvw		Flow	*14.0	lb/hr	
Ammonia/NOx molar injection ratio	*			Temp.	*100	°F	
Pressure drop through Oxidizer unit	*10	in-WG	Dilution Air:	Pressure	*80	in-WG	
Minimum service life catalyst:				Flow	*200	scfm	
VOC Catalyst	*3	yrs (EST.)					
NOx Catalyst	*3	yrs (EST.)					

Recommended Catalyst replacement schedule: Replacement schedule could be 1-2 year intervals.

Components (Seller, General Note 2)

Catalyst:	**Organic: HOP-SCO-00001 & 00004**	**NOx: HOP-SCR-00001 & 00002**
Manufacturer	BASF (VOCat 300S) "Source Controlled"	*BASF NO_xCAT VNX-300
Number of reactors	1	1
Number of catalyst modules	*27	*27
Residence time (at standard conditions), sec	0.75 (General Note 9)	*
Arrangement	*3 High x 3 Wide	*3 High x 3 Wide
Total catalyst reactor vol. ft^3	*22.5	*22.5
Type	Precious metal - platinum	*Vanadium/Titanium Oxide
Material: base/substrate	Ceramic - cordierite	*Ceramic Cordierite
Total Number of layers per reactor	3	*3
Thickness of layer, in	*10	*10
Space provided between layers for remixing	Yes	*
Space for additional layer, in	No	*No
Is dummy layer provided	No	*No
Number of flow passages	*230 cpsi	*64
Flow passage, in. x in.	0.060" x 0.060"	*0.11" x 0.11"
Face velocity thru reactor, fpm	*427	*427
Outlet Offgas Temperature for site performance testing, °F	700 (Min) - 750 (Nominal)	*700 (Min) - 750 (Nominal)
Design Temperature, °F	*750	*750
Catalyst module Dimensions, (L x W x D)	*12" x 12" x 10"	*12" x 12" x 10"
Catalyst module weight, lb	*50	*50
Total weight of catalyst reactor, lb	*1,350	*1,350
Housing:		
Material Type	347 SS	347 SS
Material/Thickness, in	*3/8	*3/8
Number of Section	*1	*1
Weight of Heaviest Section, lb	*10,500	*10,000
Insulation Lining	*Microporous (Super G)	*Microporous (Super G)
Material/Thickness, in	*4	*4
Thermal Cond, Btu-in/hr ft^2 °F	*0.50 - 0.84	*0.50 - 0.84
Method of Attachment	*Studs with clips	*Studs with clips
Design pressure, psig	*see Offgas Inlet Conditions on pg. 1	
Operating pressure, psig	*see Offgas Inlet Conditions on pg. 1	
Design temperature, °F	*See General Note 10	
Corrosion Allowance	0.010 inch	0.010 inch
Erosion Allowance	None	None

Ducting:		
Material/Thickness, in	*347SS / 3/8	*347SS / 3/8
Cross Section, ft x ft	*Inlet = 18" x 24" / Outlet = 4' x 5'	*Inlet = 18" x 24" / Outlet = 4' x 5'
Duct Velocity, fpm	*Inlet = 1034 / Outlet = 200	*Inlet = 1034 / Outlet = 200
Design Temperature, °F	*See General Note 10	
Corrosion Allowance	0.010 inch	0.010 inch
Erosion Allowance	None	None
Electric Heater: HOP-HTR-00001 & 00007		
Manufacturer	*CCI Thermal	
Type	*Tubular Elements	
Number of Heat Zone	*24 Heating Elements / Zone	
Number of Zones	*5	
Watt Density, W/in^2	*8.6	
Power, kW	*	
Voltage/Current rating	*480v /	
Wetted Material Type	*347 SS	
Heating Element & Enclosure Material Type	*Incoloy 800	
High Temp. Surface Material Type	347 SS	
Design Temperatuer, °F	*1000	
Corrosion Allowance (Electric Heater Housing)	0.010" (does not include heater element components)	
Erosion Allowance	None	
Recuperative Heat Exchanger: HOP-HX-00001 & 00003		
Manufacturer	*Thermo Z / Munters - Deschamps	
Type	*Plate / Frame	
Cold Side Components & Enclosure Material Type	347 SS	
Hot Side Components/Tubes	347 SS / 439 SS	
Ht transfer coefficient, Btu/hr ft^2 °F	*3.20	
Heat exchange area, ft^2	*1,756	
ΔT (LMTD), °F	*122	
Heat Eexchanger duty, Btu/hr	*674,764	
Design Temperautre, °F	*See General Note 10	
Corrosion Allowance	0.010 inch, No corrosion allowance required for heat transfer surface	
Erosion Allowance	None	
Ammonia Injection Manifold: (Note 7)		
Type/Arrangement	*Spray Nozzle Grid	
Feed Inlet Dia. in	*2	
Supply Pressure/Temp (psi/°F)	*0.5 / 100	
Material Type	347 SS (Vessel Internals) 316L SS (External to Vessel)	
No. of nozzle bars per manifold	*4	
No. of nozzles per bar	*12	
Spacing between nozzles, in	*7.5 - 10	
Nozzle opening diameter, in	*0.0625	
Corrosion Allowance	0.010 inch	
Erosion Allowance	None	
Weight		
Shipping (Heaviest), lb	*5,470	
Installed, lb	*70,830 (Installed operating weight of the complete TCO/SCR skid)	
Shipping dimension (L x W x H), ft	*18' x 6' x 12'	*18' x 6' x 12'

Ammonia / Air Dilution Skid Layout (HOP-SKID-00006 and 00008)

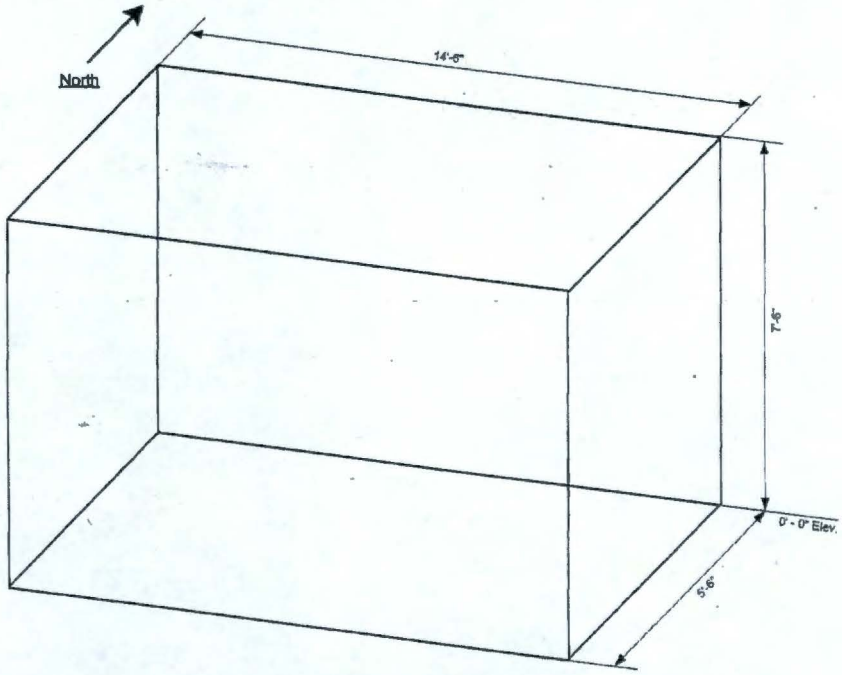

HOP-SKID-00006 (Typical of HOP-SKID-00008)

Ammonia / Air Dilution Skid Requirements:

1. All equipment and appurtenances including any platforms, ladders, etc. must fit within the space envelope.

Catalytic Oxidizer / Reducer Skid Layout (HOP-SKID-00005 and 00007)

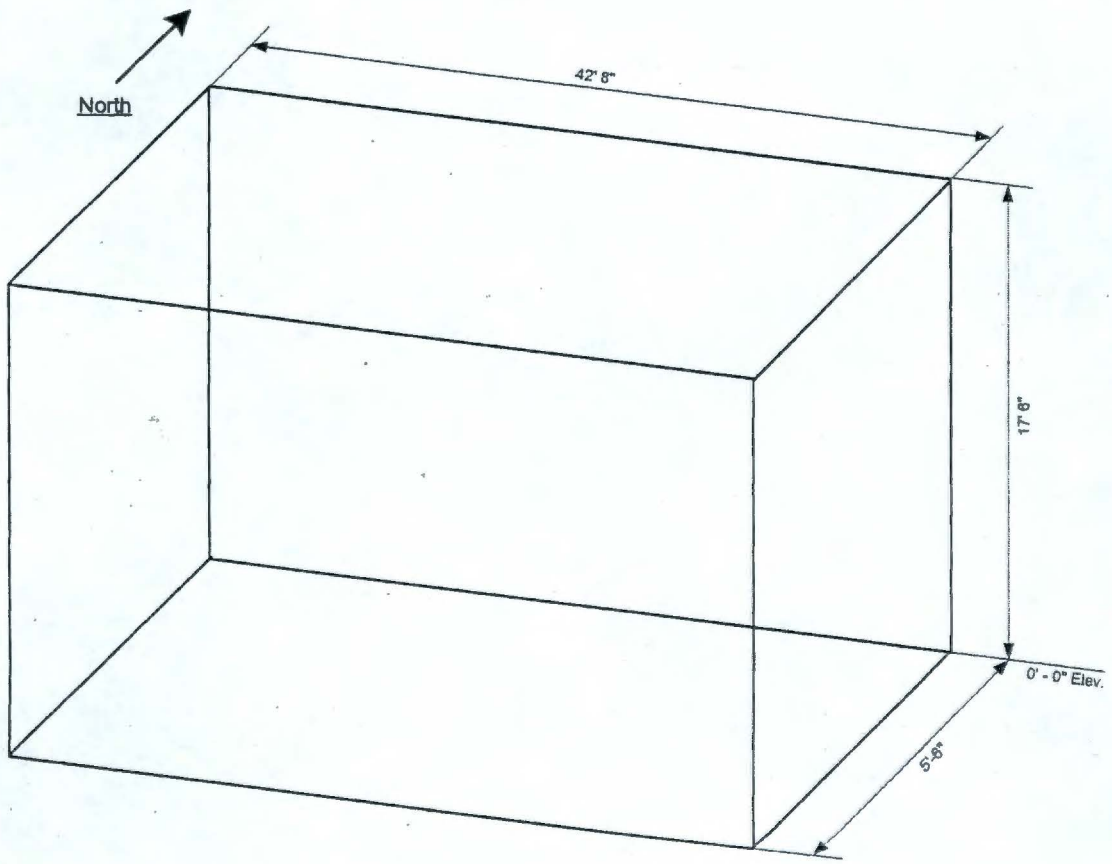

Catalytic Oxidizer / Reducer Skid Requirements:

1. All equipment and appurtenances including any platforms, ladders, etc. must fit within the space envelope.

2. Maximum allowable equipment dimensions are shown, except that the height for Heaters HOP-HTR-00001 / 00007 shall include space for maintenance access. If height is exceeded, heaters shall be moved to above structural steel at the 12'-9" elevation.

Notes

GENERAL NOTES:

1. Nozzle location and orientation shall be as shown on drawing 24590-CM-POA-MBT0-00002-04-00002. Nozzle location tolerance = ±1/2" (X,Y,Z).
2. Seller to confirm values.
3. Seller's data is rounded and based on preliminary engineering design.
4. Catalytic Skid and Sub component tag numbers follow:
   Melter 1: HOP-SKID-00005: HOP-HX-00001, HOP-HTR-00001, HOP-SCO-00001, HOP-SCR-00001
   Melter 2: HOP-SKID-00007: HOP-HX-00003, HOP-HTR-00007, HOP-SCO-00004, HOP-SCR-00002
5. Data marked with an asterisk is or will be provided by Seller.
6. Contents of this document are Dangerous Waste Permit Affecting.
7. Ammonia / Air Injection Manifold design shall be finalized after flow modeling results.
8. Equipment location is shown on Drawings 24590-HLW-P1-P23T-00112 and 24590-HLW-P1-P23T-00117.
9. Oxidation catalyst residence time is based on pilot plant performance at the Catholic University's Vitreous State Laboratory (VSL). Reference *Regulatory Off-Gas Emissions Testing on the DM1200 Melter System Using HLW and LAW Simulants*, 24590-101-TSA-W000-0009-166-00001. Offgas VOC content is based on *Small Scale Melter Testing for Allyl Alcohol Method Verification*, VSL-08R1390-1.
10. * Inlet at recuperative heat exchanger shall use a operating temperature of 355 ^{0}F (T_1). From the outlet of the recuperative heat exchanger to the inlet of the electric heater the operating temperature shall be 660 ^{0}F (T_2). The electric heater shall be designed for 1000 ^{0}F. The electric heater outlet pipe and SCO and SCR housings shall be designed using a 1000 ^{0}F temperature. Electric heater controls shall limit the offgas temperature to 750 ^{0}F to insure catalyst performance. Inlet of the recuperative heat exchanger (T_3) shall use operating temperature of 750 ^{0}F. Outlet of the recuperative heat exchanger (T_4) shall use a operating temperature of 490 ^{0}F.
    See vendor drawing numbers 24590-CM-POA-MBT0-00002-03-00038 and 24590-CM-POA-MBT0-00002-04-00030 for location of T1, T2, T3, and T4.

EQUIPMENT QUALIFICATION DATASHEET (EQD)

Equipment Identification		
Full Component Tag Number or BNI Stock Code Number	24590-HLW-MX-HOP-SKID-00005 24590-HLW-MX-HOP-SKID-00006 24590-HLW-MX-HOP-SKID-00007 24590-HLW-MX-HOP-SKID-00008	Safety Classification ☐ SC ☒ SS ☐ APC-PAM
Equipment Datasheet Number	24590-HLW-MKD-HOP-00019	
Description	HLW Thermal Catalytic Oxidizer/Reducer for HLW Secondary Offgas Treatment Manufacturer: IONEX	Seismic Category ☐ SC-I ☐ SC-II ☒ SC-III ☐ SC-IV ☐ SC-III Seismic Interaction only
Location (Facility / Building and Room No.)	HLW/H-A123	
Safety Function(s)	The following are the Safety Significant functions of the TCO credited for DBE: • Confinement of melter offgas • Catalyst skid electric heater (HOP-HTR-00001/00007) high temperature interlock. Heater to be shut down at a given high temperature set point to prevent over temperature condition. (Signal from TE 0514 / 2514 to JY 0520 / 2520) • Ammonia Piping - The ammonia piping shall provide confinement of ammonia. • Ammonia Air Addition (Dilution) - To dilute and maintain the TCO/SCR ammonia concentration below the Lower Flammable Limits (LFL), air must be injected in the ammonia supply. • Ammonia Supply Isolation Valve (YV 0504/2504) - The isolation valve for the ammonia supply to the TCO/SCR shall close upon detection of low or no air injection. • Low Temperature Interlock on SCR (Signal from TE 0336/2336) - The low temperature interlock on the selective catalytic reduction unit stops the injection of ammonia (Valves YV 0504/2504 are closed). • Protect ITS electrical components from damage by liquid sprays Reference: 24590-WTP-PSAR-ESH-01-002-04, Rev 4j, Section 4.4.3.3 and 4.4.24	

Equipment Safety Function Type	☒ Passive Mechanical	☒ Active Mechanical	☒ Electrical
	TCO Housing	Valves / Flow Meters YV 0504 / 2504 FT 0517 / 2517 FT 0518 / 2518	Temperature Element TE 0514 / 2514 TE 0336 / 2336

Seismic Safety Function	Seismic Operability Requirements		
☒ Yes ☐ No	☒ During Seismic Event	☒ After Seismic Event	☐ None

EQUIPMENT QUALIFICATION DATASHEET (EQD)

Equipment Environmental Qualification (EEQ)

(Parameter values stated in this section do not include process conditions or operation induced conditions)

Classification of Environment ☒ Mild ☐ Harsh

Qualified Life (years) ☐ 40 ☒ Other

TCO Housing - 40 years

Replacable Equipment: Less than 40 years

Heaters

Recuperative Heat Exchanger

Catalyst

Parameter Type/Units	Parameter Value	Parameter Duration (number)	Duration Units	WTP Source Document Number
Normal Ambients				
High Temperature (°F)	83	Note 1a	Years	24590-HLW-U0D-W16T-00001
Low Temperature (°F)	59	Note 1a	N/A	24590-HLW-U0D-W16T-00001
High Relative Humidity (%RH)	100	Note 1a	N/A	24590-HLW-U0D-W16T-00001
Low Relative Humidity (%RH)	10	Note 1a	N/A	24590-HLW-U0D-W16T-00001
High Pressure (in.-w.g.)	0	Note 1a	N/A	24590-HLW-U0D-W16T-00001
Low Pressure (in.-w.g.)	-0.4	Note 1a	N/A	24590-HLW-U0D-W16T-00001
Radiation Dose Rate (mRad/hr)	0.5	40	Years (Note e1)	24590-HLW-U0D-W16T-00001
Plant/Process Induced Vibration	☐ Yes ☒ No			
Additional Normal Ambient Information:				
Abnormal Ambients				
High Temperature (°F)	137	8	hours / year	24590-HLW-U0D-W16T-00001
Low Temperature (°F)	40	Note 1a	N/A	24590-HLW-U0D-W16T-00001
High Relative Humidity (%RH)	100	Note 1a	N/A	24590-HLW-U0D-W16T-00001
Low Relative Humidity (%RH)	5	Note 1a	N/A	24590-HLW-U0D-W16T-00001
High Pressure (in.-w.g)	4	Note 1a	N/A	24590-HLW-U0D-W16T-00001
Low Pressure (in.-w.g)	-6.7	Note 1a	N/A	24590-HLW-U0D-W16T-00001
Radiation Dose Rate (mR/hr)	0.5	40 Note 4	Years (Note e1)	24590-HLW-U0D-W16T-00001
Exposure to Wet Sprinkler System	☒ Yes ☐ No	2 Note 5	hours	24590-HLW-U0D-W16T-00001
Additional Abnormal Ambient Information				
Design Basis Events (DBE) Ambients				
High Temperature (°F)	139	1000	hours	24590-HLW-U0D-W16T-00001
Low Temperature (°F)	40	Note 1a	N/A	24590-HLW-U0D-W16T-00001
High Relative Humidity (%RH)	100	482	hours	24590-HLW-U0D-W16T-00001

EQUIPMENT QUALIFICATION DATASHEET (EQD)

Low Relative Humidity (%RH)	5	1000	hours	24590-HLW-U0D-W16T-00001
High Pressure (in.-w.g)	4	1000	hours	24590-HLW-U0D-W16T-00001
Low Pressure (in.-w.g)	-6.7	1000	hours	24590-HLW-U0D-W16T-00001
Radiation Dose Rate (mR/hr)	0.5	0 Note 4	hours	24590-HLW-U0D-W16T-00001
Submergence	☒ Yes ☐ No 1.58'	1000	hours	24590-HLW-U0D-W16T-00001
Chemical/Spray Exposure	☐ Yes ☒ No	N/A	hours	N/A See Note 12
Additional DBE Information	Note 2 for pressure units			

DBE Chemical Exposure Details	
DBE Chemical Types / Concentrations	N/A

Electrical Interfaces Supporting the Safety Function	
Power Supply Voltage (VAC, VDC)	480 VAC
Power Supply Frequency (Hz)	60 Hz
Power Connection Method	3 Wired, solidly ground
I/O Signals to/from Equipment	BUYER
I/O Connection Method	BUYER

Mechanical Interfaces	
Mounting Configuration (orientation)	Horizontal
Mounting Method (bolts, welds, etc.)	Welded to embeds, See 24590-HLW-DD-S13T-00067
Auxiliary Devices	Lifting Lugs

Equipment Seismic Qualification (ESQ)

Parameter	Title	Reference/Document Number	Version / Revision	Remarks
WTP Seismic Design Specification	ENGINEERING SPECIFICATION FOR STRUCTURAL DESIGN LOADS FOR SEISMIC CATEGORY III & IV EQUIPMENT AND TANKS	24590-WTP-3PS-FB01-T0001	4	
Specified Seismic Load	ENGINEERING SPECIFICATION FOR	24590-WTP-3PS-FB01-	4	

EQUIPMENT QUALIFICATION DATASHEET (EQD)

Equipment Seismic Qualification (ESQ)				
Parameter	**Title**	**Reference/Document Number**	**Version / Revision**	**Remarks**
Parameters	STRUCTURAL DESIGN LOADS FOR SEISMIC CATEGORY III & IV EQUIPMENT AND TANKS	T0001		

Equipment Qualification Notes and Additional Information

1. General Notes:

a) For thermal aging, the high normal temperature shall be assumed to subsist for 40 years less the duration of the high abnormal temperature. For any lesser qualified life, the normal and abnormal condition durations shall be assigned proportionally. The abnormal temperature is stated to subsist for a certain number of hours per year. It shall be taken to subsist for this number of hours for each year of the qualified life.

b) The ability to provide the safety function at the low normal temperature, the low abnormal temperature or the low DBE temperature (whichever be the lowest) shall be established by test, analysis, or operating experience. The thermal aging at these respective low temperatures will be conservatively covered by the thermal aging per item a) above. Therefore, no duration is assigned for the low temperatures.

c) The ability to provide the safety function at the extremes of the normal and abnormal humidity conditions, taking into consideration the high and the low normal and high and low abnormal, shall be established by test, analysis, or operating experience. No duration is assigned for the normal and abnormal humidity conditions.

d) If the performance of the safety function of the equipment is affected by ambient pressure, the ability to provide the safety function at the extremes of the normal and abnormal pressure conditions, taking into consideration the high and the low normal and the high and low abnormal pressures, shall be established by test, analysis, or operating experience. No duration is assigned to the normal and abnormal pressure conditions.

e) (1) If the abnormal radiation dose rate is the same as the normal radiation dose rate, the normal radiation dose rate shall be assumed to subsist for 40 years, or any lesser qualified life, and the duration of the abnormal radiation dose rate is "0."

(2) If the abnormal radiation dose rate is higher than the normal radiation dose rate, the abnormal radiation dose rate shall be assumed to subsist for 40 years, or any lesser qualified life, and the duration of the normal radiation dose rate is "0."

f) The DBE conditions shall be taken to subsist for the stated number of hours following the qualified life of the equipment.

g) Spray due to fire sprinkler actuation shall be taken to occur once over the entire qualified life duration for a period of 2 hours, even if the qualified life is a period less than 40 years. If spray qualification is provided for DBE conditions (whether for water or chemical spray), then separate qualification for the fire sprinkler spray need not be provided.

h) The values stated in this EQD are the ambients and do not include the thermodynamic and radiation conditions imposed by the process fluids, self-heating, etc. The data pertaining to process fluid and service induced parameters are to be taken into account where significant, such as in thermal aging analyses. These data can be obtained from the equipment data sheets or the Equipment Specification.

i) Equipment that is to be installed in inaccessible locations must be qualified to a 40-year life without the need for maintenance or replacement.

2. Data to be provided by SELLER through the submittal process as required on the G-321-E form.

3. Where pressure is given in inches of water column (in-WC) in the source document, it is generally assumed that this is in reference to atmospheric pressure and is, therefore, equivalent to inches of water gage (in-WG).

4. Normal, abnormal, and DBE dose rates are the same; therefore, abnormal & DBE doses do not add to total integrated dose based on normal dose rate over 40 years.

5. Wet Fire Sprinkler system in room. Room wetted 2 hrs in 40 years via inadvertent actuation of fire sprinklers.

6. Fire Water spray is only spray present in the room.

7. Spray = Yes, if wet sprinklers or other liquid lines are present.

8. Vendor to determine impacts of submergence.

9. Environmental data provided is for room conditions only (does not reflect process conditions).

10. BUYER to assign doc number after receipt of seller submittal.

11. Deleted

12. Ammonia and nitric acid are listed in the HLW Room environment Data sheet, 24590-HLW-U0D-W16T-00001, Rev 1. The determination that the DBE exposure is N/A is as follows:

- The nitric acid pipe line identified in CCN 156336 is not located in room H-A123.
- Confinement of ammonia is achieved by designation of ammonia lines in HLW as SS and Seismic Category, SC-III. Additionally, circumferential breaks and leakage cracks need not be postulated in lines less than or equal to 1 inch nominal pipe size, per 24590-WTP-GPG-SANA-002, Section 3.3.3, Pipe Failures.

R11334856

ISSUED BY
RPP-WTP PDC

RIVER PROTECTION PROJECT – WASTE TREATMENT PLANT

ENGINEERING SPECIFICATION

FOR

HLW Thermal Catalytic Oxidizers/Reducers

Content applicable to ALARA? ☒ **Yes** ☐ **No**

ADR No.
24590-HLW-ADR-HV-02-002

Rev
1

Quality Level
CM
DOE Contract No. DE-AC27-01RV14136

NOTE: Contents of this document are Dangerous Waste Permit affecting.

REV	DATE	BY	CHECK	REVIEW	E&NS	QA	DPEM
1	2/25/11	Tim Henry	Dennis Rickettson	Grant Goolsby		N/A	J. Schneider ~~Janet Roth~~ DJR 2/25/11
0	5/4/09	Darryl Nelson	Dennis Rickettson	Grant Goolsby	Dick Carlstrom	N/A	Janet Roth

SPECIFICATION No.
24590-HLW-3PS-MBTV-T0002

Rev
1

Revision History

Revision	Reason for Revision
0	This new specification changed from Q to enhanced CM and deals with the TCO and Ammonia /Air Injection units for HLW only. Section 6, Tests and Inspections, is a complete re-write. Section 10, Submittals, is clarified by removing requirements which are redundant to the daughter specifications and adding detail to some requirements. Issued for Purchase
1	This revision incorporates the following: • TCN's 24590-CM-MRA-MBT0-00002-T0002, T0 004, T0007, & T0009, ~~SDDR #24590-WTP-SDDR-MS-10-00004, SDDR #24590-WTP-SDDR-MS-10-00115~~ TH 3/11/11 • Revise sample tap size in paragraph 3.7.1.8 to match with suppliers P&ID submittal number 24590-CM-POA-MBT0-00002-04-00003 • Corrected typing error in section 3.7.1.9 • Incorporate by reference SDDR# 24590-WTP-SDDR-MS-10-00004, 24590-WTP-SDDR-MS-10-00115 Issued for Purchase

Notice

Please note that source, special nuclear, and byproduct materials, as defined in the Atomic Energy Act of 1954 (AEA), are regulated at the US Department of Energy (DOE) facilities exclusively by DOE acting pursuant to its AEA authority. DOE asserts, that pursuant to the AEA, it has sole and exclusive responsibility and authority to regulate source, special nuclear, and byproduct materials at DOE-owned nuclear facilities. Information contained herein on radionuclides is provided for process description purposes only.

Contents

Notice 1
1 Scope 4
1.1 Project Description and Location 4
1.2 Equipment, Material, and Services Required 4
1.3 Work by Others 6
1.4 Acronyms 6
1.5 Definitions 8
1.6 Safety/Quality Classifications 9
2 Applicable Documents 9
2.1 General 9
2.2 Industry Standards 9
2.3 Reference Documents/Drawings 11
3 Design Requirements 12
3.1 General 12
3.2 Offgas Treatment System Description 15
3.3 Basic Function 15
3.4 Performance 16
3.5 Design Conditions 17
3.6 Environmental Conditions 17
3.7 Mechanical Requirements 18
3.8 Loading 22
3.9 Electrical Requirements 22
3.10 Instrumentation and Control Requirements 23
3.11 Lifting Requirements 24
3.12 Thermal Analysis Requirements 24
3.13 Thermal Catalytic Oxidizer/Reducer Design Analysis Requirements 25
3.14 Accessibility and Maintenance 26
4 Materials 26
4.1 General 26
4.2 Construction 27
4.3 Prohibited Materials 27
4.4 Insulation 28
5 Fabrication 28
5.1 General 28

5.2 Welding 29
5.3 Painting 30
5.4 Assembly 30
6 Tests and Inspections 30
6.1 General 30
6.2 Personnel Qualifications 31
6.3 Non-Destructive Examinations 31
6.4 Shop Tests 32
6.5 Site Tests 35
7 Preparation for Shipment 35
7.1 General 35
7.2 Tagging 35
7.3 Documentation 36
8 Quality Assurance 36
8.1 General Requirements 36
8.2 Quality (CM) Requirements 36
8.3 Supplier Deviation 37
9 Configuration Management 37
10 Documentation and Submittals 37
10.1 General 37
10.2 Submittals 37
11 References 40

Figures

Deleted

Attachments

1. 24590-WTP-SRD-ESH-01-001-02, pages C.34-1 thru C.34-5, tailoring of ANSI-K61.1
2. 24590-WTP-SRD-ESH-01-001-02, pages C.26-1 thru C.26-7, tailoring of ASME-B31.3
3. 24590-WTP-SRD-ESH-01-001-02, page C.9-1, tailoring of AISC M016
4. HLW Skid Interface Connections
5. Connection For Non-Routine Sample Extraction
6. Connection For Sample Extraction-Permanent Typical
7. Certificate of Analysis for BASF Catalysts, LLC (VOCat 300S)

1 Scope

1.1 Project Description and Location

The Hanford Tank Waste Treatment and Immobilization Plant (WTP) is a complex of waste treatment facilities where the Department of Energy's (DOE) Hanford site tank waste will be pretreated and immobilized into stable glass form via vitrification. The WTP Contractor will design, build, and start up the WTP pretreatment and vitrification facilities for the US Department of Energy's (DOE) Office of River Protection (ORP). The waste treatment facilities will pre-treat and immobilize the Low-Activity Waste (LAW) and High-Level Waste (HLW) currently stored in underground storage tanks at the Hanford Site.

The Hanford Site occupies an area of about 560 square miles and is located along the Columbia River, north of the city of Richland. The WTP Facility will be constructed at the East End of the 200 East Area of the Hanford Site. Benton, Franklin, and Grant counties surround the Hanford Site.

1.2 Equipment, Material, and Services Required

This specification provides the requirements for the design, analysis, materials selection, appurtenances selection, project management, quality control, quality assurance, inspection, fabrication, testing and labeling of 2 ea. HLW Thermal Catalytic Oxidizers/Reducers and the associated Ammonia/Air Dilution Skids.

The scope of work for the SELLER includes all work specifically defined in this specification and its addenda and attachments. Work shall include, but is not limited to, the following:

1.2.1 NOT USED

1.2.2 High Level Waste: 2 ea. Thermal Catalytic Oxidizer/Reducer Skids, 24590-HLW-MX-HOP-SKID-00005 and 24590-HLW-MX-HOP-SKID-00007. 2 ea. Ammonia/Air Dilution Skids, 24590-HLW-MX-HOP-SKID-00006 and 24590-HLW-MX-HOP-SKID-00008. 2 ea. Heater Control Panels, HOP-PNL-00004 and HOP-PNL-00008 (if vendor panel is provided). Components are Seismic Category III as denoted on the MDS in Section 2 of the MR.

1.2.3 NOT USED

1.2.4 Provide an analysis from a Thermal Catalytic Oxidizer/Reducer expert of the design to determine expected catalyst changeout frequency.

1.2.5 NOT USED

1.2.6 NOT USED

1.2.7 NOT USED

1.2.8 NOT USED

1.2.9 NOT USED

1.2.10 NOT USED

1.2.11 Provide certified material test reports, welding procedures, insulation installation procedures, surface preparation and coating procedures, testing procedures, testing results, quality assurance procedures, quality assurance inspection results, and all other procedures and documentation required per this specification and its addenda and attachments.

1.2.12 Provide transportation, storage, and installation instructions for the Thermal Catalytic Oxidizers/Reducers and the Ammonia/Air Dilution Skids per manufacturer's recommendation and this specification.

1.2.13 Provide packaging and prepare the Thermal Catalytic Oxidizer/Reducers Skids, the Ammonia/Air Dilution Skids, control panels, shim pack, gaskets, special tools (if required), and catalyst bed for shipment to the WTP site. Packaging shall be sufficient to allow outdoor storage for a period of up to 12 months at the WTP site, without BUYER action except routine inspection. Environmental conditions for storage are found in Section 3.6 of this specification. SELLER shall provide specific guidelines for storage beyond 12 months.

1.2.14 Provide special tools required for installation and maintenance.

1.2.15 Provide Material Safety Data Sheets (MSDSs) for the catalyst cartridges and any other potentially hazardous chemicals or materials which will be delivered to the BUYER.

1.2.16 Provide a thermal analysis of the Thermal Catalytic Oxidizer/Reducer, and support frame in accordance with the requirements of this specification and Mechanical Data Sheets (MDSs) in Section 2 of the Material Requisition (MR). Select insulation material (i.e. calcium silicate, refractory brick, mineral wool, etc.) to meet thermal requirements of this specification.

1.2.17 Provide detailed installation procedure for insulation, complete with design drawings and insulation map.

1.2.18 Provide a seismic analysis of the Thermal Catalytic Oxidizer/Reducer and ammonia supply/dilution skids in accordance with the requirements of this specification.

1.2.19 Provide shop painting of carbon steel surfaces.

1.2.20 Provide an equipment reliability assessment for all major components and subcomponents including expected catalyst life of the Thermal Catalytic Oxidizers/Reducers. The definition of components and sub-components is at SELLER's discretion.

1.2.21 Provide junction boxes to accommodate wiring to remote-mounted SELLER control panel. SELLER shall provide wiring schedule, diagrams, and documentation to facilitate installation of wiring from equipment to remote control panel.

1.2.22 Provide ASME Sec VIII and B31.3 analysis of the Thermal Catalytic Oxidizer/Reducer and the associated Ammonia/Air Dilution supply piping in accordance with the requirements of this specification.

1.3 Work by Others

Specific activities and materials excluded from the scope of this specification include:

1.3.1 Shipping to WTP jobsite

1.3.2 Material unloading and storage at jobsite

1.3.3 Installation labor

1.3.4 Foundation embeds

1.3.5 NOT USED

1.3.6 NOT USED

1.3.7 Ammonia vapor supply to skid connection

1.3.8 Electric power supply

1.3.9 Off skid external wiring

1.3.10 External connection to BUYER's instrumentation and controls

1.3.11 Installation of supplier provided removable / replaceable insulation for flanges, manholes, doors, access openings, as required.

1.3.12 ABB Control System Components, software and programming for normal (PCJ) and safety control (PPJ) systems

1.3.13 Containment Tent, portable HEPA filter exhauster

1.3.14 Grounding cable

1.4 Acronyms

AISC	American Institute of Steel Construction
ANSI	American National Standards Institute
ASME	American Society of Mechanical Engineers
ASTM	American Society for Testing and Materials
AWS	American Welding Society
CGD	Commercial Grade Dedication
CM	Commercial

COA	Certificate of Analysis
DBE	Design Basis Event
DRE	Destruction and Removal Efficiency
FAT	Factory Acceptance Test
FF	Foundation® Fieldbus
FMEA	Failure Mode and Effects Analysis
HEPA	High Efficiency Particulate Air
HLW	High Level Waste
ISA	Instrument Service Air
LAW	Low Activity Waste
MACT	Maximum Achievable Control Technology
MDS	Mechanical Data Sheet
MR	Material Requisition
MSDS	Material Safety Data Sheet
MTBF	Mean-Time Between Failure
NACE	National Association of Corrosion Engineers
NDE	Non-Destructive Examination
NEMA	National Electrical Manufacturers Association
NFPA	National Fire Protection Association
NOx	Nitrogen Oxides
P&ID	Piping and Instrumentation Diagram
PCJ	Process Control System
PIP	Process Industry Practices
PMI	Positive Material Identification
PPE	Personnel Protection Equipment
PPJ	Programmable Protection System

PQR	Procedure Qualification Record
PSA	Process Service Air
QAP	Quality Assurance Program
Q	Quality
QL	Quality Level
RPP	River Protection Project
SC	Safety Class
SCO	Selective Catalytic Oxidation
SCR	Selective Catalytic Reduction
SDDR	Supplier Deviation Disposition Request
SS	Safety Significant
SSCs	Systems, Structures, and Components
SVOCs	Semi-Volatile Organic Compounds
TCO	Thermal Catalytic Oxidizer
UL	Underwriters Laboratories, Inc.
VOCs	Volatile Organic Compounds
VSL	Vitreous State Laboratory
WAC	Washington Administrative Code
WPS	Welding Procedure Specification
WTP	Hanford Tank Waste Treatment and Immobilization Plant

1.5 Definitions

The equipment covered by this specification will be used in the WTP, where the following definitions are applicable:

Quality Level (QL): The quality level identifies the quality requirements to be applied to the equipment. The identified quality levels are Q (Quality), and CM (Commercial). Quality requirements are specifically defined on the associated MDSs and supplier Quality Assurance Program (QAP) requirements data sheets.

Seismic Category (SC): Specific requirements for each seismic category are defined in reference documents listed in Sections 2.3.12 and 2.3.26 of this specification.

Thermal Catalytic Oxidizer/Reducer Expert: One who has extensive knowledge regarding the characteristics and application of Thermal Catalytic Oxidizers/Reducers. Must have a minimum of five (5) years experience.

1.6 Safety/Quality Classifications

1.6.1 Refer to the MDS in Section 2 of the MR for Safety Class, Quality Level and Seismic Category classifications related to the HLW Thermal Catalytic Oxidizers/Reducers and the Ammonia/Air Dilution skids.

1.6.2 NOT USED

2 Applicable Documents

2.1 General

2.1.1 Work shall be done in accordance with the referenced codes, standards, and documents listed below, which are an integral part of this specification.

2.1.2 When specific chapters, sections, parts, or paragraphs are listed following a code, industry standard, or reference document, only those chapters, sections, parts, or paragraphs of the document are applicable and shall be applied. For the codes and standards listed in Section 2, the specific revision or effective date identified shall be followed. If a date or revision is not identified, the latest issue, including addenda, at the time of quotation, shall apply.

2.2 Industry Standards

2.2.1 AISC M016 - 9th Edition, *Manual of Steel Construction, Allowable Stress Design*, as tailored in Appendix C of 24590-WTP-SRD-ESH-01-001-02, *Safety Requirements Document Vol. II* (see Attachment 3)

2.2.2 NOT USED

2.2.3 NOT USED

2.2.4 NOT USED

2.2.5 NOT USED

2.2.6 ASME B31.3 – 1996, *Process Piping Code*, as tailored in Appendix C of 24590-WTP-SRD-ESH-01-001-02, *Safety Requirements Document Vol. II* (see Attachment 2)

2.2.7 ASME B & PVC, Section VIII-200, Division 1: *Rules for Construction of Pressure Vessels*

2.2.8 NOT USED

2.2.9 ASME Y14.100-2004, *Engineering Drawing Practices*

2.2.10 ASTM – E84-08, *Surface Burning Characteristics of Building Materials*

2.2.11 ASTM - A240-07, *Heat-Resisting Chromium and Chromium-Nickel Stainless Steel Plate, Sheet, and Strip for Pressure Vessels*

2.2.12 AWS D1.6-1999, *Structural Welding Code, Stainless Steel*

2.2.13 NOT USED

2.2.14 NEMA 250-2003, *Enclosures for Electrical Equipment (1,000 Volts Maximum)*

2.2.15 NOT USED

2.2.16 NFPA 70 – 1999, *National Electrical Code*

2.2.17 NFPA 497-2007, *Recommended Practice for Classification of Hazardous Locations for Electrical Installations in Chemical Process Areas*

2.2.18 NOT USED

2.2.19 UL 467-2007, *Standard for Safety Grounding and Bonding Equipment*

2.2.20 UL 508-2007, *Standard for Safety Electric Industrial Control Equipment*

2.2.21 UL 508A-2007, *Standard for Industrial Control Panels*

2.2.22 ANSI K61.1 - 1999, *Safety Requirements for the Storage and Handling of Anhydrous Ammonia*, as tailored in Appendix C of 24590-WTP-SRD-ESH-01-001-02, *Safety Requirements Document Vol. II* (see Attachment 1)

2.2.23 IEEE 384-1992, *Standard Criteria for Independence of Class 1E Equipment and Circuits*, as tailored in referenced specification 24590-WTP-3PS-EKP0-T0001

2.2.24 NOT USED

2.2.25 NOT USED

2.2.26 NOT USED

2.2.27 NOT USED

2.2.28 NOT USED

2.2.29 NOT USED

2.2.30 NOT USED

2.2.31 AWS D1.1-2000, *Structural Welding Code – Steel*

2.2.32 29 CFR 1910, *Occupational Safety and Health Standards for General Industry*

2.3 Reference Documents/Drawings

2.3.1 24590-WTP-3PS-AFPS-T0001, *Engineering Specification for Shop Applied Special Protective Coating for Steel Items and Equipment*

2.3.2 24590-WTP-3PS-G000-T0001, *General Specification for Supplier Quality Assurance Program Requirements*

2.3.3 24590-WTP-3PS-G000-T0002, *General Specification for Positive Material Identification (PMI)*

2.3.4 24590-WTP-3PS-G000-T0003, *Engineering Specification for Packaging, Handling and Storage Requirements*

2.3.5 24590-WTP-3PS-JQ07-T0001, *Engineering Specification for Instrumentation for Package Systems*

2.3.6 24590-WTP-3PS-EKP0-T0001, *Engineering Specification for Electrical Requirements for Packaged Equipment*

2.3.7 NOT USED

2.3.8 24590-WTP-3PS-NN00-T0001, *Engineering Specification for Thermal Insulation for Mechanical Systems*

2.3.9 24590-WTP-3PS-PS02-T0001, *Engineering Specification for Shop Fabrication of Piping*

2.3.10 24590-WTP-3PS-SS00-T0001, *Engineering Specification for Welding of Carbon Structural Steel*

2.3.11 24590-WTP-3PS-SS00-T0002, *General Specification for Welding of Structural Stainless Steel and Welding of Structural Carbon Steel to Structural Stainless Steel*

2.3.12 24590-WTP-3PS-FB01-T0001, *Engineering Specification for Structural Design Loads for Seismic Category III & IV Equipment and Tanks*

2.3.13 24590-WTP-3PS-NWP0-T0001, *Engineering Specification for General Welding and NDE Requirements for Supplier Fabricated Piping*

2.3.14 NOT USED

2.3.15 24590-WTP-3PS-MV00-T0001, *Engineering Specification for Pressure Vessel Design and Fabrication*

2.3.16 24590-WTP-3PS-MVB2-T0001, *Engineering Specification for Welding of Pressure Vessel, Heat Exchangers and Boilers*

2.3.17 NOT USED

2.3.18 NOT USED

2.3.19 NOT USED

2.3.20 NOT USED

2.3.21 NOT USED

2.3.22 NOT USED

2.3.23 VSL-08R1390-1 *Small Scale Melter Testing for Allyl Alcohol Method Verification*

2.3.24 NOT USED

2.3.25 NOT USED

2.3.26 24590-WTP-3PS-MV00-T0002, *Engineering Specification for Seismic Qualification Criteria for Pressure Vessels*

2.3.27 24590-WTP-LIST-CON-08-0001, *Restricted Materials List WTP Safety Assurance*

2.3.28 24590-WTP-3PS-JQ06-T0005, *Environmental Qualification of Control and Electrical Systems and Components*

2.3.29 24590-WTP-3PS-G000-T0015, *Environmental Qualification of Mechanical Equipment*

3 Design Requirements

3.1 General

3.1.1 The Thermal Catalytic Oxidizers/Reducers and the associated Ammonia/Air Dilution units shall be designed per this specification, the applicable documents listed in Section 2 of this specification, and the MDSs in Section 2 of the MR.

3.1.2 The WTP facility is designed for a minimum service life of 40 years. Structural and pressure boundary components related to the Thermal Catalytic Oxidizer/Reducer and the associated Ammonia/Air Dilution units shall be engineered with a design life of 40 years. Catalyst used in the Thermal Catalytic Oxidizers/Reducers shall have a minimum design life of one year. Other mechanical components shall have a minimum service life of five years with periodic maintenance. Components that cannot be guaranteed for a minimum service life of five years shall be identified in accordance with the following requirements:

- Failure rate or Mean-Time Between Failure (MTBF), whichever is available, and the basis for the rate including specific references to any sources.
- Estimated modes of failure (example, dielectric breakdown, element overheat, etc.). This may be delineated in a Failure Mode and Effects Analysis (FMEA). The method used to perform the FMEA (Example, MIL-STD-1629) and the year shall be specified. All assumptions used to perform the FMEA shall be clearly stated.

- Recommended maintenance and frequency, as applicable.
- Estimated time to perform the recommended maintenance, as applicable.

The data above shall be based on the physical and environmental conditions delineated in this specification and MDSs. Where possible, the SELLER shall compare the figures for the equipment in this specification to similar equipment sold and serviced by the SELLER. The source for all estimates and any underlying assumptions shall be stated. If software is used to perform the FMEA, the SELLER shall specify the software used and the version (example software, Relex, Isogen, Reliasoft, etc.).

3.1.3 Operation of the Thermal Catalytic Oxidizers/Reducers and the associated Ammonia/Air Dilution units shall be continuous for one year. Refer to MDSs in Section 2 of the MR for thermal cyclic conditions.

3.1.4 The thermal and seismic analyses to be provided per this specification must verify that the final detailed design of the Thermal Catalytic Oxidizers/Reducers and the associated Ammonia/Air Dilution units meet the requirements set forth in this specification and its addenda and attachments.

3.1.5 The maximum pressure drops across the Thermal Catalytic Oxidizers/Reducers shall be in accordance with the requirements of the MDSs.

3.1.6 The following requirements shall be met:

- Pressure boundary shall be designed in accordance with the requirements of ASME B&PVC, Section VIII, Div. 1 and BUYER specification 24590-WTP-3PS-MV00-T0001, *Engineering Specification for Pressure Vessel Design and Fabrication*. Code stamp is not required

- Non-Destructive Examination (NDE) requirements for the pressure boundary shall be in accordance with BUYER specification 24590-WTP-3PS-MV00-T0001, *Engineering Specification for Pressure Vessel Design and Fabrication*, Commercial Grade (CM) Vessels

- Seismic analysis shall be per BUYER specification 24590-WTP-3PS-MV00-T0002, *Engineering Specification for Seismic qualification Criteria for Pressure Vessels*

- The structure supporting the pressure boundary shall be designed per BUYER specification 24590-WTP-3PS-MV00-T0002, Section 7.2.2, *Engineering Specification for Seismic Qualification Criteria for Pressure Vessels*

3.1.7 Penetrations in the pressure boundary (i.e. access doors, sample ports, etc.) shall be designed and reinforced in accordance with the requirements of ASME B&PVC, Section VIII, Div. 1, and BUYER specification 24590-WTP-3PS-MV00-T0001, *Engineering Specification for Pressure Vessel Design and Fabrication*. In addition, access doors shall be designed for ease of operation by one person.

3.1.8 If determined necessary by thermal analysis, SELLER shall design the Thermal Catalytic Oxidizers/Reducers to be externally insulated so the external surface temperature does not exceed 140°F. Insulation shall meet applicable requirements of BUYER specification

24590-WTP-3PS-NN00-T0001 *Engineering Specification for Thermal Insulation for Mechanical Systems.*

3.1.9 Internal bracing shall be minimized. Where internal bracing is required, bracing members of circular cross section are preferred.

3.1.10 NOT USED

3.1.11 NOT USED

3.1.12 The SELLER shall select insulation and design the Thermal Catalytic Oxidizers/Reducers and support frame to prevent the BUYER's concrete foundation from reaching a maximum temperature of 150°F.

3.1.13 SELLER shall design and supply necessary outlet piping for sample nozzles located downstream of the recuperative heat exchanger required for ammonia control. SELLER shall include pipe supports and Tied Expansion joints for both the offgas process inlet and outlet connections. Tied Expansion joints shall be 2 ply or greater.

3.1.14 The following are the Safety Significant functions of the HLW Thermal Catalytic Oxidizer/Reducer and the Ammonia/Air Dilution units. (Note: Only root components are listed below. See P&ID 24590-HLW-M6-HOP-00008 / -20008 for the remaining components):

a) Confinement of Melter Offgas: TCO housing, piping, and appurtenances shall be designed to maintain offgas confinement during normal operation, and during and after a seismic event. Structural failure of internals shall not breach confinement boundary.

b) Confinement of Ammonia: The ammonia supply piping, valves, and appurtenances shall maintain confinement of ammonia during normal operation, and during and after a seismic event.

c) Heater High Temperature Interlock: TE0514(Z), JY0520(Z), TE2514(Z), JY2520(Z). Heater to be shut down at a given high temperature setpoint to prevent an over temperature condition.

d) Low Dilution Air Flow Interlock: YV0504(Z), YV2504(Z), YV0509(Z), YV2509(Z), FT0517(Z), FT2517(Z), FT0518(Z), FT2518(Z). Ammonia supply to be shut off at a given low dilution air flow setpoint.

e) NOT USED

f) Low SCR Temp Interlock: TE0336(Z), TE2336(Z). Ammonia supply to be shut off at a given low SCR temperature setpoint.

g) NOT USED

h) NOT USED

i) NOT USED

3.1.15 NOT USED

3.2 Offgas Treatment System Description

Offgas is generated from the vitrification of radioactive waste in Joule heated ceramic melters.

3.2.1 NOT USED

3.2.2 HLW Thermal Catalytic Oxidizer/Selective Catalytic Reduction Units:

The feed to the HLW Thermal Catalytic Oxidizer/Reducer is primarily melter offgas that has been treated by a Submerged Bed Scrubber (SBS), Wet Electrostatic Precipitator (WESP), High Efficiency Mist Eliminator (HEME), HEPA Filters, Activated Carbon Bed Adsorber, and Silver Mordenite column.

3.3 Basic Function

Each Thermal Catalytic Oxidizer/Reducer unit shall consist of four primary components, a recuperative heat exchanger, electric heater, VOC selective catalytic oxidation (SCO) bed, and NO_X selective catalytic reduction (SCR) bed. The rating of each component shall be determined by the SELLER to meet the performance requirements specified in Section 3.4 of this specification. SELLER shall also include ammonia dilution and mixing appurtenances necessary to meet performance requirements of this specification.

3.3.1 Recuperative Heat Exchanger

The recuperative heat exchanger is primarily employed to recover heat from the SCR hot exhaust gas for the Thermal Catalytic Oxidation/Reducer unit. The heat exchanger shall cool down the hot SCR exhaust gas and heat the incoming offgas.

3.3.2 Electric Heater

The electric heater is downstream of the recuperative heat exchanger and is employed to heat the offgas feed to the final desired oxidation and reduction temperatures. After startup, the electric heater shall function as a trim control to raise the offgas temperature to the required oxidizing temperature. Required oxidizing and reduction temperatures shall be per performance criteria specified in Section 3.4 of this specification.

3.3.3 Oxidation Catalyst

The SCO, containing oxidation catalyst, is downstream of the Electric Heater and will oxidize volatile and semi-volatile organic compounds creating water and carbon dioxide. The residence time and number of catalyst beds shall be as specified in Section 3.4 of this specification.

3.3.4 NO_X Selective Catalytic Reduction Unit

The SCR, containing reduction catalyst, is downstream of the Oxidation Catalyst and shall use ammonia injection to reduce the NO_X to Nitrogen, Oxygen, and water through catalytic reaction with ammonia.

3.3.5 Ammonia Dilution System

The BUYER will supply ammonia gas to the HLW SCRs. SELLER shall specify dilution air flow rates and pressures if required for the Ammonia/Air Dilution system. SELLER shall supply necessary equipment required to meet performance requirements.

3.4 Performance

3.4.1 Refer to the Thermal Catalytic Oxidizers/Reducers MDSs for design data and gas stream properties.

3.4.2 The organic Destruction and Removal Efficiency (DRE) performance shall be based on inlet loadings specified in the MDSs.

3.4.3 The Thermal Catalytic Oxidizers/Reducers shall meet the DRE for Volatile Organic Compounds (VOCs) and Semi-Volatile Organic Compounds (SVOCs) as required in the MDSs as well as residence time and minimum oxidizing temperatures specified.

3.4.4 The NOx SCR unit shall meet the reduction efficiency at less than the specified ammonia slip concentration required in the MDSs.

3.4.5 Detection limits used to verify the Thermal Catalytic Oxidizers/Reducers guaranteed performance shall be based on BUYER information (MDS General Note 9).

3.4.6 SELLER shall provide curves plotting efficiency versus inlet operating temperature for the Thermal Catalytic Oxidizer and Selective Catalytic Reducer catalysts.

3.4.7 SELLER shall provide ammonia slip curves for SCR performance.

3.4.8 NOT USED

3.4.9 NOT USED

3.4.10 The ammonia slip exiting the HLW systems shall be specified by the SELLER to meet the NOx reduction efficiencies specified in Section 3.4.4 of this specification.

3.4.11 BUYER's residence time, specified in the MDSs, is the minimum for VOC and SVOC destruction and therefore shall be used by SELLER if it exceeds the SELLER's calculated required residence time.

3.4.12 As specified in the MDSs, concentrations of certain chemical compounds are subject to large step increases and spikes. The SELLER's calculation shall account for these increases and spikes.

3.4.13 SELLER shall identify if additional NOx analyzers are required outside the boundaries of the SELLER's equipment to meet the specified NO_X reduction efficiency and ammonia slip MDS requirements. SELLER shall obtain BUYER's approval for additional NO_X analyzers.

3.5 Design Conditions

3.5.1 Refer to the Thermal Catalytic Oxidizers/Reducers and the associated Ammonia/Air Dilution MDSs in Section 2 of the MR.

3.5.2 NOT USED

3.5.3 Shim plates will be placed on the BUYERS foundation embed plates for leveling the HLW TCO skids and the HLW TCO ammonia skids. The SELLER shall provide the shim plates and the design detailing how the shims are welded to the BUYERS embed plates and how the equipment is connected to the shim plates.

The embed plate design location and elevation for HLW TCO skids and ammonia skids is shown on drawing 24590-HLW-DD-S13T-00067. The design elevation for the top of the embed plates is 0 feet - 0 inches, in plant elevation. The existing embed elevations vary from plate to plate. Some embed plates are on design elevation, some embed plates are 1/8 inch low and some embeds are 1/4 inch low. To account for embed elevations and waviness of the concrete floor the bottom elevation for the HLW TCO skids and the HLW TCO ammonia skids shall be set at + 0 feet, +1/2 inch in plant elevation.

The BUYERS existing embed plates for the HLW TCO skids and HLW TCO ammonia skids are coated carbon steel plates, stock code: EBPNS01CH, shown on drawing 24590-PTF-DD-S13T-00201. The carbon steel embed plates are coated with one layer of inorganic zinc primer. When attachments are welded to the existing embed plates, WTP site welding procedures require inorganic zinc primer to be removed within 2- 4 inches of the weld area. Only carbon steel can be welded to the carbon steel embed plates where the inorganic zinc primer has been removed. It is acceptable to weld a carbon steel skid frame or stainless steel skid frame to the top of the carbon shim welded to the BUYERS embed.

SELLER shall provide shims specified below for the HLW TCO skids and HLW TCO ammonia skids. The shims are generic and can be used under any skid frame as required.

All shim material shall be carbon steel, ASTM A572, grade 50, bare steel, no coating required. Shim thickness is nominal.

(13) 1/2 inch thick shims (this quantity includes 2 spare shims)
(24) 5/8 inch thick shims (this quantity includes 4 spare shims)
(3) 3/4 inch thick shims (this quantity includes 2 spare shims)

3.5.4 NOT USED

3.6 Environmental Conditions

3.6.1 The Thermal Catalytic Oxidizer/Reducer Skids and Ammonia/Air Dilution Skids will be located indoors. Refer to MDSs for specific room environmental design conditions.

3.6.2 Thermal Catalytic Oxidizers/Reducers and components, except catalysts, and the Ammonia/Air Dilution Skids may be stored outdoors prior to installation at ambient extreme temperatures ranging from minus 23°F dry-bulb to 113°F dry-bulb and a relative humidity of 0 to 100%.

3.6.3 Refer to Sections 3.7, 3.9 and 3.10 of this engineering specification for enclosure, instrumentation and electrical requirements and related environmental qualification requirements.

3.6.4 Safety Significant instrumentation that is required to meet environmental qualification shall be qualified in accordance with engineering specification 24590-WTP-3PS-JQ06-T0005, *Engineering Specification for Environmental Qualification of Control and Electrical Systems and Components.*

3.7 Mechanical Requirements

3.7.1 General

3.7.1.1 Due to access restrictions for installation, the Thermal Catalytic Oxidizer/Reducer units shall be fabricated in such a manner that will allow delivery in three to five sections that comply with the bounding dimensions specified in MDSs. Each section of the Thermal Catalytic Oxidizer/Reducer shall be skid mounted.

3.7.1.2 The catalyst bed shall be designed for manual removal and replacement. The catalyst bed shall be designed to meet service life requirements outlined in Section 3.1.2 of this specification. The weight of a catalyst module shall not exceed 50 pounds for lifting manually. BUYER prefers side access for replacing the catalysts. If weights exceed 50 pounds, lifting beams or rigs shall be designed and supplied by the SELLER.

3.7.1.3 SELLER shall provide transitions for connection to BUYER's piping and gas analyzer instrumentation. All flanges required for connection to BUYER's piping and gas analyzers shall have raised face flanges. See Attachment 4 (HLW Skid Interface Connections). See also Attachments 5 and 6 (Connection for Non-Routine Sample Extraction and Connection for Sample Extraction - Permanent Typical, respectively) for non-routine and permanent analyzer connection details.

3.7.1.4 SELLER shall provide TCO drain lines. Drain lines shall be welded to the housing at low points. Penetrations by drains shall be arranged and individually sealed so that catalysis beds cannot be bypassed. Drain lines shall be piped to skid edge and flanged.

3.7.1.5 NOT USED

3.7.1.6 SELLER shall design and supply recuperative heat exchanger outlet piping as specified in the MDSs. Pipe fabrication and supports shall be designed in accordance with ASME B31.3 and BUYER specification 24590-WTP-3PS-PS02-T0001 *Shop Fabrication of Piping*, and be included in the SELLER's scope of supply. SELLER shall include pipe supports and tied expansion joints for both offgas process inlet and outlet connections.

3.7.1.7 Mechanical components required to meet the Safety Significant functions of containment of melter offgas shall be designed and fabricated to meet environmental qualifications in accordance with engineering specification 24590-WTP-3PS-G000-T0015, *Engineering Specification for Environmental Qualification of Mechanical Equipment.*

3.7.1.8 A containment tent or series of containments tents will be erected by the BUYER to control the work area for catalyst removal and replacement after permanent installation of the TCO units. The BUYER will supply and set up a portable HEPA filtered exhauster for containment tent ventilation with discharge port monitoring. The TCO unit will be ventilated using permanently installed process fans. Prior to opening the catalyst access doors on the TCO unit, the TCO unit air will be sampled using an up stream, 1/4 inch pre-installed sample tap. The air sample will be used to determine the level of airborne radioactive material inside the TCO unit. After the air samples are taken and deemed acceptable, opening the catalyst access doors will take place inside the containment tent once stable air flow conditions are established.

The SELLER shall supply the following for each TCO unit:

- One 3/4 inch air sample tap per TCO unit. Include one 3/4 inch ball valve. The sample tap shall extend 12 inches inside the TCO unit. The accessible end of the 3/4 inch ball valve shall include a cap. There shall be at least 3 inches of clearance, for tightening bolts, between the insulating jacketing and the underside of the flange.

Catalyst removal / installation:

- The catalyst bed (s) shall be designed for manual removal and replacement without entering the TCO unit for contact maintenance. It is acceptable for hands and arms to break the plane of the catalyst access door to reach inside the TCO to operate jack bolts with hand tools or use tools with extended handles to remove /replace catalyst modules. It is acceptable to split the movable catalyst frame to minimize the weight of the frame being moved for catalyst module removal / replacement. Pulling the Catalyst module forward to unsnap the tongue and groove connection is not desirable. A jack bolt system that applies pressure to the movable frame to hold the catalyst modules in place is desired.

3.7.1.9 To facilitate process troubleshooting and to obtain additional data during testing and operations, the SELLER shall supply the following for each TCO unit:

- One thermowell between each of the VOC catalyst beds to be provided to take temperature readings during non-routine evolutions. Thermowells shall be located to minimize flow disturbance and not interfere with the manipulation of the catalyst access doors. The location shall consider optimum accessibility. However, it is acceptable to locate the thermowell on the top of the TCO.

- One sample port between each of the VOC catalyst beds to be used to measure offgas concentrations during non-routine evolutions. Sample ports shall be located to minimize flow disturbance and not interfere with the manipulation of the catalyst access doors. The location shall consider optimum accessibility. However, it is acceptable to locate the sample ports on the top of the TCO. Include ball valve, blind flange, gaskets and bolts for each sample port. See Attachment 5 (Connection for Non-Routine Sample Extraction) for temporary connection details.

3.7.2 Recuperative Heat Exchanger

3.7.2.1 Unless otherwise specified, the heat exchanger pressure boundary shall be designed in accordance with ASME B&PVC, Section VIII, Div. 1.

3.7.2.2 The recuperative heat exchangers in the Thermal Catalytic Oxidizer/Reducer units are expected to have a design life of 40 years. If the design life is less than 40 years, the SELLER shall provide provisions for cleaning, maintenance, repair or unit replacement. The SELLER shall submit options for cleaning, maintenance, repair or provisions for total unit replacement of the recuperative heat exchanger. Options to be considered, but not limited to, include:

- Body flanges that allow for total unit replacement,
- Clean out doors for maintenance access,
- Automatic wash systems/particulate collection hoppers, and
- Bolted connection to skid support frame.

3.7.2.3 Heat exchangers shall be designed for full differential pressure, with one side at the design pressure and the other side at atmospheric pressure.

3.7.2.4 NOT USED

3.7.2.5 NOT USED

3.7.2.6 NOT USED

3.7.3 Ammonia/Air Dilution Equipment

3.7.3.1 Design and fabrication of ammonia piping and valves shall be in accordance with ANSI K61.1, ASME B31.3, and BUYER specification 24590-WTP-3PS-PS02-T0001, *Shop Fabrication of Piping.*

3.7.3.2 NOT USED

3.7.3.3 Piping and components required for the HLW Ammonia/Air Dilution shall be located on a separate skid away from the Thermal Catalytic Oxidizer/Reducer skid. Refer to MDS for space envelope and equipment layout requirements. SELLER shall include necessary equipment to meet performance requirements of this specification.

3.7.3.4 NOT USED

3.7.3.5 NOT USED

3.7.3.6 NOT USED

3.7.3.7 NOT USED

3.7.3.8 NOT USED

3.7.3.9 NOT USED

3.7.3.10 NOT USED

3.7.3.11 NOT USED

3.7.3.12 NOT USED

3.7.3.13 NOT USED

3.7.3.14 NOT USED

3.7.3.15 NOT USED

3.7.3.16 NOT USED

3.7.3.17 NOT USED

3.7.3.18 NOT USED

3.8 Loading

3.8.1 The Thermal Catalytic Oxidizers/Reducers (24590-HLW-MX-HOP-SKID-00005/7) and the associated Ammonia/Air Dilution assemblies shall be self-supporting, capable of carrying the static loads of components and the stress imposed during shipment, installation, and operation. See Section 2.3.26.

3.8.2 The Thermal Catalytic Oxidizer/Reducer and the associated Ammonia/Air Dilution skids shall be designed in accordance with the requirements of specification 24590-WTP-3PS-FB01-T0001, *Structural Design Loads for Seismic Category III & IV Equipment and Tanks.*

3.8.3 The SELLER shall provide a seismic analysis in accordance with Section 3.8.2 of this specification. The SELLER shall provide the documented results of the seismic analysis in report form to the BUYER.

3.8.4 The Thermal Catalytic Oxidizer/Reducer units shall be designed in accordance with the nozzle load requirements as specified in the MDSs in Section 2 of the MR.

3.9 Electrical Requirements

3.9.1 Electrical components and appurtenances furnished with the Thermal Catalytic Oxidizer/Reducer and the associated Ammonia/Air Dilution units shall conform to the requirements of specification 24590WTP-3PS-EKP0-T0001, *Electrical Requirements for Packaged Equipment*. Electrical components shall also meet applicable sections of NFPA 70, and requirements outlined in NFPA 497.

3.9.2 Electric heaters shall be of the element type and mounted on removable flanged plates for ease of maintenance. BUYER will supply a 480V 3-wire wye grounded power circuit. If SELLER's supplied heaters are rated for a lower voltage, SELLER shall supply the necessary components to step the electricity down to the necessary voltage.

3.9.3 Electrical enclosures shall be NEMA 4X rated.

3.9.4 The Thermal Catalytic Oxidizer/Reducer control panel components shall be UL 508 listed and certified. Control panels as a whole shall be UL 508A labeled.

3.9.5 Safety Significant electrical systems/components are required to meet environmental qualification and shall be qualified in accordance with engineering specification 24590-WTP-3PS-JQ06-T0005, *Engineering Specification for Environmental Qualification of Control and Electrical Systems and Components.*

3.9.6 NOT USED

3.9.7 SELLER shall provide a grounding lug or boss, in accordance with UL 467, on the equipment housing or frame to facilitate attachment of grounding cable by the BUYER.

3.9.8 SELLER shall provide total electric load for each Thermal Catalytic Oxidizer/Reducer.

3.10 Instrumentation and Control Requirements

3.10.1 Instrumentation and controls furnished with the Thermal Catalytic Oxidizer/Reducer and the associated Ammonia/Air Dilution units shall meet the requirements of engineering specification 24590-WTP-3PS-JQ07-T0001,Rev. 2, *Instrumentation for Package Systems*. BUYER shall provide the appropriate ABB control system components (i.e. I/O modules, power supplies) to the SELLER for fabrication into the SELLER's heater control panel as described in Section 3.4.2.1.1 of 24590-WTP-3PS-JQ07-T0001, Rev. 2. SELLER shall provide non-ABB manufactured equipment (fiber optic converters, fiber optic patch cables and plates, terminals, circuit breaker, wiring, etc.) and panel fabrication.

3.10.2 SELLER shall design the heater control panel to utilize the ABB control system equipment and provide a panel arrangement drawing with Bill of Material identifying all parts to be provided by the BUYER. SELLER shall provide an I/O list on the panel arrangement drawing for all instruments. Reference BUYER's P&IDs in Section 2 of the MR for additional information regarding instrument locations and types.

3.10.3 SELLER shall provide control narrative, logic drawings, termination drawings, and related items as specified in 24590-WTP-3PS-JQ07-T0001, *Instrumentation for Package Systems* for normal (PCJ) and safety control system (PPJ) operation. BUYER shall provide programming for normal operation (PCJ) via software included with BUYER supplied ABB components, and for safety operation via BUYER's safety control system (PPJ), according to SELLER's specification of the monitoring and control requirements. BUYER shall provide controller, software, and attend and support the factory test of the equipment at the SELLER's facility.

3.10.4 NOT USED

3.10.5 In-line instruments shall be wired or tubed to the skid edge. Tubing shall terminate with a bulkhead connection. Wiring shall terminate in a junction box.

3.10.6 NOT USED

3.10.7 NOT USED

3.10.8 NOT USED

3.10.9 NOT USED

3.10.10 NOT USED

3.10.11 NOT USED

3.10.12 NOT USED

3.10.13 NOT USED

3.10.14 Safety Significant instrumentation is required to meet environmental qualification and shall be qualified in accordance with engineering specification 24590-WTP-3PS-JQ06-T0005, *Engineering Specification for Environmental Qualification of Control and Electrical Systems and Components.*

3.11 Lifting Requirements

3.11.1 Lifting lugs shall be installed on the Thermal Catalytic Oxidizers/Reducers and Ammonia/Air Dilution skid packages for balanced lifting and handling. SELLER shall identify the weight and center of gravity of each package. All lifting points shall be designed in accordance with the requirements of BUYER specification 24590-WTP-3PS-G000-T0003, *General Specification for Packaging, Handling, and Storage Requirements.*

3.11.2 Lifting eyes or lugs shall be certified to be suitable for the safe, balanced lifting and handling of the equipment without distortion or damage to the components.

3.11.3 All lifting attachments shall have either a safety factor of three (3), based on material ultimate strength, or five (5), based on the material yield strength, whichever is more conservative. The lifting points and center of gravity shall have a label clearly identifying its safe working load.

3.11.4 Lifting lugs must accept standard commercial lifting equipment. Chain blocks or braiding shall not be permitted.

3.11.5 The lifting lugs for the packages must be accessible from the top, without removal of components or covers.

3.11.6 NOT USED

3.11.7 SELLER to provide calculations for the lift lug design.

3.12 Thermal Analysis Requirements

3.12.1 Method of thermal analysis shall be proposed by the SELLER.

3.12.2 Refer to MDS for thermal analysis technical information and heat loss requirements (i.e. thermal conductivity values, room temperatures, etc.).

3.12.3 The thermal analysis shall include the effects of stresses resulting from potential variations in temperatures due to startup, normal operation, shutdowns, and thermal cycling of the

Thermal Catalytic Oxidizer/Reducer. Analysis shall show that the Thermal Catalytic Oxidizers/Reducers are adequate for the design life specified in Section 3.1.2 of this specification. Analysis shall also establish design temperature of the TCOs.

3.12.4 The thermal analysis shall include thermal expansion of the Thermal Catalytic Oxidizers/Reducers and resulting nozzle loadings in X, Y, and Z planes with deflections at normal operating conditions and design conditions.

3.12.5 NOT USED

3.12.6 The thermal analysis shall determine the thickness and extent of insulation required on the sides, ends, top and bottom of the Thermal Catalytic Oxidizers/Reducers to ensure that the insulation jacket temperature and all exterior uninsulated portions with potential for personnel exposure, do not exceed 140 °F at maximum design temperature.

3.12.7 The thermal analysis shall determine the thickness and extent of insulation required on the bottom of the Thermal Catalytic Oxidizers/Reducers so that the temperature of the concrete does not exceed 150 °F.

3.12.8 The SELLER shall provide the documented results of the thermal analysis in report form to the BUYER. The thermal analysis report shall provide a complete thermal analysis of the Thermal Catalytic Oxidizers/Reducers and shall include 3-D graphical results of models and all calculations performed, as applicable to the analysis approach chosen.

3.12.9 All assumptions shall be plainly identified and data presented (including their uncertainty) with precise logic.

3.12.10 The final thermal analysis report shall convey information to several disciplines, many of whom may be less familiar with the general subject than the authors. Care shall be taken to use simple statements and expressions and to make statements as concise as possible. If highly technical terms are necessary, they shall be adequately explained and defined.

3.13 Thermal Catalytic Oxidizer/Reducer Design Analysis Requirements

3.13.1 The SELLER shall conduct and submit Thermal Catalytic Oxidizer/Reducer design analyses for the HLW units. The design analysis of the Thermal Catalytic Oxidizers/Reducers shall be conducted by a Thermal Catalytic Oxidizer/Reducer expert to determine the expected catalyst changeout frequency for the final Thermal Catalytic Oxidizer/Reducer design. SELLER shall provide personnel qualifications to the BUYER for review.

3.13.2 Analysis shall be conducted considering operation of the Thermal Catalytic Oxidizers/Reducers at design conditions outlined in this specification and MDSs.

3.13.3 Analysis shall determine expected catalyst changeout frequency based on the gas composition and load information specified in the MDSs in Section 2 of the MR.

3.13.4 The design analysis for expected catalyst changeout shall assume that the offgas flow through the Thermal Catalytic Oxidizers/Reducers may vary as much as ±10% from the design flowrate specified in the MDSs in Section 2 of the MR.

3.13.5 The SELLER shall provide the documented results of the Thermal Catalytic Oxidizer/Reducer analysis with any graphical results, as applicable, in report form to the BUYER prior to fabrication.

3.14 Accessibility and Maintenance

3.14.1 BUYER's layout allows for necessary access and space requirements to facilitate maintenance during normal plant operation or scheduled shutdown.

3.14.2 Supplier's recommended accessibility and maintenance requirements for each piece of equipment shall be included in the SELLER's design and shown on layout drawings. Side access for replacement of the catalyst and related gaskets is required.

3.14.3 NOT USED

3.14.4 SELLER shall provide instructions and frequency of maintenance including lubrication, rotation, heating, and any other type of preventative maintenance that will preserve the equipment until the time it is put into operation, including:

- Up to 12 months outdoor storage prior to installation
- Outdoor preservation maintenance and inspection schedule
- Indoor (installed) but not operating preservation maintenance and inspection schedule
- Operating preservation maintenance and inspection schedule

3.14.5 Frequency of inspection and maintenance intervals during operation shall be in accordance with equipment SELLER's recommendations.

3.14.6 Equipment, instrumentation, and electrical components that are six feet over from ground level and require routine maintenance shall be provided with permanent work platforms with fixed ladders/stairs to perform maintenance.

3.14.7 Maintenance platforms and ladders, if applicable per 3.14.6, shall be designed to meet the requirements set forth in 29 CFR 1910, Occupational Safety and Health Standards for General Industry and AISC 9th Edition.

3.14.8 The maintenance platforms, if applicable per 3.14.6, shall be attached without welding after the equipment is installed in the HLW facility.

4 Materials

4.1 General

4.1.1 SELLER shall comply with specification 24590-WTP-3PS-G000-T0002, *Positive Material Identification (PMI)*.

4.2 Construction

4.2.1 Materials of construction shall have properties suitable for the service conditions defined in the MDSs.

4.2.2 The ASME and/or ASTM material numbers and grades shall be identified and a "Manufacturer's Material Certificate of Compliance" shall be provided for the housing, ducts, weld filler metal, and support framing integral to the Thermal Catalytic Oxidizer/Reducer and the associated Ammonia/Air Dilution assemblies. Material designations shall be indicated on the fabrication drawings and in the material lists.

4.2.3 Thermal Catalytic Oxidizer/Reducer and the associated Ammonia/Air Dilution skids shall be fabricated from structural steel shapes and plates properly reinforced to be self-supporting, capable of carrying the static loads of components and the stresses imposed during shipment, installation, and operation.

4.2.4 Thermal Catalytic Oxidizer/Reducer and the associated Ammonia/Air Dilution housings and outlet piping shall be fabricated from materials specified in the MDSs in Section 2 of the MR.

4.2.5 NOT USED

4.2.6 Where the BUYER has not specified material types, the SELLER shall select materials giving consideration to the design life of the equipment, compatibility with adjacent materials, compatibility with the process materials and conditions, environmental conditions, and coating requirements.

4.3 Prohibited Materials

4.3.1 As applicable, mercury, zinc, cadmium, or other low melting point materials and halogens shall not be used in direct contact with stainless steel. This prohibition also applies to use of tools, fixtures, paints, coatings and sealing compounds, and any other equipment or materials used by the SELLER in handling, assembly and storage of stainless steel parts or components.

4.3.2 Asbestos shall not be used in any component of the Thermal Catalytic Oxidizers/Reducers, the associated Ammonia/Air Dilution units, and appurtenances.

4.3.3 The prohibited materials list excludes materials that might be used for bearings, brazed joints, or instruments.

4.3.4 The equipment provided to the BUYER shall not contain any of the materials listed in 24590-WTP-LIST-CON-08-0001, *Restricted Materials List WTP Safety Assurance* unless BUYER (Safety Assurance) approval is obtained.

4.4 Insulation

4.4.1 The SELLER shall provide detailed insulation installation procedures complete with drawings showing methods and details for applying and securing insulation. Installation procedures and drawings shall include details related to applying and securing metal jacketing (if externally insulated), to the Thermal Catalytic Oxidizers/Reducers. The insulation procedures shall be in accordance with BUYER specification 24590-WTP-3PS-NN00-T0001 *Thermal Insulation for Mechanical Systems*, and this specification. The insulation installation procedures shall be reviewed by the BUYER prior to commencement of work to install insulation on the Thermal Catalytic Oxidizers/Reducers.

4.4.2 SELLER shall provide shop fabricated and installed insulation to the maximum extent possible, in an effort to minimize field insulation.

4.4.3 NOT USED

4.4.4 NOT USED

4.4.5 Provide for removable/replaceable insulation on flanges, manholes, doors, and access openings.

4.4.6 DELETED

4.4.7 DELETED

4.4.8 DELETED

4.4.9 DELETED

4.4.10 NOT USED

4.4.11 NOT USED

4.4.12 NOT USED

4.4.13 NOT USED

4.4.14 DELETED

5 Fabrication

5.1 General

5.1.1 Fabrication of the thermal catalytic oxidizer/reducer units shall be in accordance with the requirements of 24590-WTP-3PS-MV00-T0001, *Engineering Specification for Pressure Vessel Design and Fabrication.*

5.1.2 Fabrication of piping shall meet the requirements of BUYER specifications 24590-WTP-3PS-PS02-T0001 Shop Fabrication of Piping, 24590-WTP-3PS-NWP0-T0001 *General Welding and NDE Requirements for Supplier Fabricated Piping*, and ASME B31.3.

5.1.3 NOT USED

5.1.4 NOT USED

5.1.5 All stainless steel metal working, grinding, cutting, machining and welding shall use tools and consumables dedicated and segregated from all others to prevent cross contamination. A dedicated work area for tools, equipment storage, parts storage and raw materials must be established to control contamination. Welding consumables for stainless steel welding must be segregated from other consumables.

5.2 Welding

5.2.1 Design and fabrication of the TCO pressure boundary shall be in accordance with specification 24590-WTP-3PS-MV00-T0001, *Pressure Vessel Design and Fabrication*

5.2.2 Welding of the TCO pressure boundary shall be in accordance with specification 24590-WTP-3PS-MVB2-T0001, *Welding of Pressure Vessels, Heat Exchangers and Boilers.*

5.2.3 Fabrication of TCO piping shall be in accordance with 24590-WTP-3PS-PS02-T0001, *Shop Fabrication of Piping.*

5.2.4 Welding and NDE of TCO piping shall be in accordance with specification 24590-WTP-3PS-NWP0-T0001, *General Welding and NDE Requirements For Supplier Fabricated Piping.*

5.2.5 Procedures for welding, control and storage of filler material, nondestructive examination (NDE) and postweld heat treatment (PWHT) are not required for commodities obtained from a sub-supplier which are not part of the external pressure boundary. Commodities which are not part of the external pressure boundary including the following, but are not limited to the: recuperative heat exchanger, electric heater, catalyst modules. Although procedures for welding of the recuperative heat exchanger are not required to meet basic requirements as stated above, weld procedures for the recuperative heat exchanger shall be submitted to the buyer for review. WTP has decided to go above the basic requirements by reviewing the recuperative weld procedures.

5.2.6 NOT USED

5.2.7 NOT USED

5.2.8 NOT USED

5.2.9 NOT USED

5.2.10 Welding of carbon structural steel shall be in accordance with AWS D1.1 and specification 24590-WTP-3PS-SS00-T0001, *Welding of Carbon Structural Steel.*

5.2.11 Welding of structural stainless steel shall be in accordance with AWS D1.6 and BUYER specification 24590-WTP-3PS-SS00-T0002, *Welding of Structural Stainless Steel and Welding of Structural Carbon Steel to Structural Stainless Steel.*

5.2.12 NOT USED

5.2.13 NOT USED

5.3 Painting

5.3.1 Shop painting shall be in accordance with 24590-WTP-3PS-AFPS-T0001, Shop Applied Special Protective Coating for Steel Items and Equipment.

5.3.2 NOT USED

5.4 Assembly

5.4.1 NOT USED

5.4.2 NOT USED

5.4.3 NOT USED

5.4.4 The Thermal Catalytic Oxidizers/Reducers and the associated Ammonia/Air Dilution units shall have edges that are both smooth and not sharp to the touch.

5.4.5 NOT USED

5.4.6 NOT USED

6 Tests and Inspections

6.1 General

6.1.1 The SELLER shall provide all instruments, cables, and facilities necessary to perform any shop tests, the Factory Acceptance Tests (FAT) and NDE.

6.1.2 SELLER shall provide the necessary hardware, fan, pre heater, power, controls, temporary insulation, piping, and ductwork for the HLW TCOs and test equipment to set up and operate the HLW TCOs at the design conditions specified in the HLW MDS at the supplier's shop. The HLW TCOs shall operate at a negative pressure so the test shall include a temporary fan(s) setup which meets the HLW MDS design conditions and a temporary pre-heater to simulate the hot gas from the melters (as specified in the MDS).

6.1.3 SELLER shall provide the necessary hardware, power, controls and test equipment to set up and operate the Instrument Service Air (ISA) supply on the Ammonia/Air Dilution Skid at the conditions prescribed in the MDS.

6.1.4 Any non-conforming work shall be redone by the SELLER at SELLER's cost.

6.2 Personnel Qualifications

6.2.1 NDE personnel performing NDE shall work in accordance with the following BUYER specifications:

- 24590-WTP-3PS-MV00-T0001, *Pressure Vessel Design and Fabrication,*
- 24590-WTP-3PS-MVB2-T0001, *Engineering Specification for Welding of Pressure Vessel, Heat Exchangers and Boilers,*
- 24590-WTP-3PS-SS00-T0001, *Engineering Specification for the Welding of Carbon* Structural *Steel,*
- 24590-WTP-3PS-SS00-T0002, *Engineering Specification for the Welding of Structural Stainless Steel and Welding of Structural Carbon Steel to Structural Stainless Steel,*
- 24590-WTP-3PS-NWP0-T0001, *Engineering Specification for General Welding and NDE Requirements for Supplier Fabricated Piping*, and
- 24590-WTP-3PS-PS02-T0001, *Engineering Specification for Shop Fabrication of Piping.*

6.3 Non-Destructive Examinations

6.3.1 NDE shall be in accordance with the following BUYER specifications:

- 24590-WTP-3PS-MV00-T0001, *Pressure Vessel Design and Fabrication,*
- 24590-WTP-3PS-MVB2-T0001, *Engineering Specification for Welding of Pressure Vessel, Heat Exchangers and Boilers,*
- 24590-WTP-3PS-SS00-T0001, *Engineering Specification for the Welding of Carbon* Structural *Steel,*
- 24590-WTP-3PS-SS00-T0002, *Engineering Specification for the Welding of Structural Stainless Steel and Welding of Structural Carbon Steel to Structural Stainless Steel,*
- 24590-WTP-3PS-NWP0-T0001, *Engineering Specification for General Welding and NDE Requirements for Supplier Fabricated Piping*, and
- 24590-WTP-3PS-PS02-T0001, *Engineering Specification for Shop Fabrication of Piping.*

6.3.2 NDE procedures shall be submitted to BUYER for review prior to use.

6.3.3 Submittal of exposed radiographs is required. Original set of exposed radiographic film must be sent, along with technique and reader sheets. Film must be packaged in such a manner as to preclude moisture and handling damage.

6.4 Shop Tests

6.4.1 SELLER shall perform the FAT that demonstrates the function of the equipment. These tests shall be conducted in accordance with Section 6 of 24590-WTP-3PS-JQ07-T0001 Rev. 2, Section 6 of 24590-WTP-3PS-EKP0-T0001, Rev. 3, and additional requirements identified within this specification.

6.4.2 BUYER's Supplier Quality (SQ) representative shall witness the FAT, and BUYER's Engineering shall be present for the Functional Testing portion of the FAT.

6.4.3 Prior to notification by SELLER that a unit is ready for the BUYER to witness the Functional Test portion of the FAT, SELLER shall perform all other FAT mechanical and electrical inspections to ensure completed equipment is functioning and ready for the Functional Test. Any deficiencies shall be corrected prior to the Functional Test.

6.4.4 SELLER shall have unit up and ready for Functional Testing prior to the BUYER's team arriving on the day the Functional Test is to commence.

6.4.5 SELLER shall submit FAT inspection plan and Functional Test procedure for BUYER review prior to use by the SELLER. SELLER shall provide a signed copy of completed FAT inspection report (information only) to BUYER at time of notification that SELLER is ready for the Functional Test.

6.4.6 SELLER shall submit a report of FAT results.

6.4.7 Functional Test procedures shall be prepared by the SELLER in accordance with 24590-WTP-3PS-JQ07-T0001, Rev. 2, Section 11.3.2. As stated in 24590-WTP-3PS-JQ07-T0001, Rev. 2, the scope of functional testing shall be agreed to between the BUYER and SELLER via review of the proposed test procedure.

6.4.8 The following is a list of preliminary BUYER expectations for the HLW TCO Functional Test. This list is subject to change by the BUYER during review of proposed test procedure. Changes to these expectations, agreed to during review of the proposed test procedure, do not need to be reflected in a revision to this specification.

a. Test setup shall simulate the melter operating conditions per the mechanical data sheet.

i. Pressure testing shall be performed in accordance with required testing specified in ASME B31.3-1996 or ASME BPV Code Section VIII Division I as applicable. In addition to these codes required pressure tests, additional testing shall be performed to further demonstrate the pressure boundary integrity of equipment which will be subject to internal pressure above atmospheric during normal equipment operation. Record on FAT datasheet.

ii. Sensitive Leak Testing shall be performed on piping in accordance with ASME B31.3-1996 Section 345.8. Record on FAT datasheet.

iii. Bubble Testing shall be performed on equipment designed and fabricated in accordance with ASME BPV Code Section VIII, Division I in accordance with ASME BPV Code Section V, Article 10. Record on FAT datasheet.

iv. Obtain unit pressure drop measurements at ambient conditions and at heatup intervals specified by the BUYER. Record on FAT datasheet.

v. Obtain catalyst bed seal measurements at ambient conditions and at heatup interval specified by the BUYER. Record on FAT datasheet.

vi. Preheat the incoming air, prior to HOP-HTR-00001 and HOP-HTR-00007, to simulate the hot offgas from the melter.

vii. Provide power and temporary controls for heater HOP-HTR-00001 and HOP-HTR-00007.

viii. Run the HLW TCO for 24 hours under this setup, prior to test objective testing.

b. Test objectives:

i. Verify the TCO heater, HOP-HTR-00001 and HOP-HTR-00007 provides the required heat to maintain temperature within the operating range as specified on the MDS.

ii. Verify the melter maximum flowrate of approximately 3092 ACFM can be achieved. The flowrate provided here is for information only and subject to change. Refer to the MDS for the actual flowrate.

iii. Verify the actual differential pressure drop is less than the allowable differential pressure drop of 12 inch water gauge. The pressure drop provided here is for information and subject to change. Refer to the MDS for the actual pressure drop. Record on FAT datasheet.

iv. Verify the TCO outlet temperature at TE 0336 or TE 2336 is less than 426 °F. The temperature provided here is for information and subject to change. Refer to the MDS for the actual temperature. Record on FAT datasheet.

v. NOT USED

vi. Verify no leaks at the access doors under operating conditions. Ultrasonic leak detectors like AccuTrak VPE-1000, SON-TECTOR 123 or equal are acceptable for leak testing around the access door gaskets.

vii. Verify unit pressure drop is within acceptable limits as stated in BUYER-approved FAT. Record on FAT datasheet.

viii. Verify the floor temperature under the TCO is less than 150°F. Record on FAT datasheet.

c. After the TCO unit has cooled, verify unit pressure drop is within acceptable limits as stated in BUYER-approved FAT. Record on FAT datasheet.

d. After the TCO unit has cooled, verify no deformation or degradation to the housing and internal components. Document findings on FAT datasheet.

e. After the TCO unit has cooled, obtain catalyst bed seal measurements and compare to measurements taken in Section 6.4.8.a.ii. Record on FAT datasheet.

f. After the TCO unit has cooled, demonstrate the catalyst can be removed and replaced with out a person breaking the plane of the access doors. It is acceptable if arms break the access door plane during catalyst removal or installation.

   i. Supplier to submit a catalyst installation and removal procedure.

6.4.9 The following is a list of expectations for the Ammonia Skid Functional Test. This list is subject to change by the BUYER during review of proposed test procedure. Changes to these expectations, agreed to during review of the proposed test procedure, do not need to be reflected in a revision to this specification.

a. Test set up:

   i. Pressure testing shall be performed in accordance with required testing specified in ASME B31.3-1996 or ASME BPV Code Section VIII Division I as applicable. In addition to these codes required pressure tests, additional testing shall be performed to further demonstrate the pressure boundary integrity of equipment which will be subject to internal pressure above atmospheric during normal equipment operation. Record on FAT datasheet.

   ii. Sensitive Leak Testing shall be performed on piping in accordance with ASME B31.3-1996 Section 345.8. Record on FAT datasheet.

   iii. It is acceptable to use temporary air and controls to open and close valves on the Ammonia/Air Dilution Skid.

b. The SELLER shall provide the following air source:

   i. NOT USED

   ii. Dry, oil and dust-free Instrument Service Air (ISA) at 90-150 psig and with a dew point value of -40°F at 100 psig based on ISA 7.0.01.

c. Test objectives:

   i. Satisfactory results for 6.4.9.a criterion stated above.

   ii. Actuated valves are full-cycled a minimum of 3 times and flow instrument loops respond per the design.

6.4.10 NOT USED

6.4.11 NOT USED

6.4.12 NOT USED

6.4.13 SELLER provided lifting equipment such as, but not limited to, spreader beams, strong backs, and yokes, shall be tested in accordance with Section 9.4 of 24590-WTP-3PS-G000-T0003.

6.4.14 All overhead lifting points shall be proof tested. Test and examination certificates/documentation shall be provided to the BUYER for review. Lifts shall be conducted in accordance with a BUYER reviewed handling procedure.

6.4.15 Deleted

6.4.16 After the proof tests, the lifting points shall be inspected:

6.4.17 The welds on fabricated lifting lugs shall be dye penetrant tested. Acceptance criteria shall be from the prevailing weld design code or standard.

6.4.18 Lift points shall be inspected for visual permanent plastic deformation of the material that may invalidate the design analyses for the lift point.

6.5 Site Tests

6.5.1 The BUYER startup personnel shall perform acceptance tests after initial installation to confirm the Thermal Catalytic Oxidizers/Reducers and the associated Ammonia/Air Dilution units meet the performance requirements specified in Section 3.4 of this specification.

7 Preparation for Shipment

7.1 General

The Thermal Catalytic Oxidizers/Reducers, catalysts, assemblies and the associated Ammonia/Air Dilution units shall be packaged, handled, and stored in accordance with BUYER specification 24590-WTP-3PS-G000-T0003, *Engineering Specification for Packaging, Handling, and Storage Requirements*.

7.2 Tagging

7.2.1 A stainless steel nameplate shall be attached in a visible location to each Thermal Catalytic Oxidizer/Reducer and Ammonia/Air Dilution unit showing the manufacturer's name, shop location, date of manufacture, serial number, equipment rating, equipment tag numbers, weight of assembly and purchase order number. Instruments shall be tagged per 24590-WTP-3PS-JQ07-T0001, Rev. 2, Section 8.

7.2.2 Electrical/Control panels shall be tagged with component identification numbers per 24590-WTP-3PS-JQ07-T0001, Rev. 2, Section 3.6.8.

7.2.3 Mechanical subcomponents (valves, strainers, expansion/flex joints, filters, mixing chambers, etc) shall have component identification number engraved on a 1/16" minimum thick stainless steel tag with ¼" minimum character height, securely attached with 1/16" minimum diameter aircraft cable and ferrules.

7.2.4 Component identification numbers shall be as shown on BUYER's P&IDs or MDSs attached to the MR, or will be provided via BUYER mark up of SELLER submitted drawings.

7.3 Documentation

SELLER shall ensure that appropriate documentation is prepared and signed by the appropriate person(s), if required. The shipping documentation shall accurately reflect specific traceability to the items being shipped. Drawings (wiring diagrams), showing external terminations for BUYER use to connect to SELLER provided instrumentation, shall be marked with the BUYER's instrument tag numbers.

8 Quality Assurance

8.1 General Requirements

8.1.1 The SELLER's QAP Requirements are included in BUYER specification 24590-WTP-3PS-G000-T0001, *General Specification for Supplier Quality Assurance Program Requirements*.

8.1.2 SELLER's QAP Manual shall be submitted to BUYER for review in accordance with BUYER specification 24590-WTP-3PS-G000-T0001, *General Specification for Supplier Quality Assurance Program Requirements*.

8.1.3 SELLER's QAP, as a minimum, shall contain the requirements detailed on the CM Datasheet of Quality Assurance Program Requirements, attached to Section 2 of the MR.

8.1.4 For items designated quality level commercial (CM), no additional QA program requirements are mandated by BUYER beyond SELLER's commercial QA program.

8.2 Quality (CM) Requirements

8.2.1 SELLER shall have in place a QAP meeting the requirements of BUYER specification 24590-WTP-3PS-G000-T0001, *General Specification for Supplier Quality Assurance Program Requirements*.

8.2.2 NOT USED

8.2.3 The successful bidder must pass a pre-award survey by the BUYER. SELLER shall demonstrate that its quality program is in compliance with the quality requirements listed in the Supplier Quality Assurance Program Requirements Data Sheet.. The SELLER shall allow the BUYER, its agent, and DOE access to their facility and records pertaining to this purchase order for the purpose of Quality Assurance Audits and Surveillance at mutually agreed times.

8.2.4 SELLER shall submit their QAP and work plan to BUYER for review prior to commencement of work. The plan shall include documents and procedures to implement the work and include a matrix of essential Quality Assurance elements cross referenced with the documents/procedures.

8.2.5 NOT USED

8.2.6 NOT USED

8.2.7 NOT USED

8.3 Supplier Deviation

Each SELLER shall be required to identify and promptly document all deviations from the requirements of the procuring documents. In addition, the supplier shall be required to describe the recommended disposition for BUYER's acceptance based on appropriate analysis. Submittals of request for deviations from lower-tier suppliers shall be through the prime supplier to WTP. SELLER-proposed deviations from procurement documents shall be initiated by use of Supplier Deviation Disposition Request (SDDR) form in Section 2 of the MR.

9 Configuration Management

Equipment and/or components covered by this specification are identified with plant item numbers shown in the MDSs. Each item shall be identified in accordance with Tagging in Section 7.2 of this specification.

10 Documentation and Submittals

10.1 General

SELLER shall submit to BUYER Engineering and Quality Verification documents in the forms and quantities shown in Form G-321-E, *Engineering Document Requirement*, and Form G-321-V, *Quality Verification Document Requirements*, attached to the MR.

10.2 Submittals

The SELLER shall submit the following:

10.2.1 Drawings

Drawings shall be in accordance with ASME Y14.100 and show the following information:

10.2.1.1 The outline dimensions of each Thermal Catalytic Oxidizer/Reducer and Ammonia/Air Dilution units, including outline and detail drawings for each component. These drawings shall reflect the "as-shipped" configuration of the equipment and instrumentation.

10.2.1.2 Details of construction.

10.2.1.3 Mounting dimensions and information required for the design of supports and foundations.

10.2.1.4 Operating weight and center of gravity of each Thermal Catalytic Oxidizer/Reducer and Ammonia/Air Dilution unit.

10.2.1.5 The space required for the removal of components.

10.2.1.6 The location of access doors.

10.2.1.7 Thermal insulation and interface points with BUYER's foundation.

10.2.1.8 NOT USED

10.2.1.9 NOT USED

10.2.1.10 Wiring and schematic diagrams. Diagrams shall include wire gauges and fuse sizes applicable to the supplied units only.

10.2.1.11 The ASTM or equivalent designation for materials.

10.2.1.12 Nozzle locations for connections to BUYER's process and utility piping including electrical and instrumentation connections.

10.2.1.13 Piping and instrumentation diagrams (P&IDs).

10.2.2 Procedures

Procedures shall include but are not limited to:

10.2.2.1 SELLER's shipping preparation and storage procedures.

10.2.2.2 Startup, operation, shutdown and idle procedures/manual.

10.2.2.3 Catalyst changeout procedures.

10.2.2.4 Performance test procedures and acceptance criteria for shop tests.

10.2.2.5 Insulation installation procedures.

10.2.2.6 Surface preparation and coating procedures for components specifically fabricated for the TCOs/SCRs.

10.2.3 Inspection and Test Reports

10.2.3.1 NOT USED

10.2.3.2 NOT USED

10.2.3.3 Performance test reports for shop tests.

10.2.3.4 NOT USED

10.2.3.5 Reliability assessment.

10.2.3.6 NOT USED

10.2.3.7 NOT USED

10.2.4 Calculations

10.2.4.1 Seismic and Thermal analyses/calculations shall be submitted for BUYER's review and permission to proceed. Analyses shall include nozzle loadings and deflections for normal operation and design conditions.

10.2.4.2 NOT USED

10.2.4.3 NOT USED

10.2.5 Manuals

Manuals and instructions shall include:

10.2.5.1 Erection and installation manuals which provide complete, detailed procedures for installing and placing equipment in initial operation. The manuals shall include all erection and installation drawings. Refer to BUYER specification 24590-WTP-3PS-G000-T0003 *General Specification for Packaging, Handling and Storage Requirement*, for additional requirements.

10.2.5.2 Operation, accessibility and maintenance manuals which provide complete, detailed descriptions of components and appurtenances with data sheets showing design, construction and performance data for equipment. Manuals shall include drawings required for operation, maintenance and repair, maintenance requirements, instructions and operational troubleshooting guides.

10.2.5.3 Instruction manuals shall cover items purchased, including materials that the SELLER has obtained from a subcontractor. The SELLER shall obtain such manuals and lists, and submit them to the BUYER.

10.2.5.4 The SELLER shall provide instructions regarding transportation, site storage and preparation, and protection of equipment after installation and prior to operation. Refer to BUYER specification 24590-WTP-3PS-G000-T0003 *General Specification for Packaging, Handling and Storage Requirement*, for additional requirements.

10.2.6 Certificates of Conformance and Acceptance

10.2.6.1 SELLER shall provide Certificates of Conformance demonstrating compliance with all applicable standards, specifications, and drawings.

10.2.6.2 SELLER shall certify lifting eyes or lugs and/or spreader bars are suitable for the safe, balanced lifting, and handling of the equipment.

10.2.6.3 Attachment 7 provides the Certificate of Analysis (COA) for BASF Catalysts, LLC (VOCat 300S) used in Catholic University's Vitreous State Laboratory (VSL) testing. Prior to release for shipment SELLER shall provide the COA demonstrating the performance of the oxidation catalyst is equal to or better than the oxidation catalyst used in the reference VSL testing (Ref. MDS General Note 9) for BUYER's acceptance.

10.2.7 Schedules

Lists and schedules shall include:

10.2.7.1 Schedule of engineering and fabrication.

10.2.7.2 Parts list, and cost for parts and items subject to deterioration and replacement.

10.2.7.3 List of recommended spare parts. The spare parts list shall include names of the original equipment manufacturer with appropriate part numbers.

10.2.8 Materials Certificates/Statistics

10.2.8.1 Material Certificate of Compliance shall be submitted for components of each Thermal Catalytic Oxidizer/Reducer unit and each Ammonia/Air Dilution unit. Certificate shall include certified material test reports of chemical and physical properties for all stress components.

10.2.8.2 Manufacturer's Material Certificate of Compliance with ASME and/or ASTM material numbers and grades shall be provided for the housing, ducts, weld filler metal, and support framing integral to each Thermal Catalytic Oxidizer/Reducer and each Ammonia/Air Dilution assembly.

10.2.8.3 Material Safety Data Sheets (MSDSs).

10.2.9 Data

Data shall include:

10.2.9.1 BUYER's Mechanical Data Sheets, completely filled out by the SELLER, showing all information required to determine that the units are of the design and materials specified herein.

10.2.9.2 All data compiled during FAT testing.

10.2.9.3 NOT USED

10.2.10 NOT USED

11 References

Design changes incorporated by reference:

24590-WTP-SDDR-MS-10-00004

34.0 ANSI K61.1, American National Standard Safety Requirements for the Storage and Handling of Anhydrous Ammonia

Revision: 1999
Sponsoring Organization: Compressed Gas Association, Inc.

WTP Specific Tailoring

The following tailoring of ANSI K61.1 is required for use by the WTP project as an implementing standard for the safety related systems design.

Page 9, Section 5.1 Equipment and systems

Revise Section 5.1 as follows:

Not Applicable

Justification: Section allows the continued use or reinstallation of containers and systems designed and installed under earlier versions of codes and ANSI standards. WTP does not plan on using previously installed or design equipment. Therefore, Section 5.1 of this standard will not be implemented for this project.

Page 19, Section 6.3 Pressure relief devices

Revise Section 6.3.2 as follows:

Not Applicable

Justification: Section specifies relief valve design for underground containers. WTP does not plan to install underground containers. Therefore, Section 6.3.2 of this standard will not be implemented for this project.

Revise Section 6.3.3 as follows:

Not Applicable

Justification: Section specifies manhole design for relief for underground containers. WTP does not plan to install underground containers. Therefore, Section 6.3.3 of this standard will not be implemented for this project.

Page 19, Section 6.4 Installation of storage containers

Revise Section 6.4.4 as follows:

Not Applicable

Justification: Section specifies design requirements for the installation of underground containers. WTP does not plan to install underground containers. Therefore, Section 6.4.4 of this standard will not be implemented for this project.

Revise Section 6.4.5 as follows:

Not Applicable

Justification: Section specifies design requirements for the installation of underground containers. WTP does not plan to install underground containers. Therefore, Section 6.4.5 of this standard will not be implemented for this project.

Revise Section 6.4.7 as follows:

Not Applicable

Justification: Section specifies design requirements for the installation of underground storage systems. WTP does not plan to install underground storage system. Therefore, Section 6.4.7 of this standard will not be implemented for this project.

Revise Section 6.4.8 as follows:

Not Applicable

Justification: Section specifies design requirements for the installation of underground tanks. WTP does not plan to install underground tanks. Therefore, Section 6.4.8 of this standard will not be implemented for this project.

Page 20, Section 6.5 Reinstallation of containers

Revise Section 6.5 as follows:

Not Applicable

Justification: Section specifies requirements for reinstallation of containers. WTP does not plan to use previously used containers. Therefore, Section 6.5 of this standard will not be implemented for this project.

Pages 21-26; Section 7 Refrigerated storage

Revise Section 7 as follows:

Not Applicable

Justification: This section establishes design requirements for system using tanks for the storage of anhydrous ammonia under refrigerated conditions. WTP does not plan on a system using tanks for the storage of anhydrous ammonia under refrigerated conditions. Therefore, Section 7 of this standard will not be implemented for this project.

Pages 26-28; Section 8 Systems mounted on railcar structures (tank cars), other than DOT class 106A, for transportation of ammonia

Revise Section 8 as follows:

Not Applicable

Justification: This section establishes design requirements for tank cars for the rail transportation of ammonia. WTP does not plan to receive anhydrous ammonia by rail car. Therefore, Section 8 of this standard will not be implemented for this project.

Pages 31-32; Section 10 Systems using DOT portable tanks and cylinders

Revise Section 10 as follows:

Not Applicable

Justification: This section establishes requirements for cylinders (less than 1000 pounds), DOT portable tanks and DOT containers. WTP does not plan to receive anhydrous ammonia by container or cylinder. Therefore, Section 10 of this standard will not be implemented for this project.

Pages 32-34; Section 11 Systems mounted on farm wagons (implements of husbandry) for the transportation of ammonia

Revise Section 11 as follows:

Not Applicable

Justification: This section establishes requirements for equipment mounted on farm wagons for the transportation of ammonia. WTP does not plan to use farm wagons for the transportation of ammonia. Therefore, Section 11 of this standard will not be implemented for this project.

Pages 34-35; Section 12 Systems mounted on farm wagons (implements of husbandry) for the application of ammonia

Revise Section 12 as follows:

Not Applicable

Justification: This section establishes requirements for equipment mounted on farm wagons for the application of ammonia. WTP does not plan to use farm wagons for the application of ammonia. Therefore, Section 12 of this standard will not be implemented for this project.

Pages 35-37; Section 13 References

The references listed shall be constrained to the approved versions listed in the SRD or approved changes and equivalencies.

The following references shall be excluded:

ANSI/ASHRAE 15, American National Standard Safety Code for Mechanical Refrigeration

ANSI/IIAR 2, American National Standard for Equipment, Design and Installation of Ammonia Mechanical Refrigeration Systems

ANSI/ASME B31.5, American National Standard for Refrigeration Piping

ANSI/SAE J1513, Refrigeration Tube Fittings

API Standard 620, Design and Construction of Large Welded Low-Pressure Storage Tanks

Justification: The above references are for the design of refrigerated storage systems. WTP does not plan to use a refrigerated anhydrous ammonia storage system. Therefore, these references will not be implemented for this project.

The following references shall be excluded:

40 CFR Part 280, Technical standards and corrective action requirements for owners and operators of underground storage tanks (UST)

Justification: The above reference is for underground storage tanks. WTP does not plan to use underground storage tanks for anhydrous ammonia. Therefore, these references will not be implemented for this project.

The following references shall be excluded:

CGA G-7, Guide to the Preparation of Precautionary Labeling and Marking of Compressed Gas Containers

ANSI/CGA V-1, American National Standard Compressed Gas Association Standard for Compressed Gas Cylinder Valve Outlet and Inlet Connections

Justification: The above references are for the use of cylinders and small (less than 1 ton) containers. WTP does not plan to use cylinders or small containers for anhydrous ammonia storage. Therefore, these references will not be implemented for this project.

The following references shall be excluded:

ANSI/ASAE S276, Slow Moving Vehicle Identification Emblem
ANSI/ASAE S338.2, Safety Chain for Towed Equipment

Justification: The above references are for the use of ammonia systems mounted on farm equipment. WTP does not plan to use farm equipment for anhydrous ammonia storage. Therefore, these references will not be implemented for this project.

26.0 ASME B31.3-1996, Process Piping

Revision: 1996
Sponsoring Organization: ASME

WTP Specific Tailoring

The following tailoring of ASME B31.3, *Process Piping*, is required for use by the WTP contractor as an Implementing Standard for: (1) the fabrication and installation of those portions of the C5V ductwork that are being embedded in concrete, (2) the use of ASME B16.9 welding tees in accordance with ASME B31.3-2002. (3) use of vacuum box leak testing, and (4) the ASME B31.3-1998, paragraph 345.2.3(c). allowance for not leak testing closure welds outside of inaccessible areas.

- The tailored sections of ASME B31.3 applicable to embedded ductwork will only be utilized to the extent that it will cover the fabrication, installation, and inspection (and associated testing) of Category D fluid service piping being used as C5 ductwork. Air testing requirements for this ductwork will be compliant with ASME AG-1. Below is a description of those portions of ASME B31.3 that apply to fabrication, installation, and inspection of Category D fluid service piping and the sections of the SRD that they will apply to.
- The tailored sections of ASME B31.3 applicable to welding tees will only be used for ASME B16.9 welding tees. As long as the stress intensification factors from ASME B31.3-2002 are used in the stress analysis for the welding tees, welding tees fabricated to either the 1996 or the 2002 edition of ASME B31.3 can be used. Below is a description of those portions of ASME B31.3. Appendix D. Table D300. that apply to welding tees and the section of the SRD to which they will apply.
- The tailored paragraphs of ASME B31.3 applicable to vacuum box leak testing, in lieu of hydrostatic or pneumatic leak testing, will only be used to leak test full penetration circumferential piping field butt welds inside an inaccessible area (as defined in Appendix H. Section 6.0) out to the first isolation component outside the inaccessible area. Further, if the 100 % volumetric inspection using ultrasonic examination per ASME B31.3 paragraph 344.6. is conducted for welds to be vacuum box tested, then the ultrasonic examination shall be conducted using a method that creates and maintains a reproducible computerized image(s) of the entire weld in the axial and radial direction.
- The tailored paragraphs of ASME B31.3 adopting the provisions of ASME B31.3 (c) - 1998 Addendum paragraph 345.2.3(c) are applicable to all ASME B31.3 piping in all facilities except for closure welds in inaccessible areas.

Piping providing a confinement function in accordance with SRD 4.4-3 will comply with the following sections of ASME B31.3-1996, *Process Piping*. These sections of ASME B31.3 are applicable for embedded ductwork.

Chapter 3. Materials

Chapter 5, Fabrication

Table 341.3.2, Visual acceptance criteria for Category D fluid service piping

Justification: Due to wall thickness requirements of duct embedded in concrete, piping materials are required. ASME B31.3 will apply to materials, fabrication, and inspection standards as appropriate. Testing requirements for nuclear air treatment systems will be consistent with ASME AG-1.

Piping providing a confinement function in accordance with SRD 5.1-2 will comply with the following sections of ASME B31.3-1996, *Process Piping*. These sections of ASME B31.3 are applicable for embedded ductwork.

Chapter 3, Materials

Chapter 5, Fabrication

Table 341.3.2, Visual acceptance criteria for Category D fluid service piping

Justification: Due to wall thickness requirements of duct embedded in concrete, piping materials are required. ASME B31.3 will apply to materials, fabrication, and inspection standards as appropriate. Testing requirements for nuclear air treatment systems will be consistent with ASME AG-1.

Piping providing a confinement function in accordance with SRD 4.2-2 will comply with ASME B31.3-1996, *Process Piping*, with the following modification:

In Table D300, the description of welding tee per ASME B16.9 shall be revised so it is consistent with that shown in Table D300 of ASME B31.3-2002:

Description	Flexibility Factor k	Stress Intensification Factor [Notes (2), (3)] Out-of-Plane, i_o	In-Plane i_i	Flexibility Characteristic, h	Sketch
Welded tee per ASME B16.9 [Notes (2), (4), (6), (11), (13)]	1	$\frac{0.9}{h^{2/3}}$	$3/4\, i_o + 1/4$	$3.1\frac{\overline{T}}{r_2}$	Same as ASME B31.3-1996

This means that for welding tees per ASME B16.9, note 11 in Table D300 is also changed to:

(11) If $r_x \geq 1/8D_b$ and $T_c \geq 1.5\overline{T}$, a flexibility characteristic of $4.4\,\overline{T}/r_2$ may be used.

Justification: The use of a lower flexibility characteristic for welding tees per ASME B.16.9 in accordance with ASME B31.3-2002 will increase both the out-of-plane and in-plane stress intensification factors. The increased stress intensification factors will reduce the allowable out-of-plane and in-plane moments that can be applied to the welding tee and keep the calculated stress below the stresses allowable by ASME B31.3-1996.

Safety piping within the scope of SRD 4.2-2 shall comply with ASME B31.3-1996, Chapter V, Paragraph 345, using the following approach for vacuum box leak testing. Vacuum box leak testing, in lieu of hydrostatic or pneumatic leak testing, may be used to leak test full penetration circumferential piping, field butt welds inside an inaccessible area (as defined in Appendix H, Section 6.0) out to the first isolation component outside the inaccessible area, only under the following conditions:

Vacuum Box Leak Test Method - The vacuum box leak test shall be in accordance with a Bubble Test - Vacuum Box Technique method specified in ASME BPV Code, Section V, Article 10, Appendix II, subject to the requirements listed below:

(a) Sensitivity of the test shall be demonstrated to be not less than 1E-3 atm-ml/sec at 15 psig.

(b) The test pressure shall be a partial vacuum of at least 7 psi below atmosphere, applied to the outside of the weld.

(c) The required partial vacuum shall be maintained for at least 20 sec examination time.

In addition, the following limitations and restrictions shall apply to the application of vacuum box leak testing in lieu of a hydrostatic or a pneumatic leak test:

- Vacuum box leak testing will only be used to leak test circumferential piping field welds inside an inaccessible area (as defined in Appendix H, Section 6.0). This includes any welds in extensions of piping systems contained or originating in accessible areas between the inaccessible area boundary and the first isolation valve or device beyond the inaccessible area boundary;
- It shall only be used for piping field welds where required to avoid damage to components, ensure the safety to construction workers, perform leak tests of field welds where physical limitations prevent hydrostatic or pneumatic leak testing as prescribed in ASME B31.3-1996 paragraph 345.4 and paragraph 345.5 respectively;
- Pipe welds that are to be vacuum box leak tested will be assessed for suitability. The number of welds to be vacuum box leak tested shall be limited to a maximum of three welds between termination points (two termination or closure welds and one intermediate weld) on a given pipe system except where physical limitations prevent examination by hydrostatic or pneumatic leak testing. DOE will be informed of such exceptions, and may at its discretion and within 48 hours of being informed, respond to BNI on the suitability of the use of vacuum box leak testing for such instances. Termination points may be tanks, vessels, valves, etc. (Specifically excluded from the definition of termination points are junctions where the piping changes design class). This could be either the last two closure welds in an inaccessible area or the last closure weld in the inaccessible area and the last closure weld outside the

inaccessible area. In addition, vacuum box leak testing would be permitted for the connection welds between construction modules if this is limited to one module-to-module weld per piping run within the cells. This is in addition to termination welds on the piping run. A module is defined as a pre-leak-tested subassembly containing multiple pipe spools;

- Vacuum box leak testing shall be limited to full penetration girth butt welds, on straight pipe or between straight pipe and pipe components of the same nominal pipe size and same wall thickness on both sides of the weld at the weld location. The following configurations are candidates for vacuum box testing:
  (a) Straight pipe to straight pipe connection butt welds
  (b) Straight pipe to 90° elbow connection butt welds
  (c) Straight pipe to 45° elbow connection butt welds
  (d) Straight pipe to concentric reducer connection butt welds
  (e) Straight pipe to eccentric reducer connection butt welds
  (f) Straight pipe to butt welding tee connection butt welds
  (g) Straight pipe to butt welding reduced outlet tee connection butt welds
  (h) Straight pipe to valve nozzle connection butt welds
  (i) Straight pipe to tank or vessel nozzle connection welds
  (j) Straight pipe to safe-end of a weldolet connection butt welds - full penetration butt welded connection only
  (k) Straight pipe to pipe cap connection butt welds

  Prior to the application of vacuum box testing using any of the candidate configurations on piping butt welds at the WTP, the Contractor must successfully demonstrate to the DOE, for the candidate configuration, that (1) all portions of the weld to be inspected are visible and can be inspected in accordance with the ASME Boiler and Pressure and Vessel Code, Section V, Article 10, Appendix II - 1995; (2) the vacuum box can adequately maintain a partial vacuum of 7 psid; and (3) vacuum box leak testing can be accomplished in the time limits and other requirements established by this procedure. The DOE shall be advised at least 7 days in advance of any demonstration to qualify a new weld configuration so that they can witness the demonstration. The Contractor shall document any demonstration relied upon to justify the use of vacuum box leak testing on a new configuration. Further, vacuum box leak testing shall be conducted with a vacuum box that completely encapsulates the weld, at the test location;
- All welds shall be 100 % volumetrically inspected in accordance with ASME B31.3-1996, paragraphs 344.5 or 344.6. If the 100 % volumetric inspection is conducted using ultrasonic examination per ASME B31.3-1996 paragraph 344.6, then the ultrasonic examination shall be conducted using a method that creates and maintains a reproducible computerized image(s) of the entire weld in the axial and radial direction;
- It shall be limited to welds made using the Orbital welding machines. The only exception is that vacuum leak box testing may be used on manual welds if the 100 % volumetric inspection was conducted by radiography per ASME B31.3-1996 paragraph 344.5;
- The piping systems and or components on both sides of the weld to be vacuum box leak tested shall have been subjected to a hydrostatic leak test in accordance with ASME B31.3-1996

paragraph 345.4, a pneumatic test in accordance with ASME B31.3-1996 paragraph 345.5, a combination pneumatic-hydrostatic leak test in accordance with ASME B31.3-1996 paragraph 345.6, or in the case of components, leak tested in accordance with the Code or Standard applicable to the design of the component;

- At a minimum, a flexibility analysis in accordance with ASME B31.3-1996 paragraphs 319.4.2 (a) and (b) shall be required on any piping systems that contain welds that are to be vacuum leak box tested. In addition, a comprehensive flexibility analysis in accordance with ASME B31.3-1996 paragraphs 319.4.2 (c) and (d) shall be performed on any piping systems that contain welds that are to be vacuum box leak tested when the piping systems have a design temperature greater than or equal to 150 °F;
- For manual welds, the requirements of ASME B31.3-1996 paragraph 344.7.1 (a) through (g) shall be invoked on any weld to be vacuum box leak tested with the exception that the requirement of subparagraph 344.7.1 (e) "... aided by liquid penetrant or magnetic particle examination when specified in the engineering design" shall not be required. For welds made using Orbital welding machines, the requirements of ASME B31.3-1996 paragraph 344.7.1 (a), (b), (c), (d), and (g) shall be invoked. The requirements of 344.7.1 (e) and (f) shall not be required. The implementation of these requirements shall be documented in the weld inspection report;
- Pipe welds and the associated line numbers that are to be vacuum leak box tested shall be identified in advance of the testing. This identification shall be documented in the controlled document Weld List, which must include this information prior to the initiation of any vacuum box leak testing associated with those welds and line numbers. It is understood that the controlled document Weld List may need to be revised and updated periodically through the construction phase of the WTP Project; and
- The following special requirements shall be placed on the training programs used to certify the technicians that will be conducting the vacuum box leak tests:
  1. The BNI Construction Manager shall pre-approve the technician qualifying examination(s) for vacuum box leak testing;
  2. The BNI Construction Manager shall pre-approve the qualifications of each Level III technician preparing or giving the examinations for vacuum box leak testing;
  3. DOE ORP at their discretion shall reserve the right to observe any and/or all practical leak test examinations and review of the results of any and/or all written vacuum box leak test examinations;
  4. The minimum topical content of each Level II examination shall be specified by BNI, and approved by DOE;
  5. The 80 % correct criteria for passing the examination shall apply to each part of the three part examinations that are to be given;
  6. BNI shall provide reasonable assurance that they will take adequate measures to assure the integrity of written examination is maintained; and
  7. There shall be several versions of each examination in use to assure Level II knowledge and ability concerning vacuum box leak testing is confirmed.

Justification: The requirement for the vacuum box leak test sensitivity is consistent with the ASME B31.3 requirement for a sensitive leak test as given in ASME B31.3-1996 paragraph 345.8 and for at least 7 psi vacuum and an examination time of at least 20 seconds. The limitations in using vacuum box leak testing better define when this method can be used. DOE ORP may further change the definition and application of these special vacuum box leak testing criteria based on the Contractor's experience with their use, or the Contractor's request for a change.

Piping system closure welds outside of inaccessible areas (as defined in SRD Appendix H, Section 6.0) shall comply with the requirements of ASME B31.3-1998, subparagraph 345.2.3(c). When ASME B31.3-1998, subparagraph 345.2.3(c) is invoked the following restrictions shall apply:

- It shall not be invoked on any closure welds on piping systems in inaccessible areas as defined in Section 6.0 of Appendix H of the SRD. This includes any welds in extensions of piping systems contained or originating in inaccessible areas, between the inaccessible area boundary and the first isolation valve, or device beyond the inaccessible area boundary;
- It shall only be invoked on full penetration butt welds in straight pipe, full penetration butt welds at the safe-end of an equipment nozzle, or full penetration butt welds at the safe-end of branch connections. [The safe-end is defined as the piping to equipment nozzle connecting weld or the branch connection to branch piping connecting welds.];
- The requirements of ASME B31.3(c) - 1998, subparagraph 345.2.3 (c) shall be met;
- The piping systems and or components on both sides of the closure weld shall have been subjected to a hydrostatic leak test in accordance with ASME B31.3-1996 paragraph 345.4, a pneumatic leak test in accordance with ASME B31.3-1996 paragraph 345.5, a combination pneumatic-hydrostatic leak test in accordance with ASME B31.3-1996 paragraph 345.6, or in the case of components leak tested in accordance with the Code or Standard applicable to the design of the component;
- For manual welds, the requirements of ASME B31.3-1996 paragraph 344.7.1 (a) through (g) shall be invoked with the exception that the requirement of subparagraph 344.7.1 (e) "...aided by liquid penetrant or magnetic particle examination when specified in the engineering design" shall not be required. For welds made using the Orbital welding machines, the requirements of ASME B31.3 -1996 paragraph 344.7.1 (a), (b), (c), (d), and (g) shall be invoked. The implementation of these requirements shall be documented in the weld inspection report;
- Piping welds and the associated line numbers for which the closure weld classification is invoked shall be documented in a controlled document Weld List;
- Piping components may include mechanical elements other than piping; and
- In addition, BNI shall incorporate these requirements into the appropriate specification. DOE-ORP may further change the definition and application on the use of closure welds based on the Contractor's experience with their use or the Contractor's request for a change.

Justification: This change does not change the safety function of any pressure boundary components. The requirement to leak test pressure boundary field welds is primarily to ensure the reliability of the welds in addition to the reliability provided by the other required examinations. The exception allowed by ASME B31.3-1998, paragraph 345.2.3 that the final weld connecting piping systems or components which have been successfully tested in accordance with

paragraph 345 need not be leak tested provided the weld is examined in-process in accordance with paragraph 344.7 (a), (b), (c), (d), and (g) and passes with 100 % radiographic examination in accordance with paragraph 344.5 or 100 % ultrasonic examination in accordance with paragraph 344.6 provides adequate assurance that the weld is reliable and leak tight. The change continues to provide adequate safety since it requires that all piping closure welds that are not leak tested are in-process examined and 100 % volumetrically examined which exceeds the requirements of ASME B31.3-1996 for closure welds that are leak tested. The inability to hydrostatically or pneumatically leak test these closure welds does not affect the soundness of the welds.

24590-WTP-SRD-ESH-01-001-02, Rev. 5, page C.9-1, tailoring of AISC M016

Appendix C: Implementing Standards

9.0 AISC M016, Manual of Steel Construction, Allowable Stress Design (ASD)

Revision: 9th Edition
Sponsoring Organization: American Institute of Steel Construction

WTP Specific Tailoring

The following tailoring of M016 is required for use by the WTP contractor as an implementing standard for design of structural steel for Seismic Category III SSCs.

No specific section

Load combinations for design of structural steel members utilize those identified in UBC 97, Section 1612.3.

Justification: These load combinations represent the commercial requirements for allowable stress design of structural steel. Use of these load combinations will ensure compliance with the commercial design in accordance with the UBC.

No specific section

Seismic detailing requirements shall be in accordance with UBC 97, Chapter 22, Division V, Section 2214, for moderate seismic risk structures.

Justification: The requirements contained in this section contain accepted industry practice for design of important commercial steel structures. Use of this section will ensure compliance with the commercial design in accordance with the UBC.

HLW SKID INTERFACE CONNECTIONS

SERVICE	NOZZLE NUMBER	SIZE	INTERFACE
HLW-MELTER 1 & 2			
AMMONIA GAS IN	NO 1	1"	FLG SW, A182-F304, 304L, CL300, SCH40S, RF
INST AIR IN	NO 2	2"	FLG WN, A105, CL150, STD WT, RF
PROCESS GAS IN	NO 1	14"	FLG WN, A182-F316/316L, CL150, .375", RF
PROCESS GAS OUT	NO 2	16"	FLG WN, A182-F316/316L, CL150, .375", RF
AMMONIA/AIR OUT	NO 3	6"	FLG WN, A182-F304/304L, CL300, SCH40S, RF
AMMONIA/AIR IN	NO 3	6"	FLG WN, A182-F304/304L, CL300, SCH40S, RF

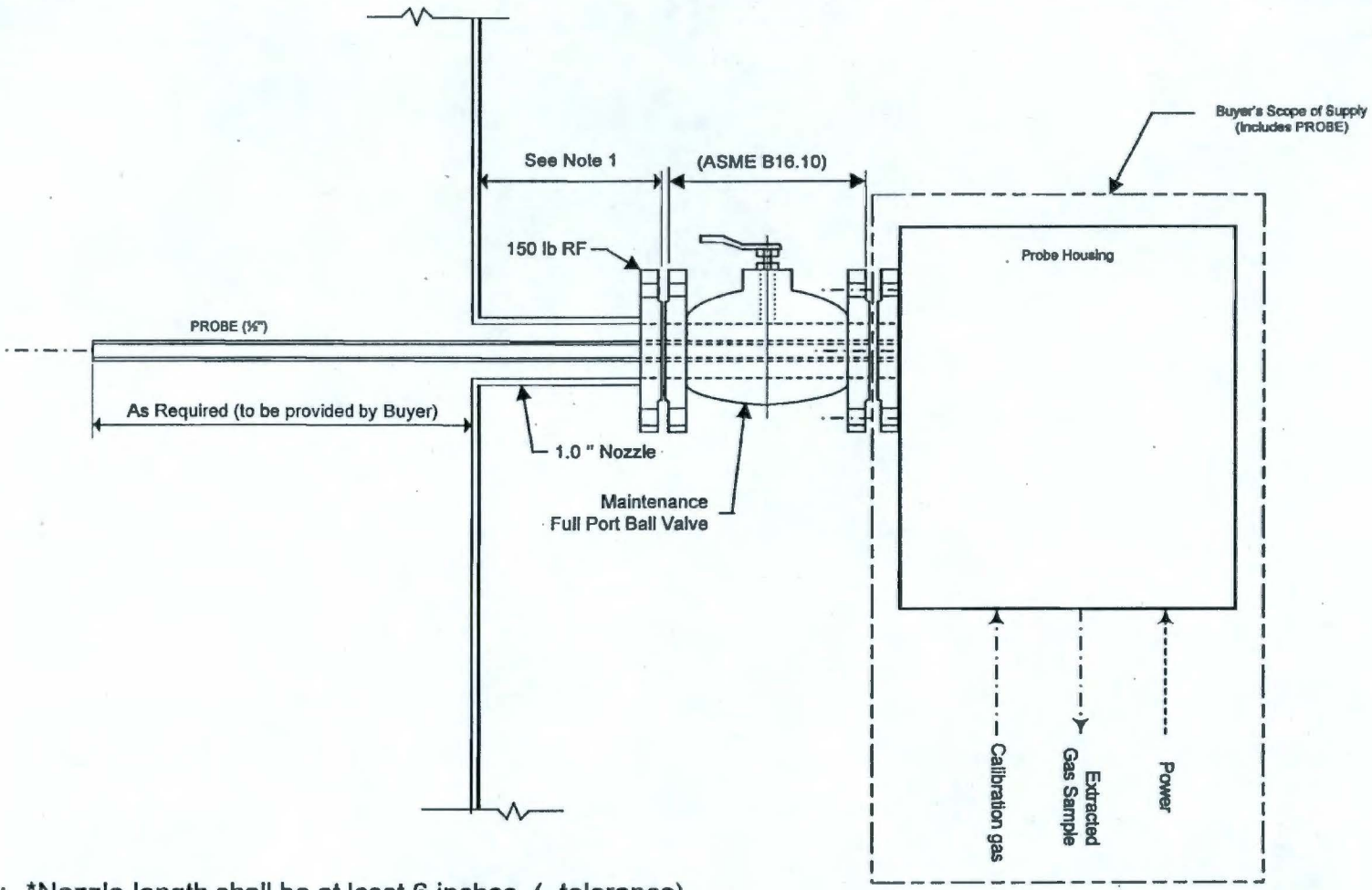

Note 1: *Nozzle length shall be at least 6 inches (- tolerance).
*There shall be at least 3 inches (- tolerance) of clearance, for tightening bolts, between the surface of the insulation jacketing and the underside of the flange.

Scale: None
Connection for Non-Routine Sample Extraction
Secondary Offgas Flange Connection for Gas Monitor Probe with Ball Valve for Maintenance
Gas Extraction Connection

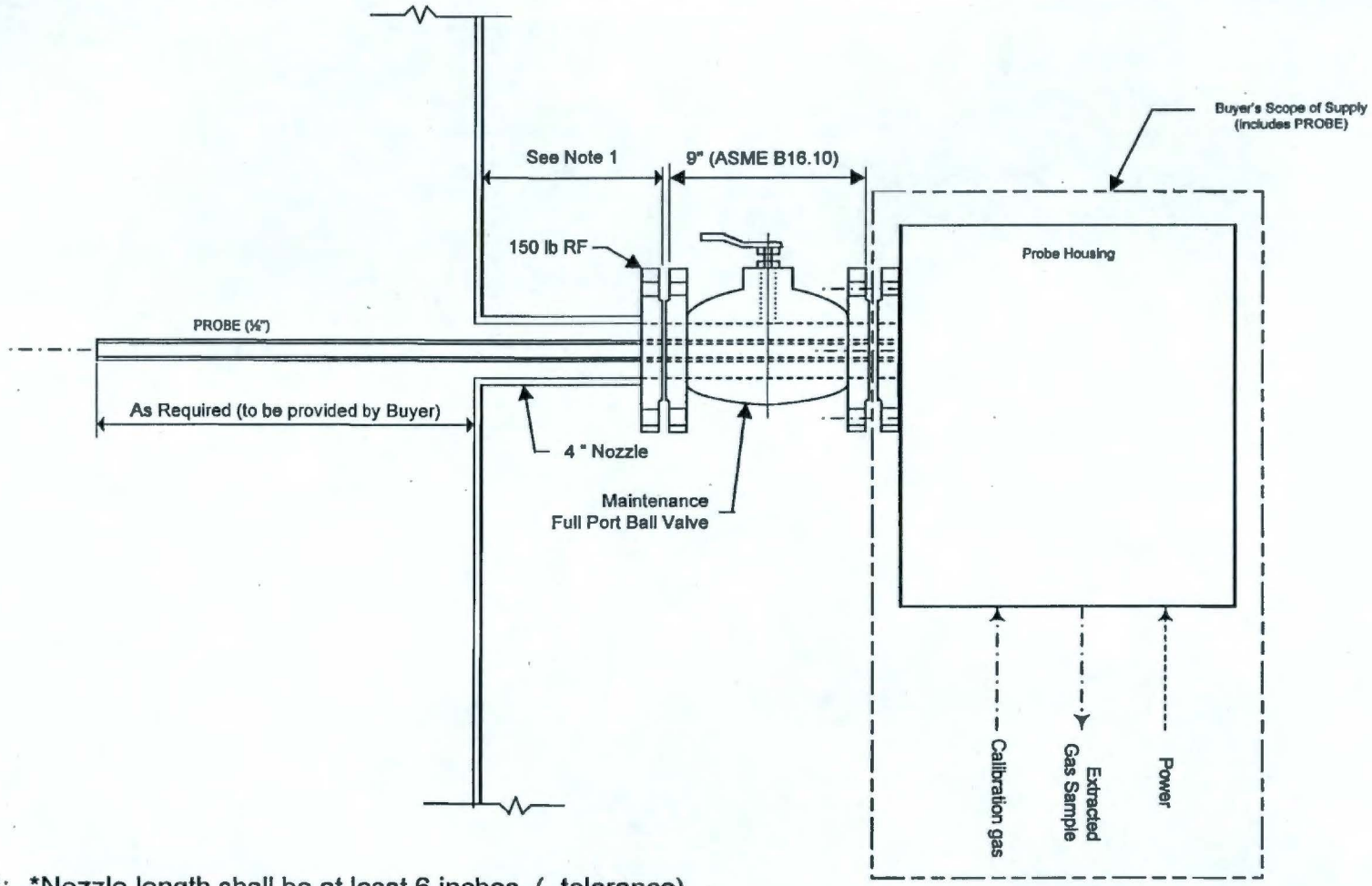

Note 1: *Nozzle length shall be at least 6 inches (- tolerance).
*There shall be at least 3 inches (- tolerance) of clearance, for tightening bolts, between the surface of the insulation jacketing and the underside of the flange.

Scale: None
Connection for Sample Extraction-Permanent Typical
Secondary Offgas Flange Connection for Gas Monitor Probe with Ball Valve for Maintenance
Gas Extraction Connection

Attachment 7

Certificate of Analysis for BASF Catalysts, LLC (VOCat 300S)

Seller's use of the COA is described in Section 10.2.6.3.

24590-HLW-3PS-MBTV-T0002, Rev. 1
Attachment 7
Page 2 of 2

Form #0697
Rev. 1

BASF
The Chemical Company

BASF
ENVIRONMENTAL CATALYST GROUP
9800 KELLNER ROAD
HUNTSVILLE, ALABAMA 35824
Main Phone # (256) 772-9373

CERTIFICATE OF ANALYSIS

LOT CONTROL NO: 3642401500 HSV PART NO: 166204-001 Customer Part Numt N/A

PART SIZE: 5.91 X 5.91 X 3 CPSI: A200 Customer P/O Numt CUA-0000016866

THIS IS TO CERTIFY THAT CATALYSTS DELIVERED MEET REQUIREMENTS OF:

CATALYST DRAWING: PS - 1118 REV. 3 SPECIFICATION: PS - 057 REV. 8
FINAL INSPECTION PROC. SOP - 0231 REV. 8

PRECIOUS METAL CONCENTRATION (SAMPLE OF ALL) IN g/ft3

TOTAL PM CONCENTRATION	SPEC	SAMPLE
MAX. AVERAGE	NR	
MIN. AVERAGE	32.51	35.53
MIN AVERAGE TPM	NR	NR
MIN INDIVIDUAL TPM	28.31	33.88

DRY GAIN	SPEC	SAMPLE
MAX. AVERAGE	2.15	
MIN. AVERAGE	1.29	1.72

DIMENSIONAL (AS PER AQL) IN INCHES

WASHCOAT ADHESION (% LOSS)

SAMPLE OF 1	SPEC	SAMPLE
MAX. INDIVIDUAL	2.0	1.0

BET SURFACE AREA IN mm2/cc

SAMPLE OF 1	SPEC	SAMPLE
MIN. INDIVIDUAL	4.0	11.9

MIN. FLOW (AFCM)

	SPEC	SAMPLE
MIN. INDIVIDUAL	TBD	381

CATALYTIC ACTIVITY IN DEG F

SAMPLE OF 1	SPEC	SAMPLE
MAX HEXANE T 20	289	200.0
MAX HEXANE t 50	387	347.0
MIN HEXANE CONV. @ 450c	92	98.0

VISUAL (AT 1.5 AQL): ALL REQUIREMENTS FOR FLATNESS, CHIPS, WORKMANSHIP, GOUGES, CRACKS, WEB DEFECTS, AND PASSAGE DEFECTS HAVE BEEN MET OR EXCEEDED AS DEFINED ON THE APPROPRIATE DRAWING.

COMMENTS:

Gary Weber 6-1-09
PROCESS QUALITY REPRESENTATIVE DATE