0039295

Date Received by IRA: 11-16-94 CW

INFORMATION RELEASE REQUEST - (Long Form)

(GRAY SHADED AREAS NOT TO BE FILLED IN BY INITIATOR)

94-051

1. COMPLETE THIS SECTION FOR ALL DOCUMENTS

A. Information Category

Speech or Presentation

- [ ] Full Paper
- [ ] Summary
- [ ] Abstract
- [ ] Visual Aid
- [ ] Journal Article
- [ ] Multimedia Presentation
- [ ] Software
- [x] Other Training Manual

B. Document ID Number (include rev., vol., etc.)

REG-0177

C. List attachments (i.e., copyright permission, copyright transfer)

TWRS Support Operations training rotary mode core sampling (RMCS) exhauster course 350072 student manual Revision 0.

D. Document Title

A document requested by Alex Stone of Ecology on November 15th, 1994.

E. WHC Project or Program

DEC 1994 RECEIVED EDMC

F. New or novel (patentable) subject matter? [N] No or Yes

If "Yes", has disclosure been submitted by WHC? [N] No or Yes If "Yes", Disclosure No(s): _____

G. Information received from others in confidence, such as proprietary data, and/or inventions? [N] No or Yes If "Yes", contact WHC General Counsel.

H. Copyrights? [N] No or Yes If "Yes", attach permission.

I. Trademarks? [N] No or Yes If "Yes", identify in document.

2. COMPLETE THIS SECTION FOR ALL DOCUMENTS REQUIRING SUBMISSION TO OSTI

A. Unclassified Category UC –

B. Budget & Reporting Code B&R –

3. COMPLETE THIS SECTION ONLY FOR A JOURNAL SUBMISSION

A. Title of Journal

4. COMPLETE THIS SECTION ONLY FOR A SPEECH OR PRESENTATION

A. Title for Conference or Meeting

B. Group or Society Sponsoring

C. Date(s) of Conference or Meeting

D. City/State

E. Will material be published in proceedings? [ ] No or Yes

Will material be handed out? [ ] No or Yes

5. REVIEWS

Signature indicates Approval as Requested unless otherwise indicated

Reviewers	Yes	Name (print)	Signature/Date	Limited-Use Info.
General Counsel	[ ]			[ ]
DOE-RL	[ ]			[ ]
Communications	[ ]			[ ]
Applied Technology-Export Controlled Information or International Program	[ ]			[ ]
Other	[ ]			[ ]
Other	[ ]			[ ]

6. Applied Technology Material Referenced [X] No [ ] Yes

7. Release Level [X] Public [ ] Limited Distribution

8. Author/Requestor

Leslie Dougherty — Leslie Dougherty — 11/16/94

(Print and Sign) Date

9. Responsible Manager

Eric M. Greager — Anthony B. Mills for — 11/16/94

(Print and Sign) Date

INFORMATION RELEASE ADMINISTRATION APPROVAL

IRA Approval is required before release. Release is contingent upon resolution of mandatory comments. NOTE: This block for IRA use only.

APPROVED FOR RELEASE — OFFICIAL DOCUMENT — CW — Date 11-16-94

Date Cancelled

Date Disapproved

A-6001-401 (07/94)

REG-0177
Document ID Number

10. LEGENDS/NOTICES/MARKINGS (Required by WHC-CM-3-4 or Reviewer). Reviewer indicates applicable markings to be affixed or removed.

	Affix	Remove	Initials		Affix	Remove	Initials
Applied Technology	☐	☐		Official Use Only	☐	☐	
Availability - OSTI	☐	☐		Patent Status	☐	☐	
Availability - ESTSC	☐	☐		Predecisional Information	☐	☐	
Availability - NTIS	☐	☐		Programmatic Notice	☐	☐	
Business-Sensitive Information	☐	☐		Proprietary Information	☐	☐	
Computer Software Notice	☐	☐		Purpose and Use	☐	☐	
Copyright License Notice	☐	☐		Thesis/Dissertation	☐	☐	
Export Controlled Information	☐	☐		Trademark Disclaimer	☐	☐	
Legal Disclaimer	☐	☐		Other:	☐	☐	
Limited Disclosure	☐	☐					

11. MANDATORY COMMENTS (List only mandatory comments here. All other comments shall be made on the document and returned to the author.)	Reviewer (Print & Sign)	Date	Resolved by Author/Requestor (Print & Sign)	Date

12. ADDITIONAL INFORMATION/COMMENTS:

A-6001-401R (07/94)

TWRS SUPPORT OPERATIONS TRAINING

ROTARY MODE CORE SAMPLING (RMCS)

EXHAUSTER COURSE 350072

STUDENT MANUAL

REVISION 0

TWRS SUPPORT OPERATIONS TRAINING
RMCS EXHAUSTER COURSE 350072
STUDENT MANUAL

TABLE OF CONTENTS

Topic	Page
OBJECTIVES	ii
I. INTRODUCTION	1
A. History	1
B. Purpose	1
II. RESPONSIBILITIES	2
A. Operator	2
B. Person In Charge (PIC)	2
C. Instrument Technician	2
D. Health Physics Technician	2
E. Cognizant Engineer	3
F. Industrial Health and Safety (IH&S) Representative	3
III. SAFETY	3
A. Breathing Zone Limits	3
B. Tank Pressurization	3
C. Spark Resistant Tools	3
D. Asbestos	4
E. Tripping Hazards	4
F. Compressed Gas Cylinders	4
G. Bonding	4
H. Electrical Shock	4
IV. MAJOR COMPONENT DESCRIPTIONS	5
A. In-Riser Prefilter	5
B. Seal Pot/Pump Unit	7
C. Photohelic Pressure Gauges	8
D. Magnehelic Pressure Gauges	10
E. Tank Exhaust In-Line Heater	10
F. HEPA Filter Assembly	11
G. Exhauster Fan/Motor Assembly	11
H. Main Power Distribution Panel	15
I. Instrument Cabinet Air Conditioning and Heating	16
J. Rosemount 400A Hydrocarbon Analyzer	16
K. Ammonia Detector	17
L. Eberline 6A-1 Alpha Monitor	17
M. Eberline AMS-4 Beta/Gamma Monitor	18
N. Air Sampling System	19
O. Chessell Data Logger	21
V. AUTOMATIC SHUTDOWNS, INTERLOCKS, AND COMMON FAULT ALARMS	25
A. Automatic Shutdowns, Interlocks, and Recommended Actions	25
B. Common Fault Alarms and Recommended Actions	26
VI. EXHAUSTER OPERATION	29
VII. REVIEW QUESTIONS	30

TWRS SUPPORT OPERATIONS TRAINING
RMCS EXHAUSTER COURSE 350072
STUDENT MANUAL

OBJECTIVES

Terminal Objective

Given the RMCS Exhauster Student Manual and Work Plan TF-WP-94-010, *Operate Rotary Mode Sampling System Exhauster in Tank 241-C-106C*, the RMCS operator will **analyze** the information to determine operator responsibilities and personnel interfaces, safety precautions, component functions and locations, and operator actions during normal and abnormal events.

Enabling Objectives

EO-1 **State** the purpose of the RMCS exhauster.

EO-2 **Describe** the responsibilities of the RMCS exhauster operator and the operator's interfaces with other personnel.

EO-3 **State** the safety precautions that must be observed during RMCS exhauster operation.

EO-4 **Describe** the function and location of each major component of the RMCS exhauster.

EO-5 **List** the 5 conditions which will cause an automatic shutdown of the RMCS exhauster.

EO-6 Given a copy of TF-WP-94-010 and an automatic shutdown or common fault alarm message on the Data Logger, **determine** the possible causes of the alarm and the recommended operator actions.

EO-7 Given a copy of TF-WP-94-010, **determine** the steps that the operator must perform during the following operations:

- Setup Exhauster.
- Startup Exhauster From Shutdown.
- Operate Exhauster.
- Shutdown Exhauster To Standby.
- Startup Exhauster From Standby.
- Place Exhauster Into Shutdown.
- Takedown Exhauster.

I. INTRODUCTION (EO-1)

A. History

In 1989, the Department of Energy (DOE), the Washington State Department of Ecology (WDOE) and the Environmental Protection Agency (EPA) signed an agreement to cleanup the chemical and radioactive wastes at the Hanford Site. Commonly known as the Tri-Party Agreement, this agreement contains the cleanup strategy and uses enforceable milestones to keep the program on schedule. Many of these milestones are directly connected to characterizing tank waste. Although the specific characterization of the tanks is unknown, some are known to contain highly radioactive material, volatile organic compounds, and explosive gases. These may occur separately or in combination within a tank.

The criteria for the development of the RMCS system included consideration of the tank's radiological and chemical content and the potential for explosion and/or release of toxic vapors as a result of the sampling activity. The RMCS system was designed to obtain core samples in a safe manner without releasing harmful materials to the environment. The RMCS support equipment includes an electrical generator to supply auxiliary power, a breathing air compressor to supply fresh air to the sampling team, a liquid nitrogen trailer to supply nitrogen purge gas to the rotary drill bit assembly, a support trailer to supply heated wash water, and an exhauster skid to filter vapor exhaust from the tank. The exhauster is required during rotary mode sampling only.

B. Purpose

The exhauster provides a means of exhausting pressure in the tank, which is introduced by the nitrogen purge used to cool the drill bit. The exhauster also reduces emissions to the atmosphere of radioactive particulates in order to meet the requirements of all federal, state, local, and Westinghouse Hanford Company guidelines.

This reduction in the release of radioactive particles is accomplished by drawing the tank gases through a prefilter located in the tank riser and then through a filter bank containing a second prefilter and two High-Efficiency Particulate Air (HEPA) filters in series before exhausting the gases out a four-inch stack. Exhaust gases exiting the stack are continuously monitored for the following:

- Ammonia
- Total organic compounds (TOC)
- Stack velocity flow
- Exhaust stack temperature
- Particulate Alpha and Beta/Gamma

II. RESPONSIBILITIES (EO-2)

A. Operator

The Operator's principle responsibility is to ensure the exhauster is operated safely. In addition, the Operator is responsible for:

- Recording data on data sheets.
- Notifying the PIC if visible emissions are observed coming from the stack.
- Notifying the PIC if an automatic shutdown or common fault alarm occurs.
- Responding to automatic shutdowns and common fault alarms.

B. Person In Charge (PIC)

The PIC is responsible for:

- Supervising all field activities.
- Ensuring and documenting prerequisites are met.
- Coordinating activities among organizations supporting exhauster operations.

C. Instrument Technician

The Instrument Technician, together with the HPT, are responsible for placing the monitoring equipment in service and removing it from service. This includes the following activities:

- Verifying calibration and operability of instrumentation.
- Placing the Eberline AMS-4 Beta/Gamma Continuous Air Monitor (CAM) in service.
- Placing the Eberline 6A-1 Alpha CAM in service.
- Placing the Rosemount 400A Hydrocarbon Analyzer in service.
- Entering TOC alarm setpoints.

D. Health Physics Technician (HPT)

The HPT is responsible for monitoring and controlling radiological conditions at the jobsite. This includes the following activities:

- Conducting radiation surveys prior to, during, and upon completion of sampling activities.
- Recommending radiation control and related actions to the PIC.
- Releasing work areas following completion of sampling activities.
- Changing the record sample filter.

E. Cognizant Engineer

The Cognizant Engineer is responsible for:

- Resolving equipment problems.
- Providing TOC alarm setpoints.

F. Industrial Health and Safety (IH&S) Representative

The IH&S Representative is responsible for monitoring for flammable gasses and vapors in the area before work begins, as containment is broken, and during the entire sampling process.

III. SAFETY (EO-3)

A. Breathing Zone Limits

The vapor space of each candidate tank is sampled and characterized prior to exhauster operation. By knowing the vapors present, it is possible to calculate stack emissions. When containment is first broken (tank riser is opened), personnel operating the sampling drill rig, including the exhauster, and any other personnel within 200 feet of the stack discharge will be on supplied air. The Industrial Health and Safety (IH&S) representative samples the tank vapor space, monitors the surrounding area, and then determines the breathing air requirements after the samples are performed.

If any of the following breathing zone limits are exceeded, the Tank Farm shall be evacuated:

- 1 ppm organic vapor
- 0.5 ppm nitrous oxide
- 15 ppm ammonia
- 0.2% hydrogen above background
- 20% of lower explosive limit of combustibles

B. Tank Pressurization

If the exhauster were not present, the nitrogen purge gas flow supplied to the rotary mode drill bit for cooling could pressurize the tank. However, exhauster stack flow rate is maintained at a constant, nominal 200 standard cubic feet per minute (scfm). This flow rate exceeds the maximum nitrogen purge gas flow into the tank, and will prevent the tank pressure from rising above atmospheric pressure during rotary mode sampling.

C. Spark Resistant Tools

When a tank riser is opened, spark resistant tools shall be used to minimize the possibility of an explosion.

D. Asbestos

Asbestos may be present when blank flanges are removed from tank risers. Because of the potential hazards of asbestos exposure, only trained personnel shall remove asbestos gaskets on tank risers.

E. Tripping Hazards

The RMCS system uses a diesel generator to supply auxiliary power, a breathing air compressor to supply fresh air to the sampling team, a liquid nitrogen trailer to supply nitrogen purge gas, a support truck to supply heated wash water, and an exhauster to vent the tank. Various electrical cables, nitrogen lines, air hoses, water hoses, drain lines, and duct work will be present to connect these components; therefore, personnel should be aware of the tripping hazards associated with them.

F. Compressed Gas Cylinders

The exhauster contains large gas cylinders containing compressed hydrogen/helium and zero grade air. The hydrogen/helium gas cylinder presents a fire and explosion hazard. There shall be NO open flames or smoking within 50 feet of the exhauster because of this hazard. Care must be taken when handling compressed gas cylinders so that the valve assemblies are not severed from the cylinder causing the cylinder to become a flying projectile.

G. Bonding

All equipment associated with sampling which has the possibility of developing a static charge is required to be bonded (grounded). This includes any equipment supplied from the generator without a transformer. The purpose of bonding all equipment is to prevent the build up of static electricity which could possibly cause an explosion in a volatile environment.

H. Electrical Shock

Operators and instrument technicians routinely operate equipment inside of the exhauster instrument cabinet. The energized equipment in the instrument cabinet poses an electrical shock hazard. Personnel should use extreme caution when operating valves and switches inside of the cabinet. Personnel must also be careful not to step on electrical lines on the ground since this could weaken the insulation and result in shock or electrocution.

IV. MAJOR COMPONENT DESCRIPTIONS (EO-4)

A. In-Riser Prefilter

1. Function

The in-riser prefilter is used to decrease the HEPA filter loading, minimize personnel radiation exposure, and reduce the overall solid waste generated during the sampling process.

2. Description

The in-riser prefilter is a five foot long, 11 inch diameter stainless steel filter inside of a sintered fiber web weighing approximately 250 pounds. The filter is pleated to provide approximately 95 square feet of filter media and is covered on both sides with an 18 by 18 mesh. The filter is further protected by an 18 gauge expanded metal shield and assembly bolts that run the length of the filter. The filter is designed to be 99% efficient.

The in-riser prefilter can be backflushed with water. The purpose of backflushing the prefilter is to return contamination to the tank and to reduce the amount of debris contained in the filter. It also increases the efficiency of the filter and permits the filter to be reused. Backflushing is performed during exhauster takedown at the completion of the sampling activity and at the discretion of the PIC whenever the prefilter becomes loaded with particulates. The two indications that the prefilter is becoming loaded (i.e., plugged) are:

- Decreasing stack flow on the Stack Massflow Transmitter (FT-1).
- Increasing differential pressure on the Membrane Filter Differential Pressure gauge (VTP-PDI-2201A).

If stack flow decreases to 150 scfm, it will generate an alarm and automatic shutdown of the exhauster. See Section V of this manual for a detailed discussion of all the automatic shutdowns and their interlocks. See Table 4 of this manual for the recommended actions for this alarm condition. The Membrane Filter Differential Pressure gauge measures differential pressure across the in-riser prefilter. Section IV. C. of this manual for a detailed discussion of this pressure gauge.

3. Location

The in-riser prefilter is installed inside the tank riser during exhauster setup (Figure 1).

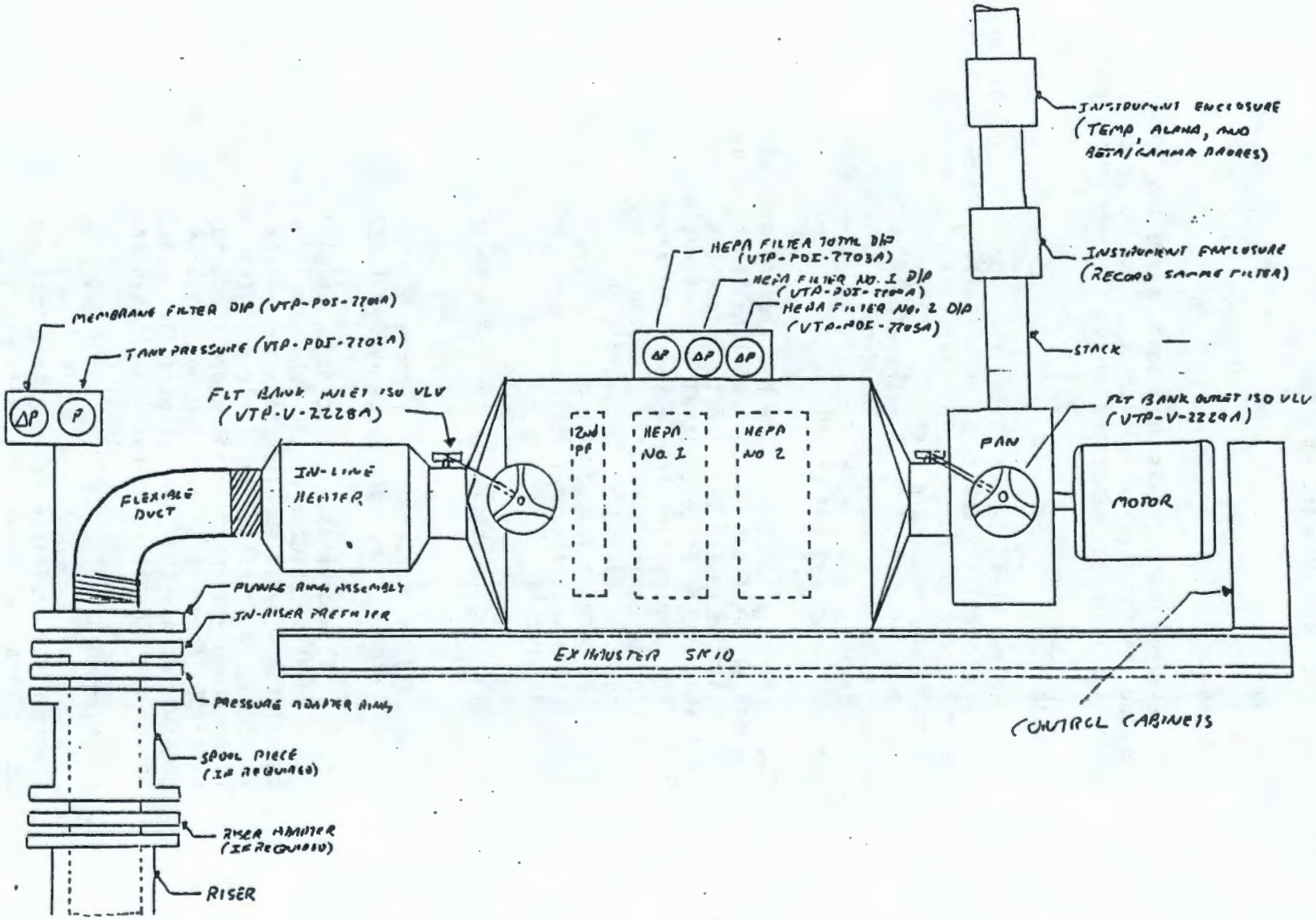

Figure 1 - Exhauster Flowpath Components.

B. Seal Pot/Pump Unit

1. Function

The seal pot captures condensate from exhauster low points and forms a seal between the tank riser and the exhauster (similar to a drain trap used in household plumbing).

2. Description

The seal pot is a tank weighing approximately 50 pounds that was initially designed to gravity drain exhauster condensate back to the tank riser. However, testing revealed that gravity draining was not effective. A pump was installed with an associated seal pot level control system to pump exhauster condensate back to the riser.

During exhauster setup, the seal pot/pump unit is prepared for service as follows:

- The seal pot/pump unit is lifted off the skid and placed on the ground as low as possible to facilitate draining.
- The condensate drain valves to seal pot are opened.
- The pump discharge line and the seal pot vent line are connected to the riser pressure adapter ring.
- Heat tracing is connected along the seal pot drain line (if required).
- The seal pot isolation valves are opened.
- The pump is plugged into the outlet near the compressed gas bottle rack.
- The seal pot is filled with water (to form the initial seal between the exhauster and tank riser).

During exhauster startup, the stack condensation drain valve is closed so that it won't be open when the fan is running.

During exhauster shutdown, the seal pot/pump unit is shutdown as follows:

- The stack condensation drain valve is re-opened.
- The pump is run until the seal pot is empty.

During exhauster takedown, the seal pot/pump unit is removed from service as follows:

- The condensate drain lines to the seal pot are closed.
- The seal pot drain line heat tracing is removed (if installed).
- The seal pot isolation valves are closed.
- The seal pot drain and vent lines are disconnected.
- The seal pot and pump are placed on the skid.

3. Location

Before the exhauster skid is moved, the seal pot/pump unit is placed on its holding platform at the riser end of the exhauster skid. During exhauster setup, the seal pot/pump unit is lifted off the skid and lowered to the ground once the skid is in place and leveled.

C. Photohelic Pressure Gauges

1. Function

Photohelic pressure gauges are used to detect changes in tank pressure or changes in differential pressure across the exhauster filter assemblies. The photohelics also provide alarm functions and initiate automatic shutdown of the exhauster if tank pressure or filter differential pressure reaches a predetermined value. The three photohelics associated with the exhauster have the following functions:

a. Membrane Filter Differential Pressure (VTP-PDI-2201A)

The Membrane Filter Differential Pressure gauge measures differential pressure across the in-riser prefilter. It is designed to alarm and shutdown the exhauster if the in-riser prefilter differential pressure exceeds 10" water gauge (W.G.) to prevent damage to the prefilter and the exhauster.

b. Tank Pressure (VTP-PDI-2202A)

VTP-PDI-2202A is designed to alarm and shutdown the exhauster if tank pressure is less than -3" W.G. to prevent drawing an excessive vacuum in the tank.

c. HEPA Filter Total Differential Pressure (VTP-PDI-2203A)

VTP-PDI-2203A measures the total differential pressure across the second prefilter and both HEPA filters. It is designed to alarm and shutdown the exhauster if the total differential pressure across all three filters exceeds 5.5" W.G. to prevent damage to the filters and the exhauster.

2. Description

A photohelic pressure gauge is a differential pressure gauge with a built in alarm circuit (photocell). The photohelic pressure gauges have two piping connections (high and low). The high side is connected to the upstream (riser) side of the filters while the low side is connected to the downstream (fan) side of the filters. Filter D/P will increase if the filter becomes plugged or restricted in some way. This is called filter loading. Backflushing of the in-riser prefilter or replacing the second prefilter or HEPA filters may be necessary.

Photohelic and magnehelic (see Section IV. D.) pressure gauges are very sensitive to pressure and are used to measure inches of water pressure only. Pressure in excess of 15 pounds (psig) applied to either side of the diaphragm will damage the gauge. The face plate and the contents of the gauge may be expelled from the housing and could cause serious injury to anyone in the vicinity.

Photohelic alarm set points may be adjusted. Black adjustment knobs located on the face of the each gauge will raise or lower a red pointer. This pointer indicates the high or low alarm set point. When the indicating pointer (black pointer) passes beneath the set point indicator, it cuts off the signal being sent through the photo cell and activates an alarm circuit.

3. Location

The Membrane Filter D/P (VTP-PDI-2201A) and Tank Pressure (VTP-PDI-2202A) photohelics are mounted together on the prefilter instrument rack which is installed on the flange ring assembly. The HEPA Filter Total D/P (VTP-PDI-2203A) photohelic is mounted above the filter housing together with the two magnehelic pressure gauges (Figure 1).

D. Magnehelic Pressure Gauges

1. Function

Magnehelic pressure gauges are used to detect changes in differential pressure across a filter assembly.

2. Description

The magnehelic pressure gauges, VTP-PDI-2204A and VTP-PDI-2205A, measure differential pressure across HEPA Filters No. 1 and No. 2, respectively. The magnehelics are for indication only and do not have any alarm or automatic shutdown functions because they do not have any alarm circuits (photo cells).

3. Location

The No. 1 HEPA Filter D/P (VTP-PDI-2204A) and No. 2 HEPA Filter D/P (VTP-PDI-2205A) magnehelics are mounted above the filter housing together with the HEPA Filter Total D/P (VTP-PDI-2203A) photohelic (Figure 1).

E. Tank Exhaust In-Line Heater

1. Function

The in-line heater maintains the vapor exhaust stream temperature above the dew point to keep relative humidity in the HEPA filter housings less than 70%. This is accomplished by heating the vapor exiting the tank to keep it from condensing and thereby maintaining low humidity. Vapor condensation in the exhauster would gradually increase HEPA filter differential pressure and decrease the expected filter life (increases potential for filter failure).

2. Description

The in-line heater is a thermostatically controlled, 2 kilowatt (maximum) heater. Temperature control is adjustable from 0 to 400°F. However, the heater should never be set above 210°F because this is the temperature at which the heaters will trip off due to overtemperature. High temperatures could ignite flammable vapors. For this reason, the exhauster shall NOT be used on tanks containing flammable vapors. The electric heater control panel (VTP-PNL-2201A) contains an on/off disconnect switch, a heater on/off (blue) light, a heater overtemperature (red) light, and a heater element failure (red) light. The heater on/off light turns on and off as the thermostat cycles the heater.

3. Location

The heater element is mounted inside the ventilation duct on the riser side of the skid just prior to the filter bank inlet isolation valve (VTP-V-2228A). The electric heater control panel is located near the fan/motor at the opposite end of the skid (Figure 1).

F. HEPA Filter Assembly

1. Function

The HEPA filter assembly filters tank vapors to maintain airborne radioactive material as low as reasonably achievable (ALARA).

2. Description

The HEPA filter assembly consists of three filters in series with the filter bank inlet and outlet isolation valves. Exhaust from the in-line heater passes through the filter bank inlet isolation valve (VTP-V-2228A) and enters the second prefilter (VTP-FLT-2201A), HEPA Filter No. 1 (VTP-FLT-2202A), and then HEPA Filter No. 2 (VTP-FLT-2203A). Exhaust from the second HEPA filter passes through the filter bank outlet isolation valve (VTP-V-2229A) into the fan and then exits through the stack.

The second prefilter is a corrugated paper filter (similar to the furnace filters in a household heating system). The two HEPA filters are designed for a removal efficiency of 99.97%. The HEPA filter assembly is designed for ease of decontamination. The filter housing is of the bag-in/bag-out design with a cam-type centering mechanism to secure the filter seal against the housing frame.

3. Location

The HEPA filter assembly is between the in-line heater and the fan/motor (Figure 1).

G. Exhauster Fan/Motor Assembly

1. Function

The fan/motor provides a nominal flow rate through the exhauster of 200 scfm.

2. Description

The direct drive fan has a cast aluminum backward curved wheel in a cast aluminum housing, and has a spark resistant rating. The driver is a 7.8 horsepower (at 3600 rpm) explosion proof motor. Both the fan and motor are fully enclosed to reduce noise and minimize the spread of contamination. Motor ventilation is provided by a pair of small (8" x 8" x 6") HEPA filters. The motor is powered by the 480 volt RMCS diesel generator through the variable frequency disconnect (VTP-DS-2201A).

The fan/motor combination is designed to produce an air flow in excess of 1900 scfm. This is far more than is required for the exhauster application. A variable frequency drive motor controller is installed to reduce the motor speed to obtain the required 200 scfm flow. As the exhauster filters load with particulates, the differential pressure across each filter increases and the flow through the exhauster decreases. To overcome this tendency, the variable frequency drive controller uses an output signal from a Yokogawa fan speed controller (VTP-FC-2206A). The Yokogawa controller uses an input from the FT-1 stack airflow transmitter (VTP-FT-2201A) and dampens the signal to control the variable frequency drive controller and thereby automatically adjust motor rpm to maintain a constant flow. The Yokogawa controller also provides the signal for the low (150 scfm) and high (250 scfm) stack airflow exhauster shutdowns.

3. Location

The fan/motor is on the end of the skid farthest away from the riser (Figure 1). The variable frequency drive motor control panel (VTP-PNL-2202A) is mounted on fan/motor end of the skid. The variable frequency disconnect is attached to the left side of VTP-PNL-2202A. The Yokogawa controller is attached to the inside of the left instrument cabinet door (Figure 2). The stack airflow transmitter is inside the instrument cabinet (Figure 3).

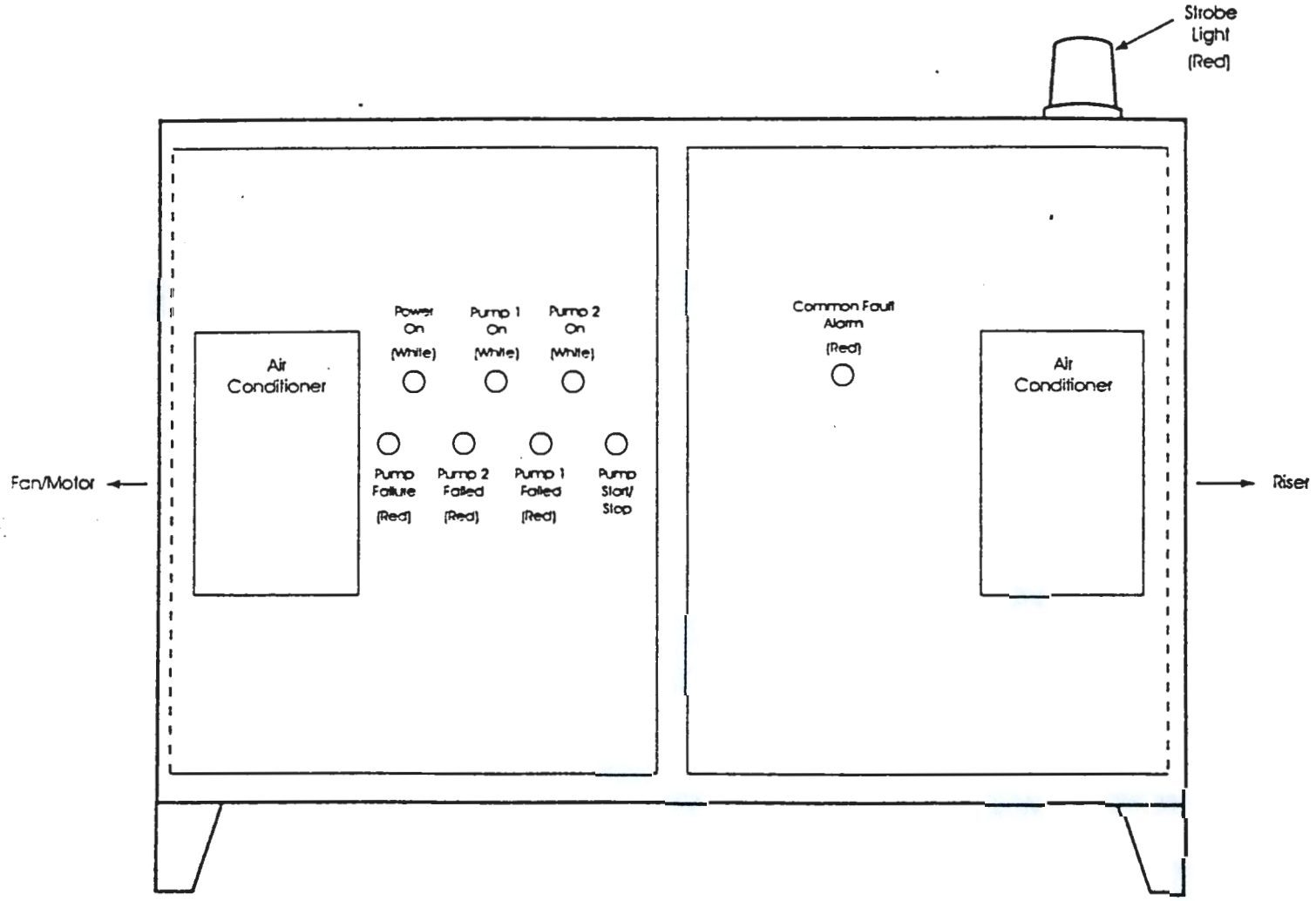

Figure 2 - Exhauster Instrument Cabinet (Doors Closed)

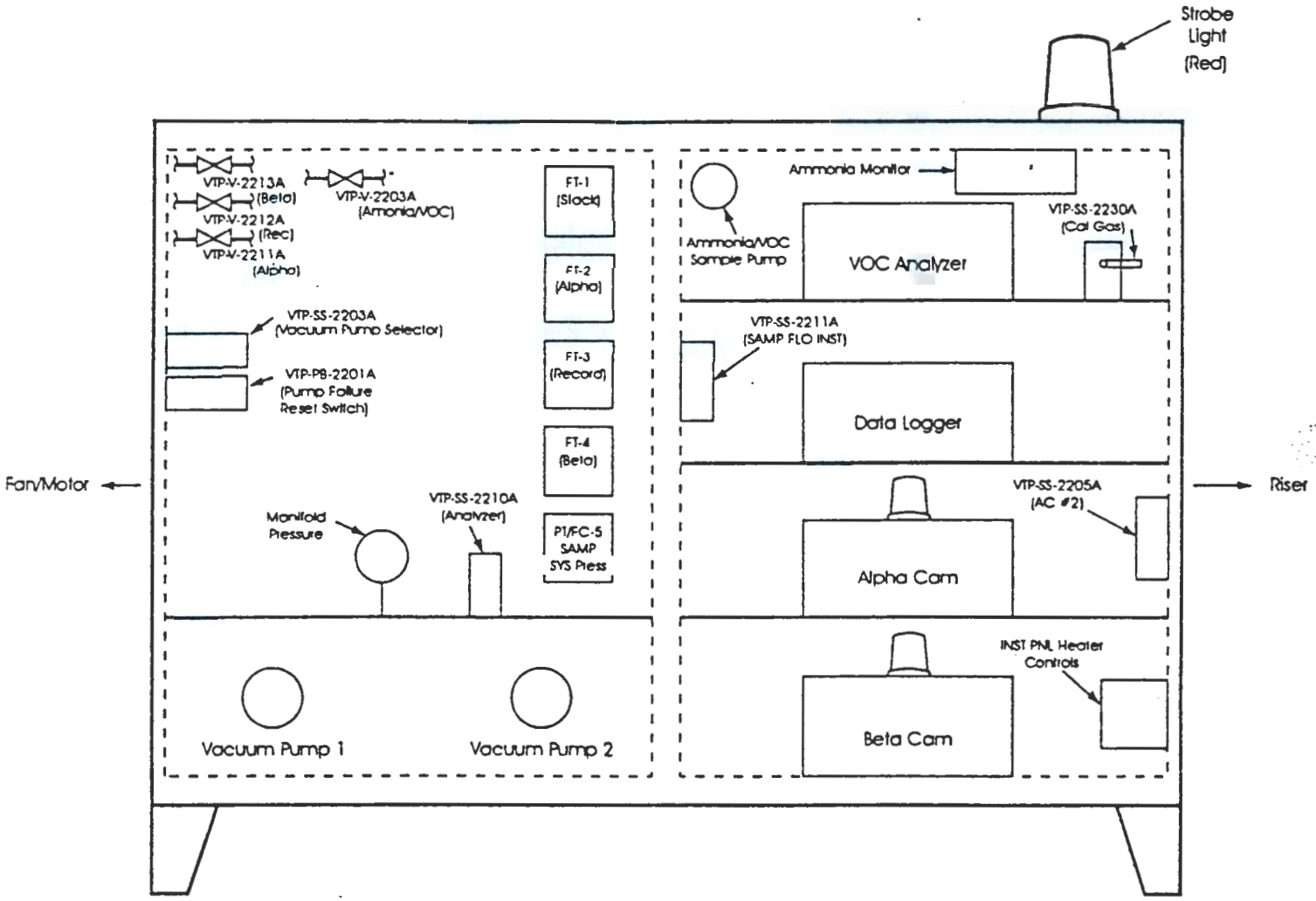

Figure 3 - Exhauster Instrument Cabinet (Doors Open)

H. Main Power Distribution Panel (VTP-DP-2201A)

1. Function

The main power distribution panel distributes 480 volt power from the RMCS diesel generator to various exhauster components and provides overload protection to those components.

2. Description

The main power distribution panel circuit breakers supply power and overload protection for exhauster components. The breakers are arranged in two columns inside the panel as follows:

Breaker #	Breaker #
1	2
3	4
5	6
7	8
13	

The function of each breaker follows:

Breaker #	Function
1	Instrumentation #1 (supplies stack and sample flow control equipment).
2	Air conditioning unit #2.
3	Air conditioning unit #1 & Seal Pot Pump.
4	Hydraulic lift.
5	Instrumentation #2 (supplies monitoring equipment).
6	Heater tape for condensate drain line.
7	Vacuum pump #1.
8	Vacuum pump #2.
13	Main circuit breaker.

3. Location

The main power distribution panel is mounted with the control panels on fan/motor end of the skid (Figure 1).

I. Instrument Cabinet Air Conditioning and Heating

1. Function

The instrument cabinet air conditioning and heating system maintains the instrument cabinet at a constant 72°F to protect temperature sensitive instrumentation and equipment.

2. Description

There are two instrument cabinet air conditioning units. Each unit is powered through the main power distribution panel and switches VTP-SS-2204A (AIR COND NO 1 PWR SW) and VTP-SS-2205A (AIR COND NO 2 PWR SW). VTP-SS-2205A also provides power to the instrument cabinet heater controls (VTP-TC-2201A).

3. Location

The air conditioner units are mounted on the outside of the instrument cabinet doors (Figure 2). VTP-SS-2204A is attached to the inside of the left instrument cabinet door below the Yokogawa controller. The instrument cabinet heater controls and VTP-SS-2205A are inside the instrument cabinet (Figure 3).

J. Rosemount 400A Hydrocarbon Analyzer

1. Function

The analyzer automatically and continuously measures stack exhaust hydrocarbon concentration and provides input to the data logger for alarm functions.

2. Description

The analyzer uses the flame ionization method of detection to measure the volatile organic carbon (VOC) in the stack exhaust gas. VOC is a concern because it is flammable.

The analyzer contains a burner which receives a regulated flow of stack exhaust gas from the Ammonia/VOC Sample Pump. The purpose of the pump is to increase the stack exhaust gas pressure to provide the proper flow to the burner. The burner flame is sustained by regulated flows of air and fuel gas (hydrogen/helium mixture). Within the flame, the hydrocarbon components of the stack exhaust gas undergo a complex ionization that produces electrons and positive ions.

Polarized electrodes collect these ions, causing a current to flow through the electronic measuring circuitry. The current flow is proportional to the rate at which carbon atoms enter the flame.

An instrument technician places the analyzer in service and maintains it.

3. Location

The Rosemount Hydrocarbon Analyzer is inside the instrument cabinet (Figure 3).

K. Ammonia Detector

1. Function

The ammonia detector continuously measures the stack exhaust gases for ammonia concentration and provides input to the data logger for alarm functions.

2. Description

The original ammonia detector was replaced with a Brüel & Kjær Type 1302 Multi-Gas Monitor. The new ammonia detector will be removed and transported separately whenever the exhauster skid is moved to protect it from damage and excessive vibration.

3. Location

The ammonia detector is inside the instrument cabinet (Figure 3).

L. Eberline 6A-1 Alpha Monitor

1. Function

The alpha monitor is a continuous air monitor (CAM) that calculates the activity in the stack exhaust gases due to alpha emitting isotopes and provides an input to the data logger for alarm functions.

2. Description

An instrument technician places the alpha analyzer in service and maintains it. The power on/off switch is located on the back of the monitor.

The information presented on the dot matrix liquid crystal display system includes time and date, air flow rate, measured values (concentration, cpm, etc.), and the alarm setpoints. Alarms include both a strobe light and a bell attached to the unit. The local keyboard is used for entry of calibration and alarm parameters and for selection of information to be displayed. A security code entry is required before the operational parameters can be changed. The maximum count rate is approximately 500,000 cpm.

3. Location

The alpha monitor is inside the instrument cabinet (Figure 3).

M. Eberline AMS-4 Beta/Gamma Monitor

1. Function

The beta/gamma monitor continuously monitors stack exhaust for beta/gamma emitting particulates and provides input to the data logger for alarm functions.

2. Description

The beta/gamma monitor consists of two rows of LED bar graphs, an 18 function keypad, a front panel display of READY and MALFUNCTION lights, alarm strobe (red) light, and sonalert. An instrument technician places the beta/gamma detector in service and maintains it. The power on/off switch is located on the back of the monitor.

The beta/gamma monitor provides direct concentration readout in addition to the net beta count rate information to determine airborne activity. Fast and slow concentration alarms allow the system to respond rapidly to acute releases while still retaining the ability to respond to a low level chronic release into the environment. To enhance indication, an LED bar graph located on the front panel displays the concentration as a percent of the slow alarm setpoint.

The sampling head supports two detectors. One monitors beta activity on the filter and the other measures real-time gamma background levels. The two detectors are sealed gas proportional counters which provide beta sensitivity and response. When compared with other detector designs, this design is not as sensitive to changes in temperature. The monitor also includes an air flow sensor.

3. Location

The beta/gamma detector is inside the instrument cabinet (Figure 3).

N. Air Sampling System

1. Function

The air sampling system measures the air flow of the exhaust stack, and withdraws representative particle and gas samples for record purposes.

2. Description

Refer to Figure 4 for the Exhauster Air Sampling System Flowpaths.

Three particle sample extraction probes withdraw stack air samples which are collected by: 1) a particulate alpha detector, 2) a particulate record sampler, and 3) a particulate beta/gamma detector. A fourth probe withdraws stack gas samples for analysis by an ammonia analyzer and the Rosemount VOC analyzer to determine gas concentrations. The associated isolation valves are as follows:

- VTP-V-2203A Ammonia Sample System Inlet Isolation Valve
- VTP-V-2211A Alpha Sample FCV Inlet Isolation Valve
- VTP-V-2212A Record Sample FCV Inlet Isolation Valve
- VTP-V-2213A Beta Sample FCV Inlet Isolation Valve

Each sample extraction probe has an associated flow transmitter which indicates massflow. Massflow is indicated on LEDs for:

- VTP-FT-2201A FT-1 Stack Massflow Transmitter
- VTP-FT-2202A FT-2 Alpha Massflow Transmitter
- VTP-FT-2203A FT-3 Record Massflow Transmitter
- VTP-FT-2204A FT-4 Beta Massflow Transmitter

The stack flow measuring probe FE-1 sends total and static pressure signals to stack massflow transmitter FT-1. A resistance temperature detector sends a stack temperature signal to FT-1 as well. The output of FT-1 is converted to a differential pressure signal which is sent to a microprocessor where density compensation occurs for stack air temperature changes. This signal is proportional to the massflow rate. The output is displayed in standard cubic feet per minute (scfm).

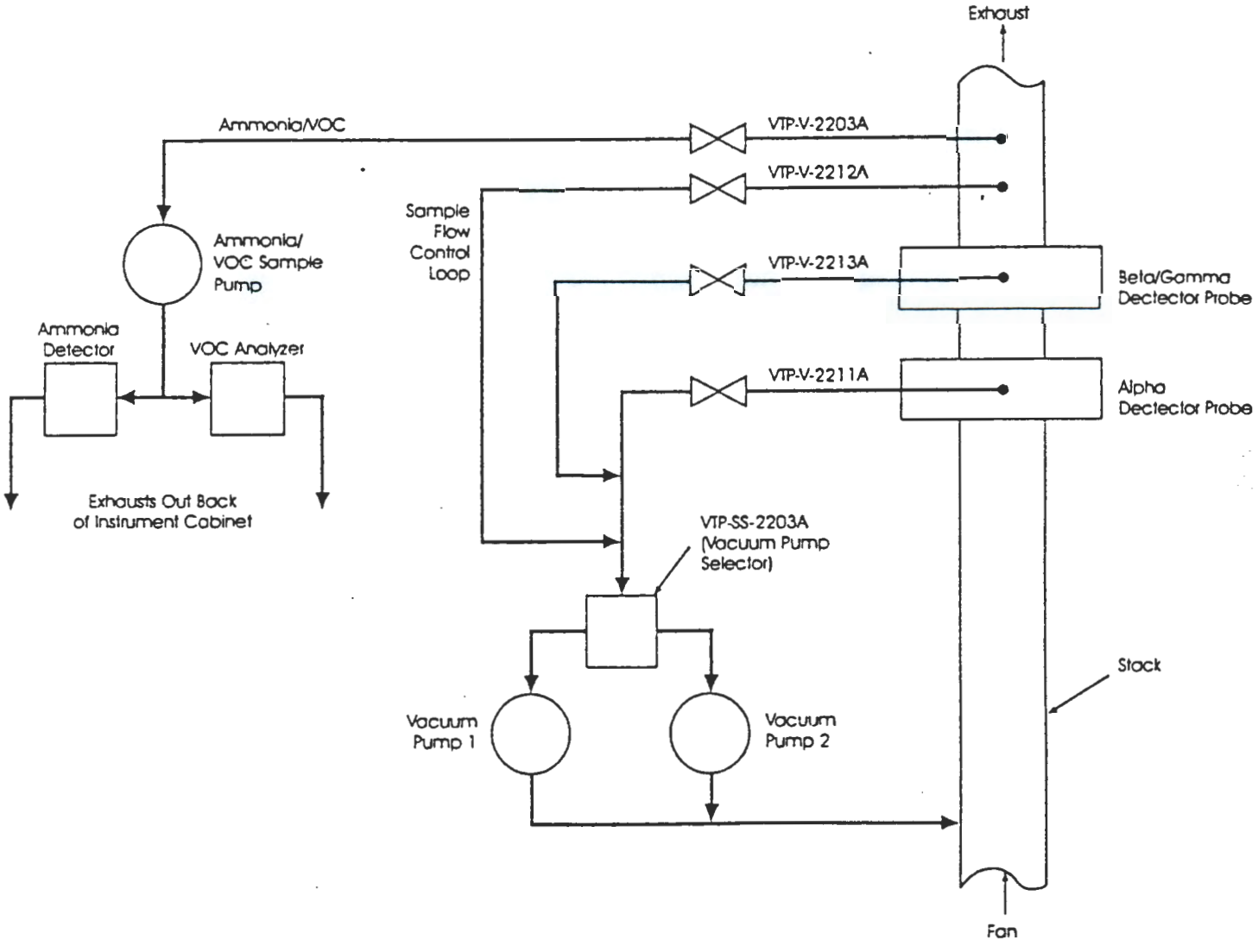

Figure 4 - Exhauster Air Sampling System Flowpaths

When power is provided to the instrument cabinet from the main power distribution panel, the white POWER ON indicator lamp on the outside of the cabinet door will be illuminated. Power is distributed to the air sampling system through VTP-SS-2210A (analyzer power switch) and VTP-SS-2211A (sample flow instrument power switch) to the vacuum pump control transformer.

Vacuum pumps 1 (VTP-P-2201A) and 2 (VTP-P-2202A) provide the means by which sample flows are extracted from the exhaust stack airflow. Two pumps are provided for redundant purposes and are controlled by an auto pump control system. Pump start/stop is interlocked with the stack exhauster fan. Should a shutdown of the exhauster fan occur, the vacuum pump controller will shut down the pumps. VTP-SS-2203A (Vacuum Pump Selector Switch) is alternated between the P1 and P2 positions to allow equal run times on the two pumps. Each pump has its own start switch inside the instrument cabinet. Pump indicator lights on the left cabinet door indicate which pump is running. Should a vacuum pump failure occur, a pump failure alarm will be activated and the pump failure indicator lamp will be illuminated. The other vacuum pump will automatically start without resetting the pump failure. The vacuum pump reset switch (VTP-PB-2201A) is a yellow push-to-reset button located inside the cabinet below VTP-SS-2203A. The pump failure light for the pump that started automatically will be extinguished and the pump failure light for the failed pump will be illuminated informing the operator which pump failed. A signal will be sent to the Data Logger indicating that a pump failure has occurred.

3. Location

The outside of the left instrument cabinet door contains three white lamps in the top row for POWER ON and VACUUM PUMP ON indications, three red lamps in the bottom row for PUMP FAILURE indications, and one yellow button (depress to stop) in the bottom row for VACUUM PUMP CONTROL (Figure 2).

The air sampling components (vacuum pumps, flow transmitters, isolation valves, VTP-SS-2203A, and VTP-SS-2210A) are inside the instrument cabinet on the left side while the analysis components (analyzers and VTP-SS-2211A) are on the right side (Figure 3).

O. Chessell Data Logger

1. Function

The Chessell data logger provides continuous monitoring and alarm functions for exhauster system parameters.

2. Description

The data logger continuously monitors the exhauster parameters listed in Table 1.

TABLE 1

#	Channel Function	Range or Alarm Setpoint
1	Stack flow rate	0 - 391 scfm
2	Stack temperature	0 - 150°F (no alarm)
3	Particulate alpha sample flow rate	0 - 3.0 scfm (no alarm)
4	Particulate record sample flow rate	0 - 3.0 scfm (no alarm)
5	Particulate beta/gamma sample flow rate	0 - 3.0 scfm (no alarm)
6	Sample temperature	0 - 150°F (no alarm)
7	Pump static pressure	0 to -136" WG (no alarm)
8	VOC analyzer concentration alert and alarm	0 - 4000 ppm (variable)
9	Ammonia concentration alert and alarm	0 - 1000 ppm
10	High alpha radiation	alarm
11	Alpha detector failure	alarm
12	High beta/gamma radiation	alarm
13	Beta/gamma detector failure	alarm
14	Stack fan status	on/off (no alarm)
15	Vacuum pump P-1 status	on/off (no alarm)
18	Vacuum pump P-2 status	on/off (no alarm)
19	Vacuum pump failure	alarm
21	Heater element failure	alarm
22	Heater overtemperature	alarm
23	HEPA inlet humidity alert and alarm	70% and 80%
24	HEPA inlet temperature	32 - 212°F
25	Low flow alarm/auto shutdown	150 scfm
26	High flow alarm/auto shutdown	250 scfm
27	Low tank pressure alarm/shutdown	-3" WG
28	High prefilter dp alarm/auto shutdown	10" WG
29	High HEPA filter dp alarm/auto shutdown	5.5" WG

Table 2 lists the inputs that are totalized by the data logger, but do not provide an alarm function.

TABLE 2

#	Input Function
T1	Stack flow.
T2	Particulate alpha sample flow.
T3	Particulate record sample flow.
T4	Particulate beta/gamma sample flow.

Table 3 lists the derived channel alarms that the data logger provides.

TABLE 3

#	Channel Function and Alarm Setpoint
D7	Deviation between stack flow and particulate alpha sample flow > ±10%.
D12	Deviation between stack flow and particulate record sample flow > ±10%.
D17	Deviation between stack flow and particulate beta/gamma sample flow > ±10%.

The data logger operator menus allow the operator to control certain basic recorder functions without having to use a password. The operator menus are arranged as a multi-level set of menus, the top level (main) menu appears when the home key is operated one or more times. The main menu allows access to a number of lower level menus. The operations most often used by the operator are described below. A more complete description of the data logger and menus is contained in Handout #1, *Chessell Installation and Operation Manual*.

Note: the alarms are set by an instrument technician.

- Acknowledging Alarms

  To acknowledge alarms, the operator must first depress the *"HOME"* key. To continue, the *"ALARM"* key is depressed giving the operator several options. To acknowledge an alarm, the *"ACKNOWLEDGE"* key is pressed. The data logger displays (prints out) the alarm. If other alarms exist at the same time, the operator selects the *"MORE"* key and repeats the process for any remaining alarms. The *"HOME"* key is depressed to return to the main menu. The *"MORE"* key must always be depressed to view the derived channels. The data logger toggles between normal and derived channels with each depress of the *"MORE"* key.

- Displaying Oldest and Newest Active Alarms

  To display the oldest active alarm, the operator must first depress the *"HOME"* key. To continue, the *"ALARM"* key and then the *"OLDEST"* key are depressed. The oldest active alarm is displayed. The *"HOME"* key is depressed to return to the main menu.

  To display the newest active alarm, the operator must first depress the *"HOME"* key. To continue, the *"ALARM"* key and then the *"NEWEST"* key are depressed. The newest active alarm is displayed. The *"HOME"* key is depressed to return to the main menu.

  In this mode, the operator can press the *"NEWEST"* or *"OLDEST"* key to move through the list.

- Generating Manual Status Log On Data Logger Chart

  To generate a manual status log on the data logger, the operator must first depress the *"HOME"* key. To continue, the *"MORE"* key is depressed giving the operator several options. The *"LOG"* key is depressed giving the operator a new set of options. The *"SEND"* key is depressed to start a printout of the current status of all parameters monitored by the data logger. The *"HOME"* key is depressed to return to the main menu.

Any actively alarming parameters will also be sent to an external strobe alarm (red) light. Work Plan TF-WP-94-010 describes the operational steps taken by the operator to respond to an alarm.

3. Location

The Chessell data logger is inside the instrument cabinet. The external alarm strobe light is on top of the instrument cabinet closest to the tank riser (Figure 3).

V. AUTOMATIC SHUTDOWNS, INTERLOCKS, AND COMMON FAULT ALARMS (EO-5 and 6)

A. Automatic Shutdowns, Interlocks, and Recommended Actions

The exhauster is interlocked with the RMCS truck such that an exhauster shutdown will cause an automatic shutdown of the truck. The following five conditions will cause an automatic exhauster shutdown:

- Stack flow less than 150 scfm.
- Stack flow greater than 250 scfm.
- Tank pressure less than -3" water gauge (W.G.)
- Prefilter pressure greater than 10" W.G.
- HEPA filter differential pressure greater than 5.5" W.G.

A message identifying which shutdown has occurred is printed out on the data logger followed by an automatic printout of an exhauster status log. Many more messages will be printed out following the status log including a message for automatic shutdown due to low flow that is generated when the fan slows to less than 150 scfm after shutting off. These alarms following the status log printout should be disregarded. The channel values displayed in the status log printout are the meaningful values that existed when the exhauster was shutdown. Several seconds after shutdown has occurred, the alarm strobe on top of the instrument cabinet will flash. The PIC must be notified of the exhauster shutdown and reason for the shutdown. The cause of the shutdown and the final status log printout values are required to be recorded on data sheets.

The Automatic Shutdown Reference Table in TF-WP-94-010 (see Table 4 below) identifies possible causes of an automatic shutdown and recommended actions.

TABLE 4

AUTOMATIC SHUTDOWN REFERENCE TABLE		
ALARM MESSAGE	POSSIBLE CAUSES	RECOMMENDED ACTION
AUTO SHTDN LOW FLOW ALARMED	HEPA FILTER ISOLATION VALVES NOT FULLY OPENED	FULLY OPEN ISOLATION VALVES
	PREFILTER PLUGGED	CLOSE UPSTREAM HEPA ISOLATION VALVE AND FLUSH PREFILTER WITH WATER
AUTO SHTDN HIGH FLOW ALARMED	FAN CONTROLLER FAILURE	
AUTO SHTDN LO TNK PR ALARMED	TANK PRESSURE IS LOW	REQUEST THAT TANK INLET BREATHER FILTER BE CLEANED/REPLACED
AUTO SHTDN PR-FLT DP ALARMED	PREFILTER PLUGGED	CLOSE UPSTREAM HEPA ISOLATION VALVE AND FLUSH PREFILTER WITH WATER
AUTO SHTDN HEPA DP ALARMED	HEPA FILTERS PLUGGED	REPLACE PLUGGED FILTER(S)

- After any automatic shutdown, the operator should record channels T1-T4 on the data sheet.

B. Common Fault Alarms and Recommended Actions

The conditions identified in Table 4 will cause the alarm strobe on top of the instrument cabinet, the common fault alarm (red) light on the right instrument cabinet door (Figure 2), and the alarm light on the data logger to illuminate. A message will be printed out on the data logger to inform the operator which alarm has occurred. Any channel with an active alarm condition (even if acknowledged) will have the value underlined in red on the chart printout. The Common Fault Alarm Reference Table in TF-WP-94-010 (see Table 5) identifies the alarm setpoints and recommended actions to take if an alarm exists after acknowledgement.

TABLE 5

COMMON FAULT ALARM REFERENCE TABLE		
ALARM MESSAGE	SET POINT	RECOMMENDED ACTION
08_1 TOC CONCENTRATION ALARMED	USER SET	OBTAIN GRAB SAMPLE AND FORWARD TO LAB.
08_2 TOC CONCENTRATION ALARMED	USER SET	MONITOR ALARM STATUS ON THE DATA LOGGER. IF ALARM 08_3 IS RECEIVED BEFORE CURRENT CORE SEGMENT HAS BEEN RETRIEVED, NO ACTION IS REQUIRED. IF ALARM 08_3 IS NOT RECEIVED, PERFORM THE FOLLOWING: 1) RETRIEVE THE CURRENT CORE SAMPLE. 2) OBTAIN A SECOND GRAB SAMPLE. 3) DISCONTINUE RMCS DRILLING. 4) SHUTDOWN EXHAUSTER TO STANDBY.
08_3 TOC CONCENTRATION NORMAL	USER SET	IF ALARM 08_4 IS RECEIVED BEFORE FULLY RETRIEVING CURRENT CORE SEGMENT, THE ACTIONS FOR ALARM 08_2 ARE NOT REQUIRED.
08_4 TOC CONCENTRATION ALARMED	USER SET	1) RETRIEVE CURRENT CORE SEGMENT. 2) DISCONTINUE RMCS DRILLING. 3) SHUTDOWN EXHAUSTER TO STANDBY.
09_1 AMMONIA CONCENTRATE ALARMED	350 PPM	MONITOR AMMONIA CONCENTRATION ON DATA LOGGER.
09_2 AMMONIA CONCENTRATE ALARMED	630 PPM	1) RETRIEVE THE CURRENT CORE SEGMENT. 2) DISCONTINUE RMCS DRILLING UNTIL ALARM 09_4 IS RECEIVED.
09_3 AMMONIA CONCENTRATE ALARMED	665 PPM	1) STOP RETRIEVAL OF CURRENT CORE SEGMENT. 2) SHUTDOWN EXHAUSTER TO STANDBY.
09_4 AMMONIA CONCENTRATE NORMAL	560 PPM	RESUME RMCS DRILLING.
10_1 ALPHA MTR RAD ALARM ALARMED	OPEN CONTACT	REQUEST HPT TO DETERMINE SOURCE OF ALARM FROM ALPHA 6A-1. CONTINUE OPERATION AT DISCRETION OF PIC AND HPT.

COMMON FAULT ALARM REFERENCE TABLE		
ALARM MESSAGE	SET POINT	RECOMMENDED ACTION
11_1 ALPHA MTR DET FAIL FAILED	OPEN CONTACT	REQUEST HPT TO DETERMINE SOURCE OF FAILURE FROM ALPHA 6A-1. CONTINUE OPERATION AT DISCRETION OF PIC AND HPT FOR UP TO 72 HOURS.
12_1 BETA MTR RAD ALARM ALARMED	OPEN CONTACT	REQUEST HPT TO DETERMINE SOURCE OF ALARM FROM AMS-4. CONTINUE OPERATION AT DISCRETION OF PIC AND HPT.
13_1 BETA MTR DET FAIL FAILED	OPEN CONTACT	REQUEST HPT TO DETERMINE SOURCE OF FAILURE FROM AMS-4. CONTINUE OPERATION AT DISCRETION OF PIC AND HPT FOR 72 HOURS.
19_1 PUMP FAIL FAILED	CLOSED CONTACT	VERIFY BY EXTERNAL LIGHTS THAT EXHAUSTER AUTOMATICALLY SWITCHES TO OTHER PUMP.
21_1 HEATER ELEMENT FAIL FAILED	OPEN CONTACT	SHUT OFF HEATER AND CONTINUE OPERATION AT DISCRETION OF PIC. IF HEPA INLET HUMIDITY ALARM OCCURS AFTER HEATER FAILURE, SHUT DOWN EXHAUSTER.
22_1 HEATER OVERTEMP ALM ALARMED	OPEN CONTACT (210°F)	SHUT OFF HEATER AND CONTINUE OPERATION AT DISCRETION OF PIC.
23_1 HEPA INLET HUMIDITY ALARMED	70%	IF HEATER IS OPERATIONAL INCREASE TEMPERATURE SET-POINT ON TC-3 BY 20°F UP TO A MAXIMUM OF 200°F. IF HEATER IS NOT OPERATIONAL, SHUTDOWN EXHAUSTER TO STANDBY.
23_2 HEPA INLET HUMIDITY ALARMED	80%	1) DISCONTINUE RMCS DRILLING. 2) SHUTDOWN EXHAUSTER TO STANDBY.
24_1 HEPA INLET TEMP ALARMED	180°F	SHUTOFF HEATER.
24_2 HEPA INLET TEMP ALARMED	195°F	1) DISCONTINUE RMCS DRILLING. 2) EXHAUSTER TO STANDBY.
$DO7_1$ ALPHA SAMP FLOW VAR ALARMED	± 10%	CONTINUE OPERATION AT DISCRETION OF PIC AND HPT.
$DO12_1$ RECORD SAMP FLOW VAR ALARMED	± 10%	CONTINUE OPERATION AT DISCRETION OF PIC AND HPT.
$DO17_1$ BETA SAMP FLOW VAR ALARMED	± 10%	CONTINUE OPERATION AT DISCRETION OF PIC AND HPT.

VI. EXHAUSTER OPERATION (EO-7)

Refer to the most current copy of TF-WP-94-010, Operate Rotary Mode Sampling System Exhauster in Tank 241-C-106, for detailed guidance concerning exhauster operations and troubleshooting. The purpose of each section of TF-WP-94-010 is described below. Even though other personnel are responsible for performing many of the steps to setup, startup, shutdown, and takedown the exhauster, the Operator must be knowledgeable in all facets of exhauster operations to ensure it is operated safely.

- Setup Exhauster

  This section contains instructions for setting up the exhauster for normal operations at a new tank.

- Startup Exhauster From Shutdown

  This section contains instructions for the initial start up of the exhauster following setup.

- Operate Exhauster

  This section contains actions to take for Automatic Shutdowns, Common Fault Alarms, cleaning the prefilter, and generating a manual status log on the data logger.

- Shutdown Exhauster To Standby

  This section contains instructions for shutting down the exhauster overnight or at the end of a work shift prior to completion of the current core sample.

- Startup Exhauster From Standby

  This section contains instructions for starting up the exhauster following a warm shutdown to standby.

- Place Exhauster Into Shutdown

  This section contains instructions for shutting down the exhauster following completion of sampling activities.

- Takedown Exhauster

  This section contains instructions for disconnecting and removing the exhauster after shutdown at the completion of sampling activities.

VII. REVIEW QUESTIONS

A. What are the functions of the exhauster?

B. What is the operator's principle responsibility?

C. What two conditions require the exhauster Operator to notify the PIC?

D. Why can't the exhauster be used on tanks containing flammable gases?

E. Why is smoking prohibited within 50 feet of the exhauster?

F. What is the function of the hydrogen/helium compressed gas?

G. What is the purpose of bonding?

H. What is the voltage inside the exhauster instrument cabinet?

I. What are the functions of the seal pot and where is it stored?

J. What is the main difference between the functions of a photohelic and a magnehelic pressure gauge?

K. What parameter does each photohelic pressure gauge measure and where is each located?

L. What problem could develop with the downstream filters if the in-line heater failed?

M. What is the maximum setting that should be used on the in-line heater and why?

N. Where is the in-line heater ON/OFF indicator lamp and what color is it?

O. What are the functions of the main power distribution panel and where is it located?

P. What analyzers continuously monitor the stack exhaust gases?

Q. What sequence of keys must be pushed to acknowledge an alarm on the Chessell Data Logger Recorder?

R. What five conditions will cause an automatic shutdown of the exhauster?

S. What are the recommended actions if a pump failure alarm occurs?

T. What are the recommended actions if a alpha sample flow variation alarm occurs?