1221268

SGW-55604
Revision 0

Description of Work for the Installation of Four Wells (C8787 to C8790) in the 100-HR-3 Groundwater Operable Unit, FY2013

Prepared for the U.S. Department of Energy
Assistant Secretary for Environmental Management

Contractor for the U.S. Department of Energy
under Contract DE-AC06-08RL14788

CH2MHILL
Plateau Remediation Company
P.O. Box 1600
Richland, Washington 99352

RECEIVED
AUG 09 2013
EDMC

Approved for Public Release;
Further Dissemination Unlimited

Date Received for Clearance Process (MM/DD/YYYY)
07/30/2013

INFORMATION CLEARANCE FORM

A. Information Category

- [ ] Abstract
- [ ] Summary
- [ ] Visual Aid
- [ ] Full Paper
- [ ] Journal Article
- [ ] Internet
- [ ] Software
- [x] Report
- [ ] Other _____

B. Document Number SGW-55604 Revision 0

C. Title
Description of Work for the Installation of Four Wells (C8787 to C8790) in the 100-HR-3 Groundwater Operable Unit, FY2013

D. Proposed Internet Address

E. Required Information (MANDATORY)

1. Is document potentially Classified? (●) No ( ) Yes
   Capelle, David P — D. P. Capelle
   Manager Required (Print and Sign)
   If Yes _____
   ADC Required (Print and Sign) ( ) No ( ) Yes Classified
2. Official Use Only (●) No ( ) Yes Exemption No. ____
3. Export Controlled Information (●) No ( ) Yes OUO Exemption No. 3
4. UCNI (●) No ( ) Yes
5. Applied Technology (●) No ( ) Yes OUO Exemption No. 5
6. Other (Specify) _____

7. Does Information Contain the Following:
   a. New or Novel (Patentable) Subject Matter? (●) No ( ) Yes
      If "Yes", OUO Exemption No. 3
      If "Yes", Disclosure No.: _____
   b. Commercial Proprietary Information Received in Confidence, Such as Proprietary and/or Inventions?
      (●) No ( ) Yes If "Yes", OUO Exemption No. 4
   c. Corporate Privileged Information? (●) No ( ) Yes
      If "Yes", OUO Exemption No. 4
   d. Government Privileged Information? (●) No ( ) Yes
      If "Yes", Exemption No. 5
   e. Copyrights? (●) No ( ) Yes If "Yes", Attach Permission.
   f. Trademarks? ( ) No (●) Yes If "Yes", Identify in Document.
8. Is Information requiring submission to OSTI? (●) No ( ) Yes
9. Release Level? (●) Public ( ) Limited

F. Complete for a Journal Article

1. Title of Journal

G. Complete for a Presentation

1. Title for Conference or Meeting _____
2. Group Sponsoring _____
3. Date of Conference _____
4. City/State _____
5. Will Information be Published in Proceedings? (●) No ( ) Yes
6. Will Material be Handed Out? (●) No ( ) Yes

H. Information Owner/Author/Requestor
Swanson, L Craig — L Swanson
(Print and Sign)

Responsible Manager
Capelle, David P — D. P. Capelle
(Print and Sign)

Approval by Direct Report to President (Speech/Articles Only) _____
(Print and Sign)

I. Reviewers

	Yes	Print	Signature	Public Y/N (If N, complete J)
General Counsel	[ ]			Y / N
Office of External Affairs	[ ]			Y / N
DOE	[ ]			Y / N
Other	[ ]			Y / N
Other	[ ]			Y / N
Other	[ ]			Y / N

J. Comments

Information Clearance Approval

Approved for Public Release; Further Dissemination Unlimited

APPROVED
By Shauna Adams at 11:30 am, Jul 31, 2013

If Additional Comments, Please Attach Separate Sheet

A-6001-401 (REV 5)

SGW-55604
Revision 0

Description of Work for the Installation of Four Wells (C8787 to C8790) in the 100-HR-3 Groundwater Operable Unit, FY2013

Document Type: TR

L. C. Swanson
CH2M HILL Plateau Remediation Company

Date Published
July 2013

Prepared for the U.S. Department of Energy
Assistant Secretary for Environmental Management

Contractor for the U.S. Department of Energy
under Contract DE-AC06-08RL14788

CH2MHILL
Plateau Remediation Company
P.O. Box 1600
Richland, Washington 99352

APPROVED
By Shauna Adams at 11:31 am, Jul 31, 2013

Release Approval Date

Approved for Public Release;
Further Dissemination Unlimited

TRADEMARK DISCLAIMER

Reference herein to any specific commercial product, process, or service by tradename, trademark, manufacturer, or otherwise, does not necessarily constitute or imply its endorsement, recommendation, or favoring by the United States Government or any agency thereof or its contractors or subcontractors.

This report has been reproduced from the best available copy.

Printed in the United States of America

Contents

1. Introduction **1**

2. Background **3**

2.1 Historic Site Operations and Resulting Contamination 3

2.1.1 Stratigraphic Setting 4

2.1.2 Hydrogeology 6

2.2 Contaminants of Potential Concern 6

3. Description of Work Activities **8**

3.1 Well Site Preparation 8

3.2 Drilling 8

3.3 Sampling Requirements 9

3.4 Well Construction 12

3.4.1 Screen Riser and Sump 12

3.4.2 Annular Seal & Filter Pack 12

3.4.3 Wellhead 13

3.5 Well Development 17

3.5.1 Initial Well Development 17

3.5.2 Final Well Development 17

3.6 Final Report 18

4. Waste Management **19**

4.1 Vadose Zone Waste 19

4.2 Groundwater-Contacted Waste 19

4.3 Purgewater 19

5. Quality Assurance **20**

6. Schedule **20**

7. General Requirements **21**

7.1 Safety & Health 21

7.2 Technical Procedures/Specifications 21

8. Project Documentation **23**

9. References **24**

10. Distribution **28**

Tables

Table 1 - Well Identification and Location Summary 2
Table 2 - Geologic Contacts, Depth to Water, and Estimated Total Depth for the Wells 4
Table 3 - Well Construction Parameters 9
Table 4 - Summary of Well Sampling for 100-D Wells 11
Table 5 - Summary of Well Sampling for 100-H Wells 11

Figures

Figure 1 - Proposed Four New Well Locations in the 100-D/DX and 100-H Areas 2
Figure 2 - Generalized Well Construction for the 100-D Wells 14
Figure 3 - Generalized Well Construction for the 100-H RUM Wells 15
Figure 4 - Diagram Showing Configuration of Access Port in Protective Casing 16

ACRONYMS

ags	above ground surface
bgs	below ground surface
BTR	Buyer's Technical Representative
CERCLA	*Comprehensive Environmental Response, Compensation, and Liability Act of 1980*
CFR	*Code of Federal Regulations*
CRR	Cultural Resources Review
CHPRC	CH2M Hill Plateau Remediation Company
CGET	CHPRC General Employee Training
DOE	U.S. Department of Energy
DOW	Description of Work
EPA	U.S. Environmental Protection Agency
ETF	effluent treatment facility
ft	foot (feet)
FS	Feasibility Study
FY	Fiscal Year
gpm	gallons per minute
GPR	Ground Penetrating Radar
HASQARD	Hanford Analytical Services Quality Assurance Requirements Document
ID	Identification
ISRM	In-Situ Redox Manipulation
MCL	maximum contaminant level
MSU	modular storage unit
MSW	miscellaneous solid waste
NPE	no potential effect
NTU	nephelometric turbidity units
OU	Operable Unit
QA	Quality Assurance
RAO	remedial action objectives
RCT	Radiation Control Technician
RI	Remedial Investigation
RI/FS	Remedial Investigation/Feasibility Study
ROD	Record of Decision
RO/RO	Roll On/Roll Off
RUM	Ringold Upper Mud (Unit)
SAP	Sampling Analysis Plan
TBD	to be determined
TD	total depth
WAC	*Washington Administrative Code*
WDOH	Washington Department of Health
QAPjP	Quality Assurance Project Plan

1. Introduction

This description of work (DOW) presents performance details and controls for field activities associated with the installation, sampling, and testing of two monitoring wells and two pump-and-treat extraction wells to be installed in the 100-HR-3 Groundwater Operable Unit (OU) in proximity of 100-D and 100-H Areas of the Hanford Site in fiscal year (FY) 2013 and possibly FY 2014. The four new well installations will maximize plume capture, minimize contamination spread, increase groundwater treatment volume, and delineate contaminant plumes. The wells will be installed as part of the *Comprehensive Environmental Response, Compensation, and Liability Act of 1980* (CERCLA) preferred remedial alternative set forth in the *Record of Decision for the 100-HR-3 and 100-KR-4 Operable Units Interim Remedial Actions, Benton County, Washington* (EPA/ROD/R10-96/134, 1996) (referred to herein as ROD).

The existing suite of wells are used to monitor, extract, and inject treated groundwater in support of the HX and DX pump-and-treat systems that are operating as required by the ROD, and as implemented in accordance with the *Remedial Design Report and Remedial Action Work Plan for the 100-HR-3 and 100-KR-4 Groundwater Operable Units Interim Action* (DOE/RL-96-84, 2003). The present contaminant concentrations of hexavalent chromium exceed federal and state maximum contaminant levels (MCLs), state groundwater cleanup standards for use of the groundwater as a drinking water source, and the ambient water quality criteria for the protection of aquatic organisms.

Activities to be carried out during the installation of the new wells will include well drilling, soil and water sampling, and well-construction and development as part of the investigation of multiple chromium plumes within the 100-HR-3 OU as described in DOE/RL-2013-35, *100-HR-3 Groundwater Operable Unit Well Installation Sampling and Analysis Plan*. This work is being done in accordance with DOE/RL-2013-35-ADD1, Rev 0.

Drilling activities will consist of advancing the two 100-D boreholes about 7 ft into the Ringold upper mud unit (RUM), a semi-confining layer that is present throughout the 100 Areas. The two 100-H wells will be drilled and completed in a water-bearing zone in the RUM, to determine if contaminants have penetrated this unit. Sampling activities for all wells will include collection of soil grab and split spoon samples, and water sample during drilling and after well development.

Well completion activities consist of installing 6-inch diameter stainless steel monitoring and extraction wells. The well screens for the 100-D wells are to be placed in the unconfined aquifer extending from the top of the RUM to or above the high water mark in the vadose zone. The 100-H wells will be screened in the RUM at the first water producing interval. Well development will include surging in the well screen during sand pack installation and over-pumping after the well has been built.

All drilling, decommissioning, and well construction will be performed by a drilling subcontractor. Sampling and testing will be performed by CH2M Hill Plateau Remediation Company (CHPRC) and affiliates. Table 1 lists the wells construction identification numbers and names, and provides location information. Figure 1 manifests the location of the four proposed wells.

Table 1 - Well Identification and Location Summary

Well ID	Well Name	Area	Type	Easting (m)	Northing (m)	Elevation (m)
C8787	199-H4-90	100-H	Monitoring	577922.80	152592.37	129.8
C8788	199-H4-91	100-H	Monitoring	578126.40	152524.60	127.9
C8789	199-D5-153	100-D	Extraction	5733329.74	151992.93	142.6
C8790	199-D5-154	100-D	Extraction	573632.10	151830.87	143.2

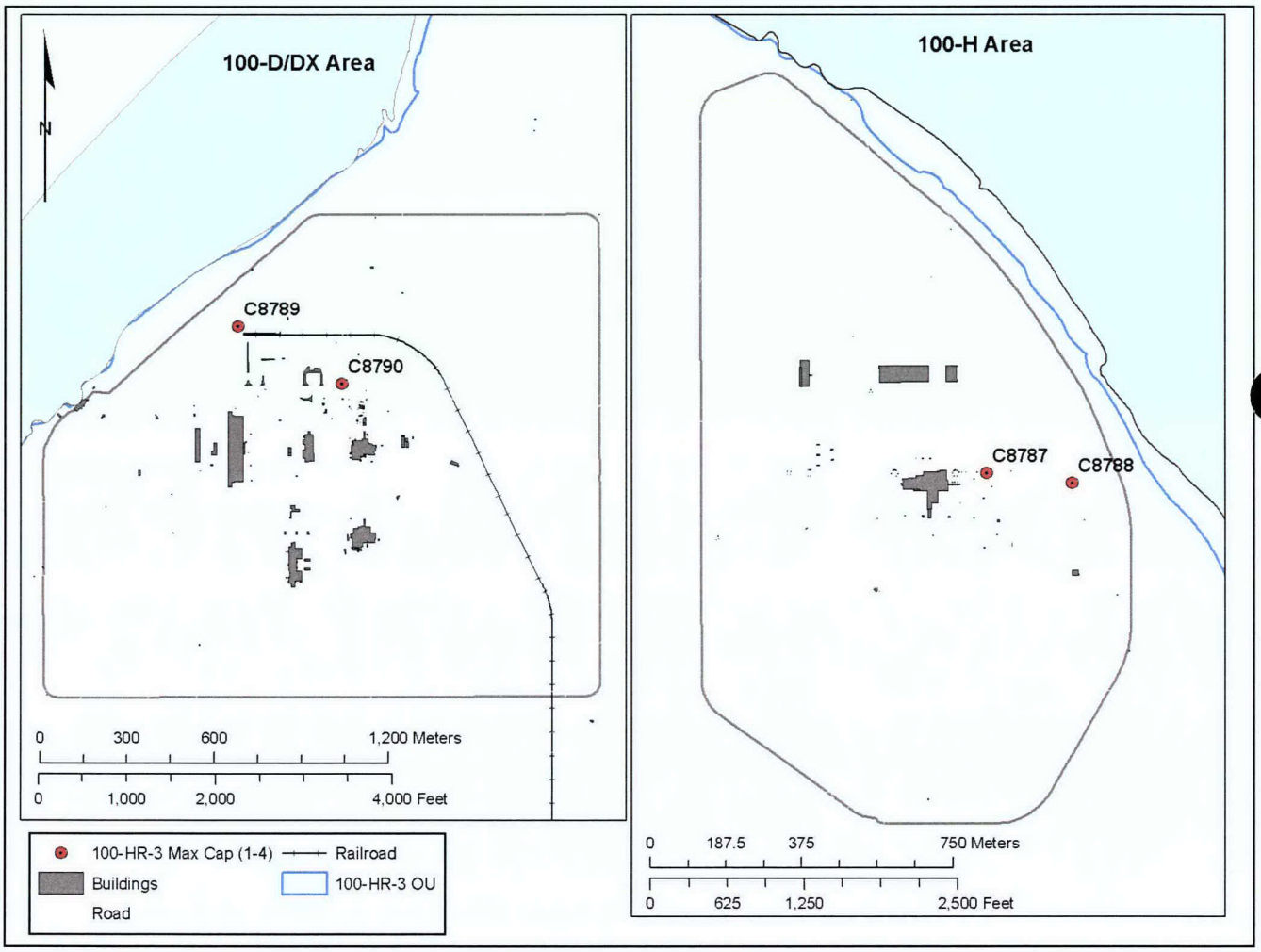

Figure 1 - Proposed Four New Well Locations in the 100-D/DX and 100-H Areas

2. Background

The following section discusses previous work activities and regulatory decisions associated with the 100-HR-3 groundwater OU. General summaries of the site geology and hydrogeology and contaminants of concern relevant to the planned wells are presented.

2.1 Historic Site Operations and Resulting Contamination

Between 1943 and 1963, nine plutonium production reactors were built along the Columbia River. Production of special nuclear materials for national defense was the core function of the 100 Area production reactors, with most of the associated infrastructure and capabilities in those areas centered on performing that task (DOE/RL-2008-46-ADD1, *Integrated 100 Area Remedial Investigation/Feasibility Study Work Plan Addendum 1: 100-DR-1, 100-DR-2, 100-HR-1, 100-HR-2, and 100-HR-3 Operable Units*).

The 100-HR-3 groundwater OU is located in the north-central part of the Hanford Site, approximately 28 miles north-northwest of the city of Richland, Washington. The OU includes the 100-D and H reactor areas and the area between the reactors informally known as the "Horn" (Figure 1).

As discussed in DOE/RL-2008-46-ADD1, most groundwater contamination in the 100-HR-3 groundwater OU originated from cooling systems used in the reactors. Sodium dichromate salts and aqueous solutions of varying concentrations were routinely added to the cooling water stream in order to reduce the corrosivity of the water, typically to concentrations of approximately 2 mg/L hexavalent chromium. After passing through the reactor, the spent cooling water was discharged to concrete basins, where it was held for a number of hours before being piped back to the Columbia River. These basins periodically leaked leading to widespread mounding of the aquifer up to 3 m (~10 ft) above natural static water level, which contributed to the growth of the contamination plumes in 100-HR-3 OU.

Contamination is also associated with a large scale infiltration test that was conducted in the 100-D Area from March through June 1967 (BNWL-CC-1352, *Ground Disposal of Reactor Coolant Effluent*). Approximately 3.4 billion gallons of reactor coolant effluent was disposed directly to the ground at the 100-D emergency crib trench. This test raised the water level in the unconfined aquifer an additional 0.3 to 3 m (1 to 10 ft) and significantly contributed to migration of hexavalent chromium from the 100-D Area across the Horn and to the 100-H Area (DOE/RL-2008-46-ADD1). Groundwater mounding associated with the leaking 182-D reservoir may have contributed to the separation of contamination in the 100-D Area into northern and southern plumes.

Hexavalent chromium concentrations in the 100-D Area are locally much higher than 2 mg/L. This suggests that there may have been unknown leaks or spills of concentrated hexavalent chromium solutions that reach groundwater. The current conceptual models suggest that the vadose zone contains significant amounts of hexavalent chromium which continue to feed contaminants into the groundwater 40 years after termination of reactor operations.

Currently, the hexavalent chromium groundwater plumes in the 100-HR-3 OU are discharging to the Columbia River and potentially impacting the river's ecosystem. Hexavalent chromium is locally upwelling into potential salmon redds, and shoreline seeps are discharging into riparian habitat during low-river stages (DOE/RL-2008-46-ADD1).

The initial 100-HR-3 pump and treat system was installed in 1997 to reduce the levels of hexavalent chromium in groundwater discharging to the Columbia River, focusing on the northern 100-D Area plume and the main plume in the 100-H Area. Between 2000 and 2003, the 100-HR-3 system was augmented by the phased installation of the In-Situ Redox Manipulation (ISRM) treatment zone in 100-D.

The ISRM was a permeable reactive groundwater barrier. Active treatment of the 100-D Area contaminant plume was further expanded in 2004 with the addition of a second pump and treat system, the DR-5 system. The DR-5 system was designed to supplement the 100-HR-3 system by capturing contamination from the southern portion of the northern 100-D hexavalent chromium plume. It operated until March 2011, when it was replaced by the greatly expanded DX system. Similarly, in April 2011 the 100-HR-3 pump-and treat system was replace by the DX and HX systems.

The DX pump-and-treat system formally entered service December 17, 2010 and was operational in 2011 treating hexavalent chromium contaminated groundwater from the northern and southern 100-D plumes. The HX pump-and-treat system was fully operational by October 1, 2011, focusing primarily on hexavalent chromium contamination in the 100-H Area and the Horn.

The installation of four new wells discussed in this document will support the objectives discussed in *Recommendations and Technical Justification for New and Replacement Wells and Re-alignment of Existing Wells Associated with Interim Remedial Actions at 100-D/H Area*, SGW-54542. Those objectives are monitoring and remediation to protect the river, contaminant mass removal, and contaminant delineation.

2.1.1 Site Stratigraphy and Hydrogeology

The following section summarizes the stratigraphic setting and hydrogeologic conditions in the vicinity of the new wells. Table 2 provides a listing of estimated contact depths for each borehole planned in this document, based on contour maps developed from the nearest available well logs.

Table 2 - Geologic Contacts, Depth to Water, and Estimated Total Depth for the Wells

Well ID	Well Name	DTW (ft bgs)[a]	Ringold/Hanford Contact (ft bgs)	Depth to RUM[b] (ft)	Est. Total Depth (ft)
C8787	199-H4-90	45	50	50	105
C8788	199-H4-91	35	50	50	105
C8789	199-D5-153	80	55	100	108.5
C8790	199-D5-154	80	55	105	115.5

Note: Depths can vary by 3 to 5 ft, plus or minus
bgs = all depths below ground surface
a = Depth to Water (DTW) estimated using Fall 2012 values
b = RUM refers to Ringold Upper Mud

2.1.2 Stratigraphic Setting

The stratigraphy of 100-HR-3 is consistent with the regional geologic setting, composed of unconsolidated sedimentary deposits overlying the Columbia River Basalt Group and associated Ellensburg Formation interbeds. Units overlying the basalt include Holocene alluvial, eolian, and anthropogenic deposits, the Pleistocene Hanford formation, and the Miocene-Pliocene Ringold Formation.

The ground surface in the 100-HR-3 groundwater OU reflects the influence of the Pleistocene Missoula Floods (discussed below) and subsequent reestablishment and migration of the Columbia River through the Hanford Area. Surface features that reflect the catastrophic Missoula floods in the area include giant

ripple marks and gravel bars. Well-defined curvilinear channel trace features are visible on both sides of the existing river, indicating that the channel has repeatedly migrated across the valley floor. Additionally, eolian sands may be present to depths of less than 10 ft. Contact depths in the Horn area depend greatly on the degree of Pleistocene flood and Holocene river erosion that has taken place.

Depending on proximity to former facilities and/or remediation sites, the ground surface of the 100-D Area has been extensively disturbed by grading, construction, and demolition work. Disturbed sediments can extend more deeply, but in general range from 1 to 15 ft below ground surface (bgs) in disturbed areas.

Underlying any Holocene deposits, the Hanford formation is a Pleistocene, cataclysmic flood and inter-flood deposit unit resulting from the Missoula Floods 15,000 to 12,000 years ago. The Hanford formation can be loosely divided into three facies: gravel-dominated, sand-dominated, and slackwater (WHC-SD-EN-TI-011). In the 100 Areas, the gravel facies is most common. The gravel-dominated Hanford formation is highly basaltic, ranging from approximately 50% to 80% basalt (WHC-SD-EN-TI-011). Limited examples of in-situ Hanford formation (from outcrop or excavations) have shown common open-framework textures.

Discrete sand lenses are present in 100-D/H, which may form preferential flow paths or collection zones for vadose-zone contaminants. Borehole logs have reported these sand lenses to be nearly 100% basalt (for example, at well 199-D4-96). However, WHC-SD-EN-TI-132 reports that in general, Hanford formation matrix sands in the vicinity of 100-HR-3 are less basaltic than elsewhere on the site.

Sediments of the Hanford formation within the 100-D/DR Facility Area are expected to extend to between 45 ft and 60 ft bgs towards the northern end of the Facility Area and to between 60 and 75 ft bgs towards the southern end of the Facility Area.

Sediments of the Hanford formation within the broader 100-H Facility Area are expected to extend to between 37 ft and 66 ft below bgs near the river and to between 49 and 62 ft bgs towards the southern end of the Facility Area.

Disconformably underlying the Hanford formation, the Ringold Formation Unit E is composed of fluvial matrix-supported gravels and sands with intercalated fine to coarse sand and silt lenses. Unit E lithology is between 35% and 90% felsic consisting mainly of metamorphic, intermediate volcanics and felsic volcanics (WHC-SD-EN-TI-011). Silica and/or carbonate cementation is/are highly variable depending on depth and location.

The contact between the Hanford formation and Ringold Unit E can be difficult to distinguish. Borehole logs suggest that the Hanford forms a disconformable, gradational (i.e. reworked) contact with the Ringold Unit E, with felsic content and cementation increasing with depth. In general, Ringold Unit E gravels are more rounded, may be more cemented, and show a distinct oxidized brown color as compared to the Hanford formation (WHC-SD-EN-TI-132). Ringold Unit E is mostly absent east of the 100-D Area, except for isolated erosional remnants throughout the Horn area. Where Unit E does not exist, the Hanford formation sediments directly overlay the Ringold Upper Mud (RUM).

The RUM is primarily composed of variably cemented overbank flood deposits and paleosols. Primarily composed of silt and clay, the RUM is typically described as various shades of brown to olive-brown. Within the RUM, thin sand-to-gravel lenses form discontinuous confined-to-semi-confined aquifers. The RUM is expected to be encountered between 100 and 105 ft bgs in the vicinity of the wells in 100-D Area (Table 2). The RUM is expected to be encountered around 50 ft bgs in the vicinity of the wells in 100-H Area (Table 2). At some locations in the 100-HR-3 area, the lower Hanford formation contains isolated but numerous rip-up clasts of the RUM (WHC-SD-EN-TI-132). Drilling 5-7 ft into the RUM at the 100-D

wells should confirm that the lower confining layer has been reached, as opposed to an isolated rip-up clast.

2.1.3 Hydrogeology

The vadose zone at the project location is composed of Holocene material and the sands, gravels and boulders of the Hanford formation. The unconfined aquifer beneath the project area is found within the Hanford formation and within Unit E of the Ringold Formation. Unit E pinches out east of the 100-D Area and reappears as thin remnants throughout the remainder of the "Horn" area. The base of the unconfined aquifer is silt and silty clay of the RUM.

Depths to groundwater for the new wells are specified in Table 2. The depth to groundwater at the new wells is expected to be 80 to 85 ft bgs at the proposed locations within 100-D Area. The depth to groundwater at the new 100-H wells is expected to range from 35 to 45 ft bgs. All depths and thicknesses are estimates and may vary due to the nature of the depositional/erosional environment along the riverbank as well as seasonal and diurnal fluctuations in the water table.

2.2 Contaminants of Potential Concern

The primary contaminants in groundwater at 100-HR-3 OU are hexavalent chromium, strontium-90, and nitrate. Uranium is present in a small, localized area near the 183-H Solar Evaporation Basins. Tritium is also present in groundwater at levels slightly below MCLs at 100-D, as a result of reactor operations in that area (DOE/RL-2010-95, REV 0 A) (DOE/RL-2011-118, Rev. 0).

- **Hexavalent Chromium:** Originated from planned discharges of chromium-treated cooling water to the retention basins during reactor operations and to the 116-DR-1&2 Trench during the 1967 infiltration test. Other sources of contamination were from planned and unplanned releases of concentrated sodium dichromate solution prior to entering the reactor. Hexavalent chromium is currently in the unconfined aquifer at the 100-D and 100-H reactor areas, and across the Horn. Hexavalent chromium is also present in the first water bearing unit of the Ringold Formation upper mud (RUM), a confined or semi-confined aquifer at 100-H.

- **Strontium-90:** Produced as a fission product in reactor fuel during the plutonium production operations. Contamination of water by fission products occurred commonly in the reactor fuel storage basins; water was released from the fuel storage basins by unplanned releases (i.e., leaks and spills), as well as during planned releases (e.g., basin water overflow during reactor defueling operations). In addition, reactor cooling water became contaminated with fuel and fission product residues during reactor fuel failure incidents. Strontium-90 is present near the reactors at both 100-D and 100-H, associated with the fuel storage basins.

- **Nitrate:** The primary source of nitrate in 100-HR-3 is nitric acid used during reactor operations as a decontamination solution. Nitric acid and other decontamination solutions were disposed in cribs, trenches, and French drains near the building where they were used. These solutions were also occasionally combined with reactor cooling water and discharged to the river (WHC-SD-EN-TI-181, *100-D Area Technical Baseline Report*). Another reactor operation related source is from oxidation of ammonia discharged in the condensate solution. Secondary contributors include septic systems, sewer lines, and former agricultural practices. Nitrate is present in 100-D and 100-H reactor areas.

- **Tritium:** The primary sources of tritium are reactor operations at 105-D and 105-DR. Historically, tritium was detected in the unconfined aquifer at concentrations greater than the DWS of 20,000 pCi/L in several wells at 100-D. Tritium is not present in the horn or 100-H

above the DWS. 100-N has also contributed to the tritium now found in the unconfined aquifer underlying the southern portion of 100-D. Tritium has not been detected above the DWS of 20,000 pCi/L in wells/piezometers completed in the first water-bearing unit of the RUM.

- **Uranium:** Uranium has historically been detected in groundwater near the 183-H Solar Evaporation Basins. The 183-H Solar Evaporation Basin site is a RCRA TSD unit consisting of four basins. The basins were originally part of the 183-H water treatment facility. Four of the remaining basins were then used from 1973 to 1985 to evaporate various liquid waste streams, including neutralized, spent acid etch solutions containing technetium-99 and uranium. The basins were demolished in 1995 and soil was removed from beneath the site.

3. Description of Work Activities

Activities to be conducted at each well site include site preparation, drilling, sampling, well construction, and well development. All activities described in this document will be conducted in accordance with the guidelines and requirements set forth in *Drilling, Remediating, and Decommissioning Resource Protection Wells, and Geotechnical Soil Borings* (GRP-EE-02-14.1) and shall conform to minimum resource protection well standards as defined in *Washington Administrative Code* (WAC) 173-160, "Minimum Standards for Construction and Maintenance of Wells". The WDOH (2008), *The Department of Energy Hanford Site Radioactive Air Emissions License #FF-01*, Enclosure 3, "ALARACT Agreements," ALARACT 18, "Environmental Restoration Program ALARACT Demonstration for Drilling," shall also apply. A legal record of well site activities will be maintained by a third-party Field Geologist and recorded in daily field activity reports.

3.1 Well Site Preparation

Drilling sites will be accessed by existing roads wherever possible and wherever limited access roads have been constructed as necessary. A drill pad of sufficient size for operations and limited access roads has been constructed for each well. Grub surveys have been performed by radiation control technicians for each site prior to the drill pad and access road construction. Ground penetrating radar surveys have also been conducted as necessary and excavation permits obtained as part of site preparation prior to drilling.

3.2 Drilling

The drilling contractor shall be responsible for complying with well drilling and construction standards defined in WAC 173-160 and applicable CHPRC procedures. The drill rig and all down-hole equipment shall be high temperature and pressure washed prior to use between wells, including all wells located within the same operable unit, to minimize potential for cross-contamination. Lubricant used for making up drill strings or other down-hole tools shall be environmentally compatible. Hydrocarbon-based lubricants are not acceptable.

Any combination of the drilling methods describe in the Well Drilling Services Basic Ordering Agreement PART I Article 3.2 may be utilized at an individual well/boring location.

The wells will be drilled 5 to 7 ft into the RUM to allow completion of a well that screens the entire thickness of the unconfined aquifer and extends above the high water mark as applicable. Estimated total drilling and construction depths are presented in Table 3. The actual total depth (TD) of the wells will be determined by CHPRC's Field Geologist or Hydrogeologist and may vary from anticipated depths depending on the varying hydrogeologic conditions encountered. The nominal casing diameter for the borehole at TD shall be no less than 10 inches to allow completion of a 6-inch diameter well. This assures that the wells retain a minimum 2-inch annulus called for under WAC 173-160.

Drilling aids such as bentonite, other clay-based agents, water, or any foreign matter capable of affecting the characteristics of the sediment samples or ground water will not be placed in the wells without prior approval of CHPRC.

The drilling contractor will be responsible for performing a straightness test prior to beginning well completion as required by WAC 173-160. The test will be conducted by running a 20-ft-long section of pipe that is a diameter 1-in smaller than the inner diameter of the temporary casing to the bottom of the boring. The pipe must freely pass without binding to declare the well straight. The test for straightness shall be made in the presence of the CHPRC Buyer's Technical Representative (BTR) or delegate.

Drilling activities for all wells have been evaluated to pose both low radiological and chemical risk based on the site history, sampling of nearby waste sites and existing wells. Radiological-control and industrial hygiene support are anticipated to consist of daily "AM/PM" checks as long as current radiological and chemical risks remain unchanged. Any other coverage will be specified under the radiological permits.

Table 3 - Well Construction Parameters

Well ID	Well Name	DTW (ft bgs)*	Drill Depth (ft bgs)	Screen Interval (ft bgs)	Filter Pack Interval (ft bgs)	Bentonite Pellet Seal (ft bgs)	Bentonite Crumbles/ Grout Seal (ft bgs)	Concrete Surface Seal (ft bgs)
C8787	199-H4-90	45	105	85 - 100	105 - 80	80-75 35-30	30-10 75-35	10 - 0
C8788	199-H4-91	35	105	85 - 100	105 - 80	80-75 35-30	30-10 75-35	10 - 0
C8789	199-D5-153	80	108.5	70 – 101.5	65 - 108.5	65 - 60	60 - 10	10 - 0
C8790	199-D5-154	80	115.5	70 – 108.5	65 – 115.5	65 - 60	60 - 10	10 - 0

Note: Depths can vary by 3 to 5 ft
bgs = below ground surface
* = Depth to water (DTW)

3.3 Sampling Requirements

All data collection requirements for this project meet the requirements established by DOE/RL-2013-35 ADD1, *100-HR-3 Groundwater Operable Unit Well Installation Sampling and Analysis Plan*. A sampling summary is found in Tables 4 and 5 for 100-D and 100-H, respectively. Sampling strategies outlined in this section are common to all wells under this DOW.

Grab samples for archive purposes will be collected from drill cuttings every 5 feet and at changes in lithology or at depths where unusual conditions are encountered (as determined by the Field Geologist) for lithologic descriptions from surface to total depth. Archive grab samples will be collected in one-pint glass jars and chip trays. Borehole logs shall follow the specifications in GRP-EE-01-7.0, *Geologic Logging*.

Split spoon samples for soil physical property analysis will be collected from the top and bottom of the aquifer, the water producing zone in the RUM, and from the mud itself at the depths specified in Tables 4 and 5. If a split spoon sample cannot be successfully collected due to the drilling conditions (i.e., the presence of oversize cobbles), a field decision to collect a grab sample (in addition to the previously collected split-spoon sample) can be made by the CHPRC project lead. Alternatively, an additional split-spoon may be driven at the next available depth interval. Supplementary geologic split-spoon samples may be requested by CHPRC's Field Geologist at any time in order to better catalog the lithology of the borehole, particularly to clarify the depth of contacts.

Groundwater samples will be collected at depths shown in Tables 4 and 5, but include the top and bottom of the unconfined aquifer, the RUM semi-confined aquifer, and at the end of well development. The primary analytes of interest are Cr(VI), total chromium, strontium-90, nitrate, tritium, and a set of anions and carbonates. The samples may not be collected before three well volumes have been purged and water chemistry has stabilized within 10% variance over three consecutive measurements (GRP-FS-04-G-012, *Groundwater Sampling*; and GRP-FS-04-G-004, *Operational Monitoring Groundwater Sampling*).

During groundwater sampling, if the borehole cannot sustain sufficient water production in the open hole to collect a sample, or excessive sediment is damaging the pump, a telescoping screen will be set and groundwater pumped from inside the screen. If water still cannot be produced as needed, the Project Technical Lead will be contacted for consultation and direction.

The Contractor will provide low-flow pumps (1-3 gpm) with a variable frequency drive (VFD) for groundwater sampling (such as the Rediflo2) to facilitate collection of quality groundwater samples during the "drill-and-test" portion of the field activities.

The planned groundwater monitoring wells will be geophysically logged with a high-resolution, spectral gamma-ray logging system to determine the vertical distribution and concentration of gamma-emitting radionuclides. Soil moisture will be determined using a neutron-moisture logging tool. The monitoring wells will be logged before the temporary casing is telescoped (if applicable) and/or at the point of total depth.

All drill cuttings and all purgewater will be handled and managed as specified in Section 4.0 (Waste Management).

Drilling activities for all wells are currently evaluated to pose low radiological and chemical hazard based on the CHPRC *Radiological Hazard Screening* (RHSF-GW-13-014). Radiological-control support and industrial-hygiene support is anticipated to consist of daily morning and evening checks as long as radiological and chemical risks remain unchanged.

A legal record of well site field activities will be maintained by the buyer's representative Field Geologist and recorded in daily field activity reports. The Field Geologist will collect grab samples for archives, examine material from the boreholes, and prepare borehole logs as specified in GRP-EE-01-7.0, *Geologic Logging*. The Geologist will also collect grab samples for sieve analyses at 5 ft intervals though the saturated zone, compositing samples from the top of the aquifer for analysis, and another set of composited samples from the bottom of the aquifer for analysis. Sieve analyses shall be conducted in accordance with GRP-EE-05-1.21, *Particle Size Distribution of Soil-Wet Sieve Analysis.*

Table 4 - Summary of Well Sampling for 100-D Wells

Sample Collection Methods	Sample Location	Maximum Investigation Depth	Geologic Media	Soil Physical Properties, Split Spoon		Groundwater	
				Grain Size and Hydraulic Conductivity	Permeability	During Drilling	Well Screen Interval
Borehole Sampling	Extraction Well Borings 199-D5-153 (C8789) and 199-D5-154 (C8790)	120 ft bgs, or the base of the unconfined aquifer, plus 5 ft, whichever is deepest	Grab sample every 5 ft Archival samples at lithologic changes	One each at the top and bottom of the unconfined aquifer	None	One each at the top and bottom of the unconfined aquifer Analytes: Hexavalent Chromium (Field Measurement)	One sample after well development is complete Analytes: Bicarbonate, Carbonate, Calcium, Hexavalent Chromium, Total Chromium, Magnesium, Nitrate, Potassium, Strontium-90, Sulfate, and Tritium
				Split Spoons Estimated Depths (ft bgs): 199-D5-153: 80.0-82.5; 100.0-102.5 199-D5-154: 80.0-82.5; 106.0-108.5			

Number of split spoon samples	4
Approximate number of field quality-control split spoon samples (one per borehole)	2
Approximate number of groundwater samples	6
Approximate number of groundwater field quality-control samples (one per well)	2

Table 5 - Summary of Well Sampling for 100-H Wells

Sample Collection Methods	Sample Location	Maximum Investigation Depth	Geologic Media	Split Spoon		Groundwater	
				Grain Size and Hydraulic Conductivity	Permeability	During Drilling	Well Screen Interval
Borehole sampling	Monitoring Well Borings (potential Extraction Well) 199-H4-90 (C8787) and 199-H4-91 (C8788)	100 ft bgs, or the base of the first water bearing RUM Unit plus 5 ft, whichever is deepest	Grab sample every 5 ft Archival samples at lithologic changes	One each at the top and bottom of the unconfined aquifer and one from within the RUM semi-confined or confined aquifer	One in RUM	One each at the top and bottom of the unconfined aquifer Every 5 ft within the first water bearing unit of the RUM Analyte: Hexavalent Chromium (Field Measurement)	One sample after well development is complete Analytes: Bicarbonate, Carbonate, Calcium, Hexavalent Chromium, Total Chromium, Magnesium, Nitrate, Potassium, Strontium-90, Sulfate, and Tritium
				Chemical			
				One in the lower Ringold mud Analytes: Hexavalent chromium			
				Split Spoon Estimated Depths (ft bgs): **199-H4-90:** 45.0-47.5; 48.0-50.5; 60.0-62.5; 80.0-82.5 **199-H4-91:** 35.0-37.5; 47.5-50.0; 65.0-67.5; 80.0-82.5			

Number of split spoon samples	8
Approximate number of field quality-control split spoon samples (one per well)	2
Approximate number of groundwater samples	14
Approximate number of groundwater field quality-control samples (one per well)	2

RUM = Ringold Formation Upper Mud

3.4 Well Construction

Well construction shall meet the minimum standards required by WAC 173-160, Part II for construction of resource protection wells, unless a state approved variance is utilized. Table 3 provides a summary of estimated well construction parameters including estimated water levels, well depths, screen intervals, filter-pack intervals, bentonite-seal intervals, and cement-seal intervals. The generalized well design for 100-D wells is illustrated in Figure 2 and Figure 3 for 100-H RUM wells.

3.4.1 Screen Riser and Sump

Wells will be constructed with 6-inch diameter Type 304/304L or 316/316L Schedule 10 stainless steel permanent casing. Well depths will be determined based on the depth of the RUM. All wells shall be constructed using a sump, screen, and riser/couplings composed of Schedule 10, Type 304/304L or 316/316L stainless steel with flush-joint design and O-rings, and will extend to the surface. The well will be constructed using a 5-foot long sump (100-D) and 3-foot long sump (100-H) and end cap, and V-Slot continuous wire-wrap well screen. In unconfined aquifer wells the top of the screen should nominally be 3 to 5 feet above the maximum high water table mark; i.e., ~10 ft above existing water table during summer months.

A well design using 50-slot screens and an 8-16 mesh filter pack are anticipated at the 100-D extraction wells. To cover the range of possible screen and filter pack selection, the Contractor will also obtain 40-slot screen and 10-20 mesh pack material (more conservative design), or 70-slot screen and 6-12 mesh pack (more aggressive well design). CHPRC will cover the costs for screens and associated filter pack if they are not used.

For the 100-H monitoring wells it is anticipated that a 10-slot screen with a 20-40 mesh filter pack will be needed. Depending on formation material encountered a 20-slot screen and 10-20 mesh pack might be required. Both sets of materials will be purchases ahead of time. CHPRC will cover the costs for screen and filter pack material not used.

Screen slot size will be determined by CHPRC's Science Lead based on sieve analyses. Anticipated screen lengths are 10 to 35 ft, but will be determined by CHPRC's science lead. Final screen placement will be at the direction of the BTR and/or CHPRC's Field Geologist/ Hydrogeologist. The Contractor will obtain CHPRC approval before purchasing anticipated well screens and filter pack materials for either 100-D or 100-H wells, because some material is available in the CHPRC lay-down yard.

An environmentally-compatible non-petroleum lubricant, such as Jet-Lube Well-Guard® thread compound [1] or equivalent, may be used for lubricating the threads of the stainless steel and casing during installation activities.

Stainless steel centering guides (centralizers) shall be placed both above and below the well screen. If well screen lengths exceed 20 feet, stainless steel centering guides shall be placed at 20-foot intervals throughout the length of the screen. Stainless steel centering guides shall also be placed at 40-foot intervals above the top of the screen. Centering guides will not be required if the contractor specifies a drilling method that provides an equivalent centering effect for the permanent casing (such as Dual Wall Percussion).

3.4.2 Annular Seal & Filter Pack

The filter pack will consist of Colorado (Carmeuse) silica sand and will extend from below the well sump to 5 ft above the top of the screen. Screen size will correspond to the chosen mesh size (i.e. filter pack

[1] Jet-Lube Well-Guard® is a registered trademark of Jet-Lube, Inc. of Houston, TX.

mesh size is chosen based on formation sieve analysis results; screen slot size is based on the mesh size where up to 10% of the filter pack is capable of passing into the screen). The Contractor shall place and develop the filter pack in no greater than 10 ft intervals using a dual surge block method. As a general guide, if the filter pack in the annulus drops out at a rate of less than 0.1 ft in 15 minutes, the interval is considered sufficiently settled. Each interval shall be surged until CHPRC's Field Geologist deems the development satisfactory.

A minimum 1.5-ft layer (100-D) or 3-ft layer (100-H) of bentonite pellets will be placed directly on top of the filter pack. Granular bentonite (i.e.: crumbles, chunks, chips, etc.) or cement grout and additional bentonite pellets will be used to seal the remaining borehole to 10 ft bgs. A surface seal of Type I/II Portland cement grout, that shall contain no more than 5% bentonite gel powder by dry weight, shall be installed from 10 ft bgs to ground surface per WAC 173-160, Part II.

3.4.3 Wellhead

Surface protection for each well will be installed in accordance with WAC 173-160-420 and GRP-EE-02-14.1, and the design specified in the Contract Release. As shown in Figures 2 and 3, a minimum 8-in diameter stainless steel protective casing will be placed from 3 ft above ground surface (ags) to 2 ft bgs with a lockable cap extending 15 inches above the protective casing.

A 4- by 4- by 0.5 ft concrete pad will be placed around the well monument. This pad will be labeled on the north side by a 3-in domed brass survey marker stamped with the well identification number and well name. The pad will be reinforced with 6 in by 6 in W1.4 by W1.4 (metric wire gage, approximately equivalent to 16 gage) welded wired fabric. Four protective posts (3-inch diameter) will surround the pad, extending to 3 ft ags and be cemented at least 2 feet into the ground. The fourth post will be removable for well access. Posts will be painted yellow as specified in the Contract Release.

An access port will be provided on the protective casing and shall be configured as shown in Figure 4.

The permanent sampling or extraction pump will be installed by CHPRC personnel after the wells are accepted by the CHPRC from the Contractor.

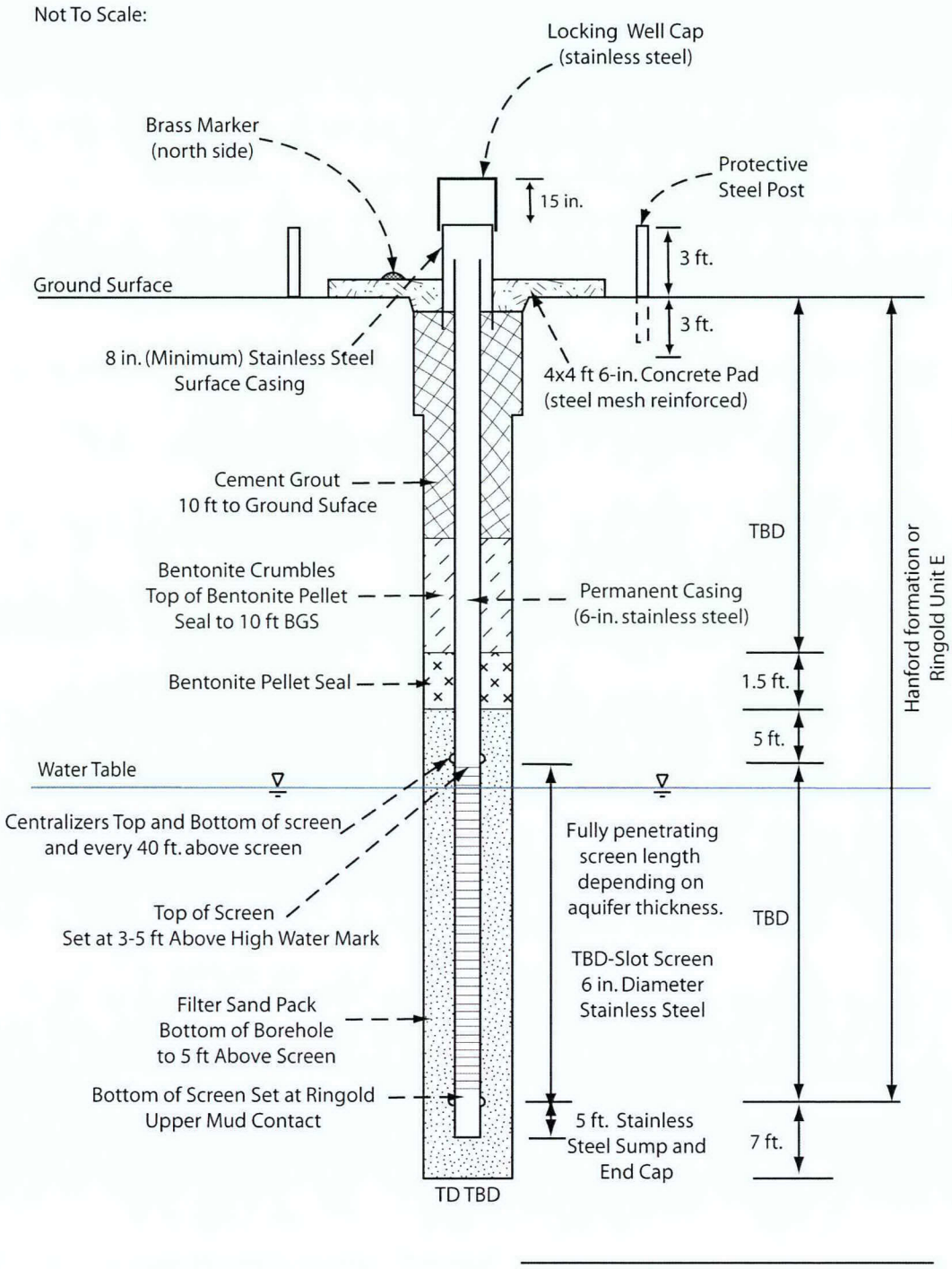

bgs = below ground surface
TBD = to be determined
TD = total depth

CHPUBS_100DH_0174b

Figure 2 - Generalized Well Construction for the 100-D Wells

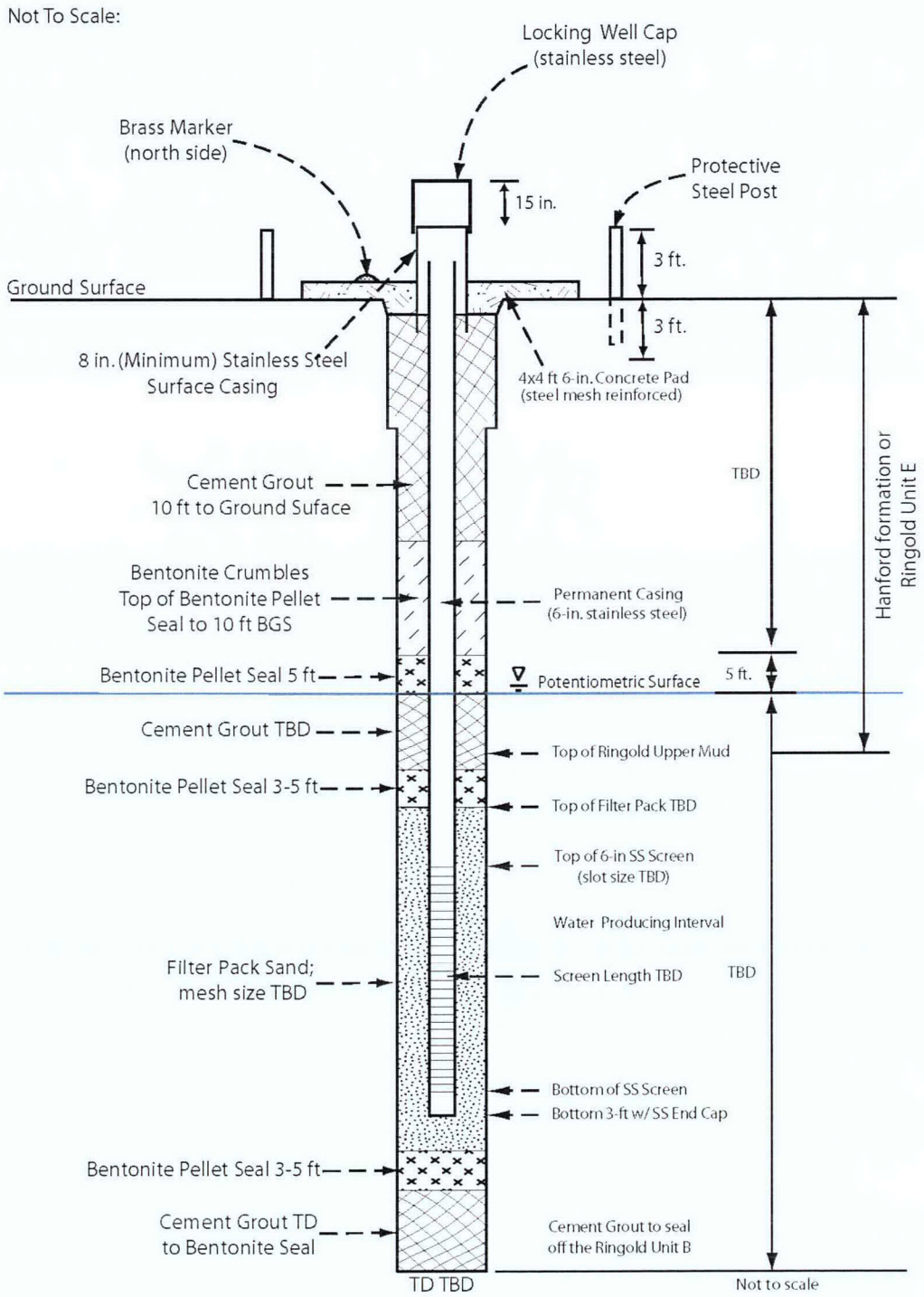

bgs = below ground surface
TBD = to be determined
TD = total depth

CHSGW20130351

Figure 3 - Generalized Well Construction for the 100-H RUM Wells

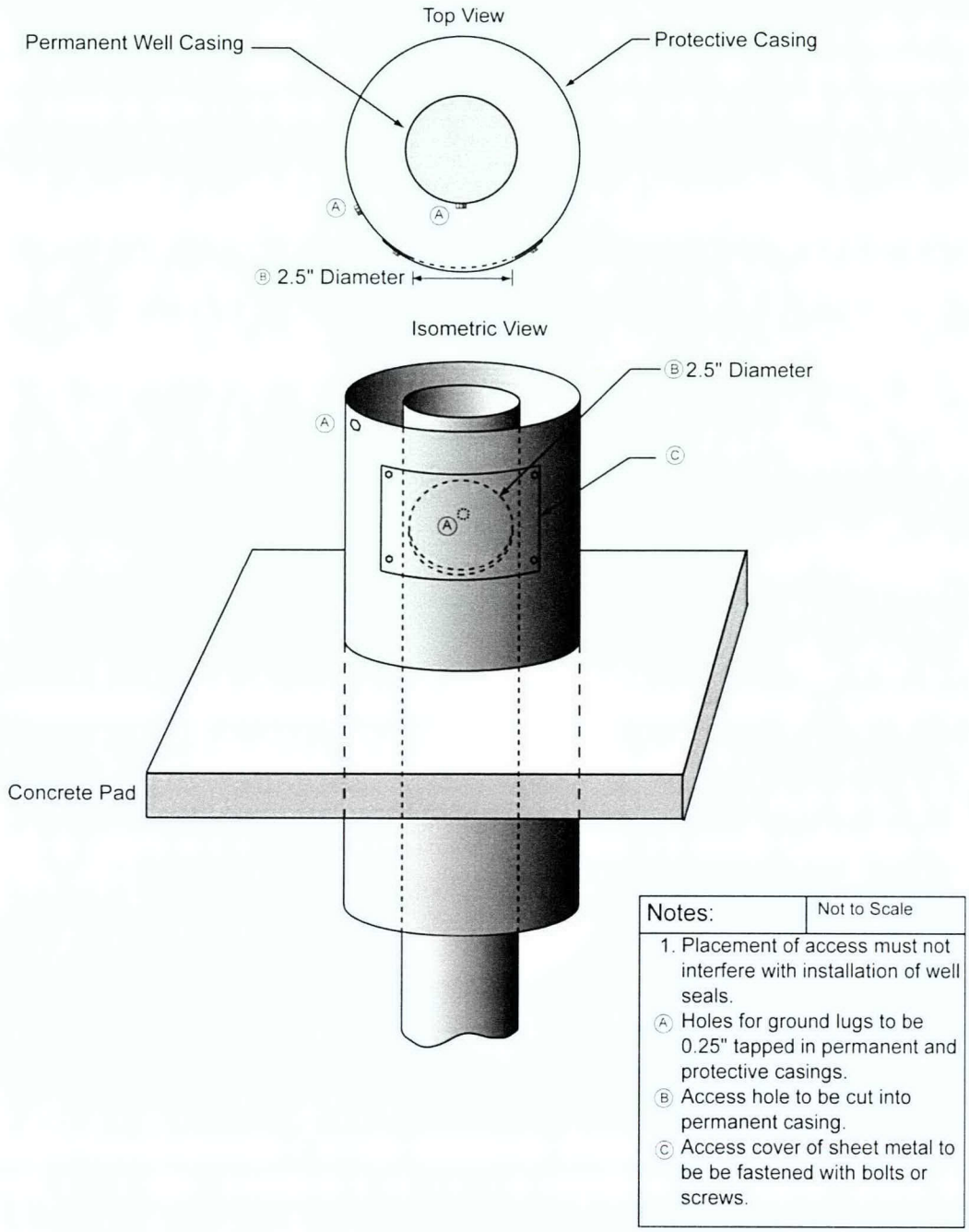

Figure 4 - Diagram Showing Configuration of Access Port in Protective Casing

3.5 Well Development

The objectives of well development are to settle the filter pack, remove formation fines, prevent uncontrolled infiltration of fines, and ensure efficient hydraulic communication of the well with the surrounding aquifer. Well development will be conducted in two stages with initial development performed during well completion and final development performed after the wells have been constructed.

3.5.1 Initial Well Development

Initial development will be performed during well completion in conjunction with placement of the filter pack. Surging using a dual-flange surge block both settles the filter pack and begins to pull drilling-generated fines from the borehole wall to improve hydraulic communication with the aquifer. Combining surging with the sand pack placement will provide an abrasive action on the borehole wall that will enhance borehole efficiency.

Surging should be carried out in no greater than 10-ft intervals. Fines will be removed from the well as necessary using a sand pump or other apparatus. A dart bailer is not recommended for this process because the use of this tool runs an increased risk of puncturing the bottom of the well. Well surging will continue until there is less than 3 cm (0.1 ft) of screen infill per 15 minutes of surge time. Surging will continue until the well ceases to exceed this rate of settling and turbidity has decreased to ≤5 nephelometric turbidity units, and temperature, pH, and specific conductance measurements have stabilized (i.e., at least three consecutive measurements within 10 percent of each other).

3.5.2 Final Well Development

Final well development and pump installation shall not be started sooner than 12 hours following placement of the annular cement grout seal, but shall take place within two weeks of installation of the well screen/casing for each well. The contractor shall notify the buyer's technical representative (BTR) 24 hours prior to the anticipated final development time in order to arrange for purgewater transportation, hydrogeologic support, and other support necessary to implement final development. The contractor shall provide a submersible pump with a check valve, flow meter, and all necessary support equipment capable of pumping no less than 100 gallons per minute (gpm). The average well development time is assumed to take approximately 12 hours. Final well development shall be performed as follows:

- Bail fines from the well to within 0.5 ft of the bottom of the sump in preparation for final development.
- Develop the well at a minimum of 20-foot intervals throughout the length of the screen using a submersible pump capable of producing, at a minimum, 100 gallons per minute (gpm) at the well head.
- The Geologist will also periodically collect water measurements of physical parameters, such as turbidity, temperature, pH, and conductivity using field instruments. The Contractor needs to place a small valve on the restricting manifold with the flow meter to facilitate sampling.
- Development will continue until the well water is <5 nephelometric turbidity units (NTUs) and the temperature, pH, and conductivity have stabilized (at least three consecutive measurements with less than 10% mean variance).
- The Field Geologist will determine when development is complete in accordance with GRP-EE-01-6.3, *Well Development and Testing*. Should these conditions not be met, CHPRC's BTR, with

the concurrence of CHPRC's representative Field Geologist, and the project Technical Lead, shall determine when the development is adequate.

CHPRC's Field Geologist will monitor aquifer response and recovery time utilizing a data logger in conjunction with a pressure transducer (or similar device) or manually using an e-tape. During recovery monitoring, the pump and all down-hole monitoring equipment must remain in place. Recovery monitoring is expected to take at least 60 minutes per final development stage.

3.6 Final Report

A borehole summary report will be prepared after well completion to compile and archive records, observations, and measurements associated with the drilling and well construction. The borehole summary report includes the field notes and forms prepared during the drilling, sampling, and construction of each well, well construction details, and well development data. Additional information presented includes the geologic log, the results of the civil survey with elevation and depth corrections to measurements made while drilling, a summary of the management and disposition of drilling-derived waste, and the well acceptance documentation.

4. Waste Management

Waste generated during the activities described in this document will be managed according to the *Interim Action Waste Management Plan for the 100-HR-3 and 100-KR-4 Operable Units* (DOE/RL-97-01). Vadose- and saturated-zone miscellaneous waste will be placed in containers and disposed based on field-screening results. All waste will be packaged in accordance with SGRP-PRO-OP-50120, *Waste Packaging and Handling at S&GRP.*

4.1 Vadose Zone Waste

Vadose zone cuttings will be placed on plastic sheeting near the well head and periodically surveyed for radiological contamination. If surveys detect contamination, the soil will be sampled and analyzed prior to disposition; otherwise, the soil will be released to the environment and spread at the well head in accordance with SGRP-PRO-OP-50120.

Vadose zone miscellaneous solid waste (MSW) will be placed in containers and disposed of based on field-screening results. All waste will be packaged in accordance with SGRP-PRO-OP-50120, *Waste Packaging and Handling at S&GRP.*

4.2 Groundwater-Contacted Waste

Groundwater-contacted waste, defined as any cuttings below the historic high water mark for each well, will be containerized in Roll On/Roll Off (RO/RO) boxes and periodically surveyed in order to verify that the cuttings are not contaminated at levels greater than the instrument(s) sensitivity. Purgewater from containerized cuttings will be decanted and stored at the wellhead until transported to the Modular Storage Units (MSUs) by CHPRC. The saturated soils will be sampled and analyzed prior to disposition; however, at no time will saturated soils be eligible for release to the environment, regardless of survey results.

Groundwater-contacted MSW will be placed in containers and disposed of based on field-screening results. All waste will be packaged in accordance with SGRP-PRO-OP-50120, *Waste Packaging and Handling at S&GRP.*

4.3 Purgewater

Purgewater will be designated based on process knowledge and collected and contained at the well head until it is either transported to the MSUs. Purgewater, groundwater samples, and decontamination fluids generated during well drilling, sample screening, and analysis will be managed as Purgewater in accordance with the guidance provided in DOE/RL-2011-41, 2011, *Hanford Site Strategy for Management of Investigation Derived Waste.*

5. Quality Assurance

CHPRC-issued document *Quality Assurance Program* (PRC-MP-QA-599), describes how CHPRC implements the quality assurance (QA) requirements conveyed in U.S. Department of Energy Order 414.1D (*Quality Assurance*) and "Nuclear Safety Management" (10 *Code of Federal Regulations* [CFR] 830.121). PRC-MP-QA-599 also shows how the *Hanford Federal Facility Agreement and Consent Order* (Ecology et al. 1989) and *Hanford Analytical Services Quality Assurance Requirements Document (HASQARD)* (DOE/RL-96-68) apply to Environmental QA Program Plans. CHPRC has also issued *Environmental Quality Assurance Plan* (CHPRC-00189). All CHPRC employees and subcontractors performing environmental cleanup activities are responsible for performing work in accordance with the requirements set forth in CHPRC-00189.

All work performed under this DOW will be performed in compliance with Project Hanford Management System overall QA program design (PRC-MP-QA-599). A project specific QA Program plan for the Soil & Groundwater Remediation Project scope is presented in Appendix C of CHPRC-00189.

All operations including drilling, sampling and well completion/decommissioning, testing and associated documentation are subject to surveillance by CHPRC, CHPRC's authorizing agent and/or owner. This surveillance shall in no way relieve the contractor of any contractual responsibilities. Note the term "surveillance" as used here may include inspection, survey, and/or assessment.

Commercially available tape measures and electronic depth sounders shall have an accuracy of +/- 0.05 ft in 300 ft as required by CHPRC procedure GRP-EE-01-7.4, *Requirements for Use of Hydrogeologic Field Measurement and Monitoring Equipment,* and will be used to make depth and length measurements to +/- 0.01 ft tolerance while drilling and completing the well. The surface of the ground adjacent to the borehole will be used as the "ground surface" reference for depth measurements. The elevation of the brass marker on the concrete well pad and the top of the protective casing will be surveyed after the well has been completed. A correlation of the measurements made while drilling to the surveyed elevation will be included in the final report.

Technical procedures to be followed are listed in Section 7.2 of this document.

6. Schedule

Drilling, sampling, well construction, operations, and decommissioning are scheduled to begin by August 2013 and be completed by September 30, 2013.

7. General Requirements

Field work for the wells will be conducted in accordance with existing CHPRC procedures and protocols and the specifications set forth in this DOW. The applicable procedures are discussed in the following sections.

7.1 Safety & Health

All personnel working at the drilling sites addressed by this plan will have completed, at a minimum:

- Occupational Safety and Health Administration Act 40-hour Hazardous Waste Site Worker training program (29 CFR 1910.120).
- CHPRC General Employee Training (CGET).
- Hanford Radiation Worker II training.

Work will be performed in accordance with the following procedures:

- CHPRC-00073, *CH2M Hill Plateau Remediation Company Radiological Control Manual*
- Site specific plans, as applicable:
  - Health and safety plans
  - Radiological evaluation/radiation work permits
  - Activity hazard analysis/job safety analysis
  - Site-specific Waste Packaging Instruction
- CHPRC procedures
- Soil and Groundwater Remediation Project Radiological Control Procedures
- CHPRC Environmental Procedures

7.2 Technical Procedures/Specifications

This section identifies technical procedures/specifications applicable to field activities performed under this DOW. Activities associated with the drilling and installation of these wells and management of waste generated by these activities will adhere to, at a minimum, the following procedures and requirements:

- GRP-EE-01-1.11, *Purgewater Management*
- GRP-EE-01-2.7, *Sample Management and Reporting Sample Issue Resolution*
- GRP-EE-01-3.1, *Environmental Sample Preparation and Shipping Authorization*
- GRP-EE-01-6.2, *Field Cleaning and/or Decontamination of GeoProbe® and Drilling Equipment*
- GRP-EE-01-6.3, *Well Development and Testing*
- GRP-EE-01-7.0, *Geologic Logging*
- GRP-EE-01-7.4, *Requirements for Use of Hydrogeologic Field Measurement & Monitoring Equipment*
- GRP-EE-02-14.1, *Drilling, Remediating, and Decommissioning Resource Protection Wells, and Geotechnical Soil Borings*

- GRP-EE-05-1.21, *Particle Size Distribution of Soil - Wet Sieve Analysis*
- GRP-FS-04-G-004, *Operational Monitoring Groundwater Sampling*
- GRP-FS-04-G-028, *Field Characterization and Treatment Monitoring Activities Groundwater Sampling*
- GRP-FS-04-G-029, *Non-VOC Soil and Sediment Sampling*
- GRP-FS-04-G-030, *VOC Soil and Sediment Sampling*
- PRC-PRO-IRM-8310, *Document Control Processes*
- PRC-PRO-IRM-10863, *Control of Notebooks and Logbooks*
- PRC-PRO-EP-15333, *Environmental Protection Processes*
- PRC-PRO-EP-15334, *Effluent and Environmental Monitoring for Radionuclide Airborne Emissions*
- PRC-PRO-EP-15335, *Environmental Permitting and Document Preparation*
- PRC-RD-EP-15332, *Environmental Protection Requirements*
- SGRP-PRO-OP-50120, *Waste Packaging and Handling at S&GRP*
- WAC 173-160, *Minimum Standards for Construction and Maintenance of Wells*

8. Project Documentation

Documentation requirements for these activities are separated into scoping documents, field activity documents, and reporting documents. The following documents will be prepared to support the well drilling activity:

Scoping Documents

- DOW (this document)
  - Drilling specifications/subcontractor scope of work (procurement package)
  - Excavation permit
  - SGRP-PRO-OP-50120
  - Additional waste management documents, as required
- Field Documentation
  - Well Drilling/Decommissioning Planning form
  - Daily Field Activity Reports
  - Sample collection, custody, and shipment documentation for waste samples
  - Well logs (borehole, lithologic, and completion)
  - Field Logbook
  - Well Construction summary report
  - Well Summary sheet
  - Field Cleaning and/or Decontamination sheets
  - Well Development and Test data sheets
  - Sieve Analysis sheets
  - Well Survey Data Report
  - Well Acceptance Report
- The WDOH ALARACT Agreements(s)
- Reporting Documents
  - Field documentation will be transmitted to Drilling Operations for incorporation into the well database
  - Borehole Summary Report
  - State of Washington Resource Protection Well Report (generated by driller)

The records produced for this project will undergo technical and management review in accordance with CHPRC practices and procedures. The required reviewers will be identified prior to document completion, and the review time will be established as soon as practical.

9. References

CH2M Hill Plateau Remediation Company Soil and Groundwater Remediation Project Procedures:

GRP-EE-01-1.11, *Purgewater Management*

GRP-EE-01-2.7, *Sample Management and Reporting Sample Issue Resolution*

GRP-EE-01-3.1, *Environmental Sample Preparation and Shipping Authorization*

GRP-EE-01-6.2, *Field Cleaning and/or Decontamination of GeoProbe® and Drilling Equipment*

GRP-EE-01-6.3, *Well Development and Testing*

GRP-EE-01-7.0, *Geologic Logging*

GRP-EE-01-7.4, *Requirements for Use of Hydrogeologic Field Measurement & Monitoring Equipment*

GRP-EE-02-14.1, *Drilling, Remediating, and Decommissioning Resource Protection Wells, and Geotechnical Soil Borings*

GRP-EE-05-1.21, *Particle Size Distribution of Soil - Wet Sieve Analysis*

GRP-FS-04-G-004, *Operational Monitoring Groundwater Sampling*

GRP-FS-04-G-028, *Field Characterization and Treatment Monitoring Activities Groundwater Sampling*

GRP-FS-04-G-029, *Non-VOC Soil and Sediment Sampling*

GRP-FS-04-G-030, *VOC Soil and Sediment Sampling*

PRC-PRO-EP-15333, *Environmental Protection Processes*

PRC-PRO-EP-15334, *Effluent and Environmental Monitoring for Radionuclide Airborne Emissions*

PRC-PRO-EP-15335, *Environmental Permitting and Document Preparation*

PRC-PRO-IRM-8310, *Document Control Processes*

PRC-MP-QA-599, *Quality Assurance Program*

PRC-RD-EP-15332, *Environmental Protection Requirements*

SGRP-PRO-OP-50120, *Waste Packaging and Handling at S&GRP*

Other References:

10 CFR 830.121, *Nuclear Safety Management,* Code of Federal Regulations, as amended.

29 CFR 1910.120, *Hazardous Waste Operations and Emergency Response*, Code of Federal Regulations, as amended.

40 CFR 300, *National Oil and Hazardous Substances Pollution Contingency Plan*, Code of Federal Regulations, as amended.

BNWL-CC-1352, 1967, *Ground Disposal of Reactor Coolant Effluent,* Battelle-Northwest, Richland, Washington

CHPRC-00073, 2013, *CH2M Hill Plateau Remediation Company Radiological Control Manual,* CH2M Hill Plateau Remediation Company, Richland, Washington.

CHPRC-00189, 2013, *CH2M Hill Plateau Remediation Company Environmental Quality Assurance Program Plan*, CH2M Hill Plateau Remediation Company, Richland, Washington.

Comprehensive Environmental Response, Compensation, and Liability Act of 1980, (CERCLA) 42 U.S.C. 9601, et seq.

DOE O 414.1D, *Quality Assurance*, U.S. Department of Energy, Washington, D.C. Available at: https://www.directives.doe.gov/directives/414.1-BOrder-d/view

DOE-RL, 2007, *Hanford Site Radioactive Air Emissions License #FF-01, Enclosure 3, ALARACT Agreements, ALARACT 18, Environmental Restoration Program ALARACT Demonstration for Drilling*, U.S. Department of Energy, Richland Operations Office, Richland, Washington.

DOE/RL-93-43, 1993, *Limited Field Investigation Report for the 100-HR-3 Operable Unit,* REV. 0, U.S. Department of Energy, Richland Operations Office, Richland, Washington

DOE/RL-96-68, 2007, *Hanford Analytical Services Quality Assurance Requirements Document (HASQARD)*, Rev. 3, U.S. Department of Energy, Richland Operations Office, Richland, Washington

DOE/RL-96-84, 2003, *Remedial Design Report and Remedial Action Wok Plan for the 100-HR-3 and 100-KR-4 Groundwater Operable Units' Interim Action,* U.S. Department of Energy, Richland Operations Office, Richland, Washington.

DOE/RL-97-01, 2005, *Interim Action Waste Management Plan for the 100-HR-3 and 100-KR-4 Operable Units*, Rev. 5, U.S. Department of Energy, Richland Operations Office, Richland, Washington.

DOE/RL-2008-42, 2009, *Hydrogeological Summary Report for the 600 Area Between 100-D and 100-H for the 100-HR-3 Groundwater Operable Unit,* U.S. Department of Energy, Richland Operations Office, Richland, Washington

DOE/RL-2008-46, 2010, *Integrated 100 Area Remedial Investigation/Feasibility Study Work Plan,* Rev. 0, U.S. Department of Energy, Richland Operations Office, Richland, Washington.

DOE/RL-2008-46-ADD1, 2010, *Integrated 100 Area Remedial Investigation/Feasibility Study Work Plan, Addendum 1: 100-DR-1, 100-DR-2, 100-HR-1, 100-HR-2, and 100-HR-3 Operable Units*, Rev. 0, U.S. Department of Energy, Richland Operations Office, Richland, Washington.

DOE/RL-2010-95, *Remedial Investigation/Feasibility Study for 100-DR-1, 100-DR-2, 100-HR-1, 100-HR-2, and 100-HR-3 Operable Units*, U.S. Department of Energy, Richland Operations Office, Richland, Washington.

DOE/RL-2011-41, 2011, *Hanford Site Strategy for Management of Investigation Derived Waste*, U.S. Department of Energy, Richland Operations Office, Richland, Washington.

DOE/RL-2011-118, *Hanford Site Groundwater Monitoring Report for 2011*, U.S. Department of Energy, Richland Operations Office, Richland, Washington.

DOE/RL-2013-35, *100-HR-3 Groundwater Operable Unit Well Installation Sampling and Analysis Plan,* Rev 0, U.S. Department of Energy, Richland Operations Office, Richland, Washington.

DOE/RL-2013-35 ADD1, *100-HR-3 Groundwater Operable Unit Well Installation Sampling and Analysis Plan,* Rev 0, U.S. Department of Energy, Richland Operations Office, Richland, Washington.

Ecology, EPA, and DOE, 1989, *Hanford Federal Facility Agreement and Consent Order*, 2 vols., as amended, Washington State Department of Ecology, U.S. Environmental Protection Agency, and U.S. Department of Energy, Olympia, Washington. Available at: http://www.hanford.gov/?page=91&parent=0.

ROD/R10-96/134, 1996, *Declaration of the Record of Decision for the 100-HR-3 and 100-KR-4 Operable Units,* U.S. Department of Energy, Richland Operations Office, Richland, Washington. Available at: http://www5.hanford.gov/arpir/?content=findpage&AKey=D196097243

SGW-41534, 2009, *Description of Work for the Installation of 35 Remedial Process Optimization Wells in the 100-H Area for the 100-HR-3 Operable Unit, Fiscal Year 2009*, Rev. 0, CH2M Hill Plateau Remediation Company, Richland, Washington..

SGW-41535, 2009, ARRA *Description of Work for the Installation of Fourteen Remedial Process Optimization Wells for the 100-D Area in the 100-HR-3 Operable Unit, Fiscal Year 2009*, Rev. 0, CH2M Hill Plateau Remediation Company, Richland, Washington.

SGW-45632, 2010, *Description of work for the Installation of 15 Groundwater Wells in the 100-HR-3 Operable Unit to Support RI/FS in FY 2010-2011*, Rev. 1, CH2M Hill Plateau Remediation Company, Richland, Washington.

SGW-53577, 2013, *Description of Work for the Installation of 6 Wells at 100-D/H and the Decommissioning of 199-H4-3, FY 2013*, Rev. 2, CH2M Hill Plateau Remediation Company, Richland, Washington.

SGW-54542, 2013, *Recommendations and Technical Justification for New and Replacement Wells and Re-alignment of Existing Wells Associated with Interim Remedial Actions at 100-D/H Area*, Rev. 0, CH2M Hill Plateau Remediation Company, Richland, Washington.

WAC 173-160, *Minimum Standards for Construction and Maintenance of Wells*, Washington Administrative Code, as amended.

WAC 173-160-420, *General Construction Requirements for Resource Protection Wells*, Washington Administrative Code, as amended.

WDOH, 2008, *The Department of Energy Hanford Site Radioactive Air Emissions License #FF-01*, Enclosure 3, "ALARACT Agreements," ALARACT 18, "Environmental Restoration Program ALARACT Demonstration for Drilling," Washington State Department of Health, Office of Radiation Protection, Radioactive Air Emissions Section, Richland, Washington. Available at: http://www.doh.wa.gov/Portals/1/Documents/4100/FF-01_a_.pdf

WHC-SD-EN-TI-011, 1992, *Geology of the Northern Part of the Hanford Site: An outline of Data Sources and the Geologic Setting of the 100 Areas*, Rev. 0, Westinghouse Hanford Company, Richland, Washington.

WHC-SD-EN-TI-132, 1993, *Geologic Setting of the 100-HR-3 Area, Hanford Site, South Central Washington*, Rev. 0, Westinghouse Hanford Company, Richland, Washington.

WHC-SD-EN-TI-181, 1993, *100-D Area Technical Baseline Report,* Rev. 0, Westinghouse Hanford Company, Richland, Washington.

WMP-29720, 2006, *Description of Work for the Installation of Two NABIR Wells at the 100-H Area, FY2006*, Rev. 0, Fluor Hanford, Inc., Richland, Washington.

10. Distribution

Onsite

	U.S. Department of Energy Richland Operations Office	
	DOE Public Reading Room	H2-53
	N.M. Bland (2)	A5-11
Electronic Copies Only	CHPRC	
	L.D. Bultena	R3-60
	D.P. Capelle	R3-60
	J.B. Geiger	R3-60
	S.L. Huggins	R3-21
	K.A. Ivarson	R3-50
	J.L. Kaas	R3-21
	R.W. Oldham	R3-60
	R. Ramirez	R3-20
	L.C. Swanson	R3-60
4	Lockheed Martin Services, Inc.	
	Central Files	B1-07
	Document Processing Center (1)	H6-08
	EDMC (2)	H6-08
1	Pacific Northwest National Laboratory	
	Hanford Technical Library	P8-55
Electronic Copies Only	B.N. Bjornstad	K6-81
	J.A. Horner	K6-96
	D.C. Lanigan	K6-75
	G.V. Last	K6-81
	R. Mackley	K6-96