DOCUMENT NAME: ARCL for 115-F and 117-F 2137
AUTHOR Kennedy DOC NO. PNL-4704
DATE 07/01/83
KMB
START

H0015475
PNL-4704
I-2499
--70A

A Research Report for
UNC Nuclear Industries

ALLOWABLE RESIDUAL CONTAMINATION LEVELS FOR DECOMMISSIONING THE 115-F AND 117-F FACILITIES AT THE HANFORD SITE

W. E. Kennedy, Jr.
B. A. Napier

July 1983

Prepared for the
U.S. Department of Energy
under Contract DE-AC06-76RLO 1830

Pacific Northwest Laboratory
Richland, Washington 99352

AUG 1991
RECEIVED
EDMC

ABSTRACT

This report contains the results of a study sponsored by UNC Nuclear Industries to determine Allowable Residual Contamination Levels (ARCL) for the 115-F and 117-F facilities at the Hanford Site. The purpose of this study is to provide data useful to UNC engineers in conducting safety and cost comparisons for decommissioning alternatives. The ARCL results are based on a scenario/exposure-pathway analysis and compliance with an annual dose limit for three specific modes of future use of the land and facilities. These modes of use are restricted, controlled, and unrestricted. Information on restricted and controlled use is provided to permit a full consideration of decommissioning alternatives. Procedures are presented for modifying the ARCL values to accommodate changes in the radionuclide mixture or concentrations and to determine instrument responses for various mixtures of radionuclides. Finally, a comparison is made between existing decommissioning guidance and the ARCL values calculated for unrestricted release of the 115-F and 117-F facilities. The comparison shows a good agreement.

TABLE OF CONTENTS

ABSTRACT iii

ACKNOWLEDGMENTS ix

1.0 INTRODUCTION 1

1.1 THE 115-F AND 117-F FACILITIES 2

1.2 EXISTING DECOMMISSIONING STANDARDS 3

1.3 HISTORY OF THE ALLOWABLE RESIDUAL CONTAMINATION LEVEL METHOD 4

2.0 THE ALLOWABLE RESIDUAL CONTAMINATION LEVEL METHOD . . . 7

2.1 SUMMARY OF THE METHOD 8

2.2 ALLOWABLE RESIDUAL CONTAMINATION LEVELS 10

2.2.1 Maximum Annual Dose 11

2.2.2 Radiation Exposure Pathways and Exposure Scenarios. 12

2.3 ASSUMED USE MODES 14

2.3.1 Restricted Use 14

2.3.2 Controlled Use 14

2.3.3 Unrestricted Use 15

3.0 FACILITY DESCRIPTIONS 17

3.1 PHYSICAL DESCRIPTIONS OF THE 115-F AND 117-F FACILITIES . 17

3.2 RADIOLOGICAL CHARACTERISTICS OF THE 115-F AND 117-F FACILITIES 19

4.0 RADIATION EXPOSURE SCENARIO ANALYSIS 25

4.1 RESTRICTED-USE MODE 25

4.2 CONTROLLED-USE MODE 29

4.3 UNRESTRICTED-USE MODE 30

4.3.1 Resource Salvage Exposure Scenario 30

4.3.2 Resource Recycle Exposure Scenario 31

4.3.3 Residential/Home-Garden Exposure Scenario 32

5.0 ALLOWABLE RESIDUAL CONTAMINATION LEVEL CALCULATIONS 35

5.1 DOSE MODELS FOR RADIATION EXPOSURE PATHWAYS 35

5.2 ALLOWABLE RESIDUAL CONTAMINATION LEVEL MAXIMUM ORGAN DOSE CONVERSION FACTORS 36

5.3 ALLOWABLE RESIDUAL CONTAMINATION LEVEL APPLICATIONS TO THE 115-F AND 117-F FACILITIES 38

6.0 DISCUSSION OF RESULTS 43

6.1 SURFACE CONTAMINATION ASSUMPTIONS. 43

6.2 MODELING ASSUMPTIONS 44

6.3 COMPARISON WITH REGULATORY GUIDE 1.86. 45

6.4 CONCLUSIONS 46

7.0 REFERENCES. 49

APPENDIX A - SCENARIO-SPECIFIC DOSES FOR THE 115-F AND 117-F FACILITIES . . . A.1

APPENDIX B - ALLOWABLE RESIDUAL CONTAMINATION LEVEL WORKSHEETS FOR THE 115-F AND 117-F FACILITIES B.1

LIST OF FIGURES

1.1.1 The 100-F Reactor Area at the Hanford Site 3

2.1.1 Allowable Residual Contamination Level Method Logic Diagram . 9

3.1.1 Cover Gas Flow Diagram for the 100-F Reactor 18

4.1.1 Exposure Scenarios for the Decommissioning 115-F and 117-F Facilities 26

4.1.2 Dose Rate as a Function of Room Volume for a ^{60}Co Deposition of 1 Ci/m 27

B.1 Allowable Residual Contamination Level Worksheet for the 115-F and 117-F Facilities at the Hanford Site . . . B.2

B.2 Allowable Residual Contamination Level Worksheet for the 115-F and 117-F Facilities at the Hanford Site - Example Problem 1 . . . . . B.5

B.3 Allowable Residual Contamination Level Worksheet for the 115-F and 117-F Facilities at the Hanford Site - Example Problem 2 . . . . . B.7

B.4 Allowable Residual Contamination Level Radioactive Decay Correction Worksheet B.8

B.5 Allowable Residual Contamination Level Radioactive Decay Correction Worksheet - Example Problem 3 . . . . . B.11

B.6 Allowable Residual Contamination Level Worksheet for the 115-F and 117-F Facilities at the Hanford Site - Example Problem 3 . . . . . B.12

B.7 Instrument Response Worksheet B.13

B.8 Calibration Curve for the Eberline MS-2 Miniscaler and Beta-type Scintillation Probe B.15

B.9 Instrument Response Worksheet - Example Problem 4 . . . B.16

LIST OF FIGURES

1.1.1 The 100-F Reactor Area at the Hanford Site 3

2.1.1 Allowable Residual Contamination Level Method Logic Diagram . 9

3.1.1 Cover Gas Flow Diagram for the 100-F Reactor 18

4.1.1 Exposure Scenarios for the Decommissioning 115-F and 117-F Facilities 26

4.1.2 Dose Rate as a Function of Room Volume for a ^{60}Co Deposition of 1 Ci/m 27

B.1 Allowable Residual Contamination Level Worksheet for the 115-F and 117-F Facilities at the Hanford Site . . . B.2

B.2 Allowable Residual Contamination Level Worksheet for the 115-F and 117-F Facilities at the Hanford Site - Example Problem 1 . . . . . B.5

B.3 Allowable Residual Contamination Level Worksheet for the 115-F and 117-F Facilities at the Hanford Site - Example Problem 2 . . . . . B.7

B.4 Allowable Residual Contamination Level Radioactive Decay Correction Worksheet B.8

B.5 Allowable Residual Contamination Level Radioactive Decay Correction Worksheet - Example Problem 3 . . . . . B.11

B.6 Allowable Residual Contamination Level Worksheet for the 115-F and 117-F Facilities at the Hanford Site - Example Problem 3 . . . . . B.12

B.7 Instrument Response Worksheet B.13

B.8 Calibration Curve for the Eberline MS-2 Miniscaler and Beta-type Scintillation Probe B.15

B.9 Instrument Response Worksheet - Example Problem 4 . . . B.16

LIST OF TABLES

3.2.1 Smear Sample Data from the 115-F and 117-F Buildings . . . 21

3.2.2 Material Sample Data from the 115-F and 117-F Buildings . . 22

3.2.3 Representative Radionuclide Inventory for the 115-F and and 117-F Buildings 23

4.1.1 Referenced Surface Contamination Ingestion Scenarios . . . 29

5.2.1 Allowable Residual Contamination Level Maximum Organ Dose Conversion Factors 37

5.2.2 Scenario-Specific Allowable Residual Contamination Level Dose Factors 39

5.3.1 Allowable Residual Contamination Level Values Calculated for the 115-F and 117-F Radionuclide Inventory - Restricted and Controlled Use 41

5.3.2 Allowable Residual Contamination Level Values Calculated for the 115-F and 117-F Radionuclide Inventory - Restricted and Controlled Use 42

6.3.1 Comparison of Unrestricted Use Levels for Removable Surface Contamination 46

A.1 Scenario-Specific Allowable Residual Contamination Level Doses for the 115-F and 117-F Facilities - Restricted and Controlled Use A.2

A.2 Scenario-Specific Allowable Residual Contamination Doses for the 115-F and 117-F Facilities - Unrestricted Use . . A.3

ACKNOWLEDGMENTS

The authors would like to thank all of those individuals who helped make this study possible. In particular, we would like to thank Norma Van Houten for her perseverance and patience in preparing and correcting the manuscript. We would also like to express special appreciation of the guidance, assistance and encouragement offered by Ed Watson and Joe Soldat in the development of the methods and philosophy applied in this report.

1.0 INTRODUCTION

The U.S. Department of Energy (DOE) is in the process of decommissioning the 100-F Reactor Area at the Hanford Site. The project is designed to demonstrate decommissioning technology while providing detailed cost, engineering, and safety data useful for determining the final disposition of the remaining Hanford production reactors. A major consideration in developing decommissioning plans is the amount (or level) of radioactive contamination that can be allowed to remain at the site. This report contains a description and the results of a method for determining Allowable Residual Contamination Levels (ARCL) for radionuclides remaining at the 115-F and 117-F facilities.

The ARCL results are based on a scenario/exposure-pathway analysis and compliance with an annual dose limit assigned for each of three specific modes of future use of the land and facilities. These modes of use are restricted, controlled, and unrestricted. For restricted and controlled use, institutional controls are assumed to reduce opportunities for exposure by limiting access to the site. This means that some radioactive materials may be left in place to permit radioactive decay. For this study, restricted use is assumed to last for 100 years, and controlled use for 300 years. For unrestricted use, an individual is assumed to have free access to any remaining facilities or radionuclides at the site.

ARCL values are calculated for unrestricted and controlled use modes for the 115-F and 117-F facilities to provide engineers with a broad data base. This data base should help permit a full safety and cost consideration of decommissioning alternatives, including safe-storage options, for the remaining Hanford production reactor facilities.

A brief description of the 115-F and 117-F facilities at the Hanford Site, current regulations regarding residual contamination, and the history of the development of the ARCL method is given in the remainder of this section. A more complete description of the ARCL method is given in Section 2. Facility descriptions for the 115-F and 117-F facilities and a description of the radiation exposure scenarios developed for each mode of

future use are given in Sections 3 and 4. A description of the dose pathway analysis and the ARCL results are given in Section 5. Finally, the results of the ARCL method are discussed and compared to existing regulations in Section 6.

1.1 THE 115-F AND 117-F FACILITIES

The 105-F reactor is a graphite-moderated, single-pass, water-cooled nuclear reactor that was used to produce weapons-grade plutonium. The reactor and its ancillary facilities are located at the Hanford Site in the 100-F Area along the Columbia River. A map of the 100-F Area is shown in Figure 1.1.1 (Harmon and King 1975). Initial startup of the F reactor occurred during February, 1945. The reactor operated for 20 years, and was shutdown for the last time in June, 1965. Two major ancillary structures associated with the 100-F reactor are the 115-F and 117-F facilities.

The 100-F reactor was designed to operate with a helium and carbon dioxide gas cover over the graphite moderator. The 115-F Gas Recirculation facility maintained the cover gas composition by providing gas circulation through heat exchangers, silica gel beds (for moisture removal), and filters. Reactor cover gas piping ran through the 115-F concrete tunnel from the 105-F reactor to the 115-F Gas Recirculation facility (Harmon and King 1975).

The 117-F Exhaust Air Filter building was installed in 1960 to provide both "absolute" (particulate) and halogen (activated charcoal) filtration of the 105-F reactor exhaust gases. Final discharge of the filtered exhausts was through the 116-F stack (see Figure 1.1.1). Building exhausts ran in underground concrete tunnels from the 105-F reactor to the 117-F building (Harmon and King 1975; Dorian and Richards 1978).

Further descriptions of the 115-F Gas Recirculation facility and the 117-F Exhaust Air Filter building are given in Section 3.0.

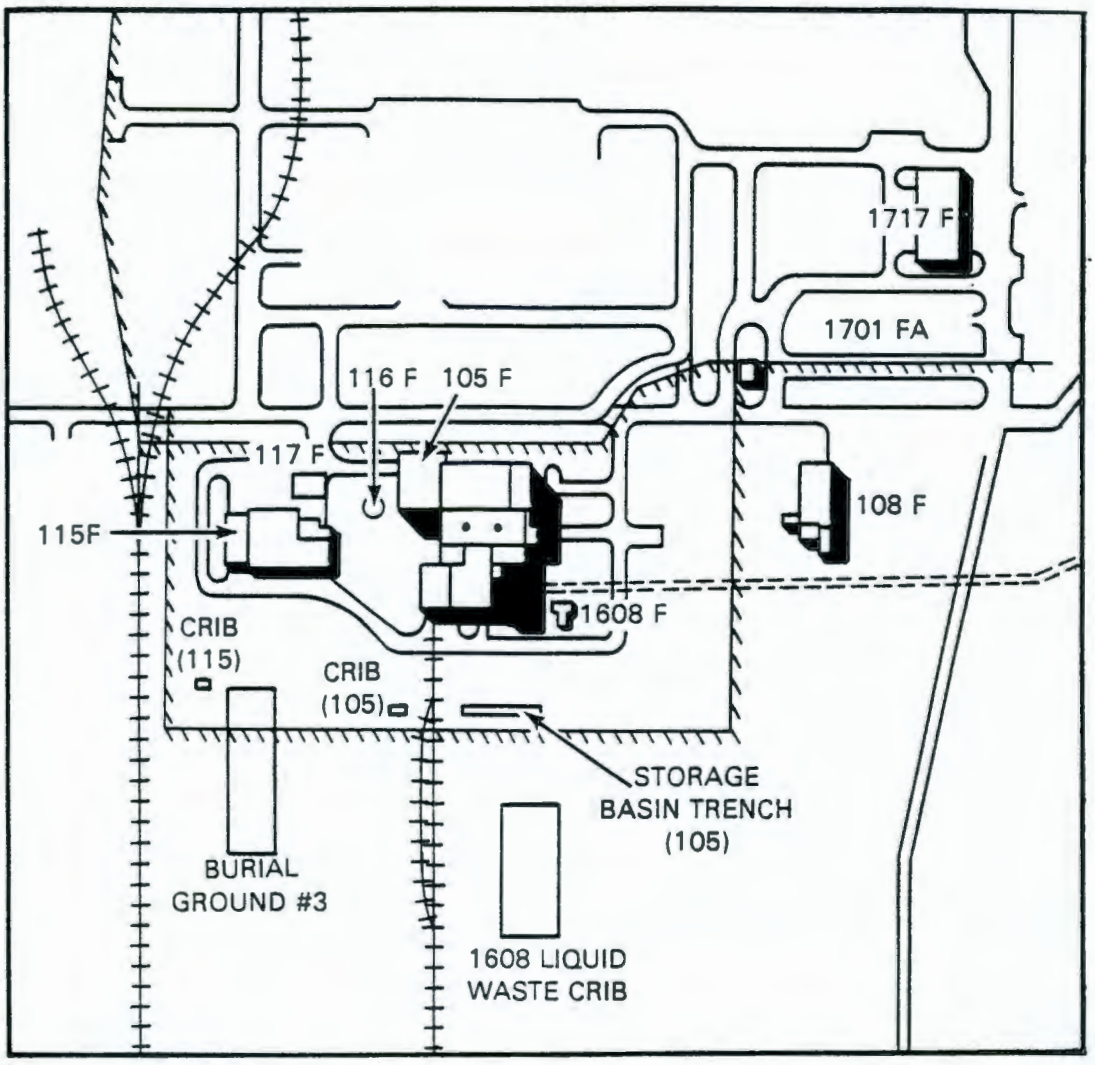

FIGURE 1.1.1. The 100-F Reactor Area at the Hanford Site

1.2 EXISTING DECOMMISSIONING STANDARDS

An examination of existing guidelines and regulations shows that there is a need for a general method of deriving allowable levels of radioactive contamination to permit release of decommissioned nuclear facilities. Currently, there is guidance provided by the U.S. Nuclear Regulatory Commission (NRC) for termination of commercial reactor licenses in Regulatory Guide 1.86 (U.S. AEC 1974), and for release of decontaminated facilities

and equipment from by-product, source, or special nuclear material manufacture (U.S. NRC 1976). Other criteria for operation and/or decommissioning of nuclear facilities have been adopted by the NRC (Federal Register 1981), and the U.S. Environmental Protection Agency (40 CFR 190; 40 CFR 192; Federal Register 1983). In addition, numerous criteria and standards have been developed for soil contamination. In a recent review of such guidance, Mueller, Kennedy, and Soldat (1981) concluded that it was difficult to compare soil standards since each was intended for a different situation, and since different units or bases were used. Most of the soil contamination information appeared to be consistent with the philosophy of maintaining exposures at levels "as low as reasonably achievable" (ALARA).

In general, it is difficult to compare the decontamination limits given in most of the cited standards because each is intended for a specific situation and mixture of radionuclides, and because different units are used. Some of the limits specify radionuclide concentrations, while others specify an allowable dose or dose rate. Methods have been proposed by Healy (1974; 1979), Pacific Northwest Laboratory (Kennedy et al. 1979; Napier 1982), and Oak Ridge National Laboratory (Eckerman and Young 1980) that define techniques for calculating allowable residual contamination levels for any mixture of radionuclides. These methods all rely on a scenario/exposure-pathway analysis based on an acceptable annual dose. The ARCL method applied in this report is such a method.

1.3 HISTORY OF THE ALLOWABLE RESIDUAL CONTAMINATION LEVEL METHOD

The ARCL method has been under development at Pacific Northwest Laboratory since 1976. Its first application was as part of a conceptual decommissioning study conducted for the NRC (Schneider and Jenkins 1977). The method has continued to evolve as the NRC conceptual decommissioning studies considered a variety of nuclear facilities ranging from fuel fabrication, through reactor operation, to low-level waste disposal, and independent spent-fuel storage. Example applications of the ARCL method to reactors that directly relate to this study are contained in reports by

Smith, Konzek, and Kennedy (1978), Oak et al. (1980), and Konzek (1982).

In a recent document by Napier (1982), the ARCL method is formally described and the results of example calculations are presented. In addition, Napier (1982) presents a comparison of ARCL results with other recommendations. In a related application, Kennedy et al. (1982) investigates transuranic advanced disposal systems and applies the ARCL method to develop preliminary ^{239}Pu waste disposal criteria for the Hanford Site. These criteria relate depth of disposal to allowable concentration using human intrusion scenarios.

The ARCL method described and applied in this report to the 115-F and 117-F facilities is similar to the methods used by the NRC to develop criteria for shallow-land burial grounds (U.S. NRC 1982). The major differences are that the NRC provides a "generic" classification system for low-level waste disposal and this report attempts to rely on site-specific conditions for unrestricted use of contaminated soil sites.

2.0 THE ALLOWABLE RESIDUAL CONTAMINATION LEVEL METHOD

The objective of the analysis of the Allowable Residual Contamination Levels (ARCL) of radionuclides in soil or facilities is the determination of whether radioactively-contaminated sites require further decontamination or remedial action prior to release. The results of the analysis may also be used to indicate the general magnitude of any remedial actions required prior to the release. The basic approach taken to calculate the ARCL is presented in this section.

The calculation of ARCL values for radionuclides is dependent on the physical characteristics of each individual contaminated site (size, radionuclide inventory, presence of structures), on the radiation dose limit determined to be "acceptable", and on the scenarios of human exposure judged both to be possible and to result in upper bounds of exposure. The physical characteristics can be determined from a comprehensive site description. Dose limits specifically for decommissioning have not yet been set by regulatory agencies. The draft generic environmental impact statement on decommissioning nuclear facilities (U.S. NRC 1981) contains a recommendation that the allowable residual radioactivity level for facility release be based on the dose anticipated to be received by individuals who use that facility. The NRC has further recommended that release levels after decommissioning should be set less than or equal to 10 mrem/yr to the maximum-exposed individual (Federal Register 1981). As set forth in the Energy Reorganization Act of 1974, the U.S. Environmental Protection Agency (EPA) has responsibility for establishing radiation dose standards for the protection of public health and safety. The EPA has not yet instituted these criteria and is not scheduled to do so until 1984 (U.S. NRC 1981). For this report, three possible modes of future use of the site are considered; restricted, controlled, and unrestricted. For the restricted and controlled modes, an example dose limit of 500 mrem/yr is used in this report because the sites will still be under government supervision. For unrestricted use, an example dose limit of 10 mrem/yr is used. These use modes are further described in Section 2.1.

2.1 SUMMARY OF THE METHOD

A simplified logic diagram of the ARCL method is shown in Figure 2.1.1. As illustrated, the necessary prerequisite to any analysis is a characterization of the contaminated area, including location, size, radionuclide inventory, depth of overburden (for contaminated soil zones), and descriptions of existing barriers to waste migration and to human intrusion. These details, in conjunction with a description of the proposed release mode, allow preparation of realistic site-specific radiation-exposure scenarios. The heart of the ARCL method is an analysis of the potential maximum annual radiation dose to an exposed individual. If the potential dose to the individual is less than the design objective dose limit, then no further actions are required for that site. If it is predicted that the potential dose may exceed the design objective, the need for further decontamination or remedial action is indicated.

The general method for calculating the ARCL of radionuclides consists of four steps:

1. From the information presented in the site description, develop a plausible scenario (or set of scenarios) for transfer of contamination to an individual consistent with the proposed future-use mode.

2. From the radionuclide inventory given in the site description, calculate the maximum annual radiation dose for the site and future-use mode exposure scenario.

3. Calculate the ARCL for all nuclides in the mixture, back calculating from the maximum annual dose. This calculation is performed for those times that may maximize the potential exposure.

4. Test whether application of additional engineered barriers or removal of certain areas of contamination will improve the site characteristics. Note: This test is not demonstrated in this report.

The primary objective of the ARCL is a screening determination of whether or not an individual facility or site requires further decontamination or remedial actions. A secondary objective is to permit a

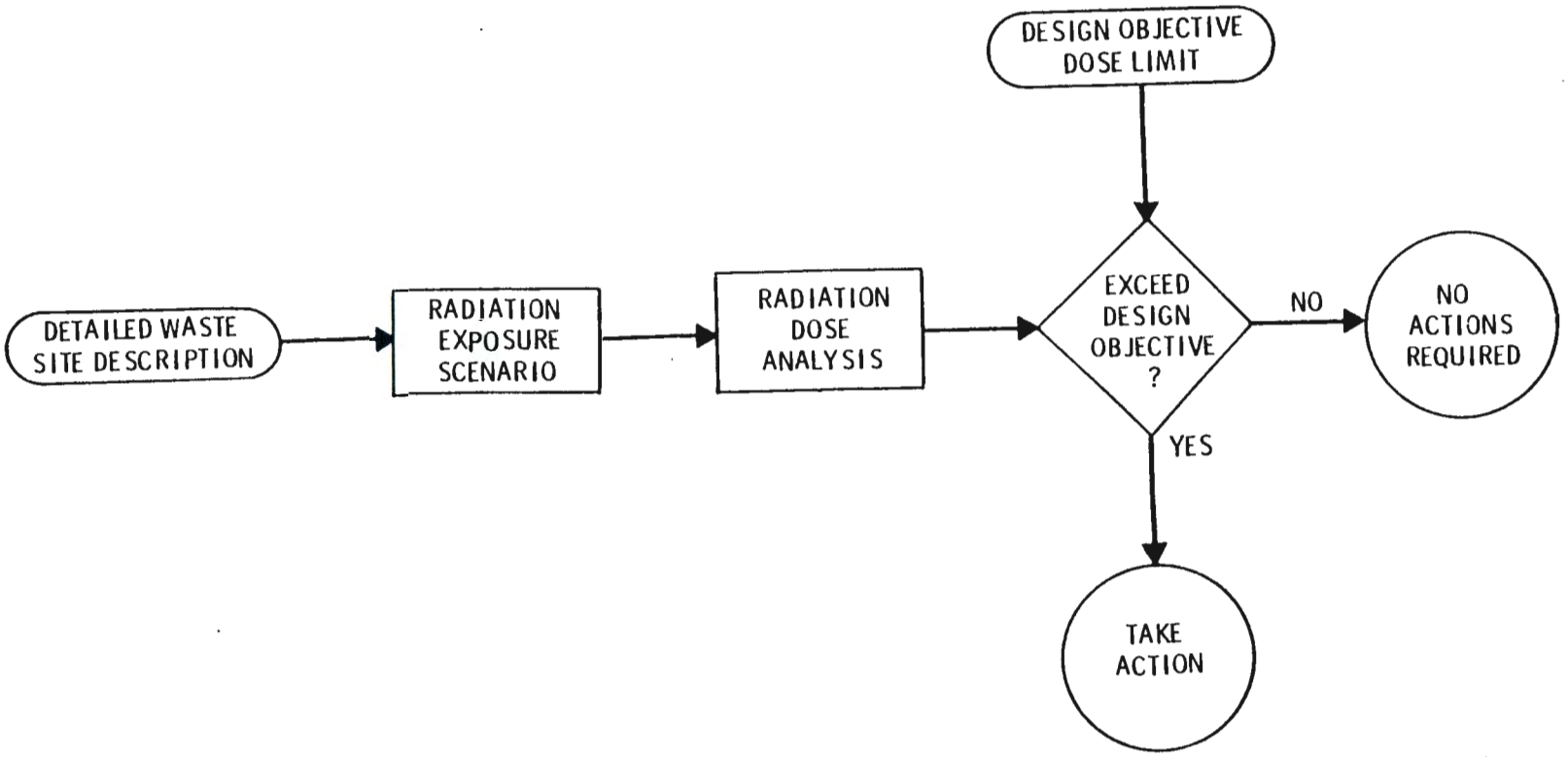

FIGURE 2.1. Allowable Residual Contamination Level Method Logic Diagram

determination of what remedial actions could be effective. The ARCL method does not choose the most appropriate disposal alternative, nor does it automatically provide the best means of hazard mitigation. Analysis of remedial actions is simply an extended analysis of a site with modified physical characteristics.

The extent of proposed remedial actions will depend on the possible uses of the land or facilities that are projected. For the purposes of this report, three possible modes of future use are considered, each with possible scenarios that prove limiting. These future-use modes are restricted, controlled, and unrestricted. For restricted use, governmental control of the site is assumed to continue for the next 100 years. During the 100-year period, access to the site is limited by fences, markers, and intrusion barriers. The site is routinely patrolled to detect unauthorized intruders. Following the 100-year period, the site is assumed to be cleaned to the unrestricted-use levels. The second mode is controlled use. Partial institutional controls are assumed to limit human activities at the site for a period of 300 years. Minimal surveillance and maintenance is assumed, and historical records, markers, and zoning restrictions prevent major disruptions of the site. Following the 300-year period, the site is assumed to be cleaned to unrestricted-use levels. The unrestricted-use mode, besides following the other two modes, can be postulated to begin immediately following decommissioning. No controls remain over use of the site or any remaining contents. Details of these release modes are given in Section 2.3.

2.2 ALLOWABLE RESIDUAL CONTAMINATION LEVELS

The design objective is a limit on the maximum annual radiation dose to an individual. The annual dose is a function of the quantity ard spectrum of contaminant radionuclides and the exposure pathways to man. The design-objective dose limit is converted to the site-specific, measurable quantity (the ARCL, in dpm/100 cm^2 for surfaces or pCi/gram for soils) through applicable exposure scenarios. Each of these concepts is described in this section.

2.2.1 Maximum Annual Dose

There are four basic categories of public radiation doses that could be calculated to measure public exposure. These are:

1. One-year dose from one year of exposure (external plus internal). This is the dose currently used for comparison with occupational exposure standards and the one originally used for comparison with public standards.

2. Committed dose from one-year external exposure plus extended internal dose accumulated as a result of a one-year intake (ingestion plus inhalation). Normally, a 50- or 70-year dose commitment period is used. This dose is the one currently being used by most of those who calculate public doses, and is the one used for occupational record-keeping in 10 CFR Part 20 (1982).

3. Accumulated dose from a lifetime (50 or 70 years) of external exposure plus intake via ingestion and inhalation. This includes the effects of radionuclide accumulation or decay in the environment during the exposure period. This dose is most closely relatable to health effects from radiation exposure.

4. Maximum annual dose during a lifetime (50 or 70 years). This dose is calculated for each year of exposure accounting for each year's external exposure plus the internal dose from nuclides taken in during the year of interest and all previous years. The maximum annual dose is identified by inspection for each organ. This type corresponds most closely to the existing guides for occupational and public exposure which contain standards for annual radiation dose.

The method used in this report, for determining ARCL, is a comparison of a calculated maximum annual dose received by a maximally exposed individual with annual dose limits. When internal exposure from inhalation and/or ingestion is the dominant dose contributor during continuous exposure, the maximum annual dose may not occur in the first year. Thus,

for continuous exposure, a first-year dose may not predict the most restrictive contamination level. Alternative methods might include calculation of the dose commitment from one year of exposure or calculation of the lifetime integrated dose from continuous exposure; however, no recognized standards limiting these types of doses exist. Thus, the maximum annual dose is appropriate for use in determining ARCL.

2.2.2 Radiation Exposure Pathways and Exposure Scenarios

The potential routes through which people may be exposed to radionuclides or radiation are called "exposure pathways". The general pathways can be thought of as external exposure, inhalation, and ingestion. Doses from external exposure result from direct radiation from air, water, soil, and contaminated structures. Doses from inhalation can result from breathing aerosols released from facilities or from resuspended materials. Doses from ingestion are water, fish, waterfowl, game, food crops, animal products, or direct consumption of small amounts of material transferred from contaminated surfaces to the hands. The ARCL for individual sites is based on the sum of exposures through all the selected pathways in a radiation exposure scenario analysis.

The key to the ARCL method, as shown in Figure 2.1.1, is an analysis of the maximum annual radiation dose to an individual. This dose is calculated by summing the doses from many exposure pathways. The pathways are chosen depending on the ways an individual could be exposed for each release mode. The collection of appropriate pathways is called an "exposure scenario". The ability of the user of the method to choose the exposure scenario is what gives the ARCL method the flexibility to handle many types of sites, inventories, and locations.

Preliminary investigations have been performed to examine locations where an individual might reside and receive a radiation dose from contaminated sites. In a previous study of conditions at the Hanford Site, individuals were postulated to live downwind and downstream at distances of 10 km (6.2 miles) and 1 km (3280 feet), and onsite (Napier 1982). For all times and for all exposure scenarios, radiation dose rates to the

individuals living out of the immediate vicinity of the contaminated areas were found to be orders of magnitude smaller than those received by the onsite individual. Thus, the onsite exposure scenarios were determined to be the most critical. For the three future-use modes examined in this report, the general types of exposure scenarios are as follows:

- restricted use
  - recreation (if allowed)
  - picnicking
  - hunting and harvesting
  - inadvertent intruder
  - deliberate intruder
- controlled use
  - inadvertent intruder
  - deliberate intruder
  - resident (if allowed)
  - farmer (if allowed)
- unrestricted use
  - transient
  - permanent resident
  - well drilling, excavation
  - contact with soil, inhalation of resuspended material
  - drinking of well water
  - backyard garden
  - inadvertent intruder
  - intentional intruder
  - resource recovery
  - recovered resource use.

The potential for radiation doses to individuals have been examined for each of these general scenarios. The most restrictive are examined in detail in this report. A summary of each scenario follows. More detail on the required assumptions is given in Section 4.0.

2.3 FUTURE-USE MODES

This section contains a discussion of the future-use modes assumed for the Hanford 100-F Area.

2.3.1 Restricted Use

In the first future-use mode, it is assumed that the 100 Areas will remain a valuable resource to DOE for the near future, and that restricted use of the site will continue for the next 100 years. The facilities are assumed to be decontaminated (if necessary) to the allowable residual contamination levels for restricted use and left in a safe-storage condition. Institutional controls are assumed to last for 100 years. During the 100 years of control, access to the site and facilities is assumed to be limited by fences, markers, and intrusion barriers (such as locked doors and sealed access points). Security surveillance is assumed to continue and minor maintenance of fences and intrusion barriers is assumed to be provided if required. After 100 years, the site is considered to be released for unrestricted use. This means that the contamination levels will have to be reduced to the unrestricted use allowable residual contamination levels, if they have not been reached through radioactive decay.

During restricted use only an unauthorized intruder-explorer exposure scenario is assumed. The intruder is assumed to enter the facility and explore for a limited time. His exposure pathways are: direct exposure to penetrating radiation, inhalation of resuspended material, and ingestion of removable material transferred to the hands. The allowable residual contamination levels for restricted use are calculated based on an example dose to this intruder of 500 mrem.

2.3.2 Controlled Use

The second release mode accounts for a long period of controlled use of the site prior to unrestricted release. This case is intended to describe a safe storage condition where partial institutional controls may help limit human activities in the 100 Areas for a period of 300 years. The facilities are assumed to be decontaminated to the allowable

controlled-use, residual contamination level and left in a safe-storage condition. Minimal surveillance and maintenance is assumed to occur during this 300-year period. Marker systems, historical records, and zoning restrictions (or other governmental controls) are assumed to partially limit human intrusion. Radioactive materials are assumed to be left in a safe-storage condition of higher integrity than considered for the restricted-use mode.

During controlled use, unauthorized intrusion is assumed to occur through an intruder-discovery scenario. For this scenario, an intruder is assumed to enter the facility and begin light construction activities. These activities are assumed to cease when the existence of stored radioactive materials is realized or the intruder is discovered by the agency controlling the use of the site. The individual is assumed to be exposed by the same exposure pathways for the restricted use mode, with appropriate modifications to the exposure scenarios. The allowable residual contamination levels for controlled use of the site and facilities are calculated based on an example dose to this intruder of 500 mrem.

2.3.3 Unrestricted Use

The last mode considered is designed to account for unrestricted use of the site and facilities. Unrestricted use is assumed to occur as the final outcome of the first two modes considered (i.e. after 100 years of restricted use and after 300 years of controlled use), and immediately for the third mode (as the result of dismantlement). Thus, unrestricted-use allowable residual contamination levels are calculated for the mixture of radionuclides encountered immediately and as modified by radioactive decay for periods of 100 and 300 years.

During unrestricted use of the site and facilities, the maximum individual is assumed to be exposed as a result of three scenarios. These scenarios are designed to consider resource-salvage activities, resource-recycle activities, and residential/home-garden activities. The residential/home-garden scenario is designed to be similar to the scenarios considered by the NRC in the Draft Environmental Impact Statement in sup-

port of 10 CFR Part 61. The allowable residual contamination levels calculated for unrestricted use are based on an example allowable organ dose of 10 mrem per year to the most restrictive organ.

3.0 FACILITY DESCRIPTIONS

The 115-F Gas Recirculation facility and the 117-F Exhaust Air Filter building are the major contaminated ancillary structures associated with the 105-F Reactor located in the 100-F Area of the Hanford Site. Our evaluation of Allowable Residual Contamination Levels (ARCL) for these facilities required a review of the facility descriptions and radiological characterization data. The following sections contain a brief summary of the physical and radiological characteristics of these sites.

3.1 PHYSICAL CHARACTERISTICS OF THE 115-F AND 117-F-FACILITIES

The 105-F reactor was designed to operate using a graphite moderator with a nonradioactive, inert (helium and carbon dioxide)-gas cover. The function of the inert-gas cover was to: 1) remove moisture and gases from the reactor core, 2) transfer heat from the graphite to the process tubes, 3) control reactivity, and 4) allow detection of water leaks within the reactor (Harmon and King 1975). A general flow diagram for the cover gas through the 115-F Gas Recirculation facility is shown in Figure 3.1.1 (Hanford Atomic Products Operation Staff 1963). Gas losses were minimized using low-pressure recirculation methods. The gas composition was maintained by gas circulation through heat exchangers, silica gel beds (for moisture removal), and filters. A gas make-up system was also available for gas replacement. Reactor cover-gas piping ran in the 115-F concrete tunnel from the 105-F reactor to the 115-F Gas Recirculation facility. This tunnel is about 11 m (36 ft) wide by about 2.4 m (8 ft) high and is about 100 m (about 330 ft) long (Harmon and King 1975). The 115-F tunnel has thick-wall concrete construction with a central drain that connects to the 1608-F waste water pump house.

Building exhaust air from the 105-F reactor was directed to the 117-F building where air filtration and flow-control systems were located. The exhaust air was primarily from the reactor building ventilation system to ensure a fresh uncontaminated air supply and to maintain low levels of airborne contamination. The ventilation system was designed to move air

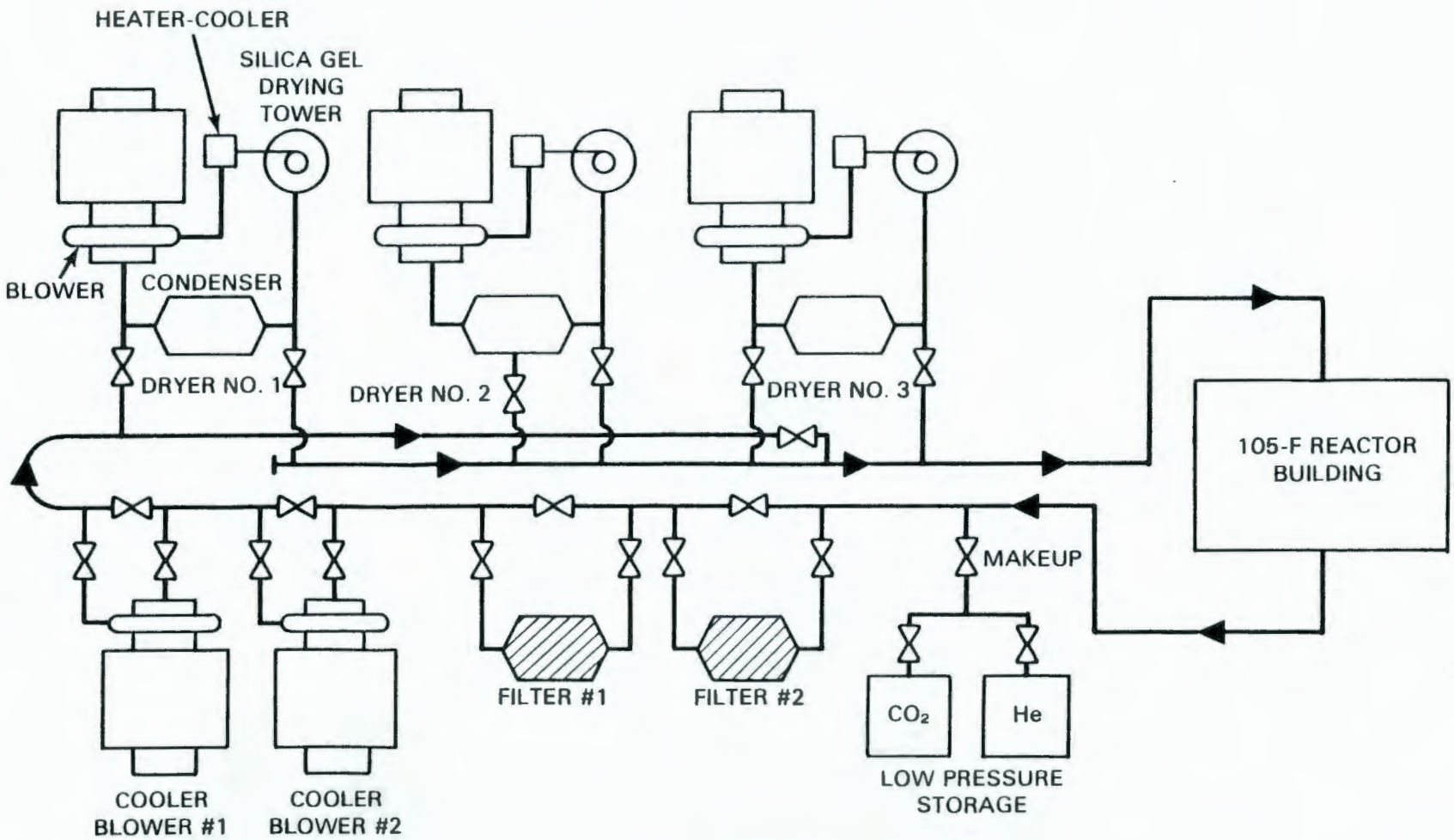

FIGURE 3.1.1. Cover Gas Flow Diagram for the 100-F Reactor

from the least contaminated areas through the more contaminated areas of the reactor building. The 117-F filter building was installed in 1960 to provide both "absolute" (particulate) and halogen (activated charcoal) filtration of the exhaust gases. Final discharge of the filtered exhaust gas was through the 60-m (200-ft) 116-F stack (Dorian and Richards 1978). Two identical filter cells were located in the 117-F building. They were separated by a two-story central operating galley. The 117-F building is a reinforced concrete structure located almost entirely underground. The 117-F building dimensions are about 18-m (59-ft) long by 12-m (39-ft) wide by 11-m (35-ft) high (Harmon and King 1975). Building exhausts ran in underground concrete tunnels from the 105-F Reactor building to the 117-F building, and from the 117-F building to the stack. The tunnels are about 1.5-m (5-ft) wide and 3.5-m (11-ft) high, and run a combined total distance of about 100 m (about 330 ft). Steel turning vanes are located in the inlet and exhaust ends of the tunnels to direct the air flow.

Further descriptions of the 115-F and 117-F facilities, along with descriptions of the other facilities in the 100-F Area, can be found in documents by the U.S. DOE (1980), Dorian and Richards (1978), and Harmon and King (1975).

3.2 RADIOLOGICAL CHARACTERISTICS OF THE 115-F and 117-F FACILITIES

Radiation surveys of the contaminated 100-F Area ancillary buildings began in August 1976. The surveys collected data on direct exposure rates from contaminated floors, equipment, piping, buildings, and tunnels using portable survey instrumentation standards at that time to the Hanford Site. Standard instrumentation consisted of a mica window GM probe for smearable and fixed measurements (readings reported in counts per minute), a PAM for alpha measurements (readings reported in disintegrations per minute), and a CP for direct exposure rate measurements (readings reported in mR per hour). Removable contamination was detected using smear samples taken over an area of 100 cm^2 (Dorian and Richards 1978). Detailed radiological analyses of selected smears were performed to identify the radionuclides present.

The general conclusions reported by Dorian and Richards (1978) for the 115-F and 117-F facilities are:

- general background exposure rates in the facilities are less than 1 mR/hr
- qualitative smear samples range from less than 100 counts per minute (cpm) to 10,000 cpm (measured with the GM probe)
- beta counts on smear samples were generally less than 100 disintegrations per minute (dpm) per 100 cm^2 with a maximum of 6300 dpm/100 cm^2
- smearable alpha contamination was generally less than 5 dpm/100 cm^2, with a maximum value of 20 dpm/100 cm^2
- the primary radionuclides detected by the GM probe were determined to be ^{90}Sr, ^{137}Cs, with secondary contributions from ^{134}Cs, ^{152}Eu, ^{154}Eu, and ^{155}Eu
- ^{14}C and ^{3}H contamination was detected to a maximum removable level of 3.5×10^4 pCi/100 cm^2 for ^{14}C, and 7.3×10^2 pCi/100 cm^2 for ^{3}H.

A summary of the smear sample data for the 115-F and 117-F buildings as reported by Dorian and Richards (1978), in units of pCi/100 cm^2, is given in Table 3.2.1. The radionuclide with the highest reported removable surface contamination level was ^{14}C. In addition to the smear data, samples from one of the silica gel dryers and condenser scale were also analyzed. The results reported by Dorian and Richards (1978), in units of pCi/g, are shown in Table 3.2.2.

For these samples, the radionuclide present in the greatest concentration was ^{3}H in the silica gel dryer. The radionuclides shown in Table 3.2.1 and 3.2.2 are used in a representative radionuclide inventory to determine ARCL values for the release modes considered. The representative radionuclide inventory for the 115-F and 117-F facilities is shown in Table 3.2.3. The information in this table is a composite of the characterization data reported by Dorian and Richards (1978). Because the calculated ARCL will determine the allowable contamination level, only the mixture of

TABLE 3.2.1. Smear Sample Data From The 115-F and 117-F Buildings[a]

Smear Location	Radionuclide (pCi/100 cm^2)							
	^{3}H	^{14}C	^{60}Co	^{90}Sr	^{137}Cs	^{152}Eu	^{154}Eu	$^{239/240}Pu$
115-F Tunnel								
• Inside blanked valve from purification room	-[b]	-	-	1.2E+1[c]	-	-	-	-
• North end piping	6.4E+02	4.3E+03	-	-	-	-	-	-
115-F Dryer Rooms								
• Rm. 1 floor of silica gel tower	-	-	-	2.2E+01	1.4E+02	-	-	1.7E-01
• Rm. 2 floor at condensate drain	6.6E+02	9.8E+03	-	-	-	-	-	-
117-F Inlet Tunnel								
• Floor between cells	-	-	3.5E+01	3.1E+01	8.8E+01	8.9E+02	3.4E+02	1.5E+00
• Floor at 2nd turning vanes	7.3E+02	3.5×10^4	-	-	-	-	-	-

(a) Based on data from Dorian and Richards (1978).
(b) A dash indicates that no data were reported.
(c) Where 1.2E+1 = 1.2×10^1

TABLE 3.2.2. Material Sample Data From The 115-F and 117-F Buildings[a]

Sample Location	Radionuclide (pCi/g)						
	^{3}H	^{60}Co	^{134}Cs	^{137}Cs	^{152}Eu	^{154}Eu	^{155}Eu
Rm. 1, Silica Gel	1.6E+10[b]	2.9E+01	-[c]	1.2E+03	-	2.5E+06	-
Rm. 2, Scale from inside of condenser	-	1.0E+01	4.9E-9	1.8E+03	8.3E-01	-	4.9E+01

(a) Based on data from Dorian and Richards (1978).
(b) A dash indicates that no data were reported.
(c) Where 1.6E+10 = 1.6×10^{10}

radionuclides present and their relative concentrations are important. Thus, the relative activities of the eight radionuclides in the mixture are calculated based on decay periods of 0, 100, and 300 years. For soil contamination, the mixtures and relative concentrations in Table 3.2.3 are used with assumed units of pCi/g of soil.

TABLE 3.2.3. Representative Radionuclide Inventory for the 115-F and 117-F Buildings

Radionuclide[a]	Relative Activity at T = 0 yr (Ci/m^2 or pCi/g)	Relative Activity Decayed to T = 100 yr (Ci/m^2 or pCi/g)	Relative Activity Decayed to T = 300 yr (Ci/m^2 or pCi/g)
^{3}H	1.9E-2[b]	7.9E-5	1.4E-9
^{14}C	9.3E-1	9.2E-1	9.0E-1
^{60}Co	9.3E-3	1.5E-8	6.9E-20
^{90}Sr+D[c]	8.3E-4	6.6E-5	4.3E-7
^{137}Cs+D	3.7E-3	3.7E-4	3.7E-6
^{152}Eu	2.4E-2	1.5E-4	5.2E-9
^{154}Eu	9.1E-3	2.6E-6	3.1E-13
^{239}Pu	4.0E-5	4.0E-5	4.0E-5
TOTALS	1.0	9.2E-1	9.0E-1

(a) Based on information in Dorian and Richards (1978).
(b) Where 1.9E-2 = 1.9×10^{-2}.
(c) +D means plus short-lived daughter products.

4.0 RADIATION EXPOSURE SCENARIO ANALYSIS

The calculation of Allowable Residual Contamination Levels (ARCL) for decommissioning the 115-F and 117-F facilities is based on an evaluation of the potential radiation exposures resulting for each of three modes of future use. These modes of use are restricted, controlled, and unrestricted. For restricted and controlled use, institutional controls are assumed to reduce opportunities for exposure by limiting access to the site. Some radioactive materials are left in place and the facilities are left in a safe storage condition. Restricted use is assumed to last for 100 years, and controlled use for 300 years. For unrestricted use, an individual is assumed to have free access to any remaining facilities or radioactive materials at the site.

Exposures are estimated based upon the representative mixture of radionuclides based on the characterization data from the 115-F and 117-F facilities, and the exposure scenarios determined for each mode of use. Figure 4.1.1 contains a summary of the radiation exposure scenarios considered for the three modes of use. For unrestricted use, the allowable residual contamination levels for each radionuclide are determined using the most restrictive of the three scenarios shown in Figure 4.1.1. The following sections contain discussions of the radiation exposure scenarios considered for each mode of future use.

4.1 RESTRICTED-USE MODE

As shown in Figure 4.1.1, the controlling exposure scenario during 100 years of restricted use is the intruder-explorer scenario. Because institutional controls are still in place during restricted use, the exposure conditions for the intruding individual are assumed to be very limited. For this scenario, an unauthorized intruder is assumed to gain entry into a safe-storage type facility. The intruder is assumed to be motivated by curiosity and is exposed to radiation or radioactive materials by three major pathways. They are direct exposure to penetrating radiation, inhalation of resuspended removable surface contamination, and direct ingestion

USE MODE	EXPOSURE SCENARIO: INTRUDER-EXPLORER	INTRUDER-DISCOVERY	RESOURCE SALVAGE	RESOURCE RECYCLE	RESIDENTIAL-HOME GARDEN
RESTRICTED USE • ENGINEERED FACILITIES	●				
CONTROLLED USE • ENGINEERED FACILITIES		●			
UNRESTRICTED USE • ENGINEERED FACILITIES			●	●	
• UNCONFINED SOIL					●

FIGURE 4.1.1. Exposure Scenarios for the Decommissioned 115-F and 117-F Facilities

of removable surface contamination transferred to the hands. For all dose estimates, the individual is assumed to remain in the facility for eight hours.

The direct exposure rate encountered by the intruder for various contamination levels is calculated using the model developed for decommissioning a reference room at a BWR (Oak et al. 1980). External dose equivalent factors are calculated for the mixtures of radionuclide at the 115-F and 117-F facilities using the ISOSHLD (Engel et al. 1966; Simmons et al. 1967) computer program. Because most of the safe-storage facility is assumed to be filled with radioactive wastes and concrete, access to the facility will be very limited. A sensitivity analysis was conducted for the reference room model to determine the relationship between room size and dose rate (Oak et al. 1980, p. F-16). The results (shown in Figure 4.1.2) indicate a factor of at most two increase in dose rate for

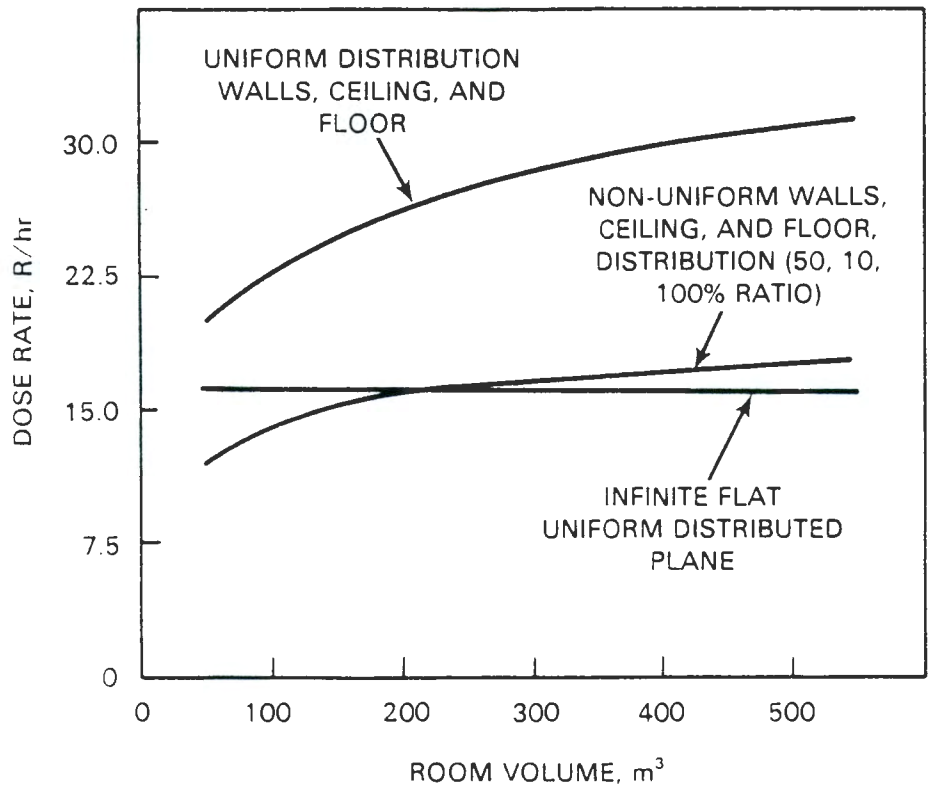

FIGURE 4.1.2. Dose Rate as a Function of Room Volume for a ^{60}Co Deposition of 1 Ci/m^2 (Oak et al. 1980, p. F-16)

^{60}Co contamination from small to large rooms, assuming that the room has 3-m high walls. For this study, it is assumed that the intruder gains access to a room with dimensions of 6 x 6 x 3 m for his entire exposure period. This room size may be larger than an actual room encountered, but it serves as a reasonable basis for the scenario analysis.

As a result of the activities of the intruder within the facility, the airborne dust concentration, χ in Ci/m^3, is expressed as a function of the resuspension rate and room ventilation by (Healy 1971, p. 80):

$$\chi = \frac{fA\Omega}{Vn} \qquad (4.1)$$

where f • the resuspension rate, h^{-1}

A • the floor surface area of the room, m^2

Ω • the floor surface contamination level, Ci/m^2

V • the volume of air in the room, m^3

n • the rate of room air exchange, h^{-1}.

(NOTE: $X/\Omega = K$, the resuspension factor, m^{-1})

The following assumptions are made to calculate the air concentrations from resuspension for the intruder-explorer scenario:

- The average resuspension rate for a vigorous intruder equals 3×10^{-4} h^{-1} (Healy 1971, p. 32).
- The room ventilation rate is 1 air exchange per hour, representing a reasonably air-tight room and accounting for the entry way created by the intruder.
- The intruder is assumed to gain access to a room with dimensions of 6 x 6 x 3 m, with a total air volume of 100 m^3.

The last exposure pathway considered for the intruder-explorer scenario is direct ingestion of removable surface contamination transferred to the hands. Because of a lack of data, previous studies that have considered this pathway have relied on assumed ingestion rates. A summary of the specific assumptions found in previous studies is given in Table 4.1.1. For this study, the intruder is assumed to ingest removable surface contamination at a rate of 10^{-4} m^2/h, for a total of 8×10^{-4} m^2 of removable surface contamination during an eight-hour exposure period.

In addition to the three exposure pathways analyzed in this study, a potential fourth pathway was considered, but not analyzed. This pathway is penetration of radionuclides through the skin by either direct absorption (as in the case of ^3H or radionuclides suspended in solvents) or by puncture wounds. The frequency of skin penetration situations is difficult to predict for workers in a radiation zone, and even more difficult to predict for intruders. However, Dunster (1962) concluded that skin penetration events do not need to be taken into account in setting permissible

limits of skin contamination if direct irradiation and ingestion of contamination transferred to the hands have been accounted for. Thus, we have made no further attempts to account for skin penetration in this analysis.

4.2 CONTROLLED-USE MODE

The exposure scenario analyzed for the controlled use mode (as shown in Figure 4.1.1) is the intruder discovery scenario. The intruder is assumed to enter a safe storage facility and begin salvage operations. His activities are assumed to continue for a total of 20 hours before either he is discovered and removed, or he realizes that he is in a radioactive waste facility and leaves. The intruder is assumed to have the same exposure

TABLE 4.1.1. Referenced Surface Contamination Ingestion Scenarios

Author and Reference	Ingestion Rate	Comments
(Dunster 1962)	10^{-3} m^2/day	Chronic ingestion of $(MPC)_w$ values of ^{226}Ra, ^{90}Sr, and ^{210}Pb to derive permissible levels of skin contamination
(Gibson and Wrixon 1979)	10^{-3} m^2/day	Chronic ingestion. No data available to improve upon Dunster's model - $(MPC)_w$ analysis
(Healy 1971)	10^{-4} m^2/h (8 h)	Chronic ingestion during 8 hrs. for workers, 24 hrs. for members of the public. These are arbitrary assumptions in an effort to account for presumed higher intake by children, i.e., 2.4×10^{-3} m^2/day.
(Kennedy et al. 1981)	10^{-4} m^2/h	Chronic ingestion of removable surface contamination on transportation containers. Dose estimates for workers and members of the public were reported for radiopharmaceutical, industrial source, nuclear fuel cycle, and low-level waste transportation containers.

pathway conditions identified for the intruder-explorer scenario modified to reflect 20 hours of exposure. The exposure pathways considered are direct exposure to penetrating radiation, inhalation of resuspended removable surface contamination, and direct ingestion of removable surface contamination transferred to the hands.

4.3 UNRESTRICTED-USE MODE

For unrestricted use, three exposure scenarios have been defined as shown in Figure 4.1.1. They are: resource salvage, resource recycle, and residential/home-garden. The following sections contain descriptions of these unrestricted-use exposure scenarios.

4.3.1 Resource Salvage Exposure Scenario

This exposure scenario is designed to represent the potential activities of an individual engaged in salvage operations in any part of the facility remaining during the unrestricted-use mode. Because there are no controls over the individual, it is assumed that he enters the facility and begins salvage operations without restraint. The individual intruder is assumed to spend 2000 h during a year working at salvage in the facility. The exposure pathways considered are direct exposure to penetrating radiation, inhalation of resuspended contamination, inhalation of airborne contamination during salvage operations, and ingestion of removable surface contamination transferred to the hands.

The direct exposure rate encountered by the individual is calculated using the same room model and methods discussed for the intruder-explorer scenario, with appropriate modifications. The individual is assumed to work in a room with dimensions of 6 x 6 x 3 m for the entire 2000 h of exposure.

The resuspended concentration of removable surface contamination is estimated using Equation 4.1 and the same assumptions as listed for the intruder-explorer scenario. To estimate the potential impact of inhalation of airborne material during salvage operations, estimates of airborne

contamination levels are required. The airborne radioactivity during cutting operations is estimated using (Oak et al. 1980, p. N-15):

$$Q_C = LkC_S \qquad (4.2)$$

where Q_C • the airborne radioactivity from cutting contaminated pipe or equipment, Ci

L • the length of cut, m

k • the kerf width, m

C_S • the surface radioactivity concentration, Ci/m^2.

Equation 4.2 is based on the conservative assumption that all of the surface contamination in the kerf is vaporized and made airborne during the cutting operation. The assumed cutting method is the oxyacetylene torch, and the assumed cutting rate is 10 m/h. The kerf width for oxyacetylene torch cutting is taken to be 6.4×10^{-3} m (Oak et al. 1980, p. N-14). A total of 400 h of cutting contaminated piping is assumed for the salvage operations. This equates to about 4000 m of cut length.

The individual is assumed to ingest removable surface contamination transferred to the hands during salvage operations. The analysis used is similar to that discussed for the intruder-explorer scenario. The individual ingests surface contamination at a rate of 10^{-4} m^2/h for 2000 h, for a total of 0.2 m^2.

4.3.2 Resource Recycle Exposure Scenario

This exposure scenario represents the potential for dose to individuals resulting from distribution of the materials salvaged in the resource salvage scenario. Because there are no restraints on the materials recovered in the unrestricted use-mode, these materials are assumed to enter routine commerce. Data presented in the Draft Environmental Statement Concerning Proposed Rulemaking Exemption From Licensing Requirements for Smelted Alloys Containing Residual Technetium-99 and Low-Enriched Uranium (U.S. NRC 1980), indicate that the operations with the greatest potential dose to a individual occur during smelting and manufacture of

consumer products. During these operations, the worker in a smelter or foundry is exposed to piles of metal scrap, metal ingots, and accumulated finished products. He is additionally exposed to metal fumes and particulates. Radiation dose factors for these operations have been prepared by O'Donnell et al. (1978) for a study of dose to man from recycle of metals reclaimed from decommissioned nuclear power plants. From the information in this reference, it appears that the individual with the greatest potential for exposure is one working in a metal scrap yard.

The dose a worker may receive is directly dependent on the quantity of material assumed to be recovered. The individual in the resource salvage scenario is assumed to work 2000 h/yr. The market price for scrap iron is about $0.09/kg, so for the individual to make a reasonable income, he would need to recover nearly 200 Mg/yr of scrap iron (about 1 Mg/d). This quantity of material is assumed to be melted and made into consumer products (such as frying pans). A factory worker is assumed to work in a scrap yard, as described in O'Donnell et al. (1978), and to be exposed to the threshold limit value (TLV) of metal particulates (5 mg/m^3), for a period long enough to process 200 Mg of recovered material.

4.3.3 Residential/Home-Garden Exposure Scenario

This scenario is designed to represent the unrestricted use exposure conditions of an individual who resides on the site and engages in home gardening activities for 50 years. Any contamination remaining on the site is assumed to be mixed in the unconfined soil near or at the surface. The individual is assumed to spend 12 h/d outdoors on the site, during which he is exposed to direct penetrating radiation from the soil. The individual is also assumed to inhale resuspended contamination in the surface soil for 12 h/d during his 50 years of exposure, with an assumed air concentration calculated using a time-dependent resuspension factor to account for the environmental "aging" of radionuclides. This relationship is given as (Anspaugh et al. 1975):

$$S_f = (10^{-4}\ e^{-\lambda\sqrt{t}}) + 10^{-9} \qquad (4.3)$$

where S_f • resuspension factor m^{-1}

10^{-4} • resuspension factor at time t = 0, m^{-1}

λ • effective decay constant controlling the availability of material for resuspension, 0.15 $day^{-1/2}$

t • time after deposition, days

10^{-9} • resuspension factor after 17 years, m^{-1}.

Finally, the individual is assumed to grow 50% of his fruit and vegetable diet in a backyard home garden located in the contaminated soil.

5.0 ALLOWABLE RESIDUAL CONTAMINATION LEVEL CALCULATIONS

The step-by-step procedure for calculating Allowable Residual Contamination Levels (ARCL) for the 115-F and 117-F facilities is outlined in this section. After a brief description of the dose models for assessing exposures by various pathways, ARCL maximum organ dose conversion factors are described for a set of radionuclides of potential interest during decommissioning. Scenario-specific ARCL dose factors for the exposure scenarios considered in this study (Section 4.0) are next developed. Finally, a specific application is made for a mixture of radionuclides representative of those found in the 115-F and 117-F facilities. The procedure described is intended to be flexible enough to permit consideration of alternative mixtures and concentrations of radionuclides, should they be encountered during actual decommissioning operations.

5.1 DOSE MODELS FOR RADIATION EXPOSURE PATHWAYS

The method for calculating ARCL values for the 115-F and 117-F facilities relies on an analysis of maximum annual radiation doses resulting from the limiting radiation exposure scenarios. For short-term exposures, such as those an individual would receive during the intruder-explorer or intruder-discovery scenarios, the maximum annual dose occurs during the year in which the exposure occurs. Dose factors for short-term direct ingestion of surface contamination transferred to the hands are calculated using the ARRRG computer program (Napier et al. 1980). For short-term inhalation, dose factors are obtained using the DACRIN computer program (Houston, Strenge, and Watson 1976). The DACRIN computer program is based on the Task Group on Lung Dynamics Model (TGLM) (ICRP 1966). For this study, a particle size of 1 m activity-median aerodynamic diameter (AMAD) is assumed. This particle size is within the respirable size distribution and is a "standard" assumption when detailed information on the particle size distribution is not available. To account for the solubility of radionuclides in the blood stream, soluble classifications (either Class D or W material) are used for all internal organs except for lung and G.I. tract (lower large intestine), where an insoluble (Class W or Y)

classification is assumed. These assumptions tend to maximize the dose to specific internal organs obtained from the TGLM equations and are rather "standard" for situations where the exact chemical properties of radionuclides are not known. External exposures are calculated using the BWR room model (Oak et al. 1980) and dose factors from the ISOSHLD (Engel et al. 1966; Simmons et al. 1967) computer program (also see Section 4.1).

For long-term (or continuous) exposure during the unrestricted use scenarios the maximum annual dose to internal organs may not occur in the first year. This is because specific radionuclides may accumulate in internal organs as a function of their rate of intake and their physical and biological half-lives. The PNL computer program MAXI (Napier et al. 1979; Murphy and Holter 1980) is used in this study to calculate maximum annual doses from continuous exposures. The MAXI program uses dose factors from DACRIN (Houston, Strenge, and Watson 1976) for inhalation, and the FOOD and ARRRG computer programs (Napier et al. 1980) for ingestion of food products. Further discussions of the mathematical models used in the MAXI computer program are given in documents by Kennedy et al. (1979), Murphy and Holter (1980), and Napier (1982).

5.2 ALLOWABLE RESIDUAL CONTAMINATION LEVEL MAXIMUM ORGAN DOSE CONVERSION FACTORS

By applying the exposure conditions defined in Section 4.0 for the radiation exposure scenarios assigned to each mode of future use, and using the dose models previously discussed, maximum organ dose conversion factors for determining ARCL values are calculated. ARCL dose conversion factors are shown in Table 5.2.1 for specific radiation exposure pathways for radionuclides of potential interest during decommissioning. The dose factors are in units of rem/hr per Ci/m^2 for: 1) direct exposure (either in a contaminated room or during resource-recycle operations), 2) inhalation (from resuspension or cutting operations), and 3) direct ingestion of contamination transferred to the hands. Inhalation and ingestion dose factors are calculated based on the conservative assumption that 100% of each radionuclide is in the form of removable surface contamination.

TABLE 5.2.1. Allowable Residual Contamination Level Maximum Organ Dose Conversion Factors

Radionuclide	Facility: Direct Exposure (rem/h per Ci/m^2)	Inhalation From Resuspension (rem/h per Ci/m^2)(a)	Inhalation From Cutting (rem/h per Ci/m^2)(a)	Ingestion From Hands (rem/h per Ci/m^2)(a)	Resource-Recycle Direct Exposure (rem/yr per Ci/m^2)	Residential/ Home-Garden (rem/yr per pCi/g)
^{3}H	-(b)	1.0E-2(c)	1.2E-2	6.0E-3	-	1.7E-10
^{14}C	-	2.4E-1	2.8E-1	2.8E-1	3.1E-4	8.3E-8
^{57}Co	1.4E+0	1.2E+1	1.4E+1	4.4E-1	2.7E+1	2.3E-7
^{60}Co	2.7E+1	2.0E+2	2.3E+2	4.4E+0	4.2E+2	1.1E-2
^{55}Fe	-	2.4E+0	2.9E+0	1.2E-1	7.1E-3	1.0E-7
^{59}Fe	1.3E+1	2.5E+1	3.0E+1	3.8E+0	1.5E+2	1.9E-5
^{59}Ni	-	2.2E+0	2.5E+0	3.7E+0	1.4E-2	4.3E-5
^{63}Ni	-	8.5E+0	1.0E+1	3.6E+0	3.8E-2	5.2E-4
^{90}Sr+D(d)	1.1E-1	3.7E+2	4.4E+2	3.2E+1	4.0E+0	1.1E-1
^{99}Mo	4.9E-2	1.4E+1	1.6E+1	1.4E-1	2.7E+1	6.0E-6
^{99}Tc	-	2.7E+1	3.1E+1	6.6E-1	3.3E-3	3.9E-4
^{124}Sb	2.1E+1	8.3E+1	9.6E+1	8.7E+0	2.7E+2	2.7E-5
^{125}Sb+D	9.0E-1	5.6E+1	6.5E+1	2.2E+0	6.7E+1	1.7E-3
^{134}Cs	1.9E+1	2.8E+1	3.3E+1	8.8E+0	2.4E+2	5.7E-3
^{137}Cs	-	3.9E+0	4.5E+0	1.2E+0	1.3E-1	9.0E-6
^{137}Cs+D	8.9E+0	5.5E+0	6.5E+0	6.5E+0	1.0E+2	2.6E-3
^{144}Ce+D	5.1E-1	2.6E+2	3.0E+2	9.8E+0	8.7E+0	1.3E-5
^{152}Eu	1.6E+1	9.0E+1	1.1E+2	2.8E+0	1.8E+2	5.0E-3
^{154}Eu	1.6E+1	1.6E+2	1.8E+2	6.0E+0	1.9E+2	5.4E-3
^{234}U+D	2.8E+0	2.3E+4	2.8E+4	4.6E+1	2.0E+1	4.7E-4
^{236}U+D	7.4E-1	2.2E+4	2.6E+4	4.4E+1	1.2E+1	4.4E-4
^{237}Np+D	2.2E+0	2.4E+4	3.0E+4	1.3E+1	1.5E+3	7.3E-4
^{238}Pu	2.8E-3	2.8E+4	3.4E+4	8.0E+0	9.3E+2	6.1E-5
^{239}Pu	1.7E-3	2.6E+4	3.2E+4	7.5E+0	1.0E+3	8.8E-5
^{241}Am	2.2E+0	2.6E+4	2.6E+4	7.8E+0	9.9E+2	1.5E-4

(a) Assuming that all surface contamination is removable, and not fixed.
(b) A dash indicates no dose factors result.
(c) Where 1.0E-2 = 1.0 x 10^{-2}.
(d) +D means plus short-lived daughter products.

Modifications can be made to these factors to account for fixed surface contamination. For the resource-recycle scenario, the dose factors are mrem/yr per Ci/m^2 of contaminated surface, adjusted to a recycle rate of 200 MT/yr as described in Section 4.3.2. The resource-recycle dose factors are calculated for the entire year and include both external and inhalation exposure. For unconfined surface soil areas during unrestricted use, the

units of these dose factors are given as rem/yr per pCi/g of soil, and are directly calculated using the scenario-specific assumptions discussed in Section 4.3.3.

The dose factors listed in Table 5.2.1 are the largest organ dose for each radionuclide and exposure pathway. The organs considered in the calculations are: total body, bone, lung, and G.I. tract (lower large intestine). The dose factors in Table 5.2.1 are used to calculate the scenario-specific ARCL dose factors shown in Table 5.2.2. These factors are given in units of total rem per Ci/m^2 of surface contamination, or rem/yr per pCi/g of soil. They are generally calculated by multiplying the ARCL dose conversion factors in Table 5.2.1 by the hours of exposure for each scenario and summing over the pathways considered. For example, the restricted use factors in Table 5.2.2 are based on 8 h of exposure as defined by the intruder-explorer scenario. To obtain the factors in Table 5.2.2 for the intruder-explorer, sum the ARCL dose conversion factors in Table 5.2.1 (by radionuclide) for facility direct exposure, inhalation from resuspension, and ingestion from hands; then multiply the sum by eight (reflecting 8 h of uniform exposure). The same procedure is followed for the resource-salvage scenario, for a 2000-hour period, where the resource-recycle values are added directly. For the residential/home-garden scenario, maximum annual doses are calculated directly using the scenario-specific data, so no modification is required. Thus, the residential/home-garden conversion factors are directly reported in Table 5.2.2 as unconfined soil factors.

5.3 ALLOWABLE RESIDUAL CONTAMINATION LEVEL APPLICATIONS TO THE 115-F AND 117-F FACILITIES

The scenario-specific ARCL dose factors calculated in the previous section are next applied to the representative radionuclide inventory for the 115-F and 177-F facilities (discussed in Section 3.0). The representative inventory is used to give our best current determination of ARCL values based on existing site characterization data. However, we also recognize that as decommissioning operations are conducted better

TABLE 5.2.2. Scenario-Specific ARCL Dose Factors[a]

			UNRESTRICTED USE:	
	Column 1	Column 2	Column 3	Column 4
Radionuclide	Restricted Use (Total rem per Ci/m^2)[b]	Controlled Use: (Total rem per Ci/m^2)[d]	Composite Surface Contamination (Total rem/yr per Ci/m^2)[d]	Unconfined Soil 0 to 1 m Deep (Total rem/yr per pCi/g)[e]
^{3}H	1.3E-1[f]	3.2E-1	3.7E+1	1.7E-10
^{14}C	4.2E+0	1.0E+1	1.2E+3	8.3E-8
^{57}Co	1.3E+2	3.2E+2	3.3E+4	2.2E-7
^{60}Co	1.8E+3	4.5E+3	5.6E+5	1.1E-2
^{55}Fe	2.0E+1	5.0E+1	6.2E+3	1.0E-7
^{59}Fe	3.3E+2	8.4E+2	9.6E+4	1.9E-5
^{59}Ni	3.0E+1	7.4E+1	1.3E+4	4.3E-5
^{63}Ni	9.7E+1	2.4E+2	2.8E+4	5.2E-4
^{90}Sr+D[g]	3.2E+3	8.0E+4	9.8E+5	1.1E-1
^{93}Mo	1.1E+2	2.8E+2	3.5E+4	6.0E-6
^{99}Tc	7.4E+0	1.9E+1	6.8E+4	3.9E-4
^{124}Sb	9.0E+2	2.2E+3	2.6E+5	2.7E-5
^{125}Sb+D	4.7E+2	1.2E+3	1.4E+5	1.7E-3
^{134}Cs	4.5E+2	1.1E+3	1.2E+5	5.7E-3
^{135}Cs	4.1E+1	1.0E+2	1.2E+4	9.0E-6
^{137}Cs+D	1.7E+2	4.2E+2	4.4E+4	2.6E-3
^{144}Ce	2.2E+3	5.4E+3	6.6E+5	1.3E-5
^{152}Eu	8.7E+2	2.2E+3	2.6E+5	5.0E-3
^{154}Eu	1.5E+3	3.9E+3	4.4E+5	5.4E-3
^{235}U+D	1.8E+5	4.6E+5	5.7E+7	4.7E-4
^{238}U+D	1.8E+5	4.4E+5	5.4E+7	4.4E-4
^{237}Np+D	1.9E+5	4.8E+5	6.0E+7	7.3E-4
^{239}Pu	2.2E+5	5.6E+5	7.0E+7	6.1E-5
^{240}Pu	2.1E+5	5.2E+5	6.5E+7	8.8E-5
^{241}Am	2.8E+5	7.1E+5	8.7E+7	1.5E-4

(a) Based on 1 Ci/m^2 of removable surface contamination in the facilities, and 1 pCi/g of soil for unconfined soil areas.
(b) Based on eight hours of exposure in the intruder-explorer scenario (see Section 4.0).
(c) Based on 20 hours of exposure in the intruder-discovery scenario (see Section 4.0).
(d) Based on 2000 hours of exposure in the resource-salvage scenario (see Section 4.0).
(e) As reported for the residential/home-garden scenario in Table 5.2.1.
(f) +D means plus short-lived daughter products.
(g) Where 1.3E-1 = 1.3 x 10^{-1}.

characterization data will be generated. These data, and data from the post-decommissioning survey, should be used to determine the final ARCL values for the facilities. Thus, we have designed the ARCL methods in this report to easily accommodate changes in radionuclide mixtures and concentrations.

Scenario-specific ARCL doses are next calculated by multiplying the scenario-specific dose factors (listed in Table 5.2.2) by the relative activities of the radionuclides in the representative inventory (listed in Table 3.2.3). The results are shown in Appendix A in Table A.1 for restricted and controlled use, and in Table A.2 for unrestricted use after decay periods of 0, 100, and 300 years. Scenario-specific doses are calculated for the restricted and controlled use modes assuming that only non-combustible and non-hazardous solid radioactive wastes are left in a safe-storage facility. This facility is assumed to provide effective barriers to most types of intrusion and require very little maintenance, if any.

The scenario-specific doses in Appendix A are next corrected to the allowable organ dose limit by:

$$P_i = \frac{DO}{ARCL_i} (\Pi_j M_j) \qquad (5.1)$$

where P_i • the total ARCL for each radionuclide in the mixture, Ci/m^2 or pCi/g in soil

DO • example allowable organ dose limit of either 0.5 rem/yr on restricted and controlled use or 0.01 rem/yr for unrestricted use

$ARCL_i$ • the scenario-specific ARCL dose for each radionuclide, i, in the mixture, rem/yr

M_j • modification factors for confined soil areas. NOTE: $M_j = 1$ for surface contamination and unconfined soil calculations.

The ARCL values calculated for the 115-F and 117-F representative radionuclide inventory are shown in Table 5.3.1 for restricted and controlled use, and in Table 5.3.2 for unrestricted use. The ARCL values are reported in these tables in units of dpm/100 cm^2 for surface contamination and pCi/g for soil contamination.

A description of how to modify the ARCL values to accommodate changes in the radionuclide mixture or annual dose limit is given in Appendix B. Appendix B also contains a worksheet for performing the

calculations and includes two example problems. To determine the effect of radioactive decay on the ARCL value calculated for a mixture, a radioactive decay correction should be applied to the source inventory. This correction is outlined in a separate worksheet in Appendix B. Finally, the ARCL values given in this report (or obtained using the ARCL worksheets in Appendix B) can be translated into instrument readings using the instrument response worksheet shown in Appendix B. An example of this worksheet is given for a smear sample detection system with a known calibration curve.

TABLE 5.3.1. Allowable Residual Contamination Level Values Calculated for the 115-F and 117-F Radionuclide Inventory - Restricted and Controlled Use

Radionuclide	Restricted Use[a] (dpm/100 cm^2)	Controlled Use[a] (dpm/100 cm^2)
^{3}H	3.1E+6[b]	1.2E+6
^{14}C	1.5E+8	5.9E+7
^{60}Co	1.5E+6	5.9E+5
^{90}Sr+D[c]	1.3E+5	5.3E+4
^{137}Cs+D	5.9E+5	2.4E+5
^{152}Eu	4.0E+6	1.6E+6
^{154}Eu	1.5E+6	5.9E+5
^{239}Pu	6.4E+8	1.6E+3
TOTALS	1.6E+8	6.4E+7

(a) Assuming that all of the surface contamination is removable, and none is fixed.
(b) Where 3.1E+6 = 3.1 x 10^6.
(c) +D means plus short-lived daughter products.

TABLE 5.3.2. Allowable Residual Contamination Level Values Calculated for the 115-F and 117-F Radionuclide Inventory - Unrestricted Use

	UNRESTRICTED USE AT T = 0		UNRESTRICTED USE AT T = 100		UNRESTRICTED USE AT T = 300	
Radionuclide	Surface Contamination (dpm/100 cm^2)	Unconfined Soil (pCi/g)	Surface Contamination (dpm/100 cm^2)	Unconfined Soil (pCi/g)	Surface Contamination (dpm/100 cm^2)	Unconfined Soil (pCi/g)
^{3}H	2.1E+2(a)	5.1E-1	4.6E+0	8.7E-2	8.4E-5	1.0E-4
^{14}C	1.0E+4	2.5E+1	5.3E+4	1.0E+3	5.3E+4	6.4E+4
^{60}Co	1.0E+2	2.5E-1	8.6E-4	1.6E-5	-(b)	-
^{90}Sr+D(c)	9.2E+0	2.2E-2	3.7E-2	7.3E-2	2.4E-2	3.1E-2
^{137}Cs+D	4.0E+1	1.0E-1	2.1E+1	4.1E-1	2.2E-1	2.6E-1
^{152}Eu	2.6E+2	6.5E-1	8.6E+0	1.6E-1	3.1E-4	3.7E-4
^{154}Eu	1.0E+2	1.5E-1	1.5E-1	2.9E-3	-	-
^{239}Pu	4.4E-1	1.1E-3	2.2E+0	4.4E-2	2.4E+0	2.9E+0
TOTALS	1.1E+4	2.7E+1	5.3E+4	1.1E+3	5.3E+4	7.1E+4

(a) Where 2.1E+2 = 2.1 x 10^2.
(b) +D means plus short-lived daughter products.
(c) A dash indicates a value less than 10^{-5}.

6.0 DISCUSSION OF RESULTS

The Allowable Residual Contamination Levels (ARCL) reported in this document for the 115-F and 117-F facilities at the Hanford Site are based on a scenario/exposure-pathway analysis and compliance with an annual dose limit. ARCL values are presented for three modes of future use of the land and facilities. The modes are restricted use, controlled use, and unrestricted use. Information on restricted and controlled use is included to provide engineers with a broad data base for considering decommissioning alternatives. This data base should help engineers conduct a full decommissioning safety and cost analysis for the Hanford production reactors and facilities.

Procedures for modifying the ARCL values to accommodate changes in radionuclide mixtures or annual dose limits are fully described in Appendix B. We have based our calculations on example annual dose limits of 500 mrem/yr for restricted and controlled use, and 10 mrem/yr for unrestricted use since there are presently no DOE guidelines for acceptable dose limits specific to decommissioning. The example annual dose limits are used to help demonstrate the ARCL method only.

In this section, further modifications to the basic ARCL values and the modeling assumptions are described, along with a comparison of the ARCL values to existing NRC guidelines for decommissioning (U.S. AEC 1974). This section also contains a discussion of our overall conclusions.

6.1 SURFACE CONTAMINATION ASSUMPTIONS

The ARCL values, presented for the representative 115-F and 117-F radionuclide mixture, are based on removable contamination only. This assumption was made to account for the uncertainties associated with the behavior of "fixed" contamination over long time periods. However, if it can be shown that part of the surface contamination will remain fixed, the resultant ARCL values will increase since less material will be available for resuspension or transfer to the hands for direct ingestion. As an example, we repeated part of the analysis presented in Section 5.0 using

the representative mixture of radionuclides for the restricted-use mode assuming that only 10% of the contamination was removable, with 90% fixed. The results showed an ARCL value of 4.0×10^{-2} Ci/m^2 compared to 7.0×10^{-3} Ci/m^2 reported in Section 5.0.

The unrestricted release calculations for the facilities were based on the resource-salvage scenario. In this scenario, we assumed that both the surfaces of the facility and the internal surfaces of piping and equipment had the same contamination level. This may be unreasonable if decontamination of the inside surfaces of piping and equipment proves to be difficult or ineffective. Modifications to the basic calculation can be made to account for higher internal surface contamination levels by increasing the air concentration that results from cutting operations. As an example, we repeated the calculation assuming that the inside surfaces of piping and equipment were ten times more contaminated than building surfaces at T = 0. The impact of this change is to increase the air concentration resulting from cutting operations by a factor of ten. This will reduce the calculated ARCL value by about a factor of 3.

6.2 MODELING ASSUMPTIONS

Several key assumptions were made in the calculation of the scenario-specific ARCL dose conversion factors. These assumptions included:

- the particle size distribution of airborne radionuclides
- the air concentrations resulting from resuspension and cutting operations
- the solubility of inhaled radionuclides in the bloodstream
- the uniform distribution of soil contamination in the top meter of soil
- the chemical availability of the radionuclides in the soil permitting root uptake
- the exposure durations and diet of the exposed individual
- the quantity of material assumed to be salvaged in the resource-salvage scenarios

- the root uptake model assumed for ^{14}C.

We have attempted to be consistent in making these assumptions by using either Hanford-specific data (where available) or "standard" values used in previous modeling assessments.

Perhaps the modeling assumption with the largest potential impact on the results is the root uptake factor assumption used for ^{14}C. Current models for ^{14}C are focused on the equilibrium incorporation of CO_2 gas into growing plant materials. Because the ^{14}C of concern in this analysis is in a solid graphite form, we felt that the simple equilibrium model was not adequate for potential soil contamination. We, therefore, applied a standard root uptake model, as described in the FOOD computer program (Napier et al. 1980), with an assumed root uptake factor of 2.5×10^{-4}. This approach recognizes the long-term potential for an increased availability of the ^{14}C from the solid graphite form.

6.3 COMPARISONS WITH REGULATORY GUIDE 1.86

The U.S. Nuclear Regulatory Commission (NRC) has provided guidance for the termination of licenses for nuclear reactors in Regulatory Guide 1.86 (U.S. AEC 1974). We conducted a comparison of the ARCL values for specific radionuclides with the values reported for removable contamination in Table I of Regulatory Guide 1.86. The results of this comparison are shown in Table 6.3.1. For ^{137}Cs, we calculate an ARCL value for removable surface contamination of about 5000 dpm/100 cm^2, which is a factor of five greater than the value reported by the NRC (1000 dpm/100 cm^2). For ^{60}Co, our ARCL value is a factor of 2.5 lower than the NRC value, and for ^{90}Sr our value equals the NRC value. The major differences are for ^{14}C and $^{238}U+D$. Our value for ^{14}C is 180,000 dpm/100 cm^2, which is much higher than the 5000 dpm/100 cm^2 reported by the NRC. Our value for $^{238}U+D$ is only 4 dpm/100 cm^2, which is much lower than the 1000 dpm/100 cm^2 reported by the NRC.

This comparison shows good agreement between Regulatory Guide 1.86 and our ARCL values for unrestricted release. The major difference is that we have calculated the ARCL values based on an example annual dose limit of

10 mrem/yr for each radionuclide, and Regulatory Guide 1.86 only reported four administrative limits for broad groups of radionuclides.

6.4 CONCLUSIONS

A major consideration in developing decommissioning plans for the Hanford production reactors is the amount (or level) of radioactive contamination that can be allowed to remain at the site. This report contains a description of the methods for determining Allowable Residual Contamination Levels (ARCL) for the radionuclides remaining at the 115-F and 117-F facilities. ARCL values are reported for a representative mixture of radionuclides and are based on a scenario/exposure pathway analysis and

TABLE 6.3.1. Comparison of Unrestricted-Use Levels for Removable Surface Contamination

Radionuclide	Reg. Guide 1.86[a] (dpm/100 cm^2)	115-F and 117-F ARCL[b] (dpm/100 cm^2)
^{137}Cs+D[c]	1,000	5,000
^{60}Co	1,000	400
^{90}Sr+D	200	200
^{14}C	5,000	180,000
^{60}Co	1,000	400
^{63}Ni	5,000	800
^{90}Sr+D[d]	200	200
^{138}Cs+D	1,000	5,000
^{238}U+D	1,000	4
^{239}Pu	20	3

(a) Based on values from Table 1 of U.S. AEC (1974).
(b) Based on the scenario-specific ARCL doses for unrestricted use (at t = 0) reported in Table 5.2.2, and an annual dose limit of 10 mrem/yr.
(c) +D means plus short-lived daughter products.

compliance with an annual dose limit. These ARCL values show good agreement with the removable contamination levels reported by the NRC in Regulatory Guide 1.86 (U.S. AEC 1974). The data presented in this report can be modified by the reader to consider different mixtures of radionuclides at various concentrations (using the worksheets in Appendix B), while maintaining site-specific exposure conditions. Further flexibility is included that will permit an engineering consideration of alternatives to unrestricted use (i.e., restricted or controlled use). The ARCL values calculated in this report (or as modified by additional site-specific data) can be translated into instrument responses (using the worksheet discussed in Appendix B) and included as part of the overall Health Physics program for certifying release of the 115-F and 117-F facilities after decommissioning.

7.0 REFERENCES

Anspaugh, L. R., J. H. Shinn, P. L. Phelps and N. C. Kennedy. 1975. "Resuspension and Redistribution of Plutonium in Soils." Health Phys. 29:571-582.

Code of Federal Regulations. Title 10, Part 20, "Standards for Protection Against Radiation."

Code of Federal Regulations. Title 40, Part 190, "Environmental Protection Standards for Nuclear Power Operations."

Code of Federal Regulations. Title 40, 192, "Environmental Protection Standards for Uranium Mill Tailings."

Dorian, J. J., and V. R. Richards. 1978. Radiological Characterization of the Retired 100 Areas. UNI-946, Prepared for the U.S. Department of Energy by United Nuclear Industries, Inc. (UNI). Richland, Washington.

Dunster, H. J. 1962. Maximum Permissible Levels of Skin Contamination. AHSB(RP)R28, United Kingdom Atomic Energy Authority, Authority Health and Safety Branch Report, Harwell, Didcot, Berkshire.

Eckerman, K. F. and M. W. Young. 1980. A Methodology for Calculating Residual Radioactivity Levels Following Decommissioning. NUREG-0707, U.S. Nuclear Regulatory Commission, Washington, D.C.

Engel, R. L., J. Greenborg, and M. M. Hendrickson. 1966. ISOSHLD - A Computer Code for General Purpose Isotope Shielding Analysis. BNWL-236, Pacific Northwest Laboratory, Richland, Washington.

Federal Register, Vol. 46, No. 27. 11666-68(February 10, 1981). "Nuclear Regulatory Commission, 10CFR Parts 30, 40, 50, 70 and 72, Decommissioning Criteria for Nuclear Facilities; Notice of Availability of Draft Environmental Impact Statement."

Federal Register, Vol. 48, No. 3. 590-606(January 5, 1983). "Environmental Protection Agency, 40 CFR Part 192, Standards for Remedial Actions at Inactive Uranium Proecssing Sites - Final Rule."

Gibson, J. A. B., and A. D. Wrixon. 1979. "Methods for the Calculation of Derived Working Limits for Surface Contamination by Low-Toxicity Radionuclides." Health Physics 36(3):311-321.

Hanford Atomic Products Operation Staff. 1963. Hazards Summary Report. Vol. 3, p. 105. Richland, Washington.

Harmon, K. M., and J. C. King. 1975. Resource Book - Decommissioning of Contaminated Facilities at Hanford. PNL-MA-588, Pacific Northwest Laboratory, Richland, Washington.

Healy, J. W. 1971. Surface Contamination: Decision Levels. LA-4558-MS, Los Alamos Scientific Laboratory, Los Alamos, New Mexico.

Healy, J. W. 1974. A Proposed Interim Standard for Plutonium in Soils. LA-5483-MS, Los Alamos Scientific Laboratory, Los Alamos, New Mexico.

Healy, J. W., J. C. Rodgers and C. L. Wienke. 1979. Interim Soil Limits for D&D Projects. LA-UR-79-1865-Rev., Los Alamos Scientific Laboratory, Los Alamos, New Mexico.

Houston, J. R., D. L. Strenge, and E. C. Watson. 1976. DACRIN - A Computer Program for Calculating Organ Doses from Acute or Chronic Radionuclide Inhalation. BNWL-B-389, Pacific Northwest Laboratory, Richland, Washington.

International Commission on Radiological Protection (ICRP). 1966. "Deposition and Retention Models for Internal Dosimetry of the Human Respiratory Tract." Health Phys. 12:173-207.

Kennedy, W. E., Jr., E. C. Watson, G. R. Hoenes, and B. A. Napier. 1979. "A Method for Determining Acceptable Residual Radioactive Contamination Levels." Paper presented at the 24th Annual Meeting of the Health Physics Society, July 8-13, 1979, Philadelphia, Pennsylvania.

Kennedy, W. E., Jr., E. C. Watson, D. W. Murphy, B. J. Harrer, R. Harty and J. M. Aldrich. 1981. A Review of Removable Surface Contamination on Radioactive Materials Transportation Containers. NUREG/CR-1858, (PNL-3666) Richland, Washington.

Kennedy, W. E., Jr., R. L. Aaberg, B. A. Napier, and J. K. Soldat. 1982. Transuranic Advanced Disposal Systems: Preliminary Pu Waste Disposal Criteria for Hanford. PNL-4254, Pacific Northwest Laboratory, Richland, Washington.

Konzek, G. J., J. D. Ludwick, W. E. Kennedy, Jr., and R. I. Smith. 1981. Technology, Safety and Costs of Decommissioning Reference Nuclear Research and Test Reactors. NUREG/CR-1756, prepared for the U.S. Nuclear Regulatory Commission by Pacific Northwest Laboratory, Richland, Washington.

Mueller, M. A., W. E. Kennedy, Jr., and J. K. Soldat. 1981. Review of Soil Contamination Guidance. PNL-3866, Pacific Northwest Laboratory, Richland, Washington.

Murphy, E. S., and G. M. Holter. 1980. Technology, Safety and Costs of Decommissioning a Reference Low-Level Waste Burial Ground. NUREG/CR-0570, Vols. 1 and 2, report prepared for the Nuclear Regulatory Commission by Pacific Northwest Laboratory, Richland, Washington.

Napier, B. A., G. R. Hoenes, W. E. Kennedy, Jr., and E. C. Watson. 1979. "The Maximum Annual Dose Resulting from Residual Radioactive Contamination." Paper presented at the 24th Annual Meeting of the Health Physics Society, July 8-13, 1979, Philadelphia, Pennsylvania. Pacific Northwest Laboratory, Richland, Washington.

Napier, B. A., R. L. Roswell, W. E. Kennedy, Jr., and D. L. Strenge. 1980. ARRRG and FOOD - Computer Programs for Calculating Radiation Dose to Man from Radionuclides in the Environment. PNL-3180, Pacific Northwest Laboratory, Richland, Washington.

Napier, B. A. 1982. A Method for Determining "Allowable Residual Comtamination Levels" of Radionuclide Mixtures in Soil. PNL-3852, Pacific Northwest Laboratory, Richland, Washington.

Oak, H. D., G. M. Holter, W. E. Kennedy, Jr., and G. J. Konzek. 1980. Technology, Safety and Costs of Decommissioning a Reference Boiling-Water Reactor Power Station. NUREG/CR-0672, Vol. 1 and 2, prepared for the U.S. Nuclear Regulatory Commission by Pacific Northwest Laboratory, Richland, Washington.

O'Donnell, F. R., S. J. Cotter, D. C. Kocher, E. L. Etnier, and A. P. Watson. 1975. Potential Radiation Dose to Man From Recycle of Metals Reclaimed From a Decommissioned Nuclear Power Plant. NUREG/CR-0134, Prepared for the U.S. Nuclear Regulatory Commission by Oak Ridge National Laboratory, Oak Ridge, Tennessee.

Schneider, J. K. and C. E. Jenkins. Technology, Safety, and Costs of Decommissioning a Reference Nuclear Fuel Reprocesing Plant. NUREG-0278, Prepared for the U.S. Nuclear Regulatory Commission by Pacific Northwest Laboratory, Richland, Wasington.

Smith, R. I., G. J. Konzek and W. E. Kennedy, Jr. 1978. Technology, Safety, and Costs of Decommissioning a Reference Pressurized Water Reactor Power Station. NUREG/CR-0130, Vol. 1 and 2, prepared for the U.S. Nuclear Regulatory Commission by Pacific Northwest Laboratory, Richland, Washington.

Simmons, G. L. et al. 1967. ISOSHLD II Code Revision to Include Calculation of Dose Rates from Shielded Bremstrahlung Sources. BNWL-236, Supplement 1, Pacific Northwest Laboratory, Richland, Washington.

U.S. Atomic Energy Commission. 1974. Termination of Operating Licenses for Nuclear Reactors. Regulatory Guide 1.86, Directorate of Regulatory Standards, Washington, D.C.

U.S. Department of Energy. 1980. Environmental Assessment, F Area Decommissioning Program, Hanford Site, Richland, Benton County, Washington. DOE/EA-0120. Prepared by UNC Nuclear Industries. Richland, Washington.

U.S. Nuclear Regulatory Commission. 1976. Guidelines for Decontamination of Facilities and Equipment Prior to Release for Unrestricted Use or Termination of Licenses for By-Product, Source, or Special Nuclear Material. Washington, D.C.

U.S. Nuclear Regulatory Commission. 1980. Draft Environmental Impact Statement Concerning Proposed Rulemaking Exemption from Licensing Requirements for Smelted Alloys Containing Residual Technetium-99 and Low-Enriched Uranium. NUREG-0512, Washington, D.C.

U.S. Nuclear Regulatory Commission. 1981. Draft Environmental Impact Statement on 10 CFR Part 61, "Licensing Requirements for Land Disposal of Radioactive Waste." NUREG-0782, Vols. 1-4, Washington, D.C.

U.S. Nuclear Regulatory Commission. 1982. Final Environmental Impact Statement on 10 CFR Part 61 "Licensing Requirements for Land Disposal of Radioactive Waste." NUREG-0945, Washington, D.C.

APPENDIX A

SCENARIO-SPECIFIC DOSES FOR THE 115-F AND 117-F FACILITIES

9 1 1 2 2 1 2 0 2 1 4

APPENDIX A

SCENARIO-SPECIFIC DOSES FOR THE 115-F AND 117-F FACILITIES

This appendix contains the scenario-specific doses calculated for the 115-F and 117-F representative radionuclide inventory. This inventory is discussed in Section 3.2 and shown in Table 3.2.3. Table A.1 contains the scenario-specific doses calculated for restricted and controlled use. They are based on the intruder-explorer and intruder-discovery scenario. Table A.2 contains the scenario-specific doses calculated for unrestricted use. The surface contamination doses are for the most restrictive of the resource-recovery and resource-recycle scenarios. Finally, the unconfined soil doses are based on the residential/home-garden scenario.

TABLE A.1. Scenario-Specific Allowable Residual Contamination Level Doses for the 115-F and 117-F Facilities - Restricted and Controlled Use

Radionuclide	Restricted Use[a] (rem)	Controlled Use[b] (rem)
^{3}H	2.5E-3[c]	6.1E-3
^{14}C	3.9E+0	9.3E+0
^{60}Co	1.8E+1	4.2E+1
^{90}Sr+D[d]	2.7E+0	6.6E+0
^{137}Cs+D	6.3E-1	1.6E+0
^{152}Eu	2.1E+1	5.3E+1
^{154}Eu	1.4E+1	3.5E+1
^{239}Pu	8.4E+0	2.1E+1
TOTAL	6.8E+1	1.7E+2

(a) Based on the intruder-explorer scenario dose factors for restricted use listed in Table 5.2.2, and the relative concentrations of the radionuclides shown in Table 5.3.1 for T = 0.

(b) Based on the intruder-discovery scenario dose factors for contolled use listed in Table 5.2.2, and the relative concentrations of the radionuclides shown in Table 5.3.1 for T = 0.

(c) Where 2.5E-3 = 2.5×10^{-3}.

(d) +D means plus short-lived daughter products.

TABLE A.2. Scenario-Specific Allowable Residual Contamination Level Doses for the 115-F and 117-F Facilities - Unrestricted Use

Radionuclide	UNRESTRICTED USE AT T = 0		UNRESTRICTED USE AT T = 100		UNRESTRICTED USE AT T = 300	
	Surface Contamination (rem)	Unconfined Soil (rem)	Surface Contamination (rem)	Unconfined Soil (rem)	Surface Contamination (rem)	Unconfined Soil (rem)
^{3}H	7.0E-1[a]	3.2E-12	2.9E-3	1.3E-14	5.2E-8	2.4E-19
^{14}C	1.1E+3	7.7E-8	1.1E+3	7.6E-8	1.1E+3	7.5E-8
^{60}Co	5.2E+3	1.0E-4	8.4E-3	1.7E-10	-	-
^{90}Sr+D[b]	8.1E+2	9.1E-5	6.5E+1	7.3E-6	4.2E-1	4.7E-8
^{137}Cs+D	1.6E+2	1.0E-5	1.6E+1	1.0E-6	1.6E-1	1.0E-8
^{152}Eu	6.2E+3	1.2E-4	1.5E+1	7.5E-7	5.2E-4	2.6E-11
^{154}Eu	4.0E+3	4.9E-5	1.1E+0	1.4E-8	1.4E-7	1.7E-15
^{239}Pu	2.6E+3	3.5E-9	2.6E+3	3.5E-9	2.6E+3	3.5E-9
TOTALS	2.0E+4	3.7E-4	3.8E+3	9.1E-6	3.7E+3	1.4E-7

(a) Where 7.0E-1 = 7.0×10^{-1}.
(b) +D means plus short-lived daughter products.

APPENDIX B

ALLOWABLE RESIDUAL CONTAMINATION LEVEL WORKSHEETS FOR THE 115-F AND 117-F FACILITIES

APPENDIX B

ALLOWABLE RESIDUAL CONTAMINATION LEVEL WORKSHEETS FOR THE 115-F and 117-F FACILITIES AT THE HANFORD SITE

The ARCL method permits the consideration of mixtures and concentrations of radionuclides different than the representative inventory considered in this report. Figure B.1 contains a worksheet that can be used to determine the ARCL resulting for any combination of the radionuclides shown in Table 5.2.2. The following instructions explain how to use the worksheet.

1. Case Name. Enter the name or the numerical designation of the case considered.

2. Preparer's Name. Enter the name of the person preparing the ARCL Worksheet.

3. Date. Enter the date on which the worksheet was completed.

4. Determination of ARCL Dose Factors to Enter from Table 5.2.2. The calculation requires the proper dose factors which are a function of both the use mode and the contamination condition. Check only one use mode and only one contamination condition to uniquely determine from the worksheet which column of Table 5.2.2 contains the proper factors.

   Use Mode Considered. Check the use mode considered (i.e., restricted, controlled, or unrestricted). Note that the annual dose limits considered are 0.5 rem/yr for restricted and controlled use, and 0.01 rem/yr for unrestricted use. If results for more than one use mode are desired, additional worksheets should be used.

   Contamination Conditions. Select either surface contamination (in Ci/m^2) or soil contamination (in pCi/g) calculations. Facility surface contamination calculations (Ci/m^2) require factors from Columns 1, 2, or 3 of Table 5.2.2, depending upon the use mode

1. Case Name:

2. Preparer's Name:

3. Date Prepared:

4. Determination of ARCL Dose Factors to Enter From Table 5.2.2. Check one Use Mode and one Contamination Condition.

Use Mode/Contamination Condition		Contaminated Surfaces Ci/m^2•dpm/100 cm^2		Surface Soil (pCi/g)	
Restricted Use @ 0.5 rem/yr		Column 1		Column 4	
Controlled Use @ 0.5 rem/yr		Column 2		Column 4	
Unrestricted Use @ 0.01 rem/yr		Column 3		Column 4	

5. Radionuclides Considered (List)	6. Radionuclide Concentrations (Available Units)	6a. Radionuclide* Concentrations (Ci/m^2 or pCi/g)	7. Scenario-Specific ARCL Dose Factors (Step 4; rem/yr per: [Ci/m^2 or pCi/g])	8. Product of Columns 6a & 7 (rem/yr)	9. ARCL - Product of Column 6a & Item 8b (Ci/m^2 or pCi/g)	10. Conversion to dpm/100 cm^2 Multiply Column 9 by 2.2×10^{10}

6b. Total: _____
*May be taken from Decay Correction Worksheet

8a. Total: _____
8b. Annual Dose Limit Divided by 8a.
(0.5 or 0.01/_____)
= _____ = 8b

9a. Total: _____
9b. Check:
9a. Divided by 6b.
(_____ ÷ _____)
= _____ = 8b?

10a. Total: _____

11. Present Gross Contamination Level Yielding Future ARCL of Item 9a: (Used only with Decay Correction Worksheet)
Product of Item 9a (or 10a) and Item 9 of Decay Correction Worksheet.
(9a or 10a) _____ x (9 of Figure B.4) _____ = _____ (Ci/m^2, PCi/g, or dpm/100 cm^2)

12. Additional Notes.

FIGURE B.1. Allowable Residual Contamination Level Worksheet for 115-F and 117-F Facilities at the Hanford Site

desired. Soil contamination calculations (pCi/g) require factors from Column 4 of Table 5.2.2. If results for more than one contamination condition are required, additional worksheets should be used.

5. Radionuclides Considered. Enter the radionuclides considered in the space provided. If additional space is required, use additional worksheets.

6. Radionuclide Concentrations. The calculation requires that the source inventory be given in units of Ci/m^2 for surfaces or pCi/g for soils. If the inventory is available in other units (such as dpm/100 cm^2), list it in worksheet Item 6 and convert to appropriate units in Item 6a. Total the results and enter in Item 6b. The inventory may be given in either relative or absolute amounts. To determine the effect of radioactive decay on the ARCL value calculated for a mixture, a radioactive-decay correction should be applied to the source inventory. This correction is outlined in a separate worksheet (Figure B.4). The resulting decayed inventory should then be entered in Item 6a of Figure B.1, with the total reported in Item 6b.

7. Scenario-Specific ARCL Dose Factors. Enter the values from the appropriate column of Table 5.2.2 (as determined in Step 4) in units of rem/yr per Ci/m^2 for surfaces or rem/yr per pCi/g for soils.

8. Product of Items 6a and 7. Multiply the concentration of each radionuclide listed in worksheet Item 6a by its corresponding scenario-specific ARCL dose factor from Item 7 and enter in units of rem/yr. Sum all radionuclides and enter the total as Item 8a. Next, divide the annual dose limit (either 0.5 or 0.01 rem/yr) by the total and enter the result as Item 8b. Note: A different dose limit may be substituted in this step if desired.

9. ARCL. Multiply the concentration of each radionuclide given in Item 6a by the correction factor of Item 8b and enter the corresponding ARCL values for each nuclide of the specific mixture in Item 9 in total mixture ARCL as Item 9a. The value calculated as Item 9a is the total gross activity that may be allowed to remain that

results in the desired dose limit. At this point, a convenient mathematical check may be made by dividing Item 9a by Item 6a; the result should be equal to Item 8b.

10. Conversion From Ci/m^2 to $dpm/100\ cm^2$. If facility surface contamination calculations are desired, the result is converted from Ci/m^2 by multiplying the ARCL values for each radionuclide (Item 9) by a constant (2.2×10^{10}). Enter the results in units of $dpm/100\ cm^2$ in Item 10. Note: This step should not be performed if soil contamination calculations are desired. A value corresponding to Item 9a may be calculated either as the sum of the values in Item 10 or a multiple of Item 9a and entered as Item 10a.

11. Optional Decay Time Correction. If the radionuclide concentrations used in Item 6 or 6a were taken from the Radioactive Decay Correction Worksheet (Figure B.4), then the result calculated as Item 9a (or 10a) of the ARCL Worksheet (Figure B.1) is the ARCL applicable to that future time. That is, it is the amount that may remain on the surface or in the soil at the future time of unrestricted release. To determine the present contamination level of the nuclide mixture that will result in the limiting dose at the future time, one additional step is necessary. Multiply the value of Item 9a (or 10a, if calculated) by the value of Item 9 of the Decay Correction Worksheet (Figure B.4).

12. Additional Notes. Add any additional comments or clarifications on the worksheet.

As examples of the use of the ARCL Worksheet, two example problems are described. Both rely on a radionuclide mixture composed of ^{14}C (50%), ^{63}Ni (5%), $^{90}Sr+D$ (5%), $^{137}Cs+D$ (10%), ^{152}Eu (15%), and ^{154}Eu (15%) by activity. The completed worksheet for the first example problem, unrestricted release of a facility with surface contamination, is shown in Figure B.2. The relative concentrations of the radionuclides are shown in worksheet Items 6 and 6a since an activity distribution is assumed. The total is reported in Item 6b in units of Ci/m^2. Scenario-specific ARCL dose factors for the radionuclides are obtained from Column 3 of

1. Case Name: EXAMPLE PROBLEM 1 - UNRESTRICTED RELEASE OF A FACILITY (SURFACE CONTAMINATION)

2. Preparer's Name: W. E. KENNEDY, JR.

3. Date Prepared: 6/23/83

4. Determination of ARCL Dose Factors to Enter From Table 5.2.2. Check one Use Mode and one Contamination Condition.

Use Mode/Contamination Condition		Contaminated Surfaces (Ci/m² • dpm/100 cm²)	✓	Surface Soil (pCi/g)	
Restricted Use @ 0.5 rem/yr		Column 1		Column 4	
Controlled Use @ 0.5 rem/yr		Column 2		Column 4	
Unrestricted Use @ 0.01 rem/yr	✓	Column 3	✓	Column 4	

5. Radionuclides Considered (List)	6. Radionuclide Concentrations (Available Units (fractions!))	6a. Radionuclide* Concentrations (Ci/m² ~~or~~ ~~pCi/g~~)	7. Scenario-Specific ARCL Dose Factors (Step 4; rem/yr per: [Ci/m² ~~or pCi/g~~])	8. Product of Columns 6a & 7 (rem/yr)	9. ARCL - Product of Column 6a & Item 8b (Ci/m² ~~or pCi/g~~)	10. Conversion to dpm/100 cm² Multiply Column 9 by 2.2 x 10¹⁰
^{14}C	0.50	0.50	1.2E+3	6.0E+2	3.1E-8	6.8E+2
^{63}Ni	0.05	0.05	2.8E+4	1.4E+3	3.1E-9	6.8E+1
$^{90}Sr+D$	0.05	0.05	9.8E+5	4.9E+4	3.1E-9	6.8E+1
$^{137}Cs+D$	0.10	0.10	4.4E+4	4.4E+3	6.2E-9	1.4E+2
^{152}Eu	0.15	0.15	2.6E+5	3.9E+4	9.4E-9	2.1E+2
^{154}Eu	0.15	0.15	4.4E+5	6.6E+4	9.4E-9	2.1E+2

6b. Total: 1.0
*May be taken from Decay Correction Worksheet

8a. Total: 1.6E+5
8b. Annual Dose Limit Divided by 8a.
(~~.05 or~~ 0.01/1.6E+5)
= 6.2E-8 = 8b

9a. Total: 6.2E-8
9b. Check:
9a. Divided by 6b.
(6.2E-8 ÷ 1.0)
= 6.2E-8 = 8b?
yes ✓

10a. Total: 1.4E+3

11. Present Gross Contamination Level Yielding Future ARCL of Item 9a: (Used only with Decay Correction Worksheet)
Product of Item 9a (or 10a) and Item 9 of Decay Correction Worksheet.
(9a or 10a) _____ x (9 of Figure B.4) _____ = _____ (Ci/m², PCi/g, or dpm/100 cm²)

12. Additional Notes.

FIGURE B.2. Allowable Residual Contamination Level Worksheet for 115-F and 117-F Facilities at the Hanford Site - Example Problem 1

Table 5.2.2, as indicated by Step 4 of the worksheet, and are entered as Item 7. The products of the entries in Items 6a and 7 are listed as Item 8, with a cumulative total dose of 1.6×10^5 rem/yr given as Item 8a. This is the dose that the potential resource-salvage individual could receive if the facility were left contaminated to the level of Item 6b, 1.0 Ci/m^2. The ratio of the unrestricted release annual dose limit (0.01 rem) to the total in Item 8a is given in Item 8b as 6.2×10^{-8}. This value, multiplied by the entries in Item 6a, results in the ARCL values sum to the ARCL for the mixture of 6.2×10^{-8} Ci/m^2. The mathematic check of Item 9b indicates that no errors were propagated into the example. Finally, because surface contamination calculations are being performed, the conversion of the result to units of dpm/100 cm^2 is reported as Item 10a. The radionuclide contributing the dominant portion of the dose, and thus controlling the total ARCL values, is ^{154}Eu as seen by the entries in Item 8 of Figure B.2.

The second sample problem considers the same radionuclides and concentrations as the first (now in pCi/g) for unrestricted use of unconfined soil as shown by Items 4-7 of Figure B.3. The scenario-specific ARCL dose factors for this problem are obtained from Column 4 of Table 5.2.2 and are entered in Item 7 of the worksheet. The products of the radionuclide concentrations and ARCL dose factors are reported in Item 8, with a total of 7.4×10^{-3} rem/yr shown in Item 8a. The ratio of the annual dose limit (0.01 rem) to Item 8a is shown in Item 8b as 1.3. The resulting ARCL values for surface soil are reported in Item 9 with the total of 1.3 pCi/g shown in 9b. The radionuclide contributing the dominant portion of the dose, thus controlling the total ARCL for the mixture, is $^{90}Sr+D$ as seen by inspection of the data entries in Item 8 of Figure B.3.

The entries in Items 6 or 6a of the worksheet are designed to be input as curies (or relative curies) existing on or in the site at the time of release. Thus, for restricted or controlled use, the input inventory is that presently existing on the site. However, unrestricted use can occur immediately, or at some time in the future at the end of restricted or controlled use. The radionuclide inventory would be decayed to some level

1. Case Name: EXAMPLE PROBLEM 2 - Unrestricted Release of surface Soil

2. Preparer's Name: W. E. KENNEDY, JR.

3. Date Prepared: 6/23/83

4. Determination of ARCL Dose Factors to Enter From Table 5.2.2. Check one Use Mode and one Contamination Condition.

Use Mode/Contamination Condition		Contaminated Surfaces Ci/m^2•dpm/100 cm^2		Surface Soil (pCi/g)	✓
Restricted Use @ 0.5 rem/yr		Column 1		Column 4	
Controlled Use @ 0.5 rem/yr		Column 2		Column 4	
Unrestricted Use @ 0.01 rem/yr	✓	Column 3		Column 4	✓

5. Radionuclides Considered (List)	6. Radionuclide Concentrations (Available Units)	6a. Radionuclide* Concentrations ~~(Ci/m^2 or~~ pCi/g)	7. Scenario-Specific ARCL Dose Factors (Step 4; rem/yr per: ~~(Ci/m^2 or~~ pCi/g))	8. Product of Columns 6a & 7 (rem/yr)	9. ARCL - Product of Column 6a & Item 8b (Ci/m^2 or pCi/g)	10. Conversion to dpm/100 cm^2 Multiply Column 9 by 2.2 x 10^{10}
^{14}C	0.50	0.50	8.3E-8	4.2E-8	6.8E-1	
^{63}Ni	0.05	0.05	5.2E-4	2.6E-5	6.8E-2	
$^{90}Sr+D$	0.05	0.05	1.1E-1	5.5E-3	6.8E-2	
$^{137}Cs+D$	0.10	0.10	2.7E-3	2.7E-4	1.4E-2	
^{152}Eu	0.15	0.15	5.0E-3	7.5E-4	2.1E-1	
^{154}Eu	0.15	0.15	5.4E-3	8.1E-4	2.1E-1	

6b. Total: 1.0
*May be taken from Decay Correction Worksheet

8a. Total: 7.4E-3
8b. Annual Dose Limit Divided by 8a.
(~~115 mr~~ 0.01/7.4E-3)
= 1.3 = 8b

9a. Total: 1.3
9b. Check:
9a. Divided by 6b.
(1.3 ÷ 1.0)
= 1.3 = 8b?
yes ✓

10a. Total: _____

11. Present Gross Contamination Level Yielding Future ARCL of Item 9a: (Used only with Decay Correction Worksheet)
Product of Item 9a (or 10a) and Item 9 of Decay Correction Worksheet.
(9a or 10a) _____ x (9 of Figure B.4) _____ = _____ (Ci/m^2, PCi/g, or dpm/100 cm^2)

12. Additional Notes.

FIGURE B.3. Allowable Residual Contamination Level Worksheet for 115-F and 117-F Facilities at the Hanford Site - Example Problem 2

1. Case Name:

2. Preparer's Name:

3. Date:

4. Radionuclides Considered (List)	5. Present Contamination Level (Ci/m^2, dpm/100 cm^2, or pCi/g)	6. Decay Constant (yr-1) (see below)	7. Time in Future (yr)	8. Decayed Contamination Level (Ci/m^2 dpm/100 cm^2, pCi/g)
_____	(_____) • EXP[- (_____) • (_____)](a)			= _____
_____	(_____) • EXP[- (_____) • (_____)]			= _____
_____	(_____) • EXP[- (_____) • (_____)]			= _____
_____	(_____) • EXP[- (_____) • (_____)]			= _____
_____	(_____) • EXP[- (_____) • (_____)]			= _____
_____	(_____) • EXP[- (_____) • (_____)]			= _____

5a. Total = _____ 8a. Total = _____

9a. Ratio of Present to Future Gross Contamination Levels. Quotient of Item 5a and Item 8a. 5a. (_____) ÷ 8a. (_____) = _____

Decay Constants for Potential Nuclides at the 115-F and 117-F Facilities

Nuclide	Constant	Nuclide	Constant	Nuclide	Constant	Nuclide	Constant
^{3}H	5.6E-2	^{63}Ni	7.5E-3	^{135}Cs	3.0E-7	$^{237}Np+D$	3.2E-7
^{14}C	1.2E-4	$^{90}Sr+D$	2.4E-2	$^{137}Cs+D$	2.3E-2	^{238}Pu	7.9E-3
^{57}Co	9.3E-1	^{93}Mo	2.3E-4	^{144}Ce	8.9E-1	^{239}Pu	2.8E-5
^{60}Co	1.3E-1	^{99}Tc	3.2E-6	^{152}Eu	5.0E-2	^{241}Am	1.6E-3
^{55}Fe	2.6E-1	^{124}Sb	4.2E+0	^{154}Eu	8.9E-2		
^{59}Fe	5.6E+0	$^{125}Sb+D$	2.5E-1	$^{235}U+D$	9.8E-10		
^{59}Ni	8.7E-6	^{134}Cs	3.4E-1	$^{238}U+D$	1.5E-10		

(a) The notation EXP [- (a)(b)] means the exponential, e^{-ab}

FIGURE B.4. Allowable Residual Contamination Level Radioactive Decay Correction Worksheet

lower than that existing today. The effect of radioactive decay on the source inventory for a mixture can be determined using the worksheet shown in Figure B.4. The decayed inventory, resulting from the Figure B.4 worksheet, is then used in the Figure B.1 worksheet to determine the ARCL value after radioactive decay. Decay periods of 100 years for Figure B.3 restricted use and 300 years for controlled use are used for this study, but any decay time (in years) can be used in the worksheet. The following instructions explain how to use the Decay Correction Worksheet shown in Figure B.4.

1. Case Name. Enter the name or numerical designation of the case considered.

2. Preparer's Name. Enter the name of the person preparing the Decay Correction Worksheet.

3. Date. Enter the date on which the worksheet was completed.

4. Radionuclides Considered. Enter the radionuclides considered in the space provided. If additional space is required, use additional worksheets.

5. Present Contamination Level. Enter the present source inventory in units of Ci/m^2 for surfaces or pCi/g for soils. This inventory is the T = 0 inventory and can be given in relative or absolute amounts.

6. Decay Constant. Enter the decay constant (yr^{-1}) for each radionuclide in the source inventory. A list of decay constants is shown at the bottom of the worksheet.

7. Time in the Future. The number of years of radioactive decay considered should be entered in Item 7. Note: The same number of years should be entered for each radionuclide.

8. Decayed Contamination Level. The negative exponential of the product of the entries in Items 6 and 7, times the entries in Item 5, is reported in Item 8 as the decayed contamination level. This level should be totaled in Item 8a and entered in the ARCL Worksheet

(Figure B.1) to determine the decayed ARCL value for the specific time in the future considered.

As an example of this procedure, the soil contamination inventory of Example Problem 2 is used in the Decay Worksheet with an assumed decay period of 300 years. Figure B.5 shows the resulting decay calculations as Example Problem 3. The decayed contamination level for this mixture is 0.48 pCi/g in soil. This decayed contamination level is used in the ARCL Worksheet to determine the unrestricted ARCL value for the Soil Contamination Example Problem after 300 years of controlled use. The resulting calculations are shown in Figure B.6 as a continuation of Example Problem 3.

The impact of radioactive decay on the ARCL calculations can be demonstrated by comparing the ARCL results for Example Problems 2 and 3 (see Figures B.3 and B.6). At T = 0, the ARCL value is controlled by ^{90}Sr+D, but after 300 years of radioactive decay the ARCL value is influenced the longer-lived ^{63}Ni. Since the scenario-specific ARCL dose factor for ^{63}Ni is less than the one for ^{90}Sr+D, a higher contamination level can be permitted. Thus, the ARCL for the mixture is 1.3 pCi/g at T = 0, while at T = 300, the value is 680 pCi/g. The presently allowable contamination level that will result in 680 pCi/g in 300 years is 1400 pCi/g.

Finally, the instrument response for the ARCL with field or laboratory equipment can be determined using the Instrument Response Worksheet shown in Figure B.7. The following instructions explain how to use the Instrument Response Worksheet shown in Figure B.7.

1. Case Name. Enter the name or numerical designation of the case considered.

2. Preparer's Name. Enter the name of the person preparing the Instrument Response Worksheet.

3. Date. Enter the date on which the worksheet was completed.

1. Case Name: EXAMPLE PROBLEM 3 - Correction for 300 years of RADIOACTIVE DECAY

2. Preparer's Name: W. E. KENNEDY, JR.

3. Date: 6/23/83

4. Radionuclides Considered (List)	5. Present Contamination Level (Ci/m^2, dpm/100 cm^2, or pCi/g)	6. Decay Constant (yr-1) (see below) (yr-1)	7. Time in Future (yr)	8. Decayed Contamination Level (Ci/m^2 dpm/100 cm^2, pCi/g)
^{14}C	(0.50) •	EXP[- (1.2E-4) •	(300)](a)	= 0.48
^{63}Ni	(0.05) •	EXP[- (7.5E-3) •	(300)]	= 0.0053
$^{90}Sr+D$	(0.05) •	EXP[- (2.4E-2) •	(300)]	= 3.7E-5
$^{137}Cs+D$	(0.10) •	EXP[- (2.3E-2) •	(300)]	= 1.0E-4
^{152}Eu	(0.15) •	EXP[- (5.0E-2) •	(300)]	= 4.6E-8
^{154}Eu	(0.15) •	EXP[- (8.9E-2) •	(300)]	= 3.8E-13
	5a. Total = 1.0			8a. Total = 0.485

9a. Ratio of Present to Future Gross Contamination Levels. Quotient of Item 5a and Item 8a. 5a. (1.0) ÷ 8a. (0.485) = 2.06

Decay Constants for Potential Nuclides at the 115-F and 117-F Facilities

Nuclide	Constant	Nuclide	Constant	Nuclide	Constant	Nuclide	Constant
^{3}H	5.6E-2	^{63}Ni	7.5E-3 ✓	^{135}Cs	3.0E-7	$^{237}Np+D$	3.2E-7
^{14}C	1.2E-4 ✓	$^{90}Sr+D$	2.4E-2 ✓	$^{137}Cs+D$	2.3E-2 ✓	^{238}Pu	7.9E-3
^{57}Co	9.3E-1	^{93}Mo	2.3E-4	^{144}Ce	8.9E-1	^{239}Pu	2.8E-5
^{60}Co	1.3E-1	^{99}Tc	3.2E-6	^{152}Eu	5.0E-2 ✓	^{241}Am	1.6E-3
^{55}Fe	2.6E-1	^{124}Sb	4.2E+0	^{154}Eu	8.9E-2 ✓		
^{59}Fe	5.6E+0	$^{125}Sb+D$	2.5E-1	$^{235}U+D$	9.8E-10		
^{59}Ni	8.7E-6	^{134}Cs	3.4E-1	$^{238}U+D$	1.5E-10		

(a) The notation EXP [- (a)(b)] means the exponential, e^{-ab}

FIGURE B.5. Allowable Residual Contamination Level Radioactive Decay Correction Worksheet - Example Problem 3

1. Case Name: EXAMPLE PROBLEM 3 (CONTINUED) - CORRECTION for 300 YEARS of RADIOACTIVE DECAY: UNRESTRICTED RELEASE OF SURFACE SOIL (SEE EXAMPLE PROBLEM 2)

2. Preparer's Name: W. E. KENNEDY, JR.

3. Date Prepared: 6/23/83

4. Determination of ARCL Dose Factors to Enter From Table 5.2.2. Check one Use Mode and one Contamination Condition.

Use Mode/Contamination Condition		Contaminated Surfaces Ci/m² • dpm/100 cm²		Surface Soil (pCi/g)	✓
Restricted Use @ 0.5 rem/yr		Column 1		Column 4	
Controlled Use @ 0.5 rem/yr		Column 2		Column 4	
Unrestricted Use @ 0.01 rem/yr	✓	Column 3		Column 4	✓

5. Radionuclides Considered (List) (From Fig. B.5)	6. Radionuclide Concentrations (Available Units)	6a. Radionuclide* Concentrations ~~(Ci/m² and~~ pCi/g)	7. Scenario-Specific ARCL Dose Factors (Step 4; rem/yr per: [Ci/m² or pCi/g])	8. Product of Columns 6a & 7 (rem/yr)	9. ARCL - Product of Column 6a & Item 8b (Ci/m² or pCi/g)	10. Conversion to dpm/100 cm² Multiply Column 9 by 2.2 x 10¹⁰
^{14}C		0.48	8.3E-8	4.0E-8	6.7E+2	
^{63}Ni		5.3E-3	5.2E-4	2.8E-6	7.4E+0	
$^{90}Sr+D$		3.7E-5	1.1E-1	4.1E-6	5.1E-2	
$^{137}Cs+D$		1.0E-4	2.7E-3	3.7E-7	1.4E-1	
^{152}Eu		4.6E-8	5.0E-3	2.3E-10	6.4E-5	
^{154}Eu		3.8E-13	5.4E-3	2.0E-15	5.3E-10	

6b. Total: 0.485
*May be taken from Decay Correction Worksheet ✓

8a. Total: 7.2E-6
8b. Annual Dose Limit Divided by 8a.
~~(.05 m~~ 0.01/7.2E-6
= 1.4E+3 = 8b

9a. Total: 680
9b. Check:
9a. Divided by 6b.
(680 ÷ 0.485)
= 1.4E+3 = 8b? ✓ yes

10a. Total: _____

11. Present Gross Contamination Level Yielding Future ARCL of Item 9a: (Used only with Decay Correction Worksheet)
Product of Item 9a (or 10a) and Item 9 of Decay Correction Worksheet.
(9a or 10a) 680 x (9 of Figure B.4) 2.06 = 1400 (Ci/m², PCi/g, or dpm/100 cm²) ✓

12. Additional Notes.

FIGURE B.6. Allowable Residual Contamination Level Worksheet for 115-F and 117-F Facilities at the Hanford Site - Example Problem 3

1. Case Name:

2. Preparer's Name:

3. Date:

4. Radionuclides Considered (List)	5. ARCL (dpm/100 cm^2 or pCi/g)	6. Alpha, Beta or Gamma Energies (MeV)	7. Intensity (Fraction)	8. Detector Efficiency (Fraction or cpm/pCi/g)	9. Sampling Efficiency (Fraction)	10. Instrument Response (Items 5 x 7 x 8 x 9) (counts/minute)

5a. Total _____ 10a. Total _____

FIGURE B.7. Instrument Response Worksheet

4. Radionuclides Considered. Enter the radionuclides considered in the space provided. If additional space is required, use additional worksheets.

5. ARCL. Enter the ARCL values for each radionuclide in the mixture and enter the total in Item 5a. Note: These values are obtained from Items 9 or 10 of the ARCL Worksheet (Figure B.1).

6. Alpha, Beta, or Gamma Energies. Enter the alpha, beta, or gamma energies (in MeV) per disintegration for each radionuclide. Note: Identify the type of particle or photon for each energy.

7. Intensity. Enter the intensity of each alpha, beta, or gamma energy per disintegration for each radionuclide. Note: This should be a fraction $\leq$ 1.0.

8. Detector Efficiency. Enter the detector efficiency for each type of particle or photon for each radionuclide. Note: This should be a fraction $\leq$1.0.

9. Sampling Efficiency. Enter the sampling efficiency for the procedure used. Note: For smear samples of removable surface contamination, this fraction will be <1.0.

10. Instrument Response. The instrument response for each alpha, beta, or gamma is determined by multiplying the values shown in Items 5, 7, 8 and 9. The total instrument response for the mixture is the sum of the values shown and reported in Item 10a.

The successful completion of this worksheet relies upon the development of an instrument calibration curve for each type of particle or photon over a range of decay energies. As an example of the use of this worksheet, the beta energy calibration curve, developed in a previous study for a smear-sample detection system, is assumed (Kennedy et al. 1981). The detection system consists of an Eberline Model No. MS-2 miniscaler with a beta-type scintillation crystal. This system is semiportable and can be used onsite for smear-sample analysis. The energy calibration curve was developed using ^{14}C, ^{99}Tc, ^{36}Cl, ^{210}Bi, and ^{234}Pa sources of known

strength. The resulting calibration curve (Figure B.8) shows counting efficiency (%) versus energy for beta emitters. The efficiencies range from 10% for ^{14}C to about 45% for ^{36}Cl. The example of the use of this worksheet relies on the mixture of beta emitters considered in the first example problem. This mixture consists of ^{14}C (50%), ^{63}Ni (5%), $^{90}Sr+D$ (5%), $^{137}Cs+D$ (10%), ^{152}Eu (15%), and ^{154}Eu (15%). The resulting ARCL for removable surface contamination for this mixture from Example Problem 1 is reported as 1400 dpm/100 cm^2 (see Figure B.2). These radionuclides, their contribution to the total ARCL (from Figure B.2), their beta energies and their beta intensities are entered in the Instrumentation Worksheet (Figure B.9). For this example, the smear samples are assumed to remove 10% of the surface contamination, thus 0.1 is entered for each radionuclide and beta in Item 9. The product of Items 5-9 is entered in Item 10 for each beta, with the total detector response shown in Item 10a.

The resulting instrument response is 28 counts per minute above background. The overall detection efficiency for this instrument and procedure is 28/1400, or about 2%. It should be noted that this instrument

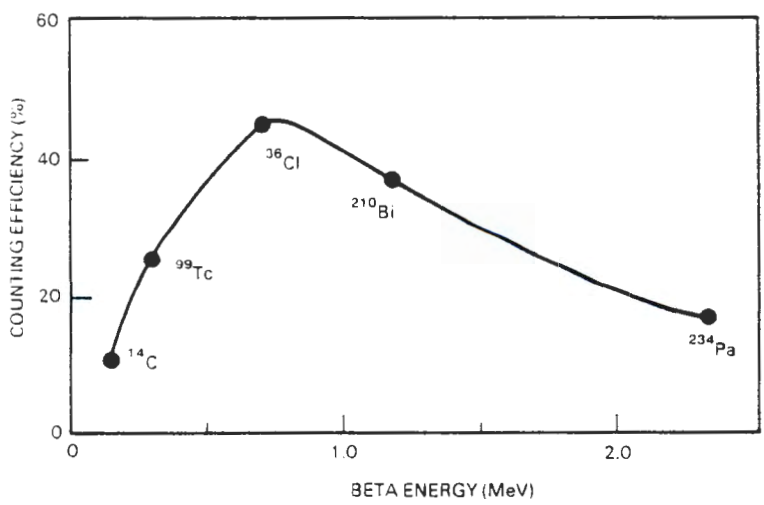

FIGURE B.8. Calibration Curve for the Eberline MS-2 Miniscaler and Beta-Type Scintillation Probe

1. Case Name: EXAMPLE PROBLEM 4 – DPM/100 cm² FROM EXAMPLE PROBLEM 1

2. Preparer's Name: W.E. KENNEDY, JR.

3. Date: 6/23/83

4. Radionuclides Considered (List)	5. ARCL (dpm/100 cm² or pCi/g)	6. ~~Alpha~~, Beta ~~or Gamma Energies~~ (MeV)	7. Intensity (Fraction)	8. Detector Efficiency (Fraction or cpm/pCi/g)	9. Sampling Efficiency (Fraction)	10. Instrument Response (Items 5 x 7 x 8 x 9) (counts/minute)
^{14}C	6.8E+2	0.156	1.0	0.10	0.10	6.8
^{63}Ni	6.8E+1	0.066	1.0	0.05	0.10	0.68
$^{90}Sr+D$	6.8E+1	0.546	1.0	0.40	0.10	2.7
	6.8E+1	2.28	1.0	0.14	0.10	0.95
$^{137}Cs+D$	1.4E+2	0.51	0.95	0.39	0.10	5.2
	1.4E+2	1.2	0.05	0.36	0.10	0.25
^{152}Eu	2.1E+2	0.687	0.71	0.42	0.10	6.3
^{154}Eu	2.1E+2	0.225	1.0	0.22	0.10	4.6

5a. Total 1.4E+3

10a. Total 28

FIGURE B.9. Instrument Response Worksheet - Example Problem 4

is not a "standard" instrument used for field surveys at the Hanford Site. A similar calibration procedure should be conducted to determine the instrument response for the pancake GM probe. Two major differences are apparent with the use of the pancake GM probe instead of the Eberline beta-type scintillation system. First, the GM probe is less sensitive, thus the calibration curve would show a lower percent detection at all energies. Second, the probe would record count rates directly from surfaces, thus an estimate of the fraction of the contamination transferred to a smear is not required.

DISTRIBUTION

No. of
Copies

OFFSITE

27 DOE Technical Information Center

ONSITE

DOE Richland Operations Office

H. E. Ransom

150 UNC Nuclear Industries

R. A. Winship (150)

100 Pacific Northwest Laboratory

J. B. Brown, Jr. (2)
T. D. Chikalla
D. H. Denham
T. H. Essig
L. G. Faust
W. A. Glass
W. E. Kennedy, Jr. (50)
J. M. Latkovich
W. D. McCormack
B. A. Napier (20)
I. C. Nelson
A. M. Platt
W. D. Richmond
J. V. Robinson
R. G. Schreckhise (2)
J. M. Selby
R. I. Smith
J. K. Soldat (2)
S. L. Stein
C. M. Unruh
E. C. Watson (2)
Publishing Coordination (2)
Technical Information (5)