1239337
[C075984117]

Appendix C

Waste Disposal Practices

RECEIVED
JUN 23 2016
EDMC

26

This page intentionally left blank.

Contents

C1 Introduction C-1

C1.1 Trenches C-1

C2 Container Barriers C-2

C2.1 Pre-1970 Burial Operations C-2

C2.2 Post-1970 Burial Operations C-2

C2.3 Waste Containment Requirements C-3

C2.3.1 Pre-1980 Containment Requirements C-3

C2.3.2 Post-1980 Containment Requirements C-4

C3 Specific Waste Packaging Practices C-5

C4 Filler Materials C-6

C5 Radioactive Waste Disposal Practices C-8

C6 Drag-Off Boxes C-8

C7 Liquid Waste C-9

C7.1 Disposal of Liquid Organic Waste in Hanford Site Landfills C-9

C8 Waste Characteristics C-9

C8.1 Radioactive C-9

C8.2 RCRA Waste C-10

C9 Transuranic Waste C-10

C9.1 Transuranic Waste Packaging C-10

C9.2 Transuranic Waste Storage C-11

C9.3 Retrievably Stored Waste C-11

C9.4 Segregated Waste C-12

C10 High Radiation Dose Rate Waste C-13

C11 Caissons C-14

C11.1 Caissons in the 218-W-4B Landfill C-14

C11.2 Vertical Pipe Units in the 218-W-4A Landfill C-15

C12 Class B Poisons C-16

C12.1 Sodium and Alkali Metals C-16

C12.2 Oxidizing and Corrosive Materials C-16

C13 Tritiated Waste C-16

C14 References C-17

Figures

Figure C-1. Diagram of a Typical Solid Waste Trench C-1
Figure C-2. Diagram of Mixed Fission Product Caisson C-14
Figure C-3. Diagram of Alpha Caisson C-15
Figure C-4. Diagram of Vertical Pipe Unit C-15

Table

Table C-1. Historical Waste Packaging Practices C-7

Terms

AEC	U.S. Atomic Energy Commission
ARHCO	Atlantic Richfield Hanford Company
bgs	below ground surface
CWC	Central Waste Complex
DOE	U.S. Department of Energy
DOT	U.S. Department of Transportation
Ecology	Washington State Department of Ecology
EPA	U.S. Environmental Protection Agency
LLW	low-level waste
MFP	mixed fission product
MLLW	mixed low-level waste
OU	operable unit
RCRA	*Resource Conservation and Recovery Act of 1976*
RSW	retrievably stored waste
SWITS	Solid Waste Information Tracking System
TPA	Tri-Party Agreement
Tri-Party Agreement	*Hanford Federal Facility Agreement and Consent Order* (Ecology et al., 1989)
TRU	transuranic (radioactive waste as defined in DOE G 435.1-1, *Implementation Guide for Use with DOE M 435.1-1*)
TRUM	transuranic mixed waste
TSD	treatment, storage, and/or disposal (unit)
UNI	United Nuclear Industries
WIPP	Waste Isolation Pilot Plant

This page intentionally left blank.

C1 Introduction

This appendix discusses historical waste disposal practices including requirements for containers, packaging materials, barriers, filler material, and waste segregation. Historical documents track waste packaging and disposal requirements. Specific waste classifications and packaging instructions were used to segregate waste and track the waste after burial for future retrieval. Types of waste disposal structures are described in this appendix.

C1.1 Trenches

Before construction of treatment, storage, and/or disposal unit (TSD) landfills in the 1990s, most of the waste sent to the 200 Area landfills was disposed to, or retrievably stored in, trenches. A typical solid waste trench is shown in Figure C-1. Nontransuranic waste (low-level waste [LLW], waste containing components currently regulated under WAC 173-303, "Dangerous Waste Regulations," nonradioactive waste) typically was disposed in earthen trenches approximately 4 to 5 m (12 to 16 ft) deep; some transuranic (TRU) trenches are up to 7.6 m (25 ft) deep.

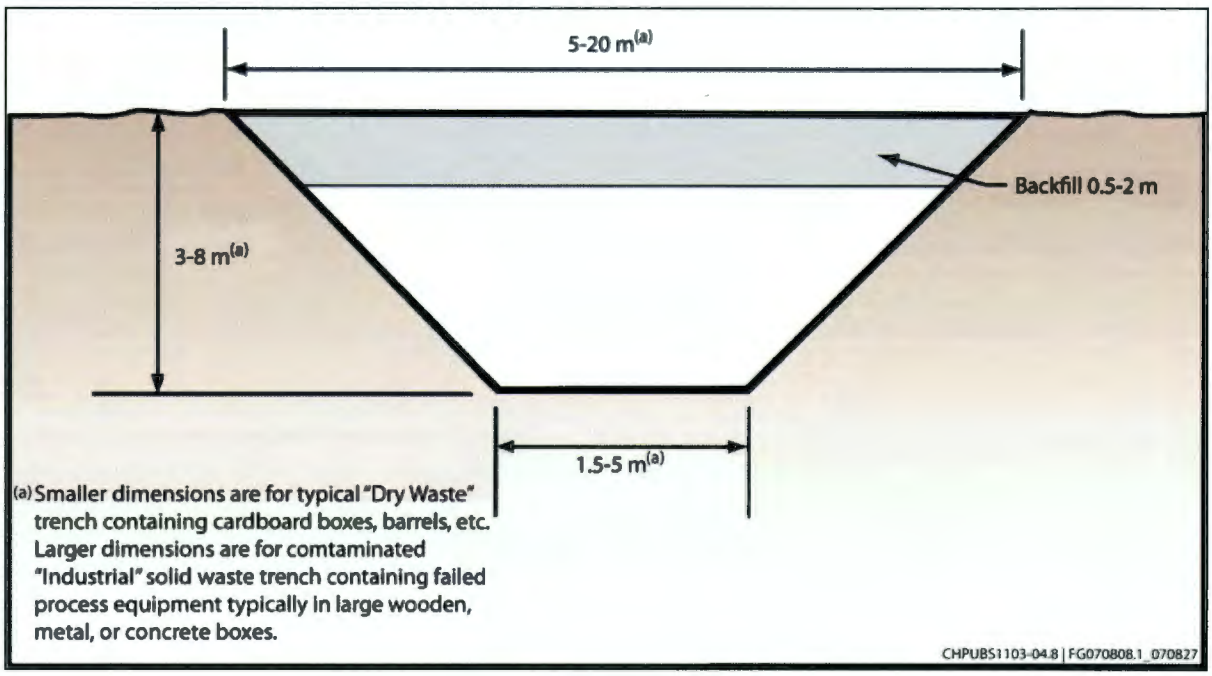

Figure C-1. Diagram of a Typical Solid Waste Trench

The Hanford Site soil, consisting largely of gravel and sand, sloughs off to an angle of repose of about 45 degrees during excavation. This required the movement of significant volumes of earth for the preparation and backfilling of waste trenches. The wide top and relatively narrow bottom of the resulting trench, coupled with the practice of covering radioactive waste by the end of the day when spreadable contamination was present, have resulted in a low ratio of waste volume to land area (BHI-00175, *Z Plant Aggregate Area Management Study Technical Baseline Report*) compared to conventional landfills. Volumes of radioactive waste disposed in the 200-SW-2 Operable Unit (OU) landfills and recorded in the Solid Waste Information Tracking System (SWITS) compared with trench volumes, suggest that an average of 21 percent of the trench volume is waste packages; the remainder is backfill.

Trench locations are marked by external survey marker monuments every 7.6 m (25 ft) around the perimeter; markers are about 4.9 m (16 ft) above the trench floor (WHC-EP-0225, *Contact-Handled Transuranic Waste Characterization Based on Existing Records*).

Both unlined and lined trenches have been used at the Hanford Site. The purpose of a liner in a *Resource Conservation and Recovery Act of 1976* (RCRA)-permitted landfill is to catch water that may come into contact with uncovered waste during burial operations. This water is collected and appropriately treated.

C2 Container Barriers

The following is a brief discussion on the different type of barriers used for disposal at Hanford.

C2.1 Pre-1970 Burial Operations

In the 1960s, small radioactive waste items were usually placed in plastic-lined cardboard boxes or wrapped in grease-proof paper, and then placed in cardboard boxes. Large waste items were wrapped in plastic shrouds. Waste that was highly contaminated with mixed fission products (MFPs) was packaged in high-integrity containers due to the radiation dose rate. The most common method of depositing waste in trenches during the 1960s was to place boxes of solid waste directly into the trenches. Wood or concrete boxes that contained bulky or highly contaminated materials usually were dragged from railroad cars into the trench by bulldozers using long cables. Before 1970, the primary concerns during burial operations were to ensure confinement of contaminated materials during transport, minimize exposure to operating personnel, confine radioactive or chemical materials to prevent releases to the environment, and protect public health.

The packaging of waste materials was designed to maintain safety until the material was securely buried. Because of the favorable hydrological conditions, concern was not given to whether the containers remained intact after burial. Favorable hydrogeological/geochemical conditions include low annual precipitation, distance to groundwater, recharge rate, ion-exchange capacity of the soil, buffer capacity, and low organic content of the soil. Until the mid-1970s, no requirements existed for venting burial containers to allow for the release of built-up pressure. If waste materials were known to generate gases, they were placed within containers constructed of a material known to collapse under the weight of backfilling. Once the container was no longer intact, venting was no longer required.

C2.2 Post-1970 Burial Operations

Beginning in 1970 (in addition to fiberboard boxes, drums, and metal containers that were used to containerize waste), iron or galvanized steel drums and boxes constructed of fiberglass-reinforced polyester, plywood, or concrete were used for packaging small waste items. ARH-CD-353, *Design Criteria Transuranic Dry Waste Burial Containers (Steel and Reinforced Concrete*, released in 1976, stated that burial containers were provided with vents if it was required that they be protected against variations in internal pressure. With the initial release of RHO-MA-222, *Hanford Radioactive Solid Waste Packaging, Storage, and Disposal Requirements* in 1980, each container was required to be capable of being fitted with an air or vacuum hose or a gaseous diffusion vent. Wood, steel, and/or concrete boxes continued to be used for the burial of process equipment during this period. Beginning around 1980, the U.S. Department of Transportation (DOT) required the use of 208 L (55 gal) galvanized drums for radioactive waste packaging. Radioactive waste is defined in DOE G 435.1-1, *Implementation Guide for use with DOE M 435.1-1* (TRU waste).

C2.3 Waste Containment Requirements

Requirements for containment of waste changed over time, with a particularly greater emphasis and regulation on environmental protection in the late 1980s. A chronological summary of containment barrier requirements, procedures, and specifications is presented in the following subsections. Procedures and specifications for containment of waste were applicable sitewide. Although other generator-specific procedures for waste containment existed, the sitewide procedure and specifications represented the required minimum for containment provisions.

C2.3.1 Pre-1980 Containment Requirements

From the beginning of site operations, the Hanford Site emphasized containment of radioactivity and radiological contamination to minimize personnel exposure. Waste containers covered with clean soil in a trench were considered permanently disposed. Most waste containers were single-walled cardboard, concrete, or wooden boxes. Occasionally, loose material, such as soil, would be disposed directly into a trench with no other containment than the trench itself, including the soil backfill placed on top of the waste. Fiberboard and metal drums also were used.

Early standards typically stated that waste was to be handled with minimum exposure to personnel and surroundings. The goal was to follow packaging, handling, transport, and burial procedures in order to minimize personnel exposure and prevent the spread of uncontained radiological contamination to the environment, as stated in one of the earliest site waste disposal specifications published by the Atlantic Richfield Hanford Company (ARHCO), which operated the landfills from 1967 to 1977 (ARH-183, *Specifications and Standards for the Disposal of Battelle Northwest Solid Waste*). According to ARH-183, "Fissionable and small structural material wastes for burial shall be packaged in types of containers presently used which will contain the contamination and withstand normal transfer and handling without rupture."

Additionally, ARH-183 specified that metal containers were required for fissile material as well as toxic materials. Fissile material waste containers were to be sealed, with no requirements for relief of potential gas generation. Items, such as equipment or structural waste, were to have loose contamination contained with an organic film.

In the late 1960s, increasing concern for contaminant release from waste burials to groundwater or the Columbia River led to centralization of disposals in the 200 Area Central Plateau, as far above groundwater and the river as possible within the Hanford Site. The hydrologic conditions on the Central Plateau (soil moisture recharge rates and groundwater movement) were believed to be so benign that disposal there could be considered permanent. Waste disposal standards and requirements, including containment barriers, became more detailed and restrictive as well.

ARH-1842, *Specifications and Standards for the Burial of ARHCO Solid Wastes*, was prepared in 1970. New requirements outlined in this document included the creation of a TRU waste classification and segregation of TRU waste from non-TRU, and packaging of TRU waste to enable retrieval as a contamination-free intact container within 20 years. Containers of waste with contamination that had the potential to become airborne were to have an inner container barrier such as sheet plastic. Solid waste was to be essentially dry. Damp waste was to be packaged in an inner waterproof container. Letter directives were also issued in 1970 to waste generators banning usage of wood, cardboard, and fiberboard containers for TRU waste.

A requirement for two barriers for waste packages was imposed in October 1977. This requirement was intended to prevent airborne releases to the environment. A variety of barrier types was allowed, from tape-sealed boxes to plastic bags to sealed metal cans. Individual facilities issued specifications and practice guidelines for their own usage within the sitewide standards.

C2.3.2 Post-1980 Containment Requirements

The sitewide waste packaging requirements document (RHO-MA-222) was prepared in 1980 and added significant detail to waste package requirements for Hanford Site onsite disposal. TRU waste packages were required to be retrievable, with no loss of containment after 25 years (rather than 20 years), noncombustible, and smaller than a 208 L (55 gal) drum or equivalent size container. Steel containers were to be 16 gauge or thicker and painted or galvanized. All DOT 17C drums were to be galvanized. Non-TRU waste containers were to be designed to withstand 3.7 m (12 ft) of stacking of similar containers and soil overburden, were required to be fire retardant (with the exception of fiberboard boxes and plastic wrap), and were to incorporate at least two containment barriers. Exceptions to double containment included low-activity waste, containers meeting DOT drop test and penetration test criteria, and large containers on a case-by-case basis. Waste with properties that increased potential hazards during handling or burial was given the following additional requirements by RHO-MA-222:

- Radioactive animal waste packages were to consist of a 208 L (55 gal) drum, with a 4 mil minimum polyethylene liner to be treated with slaked lime, and were required to contain an absorbent material.
- Waste packages for organic liquids or potential for gas generation must withstand the maximum anticipated pressure during storage or be fitted with devices to lower the internal pressure or allow for venting of the package.
- Unabsorbed organic liquids were to be placed into a leak-tight 18.9 or 37.9 L (5 or 10 gal) sealed container, placed in a galvanized drum lined with a 90 mil polyethylene liner, and the package was to be filled with absorbent material (enough to absorb at least twice the amount of liquid present).
- Tritiated waste of less than 20 mCi/ft^3 was to be packaged in steel or concrete containers; if greater than 20 mCi/ft^3, the waste was to be sealed in a leak-tight container and then placed in a polyethylene- or asphalt-lined container. Waste packages with greater than 500 Ci of tritiated waste were required to be surrounded by two layers of asphalt.
- All mixed waste packages had to contain the most hazardous waste component permanently.
- Class B poisons were to be packaged inside at least two containment barriers for transportation and immobilized in concrete for burial.
- Asbestos-contaminated waste was to be packaged within at least one layer of 5 mil or thicker polyethylene.

Further revisions of RHO-MA-222 added a requirement for retrievably stored TRU waste to be packaged in DOT 17C drums, either galvanized or aluminized, as well as a requirement for venting of any TRU waste with the potential to pressurize the waste package. Similarly, mixed waste packaging requirements became more detailed with stored mixed waste containers to be DOT 17C galvanized or aluminized steel, with high-strength plastic containers with a greater than 25-year predicted life also acceptable. The inner barrier of the mixed waste double containment was to be a sealed 4 mil or heavier plastic liner or a 90 mil polyethylene drum liner.

In 1988, the successor document for RHO-MA-222 (WHC-EP-0063, *Hanford Radioactive Solid Waste Packaging, Storage, and Disposal Requirements*) was released. Requirements, additions, or modifications to requirements were as follows:

- Banned wood or cardboard containers for packaging TRU waste
- Banned cardboard or fiberboard boxes for LLW (with exceptions of those meeting DOT/U.S. Department of Energy (DOE) requirements, and containing stabilized waste or waste to be compacted)
- Triple containment for radiologically contaminated mercury

In 1991, a standard waste box (a steel DOT container approximately 238 cm by 457 cm by 350 cm [94 in. by 180 in. by 138 in.]) was the only waste container other than the DOT 17C drum that would be acceptable for packaging TRU waste certified for disposal at the Waste Isolation Pilot Plant (WIPP).

The use of drag-off boxes for LLW disposal was prohibited in 1993. The revision also specified that internal containment for mixed waste was to be a 10 mil nylon-reinforced polyethylene fabric, sealed by horse-tailing (i.e., twisting the ends of the liner and tying them to form a seal).

In 1993, detailed requirements were imposed for LLW of Category 1 and 3 activities. Category 3 waste was required to be in a stabilized form or packaged in high-integrity containers meeting U.S. Nuclear Regulatory Commission and Hanford Site requirements. A specific high-integrity container was not required, but a Hanford Site performance-based specification (HS-V-P-0036, *High Integrity Container, 300 Year*) had to be met. Containment barrier requirements have remained stable in subsequent revisions to solid waste acceptance criteria.

The most recent version of documentation of requirements is HNF-EP-0063, *Hanford Site Solid Waste Acceptance Criteria*, Revision 16.

C3 Specific Waste Packaging Practices

In the late 1960s, the first separate waste acceptance criteria documents (ARH-183) were written for the 200 Area landfills. One document was for the 200 Area waste, and one was for the 300 Area waste. These documents provided specifications and standards for industrial waste and routine radioactive waste generation. These documents provided requirements for both radioactive and chemical hazards control with respect to landfills. Chemical hazardous control was not as rigorous at that time. Waste generators were required to segregate waste according to compatibility and content. Small materials usually were packaged in fiberboard boxes although drums, boxes, and concrete were used. Liquid waste was acceptable, only if absorbed by an inert absorbent material, sealed in plastic, and packaged in wooden or metal containers. Equipment usually was buried in plastic or boxes when available, or, if determined to be safe, buried without a protective covering. If it was determined that the equipment had levels of contamination and/or radiation doses too high to bury without confinement, equipment usually was wrapped in plastic and, if required, placed in a burial box for disposal. Equipment also was placed in concrete boxes for disposal.

In December 1970, ARH-1842 was released shortly after the U.S. Atomic Energy Commission (AEC), a DOE predecessor agency, directed the segregation of TRU waste. This document stated that generators and operators must segregate and package waste materials containing or suspected of containing plutonium or other TRU radionuclides for containment and retrievability.

Superseding ARH-1842 was ARH-3032, *Specifications and Standards for the Packaging, Storage, and Disposal of Richland Operations Solid Wastes*, released in 1974. This document classified waste into four segregation groups: nonradioactive, nonhazardous, and combustible waste; LLW, non-TRU waste; TRU waste; and high-dose-rate waste. Packages containing less than 200 c/min of beta/gamma and less than 500 d/min of alpha contamination were classified as nonradioactive and could be disposed of in the Central Landfill Facility. Solid waste containing less than 10 nCi/g of plutonium and/or other TRU radionuclides was considered LLW and was further divided into combustible and noncombustible waste, and separately packaged. Solid waste containing or suspected of containing greater than 10 nCi/g of plutonium and/or other TRU radionuclides was considered to be TRU waste. Currently, the standard is greater than 100 nCi/g of plutonium and/or other TRU radionuclides that are considered to be TRU waste. Failed equipment and large items contaminated with TRU radionuclides were included in this category.

The five revisions of RHO-MA-222, issued between 1980 to 1988, established new definitions for waste classes, placed restrictions on waste contents, provided new specifications for container designs, and included other key elements that directly impacted the waste classification system and segregation requirements.

C4 Filler Materials

Filler materials became an important consideration when waste package void space became a focal point of waste management at the Hanford Site. The addition of nonradioactive materials to fill voids was attractive to improve heat transfer, immobilize radionuclides, reduce gas volume accumulation, increase physical support, and minimize trench overburden subsidence upon waste package collapse.

In 1984, Rev. 2 of RHO-MA-222 stated that in order to prevent subsidence in Hanford Site landfills, interior void spaces within waste packages of LLW must be minimized. To best way to accomplish this was to use a container suited by size and shape to the waste. After packages were loaded with waste, all interior void spaces were packed with suitable inert and stable fillers. However, no quantitative void volume minimum was given. The following exceptions to void filler requirements were also cited in this document:

- Waste to be compacted
- Waste expected to collapse during backfilling
- Instances where void-filling activities would be detrimental to personnel exposure or contamination
- Packages with insignificant effect of void space collapse
- Other verifiable exceptions

Interior void space requirements were restricted to 20 percent or less in the 1985 revision to RHO-MA-222, and only inert filler materials were to be used. Exceptions to void space requirements included high-efficiency particulate air filters, packages with void space less than 0.042 m^3 (1.5 ft^3), heavy-walled pressure vessels, and concrete burial boxes with design lives of greater than 300 years. Mixed waste packages accepted for storage were exempt from void space filler requirements.

Although no void space provisions were imposed for TRU waste, WHC-EP-0063 stated that bulky or heavy items were to be blocked inside the container to prevent shifting.

In 1990, void space was restricted to 10 percent or less in waste packages destined for disposal. The following materials were listed as approved void space fillers for waste packages:

- Diatomaceous earth
- Soil, sand, and lava rock
- Tightly packed cellulose matter
- Clay
- Concrete, cement, and grout
- Gravel
- Other approved materials
- Pyrofoam (added in 1993)

Beginning in 2003, filler material lists have not been included in waste disposal requirements. Waste generator specifications for filler materials are approved by the Hanford Site, and the generator has the responsibility to meet those specifications.

With an increased knowledge about certain types of waste, new and more specific packaging practices were developed for these waste types. The guidelines for waste packaging have changed throughout time. Table C-1 summarizes the changes in packaging since 1967.

Before the late 1960s, no state or federal regulations dictated segregation requirements for packaging waste for burial at the Hanford Site. Attempts were made to package waste to minimize personnel exposure and prevent the spread of uncontained radiological contamination to the environment; however, these were not set guidelines and were done at the discretion of the generator.

Table C-1. Historical Waste Packaging Practices

Date	Packaging Procedures (Generalized)
Pre-1967	Before the late 1960s, there were no state or federal regulations on the packaging of waste for burial at the Hanford Site. There were attempts to package waste to minimize personnel exposure and prevent the spread of uncontained radioactivity to the environment; however, these were not set guidelines and were done at the discretion of the generator (WHC-EP-0845). Waste packaging practices during the 1940s, 1950s, and early 1960s depended primarily on the size and type of waste being packaged. Small materials consisting mainly of dry waste generally were placed in small cardboard containers, which then were placed in larger cardboard cartons for burial. Equipment generally was buried in wooden boxes.
1967	Liquid waste was accepted when absorbed by an inert absorbent material. Deceased laboratory animals or other materials attractive as food for wildlife had to be sealed in plastic and packaged in wooden or metal containers that prevented retrieval of the buried material by wildlife.
1974	Battelle Northwest packaged carcasses in a waterproof inner container with sufficient inert absorbent material to absorb the liquid completely as the carcasses decayed. The waste was also treated with a material, such as unslaked lime, to suppress gas generation during decay, thus ensuring that the integrity of the approved outer container was maintained.
1977	Damp and wet waste was permitted only when vaporization would not pressurize or corrode the container. Containers had to withstand the credible internal pressures generated by the waste or be fitted with pressure modifying devices. Animal carcasses, since they contained liquid organics, were considered organic liquid waste and were not accepted.

Table C-1. Historical Waste Packaging Practices

Date	Packaging Procedures (Generalized)
1980	Liquid organic waste (flashpoint greater than 150°F) was acceptable for retrievably stored waste if properly packaged. Liquid organic waste was to be placed, unabsorbed, into a seal-tight container (preferably 19 to 38 L [5 to 10 gal]). The inner container was overpacked into a 208 L (55 gal) drum with a rigid 4 mil polyethylene liner. The drum was filled to the top with acceptable absorbent necessary to absorb the liquid completely if the inner container was breached.
1982	To meet specifications, no more than 1.7 L (0.45 gal) of organic waste was transferred to a poly-bottle. The poly-bottle was vented and contained two absorbent pads. The filled poly-bottles were sealed into vented and filtered polyethylene bags. The bagged poly-bottles then were packaged for 20-year retrievable storage.
1987	A volume of diatomaceous earth was added equaling four times the estimated volume of a liquid.
Present	For liquid-containing waste where condensate could form in inner plastic packaging (e.g., bags) subsequent to packaging, the condensate shall be eliminated to the maximum extent practical by placing sorbents within the inner plastic packaging (HNF-5841). The type and amount of sorbent required shall be in accordance with Appendix E of HNF-EP-0063. In any case, the amount of liquid may not exceed 1 percent of the volume of the waste or 0.5 percent of waste processed to a stable form (DOE M 435.1-1). Residual liquids in large debris items shall be sorbed or removed. In cases where it is not practical to remove suspected liquids and it is impossible to sample to determine if liquids are present, the liquids shall be removed to the maximum extent possible by draining suspected liquids at low points and placing an adequate amount of sorbent around each item (HNF-5841). In any case, the amount of liquid cannot exceed 1 percent of the volume of the waste (DOE M 435.1-1).

References: DOE M 435.1-1, *Radioactive Waste Management Manual.*
HNF-5841, *Low Level Burial Grounds Waste Analysis Plan.*
HNF-EP-0063, *Hanford Site Solid Waste Acceptance Criteria.*
WHC-EP-0845, *Solid Waste Management History of the Hanford Site.*

C5 Radioactive Waste Disposal Practices

The disposal of radioactive waste at the Hanford Site first came under the authority of DOE Order 5820.2A, *Radioactive Waste Management*, in 1988; and DOE O 435.1, *Radioactive Waste Management*, in 1999 (discussed further in Section 1.3 of the main text).

C6 Drag-Off Boxes

Drag-off boxes were used from the earliest days at the Hanford Site. The first boxes were made of wood, placed in the trench, and covered with soil. Drag-off disposals were typically performed in landfills located next to railroad tracks. A cable was connected to a drag-off box at the location where the waste was generated and stretched along spacer railcars, which were used to keep the train crew at a safe distance from the radioactive box. When the train reached the burial site, a tractor in the landfill dragged the box to the end of a trench.

The early wooden boxes often collapsed after disposal. In cases where a large radiation field was present, this occurrence could overexpose workers. Some drag-off boxes failed while they were being pulled to the end of the trench, potentially overexposing workers. The boxes were redesigned and eventually upgraded to the concrete burial box that became standard (WHC-EP-0912, *The History of the 200 Area Burial Ground Facilities*). The concrete boxes were not designed for retrieval but were intended to be the final repository for the waste (WHC-EP-0645, *Performance Assessment for the Disposal of Low-Level Waste in the 200 West Area Burial Grounds*).

C7 Liquid Waste

For the 200-SW-2 OU landfills, a review of historical records (Waste Information Data System) has shown that bulk disposal of liquid waste was not a significant contributor to the waste loading at sites receiving LLW (see also HW-77274, *Burial of Hanford Radioactive Wastes*).

C7.1 Disposal of Liquid Organic Waste in Hanford Site Landfills

Nearly all contaminated liquids from Hanford Site processing facilities have been routed to ponds, cribs, ditches, underground storage tanks and, recently, onsite liquid effluent treatment facilities. Historical landfill records reviewed to date (including SWITS, site drawings, and other documents) indicate that only a very small fraction of contaminated liquids, including some organic liquids, may have been packaged and disposed of in some 200 Area landfills or specific trenches.

Because landfills were intended for solid waste (dry) disposal, liquids disposed to landfills were contained and typically packaged with absorbents to immobilize liquids. Liquid waste was normally directed to liquid waste disposal facilities rather than landfills.

Existing records associated with potential disposal of liquids in landfills are complex and unique to each landfill. Evaluation of these records is complicated by several factors. For instance, detailed individual disposal records for waste disposed from 1944 to 1960 do not exist for all portions of the landfills that were active during that period. However, certain field logbooks from the 1940s to the 1960s indicate the possible inclusion of liquids. SWITS includes data fields for solid/liquid waste, but the descriptions of chemical constituents were not entered in all cases. While some of the engineering drawings for the landfills also identify portions of some trenches as "low-level waste and mixed waste with liquid" or as "transuranic and mixed waste with liquid," details on the chemical makeup of the buried liquids typically are not provided in the historical records.

C8 Waste Characteristics

The following is brief discussion on the properties of the waste disposed of in the 200-SW-2 OU landfills.

C8.1 Radioactive

Estimated quantities of plutonium and uranium that were disposed into each of the 200-SW-2 OU landfills are summarized in the conceptual site models in Appendix D. The estimated quantities are based on process knowledge of the waste stream going to the particular landfill, official burial records, and as reported in SWITS. Based on these sources, the 218-W-2 Landfill received the largest quantity of plutonium. Over 90 percent of the mass of plutonium is disposed in just four landfills: 218-W-1, 218-W-2, 218-W-3, and 218-W-4A, which received the largest quantity of uranium.

C8.2 RCRA Waste

At the time that much of the Hanford Site waste was generated, no definitions or regulations governed the final disposition of chemical constituents. In the early 1980s, low-level liquid organic waste was banned from land disposal at Hanford Site landfills (WHC-EP-0912). Although many of these constituents subsequently have been classified as hazardous or dangerous waste by the U.S. Environmental Protection Agency (EPA) and Washington State Department of Ecology (Ecology), only waste disposed after RCRA regulations went into effect is subject to active management as mixed, hazardous, or dangerous. Where regulated chemical and radioactive constituents are combined in a waste form, waste disposed (after RCRA regulations went into effect) is subject to management as "mixed waste." Ecology has regulated mixed waste since August 19, 1987, the date that RCW 70.105.109, "Hazardous Waste Management," "Regulation of Wastes with Radioactive and Hazardous Components," went into effect.

In 1987, DOE issued the "byproduct rule," which clarified its position on the hazardous components of mixed waste to be regulated by RCRA (10 CFR 962, "Byproduct Material"; 52 FR 15937, "Radioactive Waste, Byproducts Material Final Rule"). On November 23, 1987, EPA authorized Ecology to regulate the hazardous constituents of mixed waste at the Hanford Site (52 FR 35556, "Final Authorization of State Hazardous Waste Management Program; Washington").

C9 Transuranic Waste

AEC initially defined TRU waste as "wastes with known or detectable contamination of transuranium nuclides." In March 1970, The AEC Immediate Action Directive 0511-21, *Policy Statement Regarding Solid Waste Burial* (AEC, 1970), directed AEC sites to segregate TRU waste and place it in retrievable storage that would allow the waste to be retrieved within 20 years. Before this date, no effort was made to segregate TRU waste from LLW or to make waste retrievable. The Hanford Site used 1 nCi/g as the dividing point between LLW and TRU waste.

In 1973, the TRU waste segregation limit was established at 10 nCi of TRU isotopes per gram. In 1982, the limit was changed to 100 nCi/g. This limit was enacted by Congress in 1992. Because of the changing definition of TRU waste, and lack of facilities to measure the TRU content of the waste, waste generated and stored between 1970 and 1982 could contain less than the current threshold of 100 nCi/g for defining TRU waste. This waste has been termed suspect TRU because some of this waste may have been erroneously designated as LLW following radiological characterization. Consequently, the waste was categorized as TRU by waste process knowledge rather than by assay. All remote-handled retrievably stored waste (RSW) (drum and box) is considered suspect because the capability to determine (by assay) the TRU waste content of these containers did not exist at the Hanford Site or DOE complex. When the Tri-Party Agreement (TPA) (Ecology et al., 1989, *Hanford Federal Facility Agreement and Consent Order*) M-091 Milestones were revised in 2003, the term retrievably stored waste was defined to refer to what was primarily termed suspect TRU waste.

C9.1 Transuranic Waste Packaging

Before the 1970s, there was no separate designation of radioactive waste as TRU waste. Since 1970, TRU waste has been set aside for disposal at WIPP. To indicate the segregation of TRU waste from LLW, some facilities used color-coded drums. For a period, yellow drums were used to package LLWs, and black drums contained TRU waste. In the 200 Areas, color-coded drum lids indicated the segregation of hood waste from room waste. Hood waste was generated inside processing hoods and was considered highly contaminated with plutonium. Room waste was generated from operations outside the processing hoods and were considered potentially contaminated with plutonium. Solid waste was segregated into

combustible hood waste, combustible room waste, and noncombustible hood and room waste. Combustible hood waste was composed of material such as plastic, rubber, rags, and cardboard. Combustible hood waste, combustible room waste, and noncombustible hood and room waste were placed in drums with yellow lids, silver domes, and red domes, respectively.

C9.2 Transuranic Waste Storage

In accordance with DOE Order 5820.2A, TRU waste was segregated into combustible and noncombustible waste. At the time that DOE Order 5820.2A was in effect, the waste was segregated based on potential future processing requirements. Drums were used for the smaller TRU items while boxes were used for the larger TRU items or equipment pieces. Separate storage facilities and trenches were designed for TRU waste storage. Solid TRU waste was packaged, stacked, and stored in trenches with an earth, gravel, plywood, concrete, or asphalt pad foundation. Drummed items were stored on asphalt pads in underground trenches, while hot cell waste was placed in caissons. Boxed larger items also were stored primarily in trenches. TRU waste that was unsuitable for asphalt pad or caisson storage because of size, chemical composition, security requirements, or surface radiation was packaged in reinforced-wood, concrete, or metal boxes. High-dose-rate solid waste was defined as waste that emitted high levels of beta and gamma radiation. This waste typically included failed equipment from B Plant, tank farm operations, and other activities. Small high-dose-rate items were transported to the caissons or trenches. Large items or failed equipment were buried in industrial waste trenches.

In the late 1970s, more specific packaging procedure requirements were introduced. Multiple containment barriers were required in waste packaging. Additionally, more concern was given to void spaces left in waste packages and the increased use of filler materials. As time passed, the regulations became more focused, and waste disposal followed more rigorous standards.

C9.3 Retrievably Stored Waste

In this work plan, the term RSW is used to be consistent with the current TPA (Ecology et al., 1989) Milestone M-091 definition as follows: RSW is waste that is or was potentially contaminated with significant concentrations of TRU isotopes when it was placed in the 218-W-4B, 218-W-4C, 218-W-3A, and 218-E-12B Landfill trenches after May 6, 1970. During the retrieval process, containers of RSW will be segregated into two categories: contact-handled RSW and remote-handled RSW. Subsequent analysis and categorization of RSW pursuant to RCRA, RCW 70.105, the *Atomic Energy Act of 1954*, and the *Waste Isolation Pilot Plant Land Withdrawal Act* will result in most or all of the waste being classified as one of the following types:

- Contact-handled LLW
- Remote-handled LLW
- Contact-handled mixed low-level waste (MLLW)
- Remote-handled MLLW
- Contact-handled TRU
- Contact-handled transuranic mixed (TRUM)
- Remote-handled TRU
- Remote-handled TRUM

RSW does not include waste in containers that have deteriorated to the point that they cannot be retrieved and stabilized (e.g., placed in overpacks) in a manner that would allow them to be transported and designated without posing significant risks to workers, the public, or the environment. With respect to any

such containers, and with respect to any release of RSW, the decision as to how to move forward will be determined through the cleanup process set forth in RCRA; RCW 70.105; and/or the *Comprehensive Environmental Response, Compensation, and Liability Act of 1980*, as appropriate. Those processes may result in additional requirements for the remediation of such waste (M-091-09-01, *Federal Facility Agreement and Consent Order Change Control Form Modification of Hanford Federal Facility Agreement and Consent Order [HFFACO] M-091 Series Milestones*).

C9.4 Segregated Waste

From 1944 to 1970, waste was not segregated (referred to as unsegregated waste in this work plan). Unsegregated radioactive waste was disposed of through shallow land burial, including some alpha-contaminated waste. Records and inventories of waste disposal practices from this period are incomplete. The records that exist indicate the general types of waste disposed, an estimate of uranium and plutonium inventories, and a very general indication of some of the types of currently regulated materials that may have been disposed to a particular site (e.g., silver, boron, nitrate, uranium, and lead). The disposal site was considered the location for final disposition of solid waste. Packaging was designed for transport, with little regard for long-term integrity; early radiological waste, including most early alpha-contaminated waste, usually was wrapped in burlap or paper or contained in metal, concrete, or wooden or cardboard boxes. Early industrial waste with high dose rates (e.g., process tubes and jumpers) was often packaged in concrete boxes or large concrete tombs to mitigate landfill handling problems. Some smaller, lower dose rate waste was dumped directly from trucks into trenches with no packaging. Early waste was more rarely packaged in 208 L (55 gal) drums or steel boxes and cans. The practice of using durable containers rather than cardboard or wooden boxes became more common over time. The use of cardboard boxes for disposal to the landfills was discontinued in 1984 (WHC-EP-0912). The waste was considered dry waste and did not contain significant volumes of liquid (e.g., HW-77274). Numerous alternatives were available for disposal of large volumes of liquid (e.g., cribs, trenches, ditches, underground storage tanks, and reverse wells); therefore, the early landfills were not used for disposal of bulk liquids. Occasionally, small volumes of bottled, highly contaminated liquids were placed inside a 208 L (55 gal) drum, and the drum was filled with concrete to provide shielding and stabilize the liquid waste (DOE/RL-96-81, *Waste Site Grouping for 200 Areas Soil Investigations*).

Before 1965, waste was covered with approximately 0.6 m (2 ft) of soil. Since 1965, waste was covered with approximately 1.2 m (4 ft) of soil cover but, by the late 1960s, the standard was changed to approximately 2.4 m (8 ft). After 1967, all alpha-contaminated waste from the N Reactor and 300 Area was sent to the 200 Areas for disposal (DOE/RL-96-81). Since the mid-1960s, increasing attention to reducing potential contamination to groundwater led to a decision to send all LLW from all Hanford Site facilities for burial within the 200 Areas, 60 to 90 m (200 to 300 ft) above groundwater. The last 300 Area landfill (618-7 Burial Ground) was closed in 1972. The last 100 Area landfill closed in 1973 (WHC-EP-0912).

Since 1970, approximately 37,400 RSW containers have been placed in retrievable storage at the Hanford Site. The majority of these waste containers (about 26,200 drums) were stacked vertically on asphalt pads in earth-covered trenches in the 200 Area landfills. Some containers of TRU waste have been retrieved. Of these, some have been processed while others are in aboveground storage in the Central Waste Complex (CWC), which is a RCRA TSD unit. Retrieved waste containers determined to be TRU have been or will be moved to interim storage at the CWC or another permitted storage unit where they enter the TRU program, which is responsible for processing and certification of the waste for shipment to WIPP for disposal. It is estimated that approximately 50 percent of the retrieved waste will contain less than 100 nCi/g of TRU material and will be determined to be MLLW or LLW. This waste will

be transported to a permitted TSD unit or to the Environmental Restoration Disposal Facility to be treated and disposed of in accordance with applicable regulatory requirements.

RSW retrieval from the landfills has been performed in several stages. A pilot retrieval program conducted in 1993 and 1994 recovered 23 waste drums and transferred them to the CWC. The purposes of the pilot program were to measure drum corrosion rates and develop other information for planning future retrieval operations. In 1996, an additional 306 suspect TRU waste drums were removed from storage in the low-level burial ground and transferred to the CWC. Additional retrieval campaigns were performed between 1999 and 2010 recovering about 24,700 containers (total for all campaigns) and sending them to the CWC. From the CWC, waste undergoes processing for final disposal to WIPP or other appropriate facilities, as described in the previous paragraph. The waste is often repackaged into multiple containers as part of the retrieval and processing, so the number of containers that has been processed is more than the total retrieved even though some of the retrieved waste is still at the CWC awaiting disposition. Of a total volume of approximately 14,940 m^3 (527,600 ft^3) of RSW in 200-SW-2 OU landfills, about 11,970 m^3 (422,716 ft^3) have been retrieved to date (2015).

C10 High Radiation Dose Rate Waste

The term high radiation dose rate has been defined consistently by DOE and its predecessor agencies, the Energy Research and Development Administration and the AEC, and its sister agency, the U.S. Nuclear Regulatory Agency, since 1957. As currently stated in 10 CFR 835.2(a), "Occupational Radiation Protection," "Definitions," "High radiation area means any area, accessible to individuals, in which radiation levels could result in an individual receiving a deep dose equivalent in excess of 0.1 rem (0.001 Sv) in 1 hour at 30 cm (76 in.) from the radiation source or from any surface that the radiation penetrates."

Over time, the 200-SW-2 OU landfills have accepted high radiation dose rate items. Waste acceptance criteria have varied over time but, in general, have been defined as follows (WHC-EP-0845, *Solid Waste Management History of the Hanford Site*):

- Before 1980, dry waste landfills generally were restricted from receiving waste with surface dose rates over 100 mrem/hr. However, packages were evaluated on an individual basis, depending on container integrity and method of handling, and some surface dose rates are considerably higher. Industrial waste landfills typically received waste with surface dose rates over 100 mrem/hr.
- Since 1980, limits for surface dose rates of non-TRU contact-handled waste in the landfills varied from 200 to 500 mrem/hr (the limit varied over time and was dependent on the container type and size).
- Since 1980, limits for surface dose rates of non-TRU remote-handled waste in the landfills varied from 3,000 to 5,000 mrem/hr (the limit was dependent on the transport vehicle).
- Waste acceptance criteria (HNF-EP-0063) in effect for the 200-SW-2 OU landfills when they ceased operations in 2004 stated that containers with dose rates less than or equal to 200 mrem/hr at contact and less than 100 mrem/hr at 0.3 m (1 ft) were acceptable. Packages larger than 208 L (55 gal) could have a marked point on the bottom or side with a surface dose rate up to 1,000 mrem/hr. Contact-handled containers exceeding these limits required container-specific review and approval.

- Remote-handled waste was defined as packaged waste whose external surface dose rate exceeds the limits for contact-handled waste. It was accepted until 2004 at the 200-SW-2 OU landfills if approved through both a waste stream profile sheet and a container-specific shipment. Remote-handled waste was required to meet the applicable DOT dose rate restrictions or an approved package-specific safety document for transport. Remote-handled waste was required to be configured for unloading such that personnel exposures are maintained as low as reasonably achievable.

Waste is no longer accepted for disposal at the 200-SW-2 OU landfills. The 218-W-5 Landfill, Trenches 31 and 34, are designed and permitted for RCRA-compliant waste disposal. Both trenches are out of the scope of the 200-SW-2 OU work plan.

C11 Caissons

Caissons were typically designed to receive remote-handled high-dose-rate and TRU waste. However, in practice, many items in the caissons have relatively low dose rates. Approximately 750 of the 1,000 items in the non-TRU caissons have dose rates of less than 200 mrem/hr (SWITS). Several types of caissons historically were used in the 200 Areas.

Alpha and MFP caissons received waste that was transported to the caisson in a truck-mounted cask that was shielded. The waste generally was packaged in 19 L (5 gal) paint cans. Caissons consisted of concrete/steel chambers set below ground surface (bgs), with an associated offset steel riser pipe through which waste packages were dropped into the caisson. Caissons typically are ventilated to reduce exposures to personnel depositing the waste packages. The offset steel riser pipes also provided protection from direct radiation exposure from the waste below.

A type of caisson called a vertical pipe unit was configured in one of two ways: as a 14.6 m (48 ft) below grade, 76 cm (2.5 ft) diameter vertical steel casing (e.g., those in the 218-W-4A Landfill, near the end of Trench 18), or by welding together two to five open-ended 208 L (55 gal) drums end to end and setting them vertically in the ground (e.g., those in the 218-W-4A Landfill, Trench 16) (BHI-00175).

C11.1 Caissons in the 218-W-4B Landfill

The caissons in the 218-W-4B Landfill were used for the disposal of alpha- and MFP-containing waste. These caissons are further detailed in the following paragraphs. This information is currently judged (RHO-65463-80-126, "Inconsistencies in 218-W-4B Site Data") to be the most accurate based on the available information.

Six general caissons (also called dry waste or MFP caissons), 218-W-4B-C1 through 218-W-4B-C6, which contain LLW, were filled from 1968 to 1990. Also called dry waste or MFP-type caissons, four of them are 2.4 m (8 ft) in diameter and 3.1 m (10 ft) high. According to the Waste Information Data System, two of these caissons were constructed the same way as the alpha caissons but with corrugated metal instead of steel and concrete. The last shipment of caisson waste to the 218-W-4B Landfill was deposited into MFP caisson 6 in 1990 (Figure C-2).

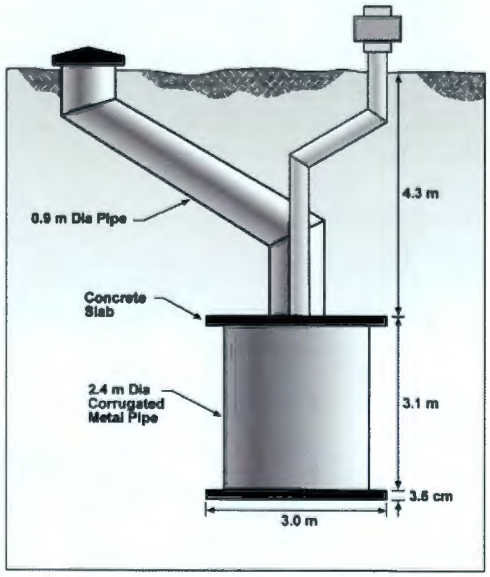

Figure C-2. Diagram of Mixed Fission Product Caisson

Caissons 218-W-4B-CA1 through 218-W-4B-CA5 (also called alpha caissons) were planned for TRU waste. From 1970 to 1988, retrievably stored TRU waste was placed in four of the five caissons. The caissons have been isolated; one caisson (alpha 5) has not been used. The five alpha caissons are approximately 2.7 to 3 m (8.75 to 10 ft) diameter, 3 m (10 ft) high concrete and steel covered vaults with steel lifting lugs and a 0.9 m (3 ft) diameter access chute. The alpha caissons weigh approximately 11,800 kg (26,000 lb) (Figure C-3).

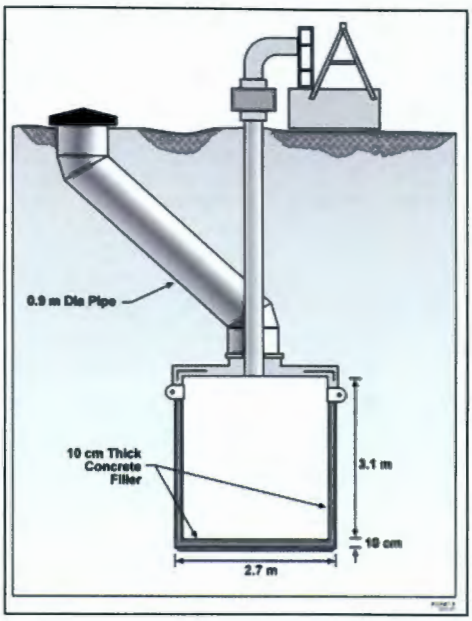

Figure C-3. Diagram of Alpha Caisson

One caisson (218-W-4B-CU1) is referred to in the literature as a United Nuclear Industries (UNI) below-grade, silo-type caisson, used for high-activity N Reactor LLW. The UNI silo-type caisson is 3 m (10 ft) in diameter and 9.2 m (30 ft) tall with corrugated pipe containers placed on a concrete foundation with a top concrete shielding slab. The caisson has a 1.1 m (3.5 ft) diameter access chute. Waste is placed beneath a concrete slab, 4.6 m (15 ft) below grade. The chute of this caisson was plugged shortly after it began receiving waste. The caisson was taken out of service after the plugging event occurred and contains only two waste packages (SWITS; WHC-EP-0912) (not pictured).

Starting from the southeast corner of the landfill, the caissons in order are 218-W-4B-C1, 218-W-4B-C2, 218-W-4B-CU1, 218-W-4B-C6, 218-W-4B-CA3, 218-W-4B-C5, 218-W-4B-C3, 218-W-4B-CA4, 218-W-4B-CA2, 218-W-4B-CA5, 218-W-4B-CA4, and 218-W-4B-CA1 (DOE/EIS-0286F, *Final Hanford Site Solid (Radioactive and Hazardous) Waste Program Environmental Impact Statement*).

Although sources conflict on the placement of the caissons, this order is based on the literature consensus. No additional waste placement is planned for any of these caissons.

C11.2 Vertical Pipe Units in the 218-W-4A Landfill

The 218-W-4A Landfill contains 21 miscellaneous dry waste trenches, oriented east to west, and 6 or 8 vertical pipe units or caissons. The vertical pipe units were installed near the east end of Trench 16 and consist of two to five 208 L (55 gal) drums welded together with the lids and bottoms removed. They were placed 4.6 m (15 ft) bgs. Figure C-4 depicts a typical vertical pipe unit configuration. Two deeper caissons may be located between Trenches 17, 18, and 19 (RHO-CD-673, *Handbook 200 Areas Waste Sites*).

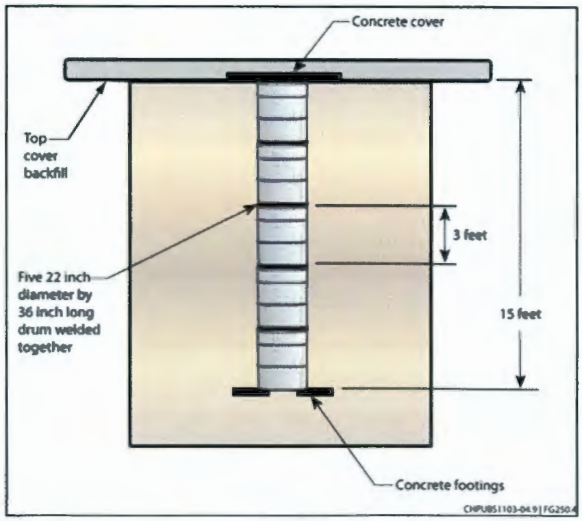

Figure C-4. Diagram of Vertical Pipe Unit

C12 Class B Poisons

Class B poisons are a focus of disposal because of the effects the poisons had on the environment and personnel safety. Solid waste containing Class B poisons was packaged in double containment. Small quantities were placed in small containers, which then were placed in storage or disposal containers, and the small containers were fixed or surrounded by concrete on all sides. In 1980, it was determined that packaging for larger quantities would be approved on a case-by-case basis. In the mid-1980s, mercury (a specific Class B poison) was confined in a concrete culvert, and the culvert then was placed in a drum. It was common to fill the space around the culverts with bagged poly bottles and other items. In 1992, Pacific Northwest Laboratory packaged liquid metallic mercury in a polyethylene or glass container with a screw-type lid.

C12.1 Sodium and Alkali Metals

Before 1977, no documented packaging requirements existed for sodium and alkali metals. Beginning in 1977, special approval was required of any waste package containing sodium or other alkali metal. Unreacted alkali metal in solid waste was not accepted for disposal. The shipper had to specify quantities, concentrations, and contamination levels of each alkali metal to ensure that the appropriate methods of handling, storage, and/or disposal were used. The requirements established in 1977 for sodium and alkali metals are being observed today.

C12.2 Oxidizing and Corrosive Materials

Oxidizing and corrosive materials are of special interest because they break down the integrity of the container in which they are packaged. During the breakdown of the containers, gases are generated. It was not until the late 1960s that oxidizing material was prohibited from being packaged with combustible waste or in combustible containers. Rags used to clean up oxidizing materials had to be well rinsed to remove all oxidizing materials before they were discarded. Beginning in 1984, waste containing corrosives was to be treated to eliminate their corrosive properties and form a chemically stable compound, or they were packaged for the storage container not to be exposed to the corrosive agent during its 25-year design life. To enhance the corrosive protection, the interior and exterior of the waste containers were galvanized or painted with a two-component epoxy-polyamide paint system or functionally equivalent paint.

C13 Tritiated Waste

Beginning in the early 1980s, procedures were introduced for packaging tritium waste. Tritiated waste, including tritium oxide in liquid form, was to be packaged in steel or concrete containers. Waste containing tritium or tritium oxide was absorbed on silica gel, packaged in leak-tight 3.8 L (1 gal) metal cans, surrounded by asphalt, and packaged in 208 L (55 gal) drums. Waste packages with heat output greater than 3.53 W/m^3 required a special thermal analysis to determine whether special separation distances were required for the waste in the landfill trench. In 1993, tritium waste was defined as waste containing greater than 20 mCi of tritium/m^3 of waste, and its disposal requirements changed as follows:

- Tritiated waste, with greater than 100 Ci tritium/m^3 in either absorbed liquids or solids, was to be sealed in one layer of 4 mil (nominal) or thicker polyethylene and disposed of in a steel or concrete package.
- Containment systems for tritiated waste, with greater than or equal to 100 Ci tritium/m^3, were to be documented in the storage or disposal approval record.

C14 References

10 CFR 835.2, "Occupational Radiation Protection," "Definitions," *Code of Federal Regulations*. Available at: http://www.ecfr.gov/cgi-bin/text-idx?SID=398117b26aa6d46d90072df5eded5b05&mc=true&node=pt10.4.835&rgn=div5#se10.4.835_12.

10 CFR 962, "Byproduct Material," *Code of Federal Regulations*. Available at: http://www.ecfr.gov/cgi-bin/text-idx?SID=398117b26aa6d46d90072df5eded5b05&mc=true&node=pt10.4.962&rgn=div5.

52 FR 15937, "Radioactive Waste, Byproducts Material Final Rule," *Federal Register*, Vol. 52, p. 15937, May 1, 1987.

52 FR 35556, "Final Authorization of State Hazardous Waste Management Program; Washington," *Federal Register*, Vol. 52, p. 35556, September 22, 1987.

AEC, 1970, *Policy Statement Regarding Solid Waste Burial*, AEC Immediate Action Directive 0511-21, U.S. Atomic Energy Commission, Washington, D.C., March 20.

ARH-183, 1968, *Specifications and Standards for the Disposal of Battelle Northwest Solid Wastes*, Atlantic Richfield Hanford Company, Richland, Washington. Available at: http://pdw.hanford.gov/arpir/index.cfm/viewDoc?accession=0082207H.

ARH-1842, 1970, *Specifications and Standards for the Burial of ARHCO Solid Wastes*, Atlantic Richfield Hanford Company, Richland, Washington. Available at: http://pdw.hanford.gov/arpir/index.cfm/viewDoc?accession=0082006H.

ARH-3032, 1974, *Specifications and Standards for the Packaging, Storage, and Disposal of Richland Operations Solid Wastes*, Atlantic Richfield Hanford Company, Richland, Washington. Available at: http://www.osti.gov/scitech/servlets/purl/4233378.

ARH-CD-353, 1976, *Design Criteria Transuranic Dry Waste Burial Containers (Steel and Reinforced Concrete)*, Rev. 2, Atlantic Richfield Hanford Company, Richland, Washington. Available at: http://www.osti.gov/scitech/servlets/purl/7196254.

Atomic Energy Act of 1954, as amended, 42 USC 2011, Pub. L. 83-703, 68 Stat. 919. Available at: http://epw.senate.gov/atomic54.pdf.

BHI-00175, 1995, *Z Plant Aggregate Area Management Study Technical Baseline Report*, Rev. 00, Bechtel Hanford, Inc., Richland, Washington. Available at: http://pdw.hanford.gov/arpir/index.cfm/viewDoc?accession=D198038137.

Comprehensive Environmental Response, Compensation, and Liability Act of 1980, 42 USC 9601, et seq., Pub. L. 107-377, December 31, 2002. Available at: http://epw.senate.gov/cercla.pdf.

DOE G 435.1-1, 1999, *Implementation Guide for use with DOE M 435.1-1*, U.S. Department of Energy, Washington, D.C. Available at: https://www.directives.doe.gov/directives-documents/400-series/0435.1-EGuide-1.

DOE M 435.1-1 Admin Chg 2, 1999, *Radioactive Waste Management Manual*, U.S. Department of Energy, Washington, D.C. Available at: https://www.directives.doe.gov/directives-documents/400-series/0435.1-DManual-1-admchg2.

DOE O 435.1 Chg 1, 1999, *Radioactive Waste Management*, U.S. Department of Energy, Washington, D.C. Available at: https://www.directives.doe.gov/directives-documents/400-series/0435.1-BOrder-chg1.

DOE Order 5820.2A, 1988, *Radioactive Waste Management*, U.S. Department of Energy, Washington, D.C. Available at: https://www.directives.doe.gov/directives-documents/5800-series/5820.2-BOrder-a.

DOE/EIS-0286F, 2004, *Final Hanford Site Solid (Radioactive and Hazardous) Waste Program Environmental Impact Statement*, Richland, Washington, U.S. Department of Energy, Richland Operations Office, Richland, Washington. Available at: http://energy.gov/sites/prod/files/EIS-0286-FEIS-01-2004.pdf.

DOE/RL-96-81, 1997, *Waste Site Grouping for 200 Areas Soil Investigations*, Rev. 0, U.S. Department of Energy, Richland Operations Office, Richland, Washington. Available at: http://pdw.hanford.gov/arpir/index.cfm/viewDoc?accession=D197197143.

Ecology, EPA, and DOE, 1989, *Hanford Federal Facility Agreement and Consent Order*, 2 vols., as amended, Washington State Department of Ecology, U.S. Environmental Protection Agency, and U.S. Department of Energy, Olympia, Washington. Available at: http://www.hanford.gov/?page=81.

HNF-5841, 2013, *Low Level Burial Grounds Waste Analysis Plan*, Rev. 4, Mission Support Alliance, LLC, Richland, Washington. Available at: http://pdw.hanford.gov/arpir/index.cfm/viewDoc?accession=1502030694.

HNF-EP-0063, 2011, *Hanford Site Solid Waste Acceptance Criteria*, Rev. 16, CH2M HILL Plateau Remediation Company, Richland, Washington. Available at: http://www.hanford.gov/files.cfm/HNF-EP-0063_Rev16_041111_Website.pdf.

HS-V-P-0036, 1996, *High Integrity Container, 300 Year*, Rev. A, Westinghouse Hanford Company, Richland, Washington. Available at: http://pdw.hanford.gov/arpir/index.cfm/viewDoc?accession=0082370H.

HW-77274, 1963, *Burial of Hanford Radioactive Wastes*, General Electric Company, Richland, Washington. Available at: http://pdw.hanford.gov/arpir/index.cfm/viewDoc?accession=0081633H.

M-091-09-01, 2010, *Federal Facility Agreement and Consent Order Change Control Form Modification of Hanford Federal Facility Agreement and Consent Order (HFFACO) M-091 Series Milestones*, U.S. Department of Energy, Richland Operations Office, U.S. Environmental Protection Agency, and Washington State Department of Ecology, Richland, Washington August 23. Available at: http://pdw.hanford.gov/arpir/index.cfm/viewDoc?accession=1009201523.

RCW 70.105, "Hazardous Waste Management," *Revised Code of Washington*, Olympia, Washington. Available at: http://apps.leg.wa.gov/RCW/default.aspx?cite=70.105.

RCW 70.105.109, "Regulation of Wastes with Radioactive and Hazardous Components."

Resource Conservation and Recovery Act of 1976, 42 USC 6901, et seq. Available at: http://www.epa.gov/epawaste/inforesources/online/index.htm.

RHO-65463-80-126, 1980, "Inconsistencies in 218-W-4B Site Data" (internal letter to G.D. Forehand from W.G. Jasen), Rockwell Hanford Operations, Richland, Washington, December 9. Available at: http://pdw.hanford.gov/arpir/pdf.cfm?accession=0081542H.

RHO-CD-673, 1979, *Handbook 200 Areas Waste Sites*, 3 vols., Rockwell Hanford Operations, Richland, Washington. Available at:
http://pdw.hanford.gov/arpir/index.cfm/viewDoc?accession=D196039027.
http://pdw.hanford.gov/arpir/index.cfm/viewDoc?accession=D196039028.
http://pdw.hanford.gov/arpir/index.cfm/viewDoc?accession=D196039029.

RHO-MA-222, 1987, *Hanford Radioactive Solid Waste Packaging, Storage, and Disposal Requirements*, Rev. 4, Rockwell Hanford Operations, Richland, Washington. Available at: http://pdw.hanford.gov/arpir/index.cfm/viewDoc?accession=0081554H.

WAC 173-303, "Dangerous Waste Regulations," *Washington Administrative Code*, Olympia, Washington. Available at: http://apps.leg.wa.gov/WAC/default.aspx?cite=173-303.

WHC-EP-0225, 1991, *Contact-Handled Transuranic Waste Characterization Based on Existing Records*, Rev. 1, Westinghouse Hanford Company, Richland, Washington. Available at: http://pdw.hanford.gov/arpir/index.cfm/viewDoc?accession=0082354H.

WHC-EP-0063, 1988, *Hanford Radioactive Solid Waste Packaging, Storage, and Disposal Requirements*, Westinghouse Hanford Company, Richland, Washington. Available at: http://pdw.hanford.gov/arpir/index.cfm/viewDoc?accession=D195060573.

WHC-EP-0645, 1995, *Performance Assessment for the Disposal of Low-Level Waste in the 200 West Area Burial Grounds*, Westinghouse Hanford Company, Richland, Washington. Available at: http://www.osti.gov/bridge/servlets/purl/105099-XRRk1W/webviewable/105099.pdf.

WHC-EP-0845, 1995, *Solid Waste Management History of the Hanford Site*, Rev. 0, Westinghouse Hanford Company, Richland, Washington. Available at: http://pdw.hanford.gov/arpir/index.cfm/viewDoc?accession=0091354.

WHC-EP-0912, 1996, *The History of the 200 Area Burial Ground Facilities*, 2 vols., Westinghouse Hanford Company, Richland, Washington. Available at: http://www.osti.gov/scitech/servlets/purl/16778.

Waste Isolation Pilot Plant Land Withdrawal Act, Pub. L. 102-579, as amended by Pub. L. 104-201. Available at:
http://www.wipp.energy.gov/library/cra/baselinetool/Documents/Regulatory%20Tools/10%20WIPPLWA1996.pdf.

This page intentionally left blank.