0059035

Department of Energy
Richland Operations Office
P.O. Box 550
Richland, Washington 99352

03-RCA-0199

APR 10 2003

RECEIVED
APR 16 2003
EDMC

Ms. Laura E. Ruud, Permit Specialist
Nuclear Waste Program
State of Washington
Department of Ecology
1315 W. Fourth Avenue
Kennewick, Washington 99336

Dear Ms. Ruud:

QUARTERLY NOTIFICATION OF CLASS 1 MODIFICATIONS TO THE HANFORD FACILITY RESOURCE CONSERVATION AND RECOVERY ACT (RCRA) PERMIT, DANGEROUS WASTE (DW) PORTION (QUARTER ENDING MARCH 31, 2003–PERMIT CONDITION I.C.3)

In accordance with Condition I.C.3. of the RCRA Permit, DW Portion, enclosed for your notification are the Class 1 modifications. Modifications this quarter include updating information in the Part III of the RCRA Permit, DW Portion. The Part III Class 1 modifications pertain to the 242-A Evaporator, 305-B Storage Facility, and the Waste Treatment and Immobilization Plant. The Class 1 modifications are being made to ensure that all activities conducted are in compliance with the RCRA Permit, DW Portion.

If you have any questions, please contact Anthony C. McKarns, Regulatory Compliance and Analysis Division, on (509) 376-8981.

Joel Hebdon, Director
Regulatory Compliance and Analysis Division
DOE Richland Operations Office

Richard H. Gurske, Director
Environmental Protection
Fluor Hanford

Roby D. Enge, Director
Environment, Safety, Health and Quality
Pacific Northwest National Laboratory

R. F. Naventi
Project Director
Bechtel National, Inc.

RCA:ACM

Enclosure

cc: See page 2

cc w/encls:
F. W. Bond, Ecology (Kennewick)
L. J. Cusack, Ecology
B. G. Erlandson, BNI
R. Gay, CTUIR
A. K. Ikenberry, PNNL
F. C. Jamison, Ecology (Kennewick)
R. Jim, YN
R. J. Landon, BHI
J. E. Rasmussen, ORP
P. Sobotta, NPT
S. A. Thompson, FHI
M. A. Wilson, Ecology
Administrative Record
HF Operating Record, G1-27
Ecology NWP Kennewick Library
Environmental Portal, LMSI

cc w/o encls:
M. Y. Anderson-Moore, Ecology
K. A. Conaway, Ecology (Kennewick)
R. D. Enge, PNNL
R. H. Gurske, FHI

Hanford Facility RCRA Permit Modification Notification Forms
Part III, Chapter 2 and Attachment 18
305-B Storage Facility

Index

Page 2 of 5:	Hanford Facility RCRA Permit, Condition III.2.A
Page 3 of 5:	Chapters 2.0,Section 2.5.1
Page 4 of 5:	Chapter 3.0, Section 3.3.1
Page 5 of 5:	Chapter 3.0, Table 3.1

Hanford Facility RCRA Permit Modification Notification Form

Unit:	Permit Part & Chapter:
305-B Storage Facility	**Part III, Chapter 2 and Attachment 18**

Description of Modification:

Hanford Facility RCRA Permit, Condition III.2.A:

III.2.A. COMPLIANCE WITH APPROVED PERMIT APPLICATION

The Permittees shall comply with all the requirements set forth in Attachment 18, including all Class 1 Modifications specified below, and the Amendments specified in Condition III.2.B. Enforceable portions of the permit application have been incorporated in Attachment 18 and are identified as follows. All subsections, figures, and tables included in these portions are also enforceable, unless stated otherwise:

ATTACHMENT 18:

Chapter 1.0 Part A, Form 3, Permit Application, Revision 1C, from Class 1 Modification for quarter ending September 30, 2002

Chapter 2.0 Unit Description, from Class 1 modification for quarter ending March 31, 2003~~September 30, 2002~~

Chapter 3.0 Waste Analysis Plan, from Class 1 Modification for quarter ending March 31, 2003~~September 30, 2002~~

Chapter 4.0 Process Information, from Class 1 Modification for quarter ending September 30, 2002

Chapter 6.0 Procedures to Prevent Hazards, from Class 1 Modification for quarter ending September 30, 2002

Chapter 7.0 Building Emergency Procedure, from Class 1 Modification for quarter ending September 30, 2002

Chapter 8.0 Personnel Training, from Class 1 Modification for quarter ending September 30, 2002

Chapter 11.0 Closure and Post-Closure Requirements, from Class 1 Modification for quarter ending September 30, 2002

Chapter 12.0 Reporting and Recordkeeping, from Class 1 Modification for quarter ending September 30, 2002

Chapter 13.0 Other Relevant Laws, from Class 1 Modification for quarter ending September 30, 2002

Modification Class: [1 2 3]	Class 1	Class[1]1	Class 2	Class 3
Please check one of the Classes:	X			

Relevant WAC 173-303-830, Appendix I Modification: A.1.

Enter wording of the modification from WAC 173-303-830, Appendix I citation

A. General Permit Provisions

1. Administrative and Informational changes

Submitted by Co-Operator:		Reviewed by RL Program Office:		Reviewed by Ecology:		Reviewed by Ecology:	
Alice Ikenberry	3/12/03	RF Christensen	3/12/03				
A.K. Ikenberry	Date	R.F. Christensen	Date	F. Jamison	Date	L.E. Ruud	Date

[1] Class 1 modifications requiring prior Agency approval.

[2] This is only an advanced notification of an intended Class [1]1, 2, or 3 modification, this should be followed with a formal modification request, and consequently implement the required Public Involvement processes when required.

[3] If the proposed modification does not match any modification listed in WAC 173-303-830 Appendix I, then the proposed modification should automatically be given a Class 3 status. This status may be maintained by the Department of Ecology, or down graded to [1]1, if appropriate.

Hanford Facility RCRA Permit Modification Notification Form

Unit:	Permit Part & Chapter:
305-B Storage Facility	Part III, Chapter 2 and Attachment 18

Description of Modification:

2.5.1 Procedures for Receiving Shipments [B-8a]

The 305B operations staff arranges all shipments into the 305-B Storage Facility. Once approval has been reached through the waste operations staff, transportation will be coordinated by waste operations.

If transportation will be over public roadways or highways, a uniform Hazardous Waste Manifest will be prepared. The shipment will be compared to the manifest upon arrival at the 305-B Storage Facility. If any discrepancies are noted refer to Section 2.5.2. If the shipment is accepted the manifest will be signed, drums counted, and placed into a proper storage location within the facility. The shipment will then be entered into the electronic database noting the date of receipt and storage location. If generated from a non-PNNL facility, a copy of the manifest will be returned to the generating facility within 30-days of receipt at the 305-B Storage Facility. All PNNL copies of the manifest will be kept in the operating record at the 305-B Storage Facility.

~~The following are procedures used prior to transport of wastes to the 305-B Storage Facility. First, the generator must submit a Chemical Disposal/Recycle Request form to the Waste Management Section. An example of a Chemical Disposal/Recycle Request form is shown in Figure 2-5. This request form is then reviewed and either approved or rejected. Typical causes of rejection include missing or insufficient information in any of the data fields, or lack of specific information on waste composition. Waste information required to treat, store, or dispose of the waste is noted in Figure 2-5. Upon approval, the Waste Management Section reviews the form to determine the dangerous waste designation, waste compatibility class for storage, and containerization and labeling requirements.~~

~~The waste is then inspected at the generating unit by the Waste Management Section to verify the information contained on the request form, such as number, sizes, and types of containers, location of waste, etc., and to check for proper containerization of waste. If discrepancies are noted during the inspection, the waste will not be picked up by the Waste Management Section. Typical discrepancies include waste not as described on request form or lack of supporting data to verify waste characteristics. In such cases, deficiencies will be explained to the generating unit responsible person, who will then be responsible for correcting them.~~

~~If the waste is found to be acceptable for transport, Waste Management staff will check to ensure required labels are in place, and transport (or arrange for transport of) the waste to 305-B Storage Facility. If transport will be over public roadways or highways, a Uniform Hazardous Waste Manifest will be prepared identifying PNNL as the transporter and 305-B Storage Facility as the receiving TSD unit. A copy of all such manifests is returned to the generating unit within 30 days of receipt at 305-B Storage Facility. A copy of the manifest is also retained at 305-B Storage Facility.~~

Modification Class: [1 2 3]	Class 1	Class [1]1	Class 2	Class 3
Please check one of the Classes:	X			

Relevant WAC 173-303-830, Appendix I Modification: A.1.

Enter wording of the modification from WAC 173-303-830, Appendix I citation

A. General Permit Provisions
   1. Administrative and Informational changes

Submitted by Co-Operator:	Reviewed by RL Program Office:	Reviewed by Ecology:	Reviewed by Ecology:
3/12/03	RF Christensen 3/12/03		
A.K. Ikenberry Date	R.F. Christensen Date	F. Jamison Date	L.E. Ruud Date

[1] Class 1 modifications requiring prior Agency approval.

[2] This is only an advanced notification of an intended Class [1]1, 2, or 3 modification, this should be followed with a formal modification request, and consequently implement the required Public Involvement processes when required.

[3] If the proposed modification does not match any modification listed in WAC 173-303-830 Appendix I, then the proposed modification should automatically be given a Class 3 status. This status may be maintained by the Department of Ecology, or down graded to [1]1, if appropriate.

Hanford Facility RCRA Permit Modification Notification Form

Unit:	Permit Part & Chapter:
305-B Storage Facility	Part III, Chapter 2 and Attachment 18

Description of Modification:

Chapter 3.0, Section 3.3.1:

3.3.1 Parameter Selection Process

The selection of analytical parameters is based on the State of Washington's "Dangerous Waste Regulations," WAC 173-303-300 and *EPA Waste Analysis at Facilities That Generate, Treat, Store, and Dispose of Hazardous Wastes, A Guidance Manual* (EPA 1994).

At least five percent of the waste containers received at 305-B during a federal fiscal year (October 1 through September 30) will undergo confirmation of designation pursuant to Sections 3.2.2 and 3.2.3. The number of containers needed to meet the five percent requirement is five percent of the average of containers for the previous three months. For example if 200 containers are received in January, 180 in February, and 220 in March, then 10 containers of received waste must undergo confirmation of designation in April. All non-PNNL generating units which ship more than 20 containers through 305-B Storage Facility in a fiscal year will have at least one 1 container sampled and analyzed. Containers, for which there is insufficient process knowledge, or analytical information to designate without sampling and analysis, may not be counted as part of the five percent requirement unless there is additional confirmation of designation independent of the generator designation. The generating unit's staff shall not select the waste containers to be sampled and analyzed other than identifying containers for which insufficient information is available to designate.

Containers of the following are exempt from the confirmation calculation above: Laboratory reagents or other unused products such as paint, lubricants, solvent, or cleaning products, whether received for redistribution, recycling, or as waste. To qualify for this exemption, such materials must be received at 305-B Storage Facility in their original containers.

Prior to acceptance of wastes at 305-B Storage Facility, confirmation of designation may be required (Section 3.7.3). Wastes that shall undergo confirmation of designation are identified in Condition III.2.B.f. of this Permit and may be divided into two groups; those that easily yield a representative sample (Category I), and those that do not (Category II). The steps for each type are outlined below along with a description of which wastes fall into each category:

Category I. If a waste which easily yields a representative sample is received, a representative sample will be taken from the waste containers selected. If more than one phase is present, each phase must be tested individually. The following field tests will be performed as appropriate for the waste stream:

- Reactivity - oxidizer, cyanide, and sulfide tests. These tests will not be performed on materials known to be organic peroxides, ethers, and/or water reactive compounds.
- Flashpoint/explosivity - explosive atmosphere meter[1], or a closed cup flashpoint measurement instrument[1].
- pH - by pH meter[1] or pH paper (SW-846-9041)[2]. This test will not be performed on non- aqueous materials.
- Halogenated organic compounds.
- Volatile organic compounds - by photo or flame ionization tester[1], by gas chromatography with or without mass spectrometry, or by melting point and/or boiling point determination.

Modification Class: [1 2 3]	Class 1	Class[1]1	Class 2	Class 3
Please check one of the Classes:	X			

Relevant WAC 173-303-830, Appendix I Modification: A.1.

Enter wording of the modification from WAC 173-303-830, Appendix I citation

A. General Permit Provisions

1. Administrative and Informational changes

Submitted by Co-Operator:	Reviewed by RL Program Office:	Reviewed by Ecology:	Reviewed by Ecology:
A.K. Ikenberry 3/2/03 Date	R.F. Christensen 3/12/03 Date	F. Jamison Date	L.E. Ruud Date

[1] These instruments are field calibrated or checked for accuracy daily when in use.

[2] The pH paper must have a distinct color change every 0.5 pH units and each batch of paper must be calibrated against certified pH buffers, or by comparison with a pH meter calibrated with certified pH buffers.

[1] Class 1 modifications requiring prior Agency approval.

[2] This is only an advanced notification of an intended Class [1]1, 2, or 3 modification, this should be followed with a formal modification request, and consequently implement the required Public Involvement processes when required.

[3] If the proposed modification does not match any modification listed in WAC 173-303-830 Appendix I, then the proposed modification should automatically be given a Class 3 status. This status may be maintained by the Department of Ecology, or down graded to [1]1, if appropriate.

Hanford Facility RCRA Permit Modification Notification Form

Unit:	Permit Part & Chapter:
305-B Storage Facility	Part III, Chapter 2 and Attachment 18

Description of Modification:

Chapter 3.0, Table 3.1:

Parameter[a]	Method[b]	Rationale for Selection
Physical Screening		
Visual inspection	Field method - observe phases, presence of solids in waste	~~Ensure~~ Confirm that waste matches that described on waste acceptance documentation; identify waste prohibited by LDR requirements related to downstream TSD unit acceptance criteria
Chemical Screening		
Water miscibility/separable organics	Water mix screen ASTM Method D5232-92	~~Ensure~~ Confirm that waste matches that described on waste acceptance documentation; identify separable organics; identify waste prohibited by LDR requirements related to downstream TSD unit acceptance criteria
Water reactivity	Water mix screen ASTM Method D5232-92	~~Ensure~~ Confirm that waste matches that described on waste acceptance documentation; ensure compliance with WAC 173-303-395(1)(b)
pH	pH screen SW-846 Method 9041	~~Ensure~~ Confirm that waste matches that described on waste acceptance documentation; ensure compliance with WAC 173-303-395(1)(b)
Cyanides	Cyanide screen	~~Ensure~~ Confirm that waste matches that described on waste acceptance documentation; ensure compliance with WAC 173-303-395(1)(b)
Sulfides	Sulfide screen	~~Ensure~~ Confirm that waste matches that described on waste acceptance documentation; ensure compliance with WAC 173-303-395(1)(b)
Flashpoint	Photoionizer or Flame Ionizer	Confirm that waste matches that described on waste acceptance documentation
Halogenated Organic Compounds	Photoionizer or Flame Ionizer, or Clor-D-Tect © Kits	Confirm that waste matches that described on waste acceptance documentation
Pre-Shipment Review		
Mercury (total)	Generator knowledge or SW-846 Method 7470/7471	Identify waste prohibited by LDR requirements related to downstream TSD unit acceptance criteria.
Toxicity characteristic organic compounds	Generator knowledge or SW-846 Methods 1311 and 8260 (volatile organic compounds) and 8270 (semivolatile organic compounds)	Identify waste not identified on the Part A, Form 3
Polycyclic aromatic hydrocarbons	Generator knowledge or SW-846 Method 8270 or 8100	Identify waste not identified on the Part A, Form 3 (for waste with >1% solids and for which WP03 could apply)

[a] Addition parameters can be used on current waste acceptance criteria of the downstream TSD unit. Operation limits transfer/shipments are based on current waste acceptance criteria.

[b] Procedures based on EPA SW-846, unless otherwise noted. When regulations require a specific method, the method shall be followed.

Please check one of the Classes:	Class 1	Class[1]1	Class 2	Class 3
	X			

Relevant WAC 173-303-830, Appendix I Modification: A.1.

Enter wording of the modification from WAC 173-303-830, Appendix I citation

A. General Permit Provisions

1. Administrative and Informational changes

Submitted by Co-Operator:	Reviewed by RL Program Office:	Reviewed by Ecology:	Reviewed by Ecology:
3/12/03	RF Christensen 3/12/03		
A.K. Ikenberry Date	R.F. Christensen Date	F. Jamison Date	L.E. Ruud Date

[1] Class 1 modifications requiring prior Agency approval.

[2] This is only an advanced notification of an intended Class [1]1, 2, or 3 modification, this should be followed with a formal modification request, and consequently implement the required Public Involvement processes when required.

[3] If the proposed modification does not match any modification listed in WAC 173-303-830 Appendix I, then the proposed modification should automatically be given a Class 3 status. This status may be maintained by the Department of Ecology, or down graded to [1]1, if appropriate.

Hanford Facility RCRA Permit Modification
Part III, Chapter 2 and Attachment 18
305-B Storage Facility

Replacement Chapters

Index

Chapter 2.0

Chapter 3.0

2.0 CONTENTS

2.0 FACILITY DESCRIPTION AND GENERAL PROVISIONS [B] ..... Att 18.2-1

2.1 The 305-B Storage Facility ..... Att 18.2-1

2.2 TOPOGRAPHIC MAP [B-2] ..... Att 18.2-2
2.2.1 General Requirements [B-2a] ..... Att 18.2-2

2.3 PERFORMANCE STANDARD [B-5] ..... Att 18.2-3
2.3.1 Measures to Prevent Degradation of Groundwater Quality ..... Att 18.2-3
2.3.2 Measures to Prevent Degradation of Air Quality by Open Burning or Other Activities ..... Att 18.2-3
2.3.3 Measures to Prevent Degradation of Surface Water Quality ..... Att 18.2-4
2.3.4 Measures to Prevent Destruction of Impairment of Flora or Fauna Outside of the Facility ..... Att 18.2-4
2.3.5 Measures to Prevent Excessive Noise ..... Att 18.2-4
2.3.6 Measures to Prevent Negative Aesthetic Impacts ..... Att 18.2-4
2.3.7 Measures to Prevent Unstable Hillsides or Soils ..... Att 18.2-4
2.3.8 Measures to Prevent the Use of Processes That Do Not Treat, Detoxify, Recycle, Reclaim, and Recover Waste Material to the Extent Economically Feasible ..... Att 18.2-4
2.3.9 Measures to Prevent Endangerment to the Health of Employees or the Public Near the Facility ..... Att 18.2-5

2.4 BUFFER MONITORING ZONES [B-6] ..... Att 18.2-5
2.4.1 Ignitable or Reactive Waste Buffer Zone [B-6a] ..... Att 18.2-5
2.4.2 Reactive Waste Buffer Zone [B-6b] ..... Att 18.2-5
2.4.3 Travel Time [B-6c] ..... Att 18.2-6
2.4.4 Dangerous Waste Monitoring Zone [B-6d] ..... Att 18.2-6
2.4.5 Extremely Hazardous Waste Monitoring Zone [B-6e] ..... Att 18.2-6

2.5 MANIFEST SYSTEM [B-8] ..... Att 18.2-6
2.5.1 Procedures for Receiving Shipments [B-8a] ..... Att 18.2-7
2.5.2 Response to Significant Discrepancies [B-8b] ..... Att 18.2-7
2.5.3 Provisions for Nonacceptance of Shipment [B-8c] ..... Att 18.2-8
2.5.4 Unmanifested Waste ..... Att 18.2-8

FIGURES

Figure 2-1. Location of 305-B Storage Facility ..... Att 18.2-3
Figure 2-2. 305-B Storage Facility Floor Plan ..... Att 18.2-10
Figure 2-3. Wind Roses for the Hanford Site ..... Att 18.2-11
Figure 2-4. Sample Uniform Hazardous Waste Manifest Form ..... Att 18.2-12
Figure 2-5. Example Disposal Request Form ..... Att 18.2-13

This page intentionally left blank.

2.0 FACILITY DESCRIPTION AND GENERAL PROVISIONS

This chapter briefly describes the Hanford Site and provides a general overview of the 305-B Storage Facility, including:

- Topography
- Location information
- Traffic information
- Performance standards
- Buffer monitoring zones
- Spills and discharges
- Manifest system.

2.1 The 305-B Storage Facility

The 305-B Storage Facility is a dangerous waste and RMW storage unit owned and operated by DOE and co-operated by PNNL. The unit is used for the collection, consolidation, packaging, storage, and preparation for transport and disposal of both dangerous waste and RMW. It is an integral part of the Hanford Site's waste management system.

The 305-B Storage Facility is a one-story frame and masonry building with basement constructed in the early 1950s, with an attached two-story-high metal and concrete building constructed in January 1978, referred to in this document as the "high bay." The unit is located within the 300 Area, as shown in Figure 2-1, and was formerly used for engineering research and development. Unit upgrades were completed in 1988 to meet requirements for storage of dangerous waste and RMW. Waste storage under interim status began in March 1989.

A variety of small volume chemical wastes are generated by PNNL's research laboratory activities under contract to DOE. These wastes are brought to the 305-B Storage Facility and segregated by compatibility for storage in the unit until enough waste is accumulated to fill a labpack or bulking container, usually a 30- to 55-gallon drum. When a sufficient number of shipping containers of waste have accumulated, they are manifested for shipment, generally to permitted off-site recycling, treatment or disposal facilities.

Dangerous wastes are stored in the high bay. The high bay has been equipped with a secondary containment system to facilitate storage of containerized wastes. In addition, four storage "cells" have been constructed within the high bay area for segregated storage of incompatible waste streams. Each of the cells is approximately 14' x 14', enclosed by 4' high concrete block walls; each cell has its own separate secondary containment system. Drum-quantity storage for incompatible wastes has also been provided in separate areas of the high bay.

Radioactive mixed waste (RMW) is stored in the basement of the original wing of the building in an area approximately 18' x 32'. The RMW area is also equipped with a secondary containment berm to prevent migration of spilled wastes. Flammable RMW cannot be stored below grade (per Uniform Fire Code) and is stored in an independent area on the first floor of the original wing in individual secondary containment structures.

The 305-B Storage Facility is equipped with a heating, ventilation and air conditioning (HVAC) system to provide relatively constant temperatures during storage of dangerous wastes. The first floor of the

older building and the high bay are served by a dual-compressor heat pump system for both heating and air conditioning. The basement area is served by a separate electric heating and evaporative cooling combined system. These systems are adequate to maintain interior temperatures in the range of 50-85°F during normal ambient temperatures of 10-110°F.

In addition, the unit utilizes a local exhaust system for "bulking" as described in Attachment 18, Chapter 4.0, Section 4.1.1.2. This system is located in the flammable liquid bulking module. Local exhaust of 3300 CFM is provided during bulking operations. Another, smaller ventilation system, referred to as the "elephant trunk ventilation system," is located in the high bay storage cell areas for occasional bulking of solids or nonflammable liquids not requiring use of the flammable liquid bulking module. This system has a ventilation capacity of 1550 CFM. A smaller, laboratory-style fume hood has also been installed on the south wall of the high bay for compatibility testing and small-volume waste work.

A simplified building layout is shown in Figure 2-2. Individual storage cells are described in Attachment 18, Chapter 4.0, Section 4.1.

2.2 TOPOGRAPHIC MAP [B-2]

Topographic maps of the Hanford Site and 300 Area are listed below.

Drawing No.	Sheet	Title
H-13-958	1 of 1	General Overview of Hanford Site
H-13-000300	1 of 1	300 Area Topographic Map
H-13-000301	1 of 1	300 Area Topographic Map
H-13-000302	1 of 1	300 Area Topographic Map
H-13-000303	1 of 1	300 Area Topographic Map
H-13-000304	1 of 1	300 Area Topographic Map
H-13-000305	1 of 1	300 Area Topographic Map
H-13-000306	1 of 1	300 Area Topographic Map
H-13-000307	1 of 1	300 Area Topographic Map
H-13-000308	1 of 1	300 Area Topographic Map

2.2.1 General Requirements [B-2a]

H-13-958 is a general overview map of the Hanford Site property and the surrounding countryside. This figure is intended as a location map and illustrates the following:

- The facility boundary of the Hanford Site
- Surrounding land use including the Saddle Mountain National Wildlife Refuge and the State Game Reserve to the north, the City of Richland to the south, Rattlesnake Mountain Arid Lands Ecology (ALE) Reserve located to the west, and farmlands or Game Reserves to the east
- Contours sufficient to show surface water flow
- Fire control facilities located on the Hanford Site
- Locations of access roads, internal roads, railroads, and perimeter gates and barricades
- Latitudes and longitudes.

Detailed representation of the Hanford 300 Area where the 305-B Storage Facility is located. These maps provide a detailed profile of the unit and a distance of 1,000 ft around it at a scale noted on the drawings. Contour intervals are shown at every foot, and provide sufficient detail of surface waters and flow, access control, buildings, structures, fire control facilities, etc., to meet the requirements of WAC 173-303-806(4)(a)(xviii) (Ecology 1989).

Figure 2-3 illustrates wind roses for various locations on the Hanford Site. Winds are predominately from the west.

2.3 PERFORMANCE STANDARD [B-5]

The 305-B Storage Facility was designed to minimize the exposure of personnel to dangerous wastes and hazardous substances and to prevent dangerous wastes and hazardous substances from reaching the environment.

In addition, measures are taken to ensure that 305-B Storage Facility is maintained and operated, to the maximum extent practicable given the limits of technology, in a manner that prevents:

- Degradation of groundwater quality
- Degradation of air quality by open burning or other activities
- Degradation of surface water quality
- Destruction or impairment of flora or fauna outside of the facility
- Excessive noise
- Negative aesthetic impacts
- Unstable hillsides or soils
- Use of processes that do not treat, detoxify, recycle, reclaim, and recover waste material to the extent economically feasible
- Endangerment to the health of employees or the public near the facility.

The measures taken to prevent each of the above negative effects from occurring are described in the following sections.

2.3.1 Measures to Prevent Degradation of Groundwater Quality

Degradation of groundwater quality is prevented by storing waste containers within an enclosed building with a sealed concrete floor. All drains and sumps in areas where wastes are stored are blocked to prevent release of spilled material to the environment. The 305-B Storage Facility accepts only those packages meeting applicable DOT requirements. Opening of containers is done only in areas with spill containment. Design and administrative controls significantly reduce the possibility of release of dangerous waste to the environment through soil or groundwater contamination.

2.3.2 Measures to Prevent Degradation of Air Quality by Open Burning or Other Activities

No open burning occurs at 305-B Storage Facility. There is no vegetation around 305-B Storage Facility and the area around the facility is paved or graveled, thereby reducing the risk of fire or wind erosion. Combustible and flammable waste is packaged in a manner that reduces the potential for fire.

2.3.3 Measures to Prevent Degradation of Surface Water Quality

The potential for degradation of surface water quality is extremely low, due to the manner in which the facility is designed and operated. All waste handling activities (i.e., loading/unloading, container opening, waste transfer) presenting the opportunity for spills are conducted inside the unit. All exits from storage areas of 305-B Storage Facility are equipped with spill collection sumps to prevent spilled material from escaping.

2.3.4 Measures to Prevent Destruction of Impairment of Flora or Fauna Outside of the Facility

305-B Storage Facility is located within the 300 Area. The 300 Area is highly developed and areas not occupied by buildings are generally paved or graveled. As a result, flora or fauna are generally absent within the 300 Area except for several grassed areas. Measures to prevent destruction or impairment of flora or fauna outside the 300 Area are the same as those to prevent releases from the unit (i.e., all waste handling is performed within an enclosed area having spill collection sumps).

2.3.5 Measures to Prevent Excessive Noise

During normal operations at 305-B Storage Facility excessive noise is not generated. The major sources of noise are waste transport and handling equipment (i.e., forklifts, light vehicles). The noise generated at 305-B Storage Facility is compatible with the types of activities generated at neighboring facilities in the 300 Area.

2.3.6 Measures to Prevent Negative Aesthetic Impacts

305-B Storage Facility does not injure or destroy the surrounding flora and fauna. The facility stores waste in approved DOT containers within the confines of the structure. The building's appearance is similar to neighboring facilities. For these reasons, the facility presents no negative aesthetic impacts.

2.3.7 Measures to Prevent Unstable Hillsides or Soils

There are no naturally unstable hillsides near 305-B Storage Facility. The soil beneath and around the facility was compacted prior to construction.

2.3.8 Measures to Prevent the Use of Processes That Do Not Treat, Detoxify, Recycle, Reclaim, and Recover Waste Material to the Extent Economically Feasible

The 305-B Storage Facility was established, in part, to enhance DOE's and PNNL's efforts to eliminate or minimize dangerous waste generation, and to treat, detoxify, recycle, reclaim and recover waste materials.

Offsite waste management options for dangerous wastes being shipped from the 305-B Storage Facility are evaluated according to the following order of preference:

1. Recycling, including solvent reprocessing, oil recycling, metals recovery, burning for energy recovery, etc.
2. Treatment, including incineration, volume and/or toxicity reduction, chemical destruction, etc.
3. Land disposal is viewed as least favored option and is generally only used for treatment residues, spill cleanup residues, or when treatment is not feasible.

When permitted by law and/or contractual obligations, 305-B Storage Facility staff tries to use this hierarchy without regard to minor variations in cost, e.g., if recycling is available but slightly more expensive than land disposal, recycling is utilized.

2.3.9 Measures to Prevent Endangerment to the Health of Employees or the Public Near the Facility

305-B Storage Facility is within the 300 Area, which is located approximately 1 mile north of the corporate limits of the City of Richland. Public entry to the 300 Area is not allowed; members of the public, therefore, cannot enter 305-B Storage Facility. Exposure of members of the public or employees to dangerous and mixed waste constituents is prevented through administrative controls over the designation, packaging, loading, transporting, and storing of the wastes received at 305-B Storage Facility. In addition, physical controls exist (i.e., spill collection sumps) to prevent release of wastes or waste constituents in the event of a spill.

Employees are trained to handle and store waste packages (Attachment 18, Chapter 8.0). The training includes dangerous waste awareness, emergency response, and workplace safety. Protective equipment, safety data, and hazardous materials information are supplied by operations management and are readily available for employee use.

A contingency plan, including emergency response procedures, is in place and is implemented for spill prevention, containment, and countermeasures to reduce safety and health hazards to employees, the environment, and the public. The contingency plan is described in Attachment 18, Chapter 7.0.

2.4 BUFFER MONITORING ZONES [B-6]

Buffer and monitoring zones around 305-B Storage Facility are described in the following sections.

2.4.1 Ignitable or Reactive Waste Buffer Zone [B-6a]\

Ignitable and reactive wastes are stored in 305-B Storage Facility in compliance with the requirements of the 1988 Uniform Fire Code, Article 79, Division II (International Conference of Building Officials 1991). Quantity limits for storage are established to comply with requirements for Class B occupancy. Structures surrounding 305-B Storage Facility are laboratory and office buildings, which are occupied during normal working hours. The nearest adjacent facility is the 314 Building, which is approximately 30 ft south of 305-B Storage Facility. The closest 300 Area boundary is the western boundary, which is approximately 250 ft west of 305-B Storage Facility.

2.4.2 Reactive Waste Buffer Zone [B-6b]

Storage of certain reactive wastes listed in WAC 173-303-630(8)(a) is done at 305-B Storage Facility. These wastes have special storage requirements more stringent than those shown in Section 2.4.1. They are stored in accordance with this section and with the Uniform Building Code's Table 77.201, latest edition. The 1988 edition requires buffer zones in Class B occupancies of 44 inches for storage of such wastes, and the storage locations in 305-B Storage Facility reflecting appropriate buffer zones are noted in Attachment 18, Chapter 4.0, Figure 4-1. These wastes are only occasionally stored at the unit depending on generation by individual research projects.

The occupancy storage limitations imposed by UBC for class B occupancy are as follows:

- Explosives: 1 lb
- Organic Peroxide, unclassified, detonatable: 1 lb
- Pyrophoric: 4 lbs
- Unstable (reactive), Class 4: 1 lb

These limits are allowed to be doubled when stored in flammable storage cabinets, as is done at 305-B Storage Facility; hence, the practical storage limits at 305-B Storage Facility are double those shown here.

2.4.3 Travel Time [B-6c]

Operation of 305-B Storage Facility does not involve the placement of waste in dangerous waste surface impoundments, piles, landfarms, or landfills. Therefore, the requirement that the travel time from the active portion of the unit to the nearest downstream well or surface water used for drinking purposes be at least three years for dangerous waste and 10 years for extremely hazardous waste does not apply.

2.4.4 Dangerous Waste Monitoring Zone [B-6d]

Operation of 305-B Storage Facility does not involve the placement of waste in dangerous waste surface impoundments, waste piles, land treatment, or landfill areas. Therefore, a dangerous waste monitoring zone is not required.

2.4.5 Extremely Hazardous Waste Monitoring Zone [B-6e]

Operation of the 305-B Storage Facility does not involve the placement of waste in dangerous waste surface impoundments, waste piles, land treatment, or landfill areas. Therefore, an extremely hazardous waste monitoring zone is not required.

2.5 MANIFEST SYSTEM [B-8]

The Hanford Site has one EPA/state identification number, as required by WAC 173-303-060, and all TSD units on the Hanford Site (such as 305-B Storage Facility) are considered to be part of one dangerous waste facility. Therefore, onsite shipments of dangerous or mixed waste are not subject to the manifesting requirements specified in WAC 173-303-370 and -180. 305-B Storage Facility has an onsite waste tracking system akin to a manifest system, which is voluntarily used for transporting waste on the Hanford Facility.

An example of a Uniform Hazardous Waste Manifest (Figure 2-4) is used for all off-site shipments of dangerous waste and RMW received at 305-B Storage Facility, as well as for all off-site shipments of dangerous waste and RMW from 305-B Storage Facility. In addition to the Uniform Hazardous Waste Manifest, wastes subject to land disposal restrictions which are shipped from 305-B Storage Facility to off-site treatment, storage, or disposal facilities are accompanied by the applicable notifications and certifications required under 40 CFR 268 (EPA 1989).

The following sections provide information on receiving shipments, response to manifest discrepancies, and provisions for nonacceptance of shipments.

2.5.1 Procedures for Receiving Shipments [B-8a]

The 305B operations staff arranges all shipments into the 305-B Storage Facility. Once approval has been reached through the waste operations staff, transportation will be coordinated by waste operations.

If transportation will be over public roadways or highways, a uniform Hazardous Waste Manifest will be prepared. The shipment will be compared to the manifest upon arrival at the 305-B Storage Facility. If any discrepancies are noted refer to Section 2.5.2. If the shipment is accepted the manifest will be signed, drums counted, and placed into a proper storage location within the facility. The shipment will then be entered into the electronic database noting the date of receipt and storage location. If generated from a non-PNNL facility, a copy of the manifest will be returned to the generating facility within 30-days of receipt at the 305-B Storage Facility. All PNNL copies of the manifest will be kept in the operating record at the 305-B Storage Facility.

2.5.2 Response to Significant Discrepancies [B-8b]

Waste shipments received at the 305-B Storage Facility containing manifest discrepancies are not accepted unless the discrepancy or discrepancies can be resolved with the generating unit at the time the shipment is received. Manifest discrepancies requiring such resolution include:

- Variations exceeding 10% in weight for bulk shipments such as tank trucks or tank cars (generally not applicable to 305-B Storage Facility since most shipments are in drums or other containers);
- Any inaccuracy in piece counts in containerized shipments (underages or overages);
- Type mismatches (i.e., the waste is not as described on the request form; obvious inaccuracies such as waste acid substituted for waste solvent).

Manifest information will also be considered incorrect if the written description of wastes does not agree with visual observations, or if observed weights or volumes differ by more than 10 % from those described on the manifest.

If a discrepancy is noted, the generating unit will be contacted immediately. The waste will not be accepted for storage until the discrepancy is resolved. The generating unit will be asked to identify the source of the discrepancy (e.g., error in estimating volume or weight, incorrect identification of waste, etc.) Once the cause of the discrepancy is identified, and the generating unit and the waste management organization have concurred as to resolution of the discrepancy, the manifest will be corrected. Corrections will be made by drawing a single line through the incorrect entry and entering the correct information. Corrected entries will be initialed and dated by the individual making the correction. Once the manifest has been corrected, the discrepancy will be considered resolved.

Certain manifest discrepancies may be discovered after receipt, such as analytical data indicating incorrect designation, which may result in incorrect naming of the shipment on the manifest. Such discrepancies will be managed as noted above; if, however, the discrepancy cannot be resolved within 15 days of receipt of the shipment, the 305-B Storage Facility will file the report required by WAC 173-303-370(4)(b) as described in Attachment 18, Chapter 12.0, Section 12.4.1.1.1.

2.5.3 Provisions for Nonacceptance of Shipment [B-8c]

Provisions for nonacceptance of shipments are discussed in the following sections.

2.5.3.1 Nonacceptance of Undamaged Shipment [B-8c(1)].

As described in Section 2.8.1, all wastes are inspected by staff from the waste management organization prior to shipment and are also transported to 305-B Storage Facility by waste management organization staff. This procedure is designed to prevent receipt of nonacceptable wastes. Waste management organization staff will refuse to accept or transport wastes, which are nonacceptable at 305-B Storage Facility.

2.5.3.2 Activation of BEP/Contingency Plan for Damaged Shipment [B-8c(2)].

As described in Section 2.5.1, all wastes are inspected by staff from the waste management organization prior to shipment and are also primarily transported to 305-B Storage Facility by waste management organization staff. Damaged containers will not be accepted from the generator and will not be transported. The only opportunity for receipt of damaged containers, therefore, would be if containers were damaged during transportation. If a shipment of waste is damaged during transportation and arrives in a condition as to present a hazard to public health or to the environment, the facility BEP/contingency plan will be implemented as described in Attachment 18, Chapter 7.0.

2.5.4 Unmanifested Waste

Waste generated within the Hanford Site is not transported over public highways and is not subject to manifest requirements under WAC 173-303. Such waste may be received at the 305-B Storage Facility without a manifest. However, all wastes (including unmanifested waste) must be accompanied by a completed and approved Disposal Request form (Figure 2-5).

If transport is by public roadways or highways, a manifest must be used as noted in Section 2.5. Shipments requiring a manifest and not having one will either be rejected or, at the sole discretion of the unit operator, the unit will accept the waste and file an unmanifested waste report as described in WAC 173-303-390(1) and detailed in Attachment 18, Chapter 12.0.

1

Figure 2-1. Location of 305-B Storage Facility

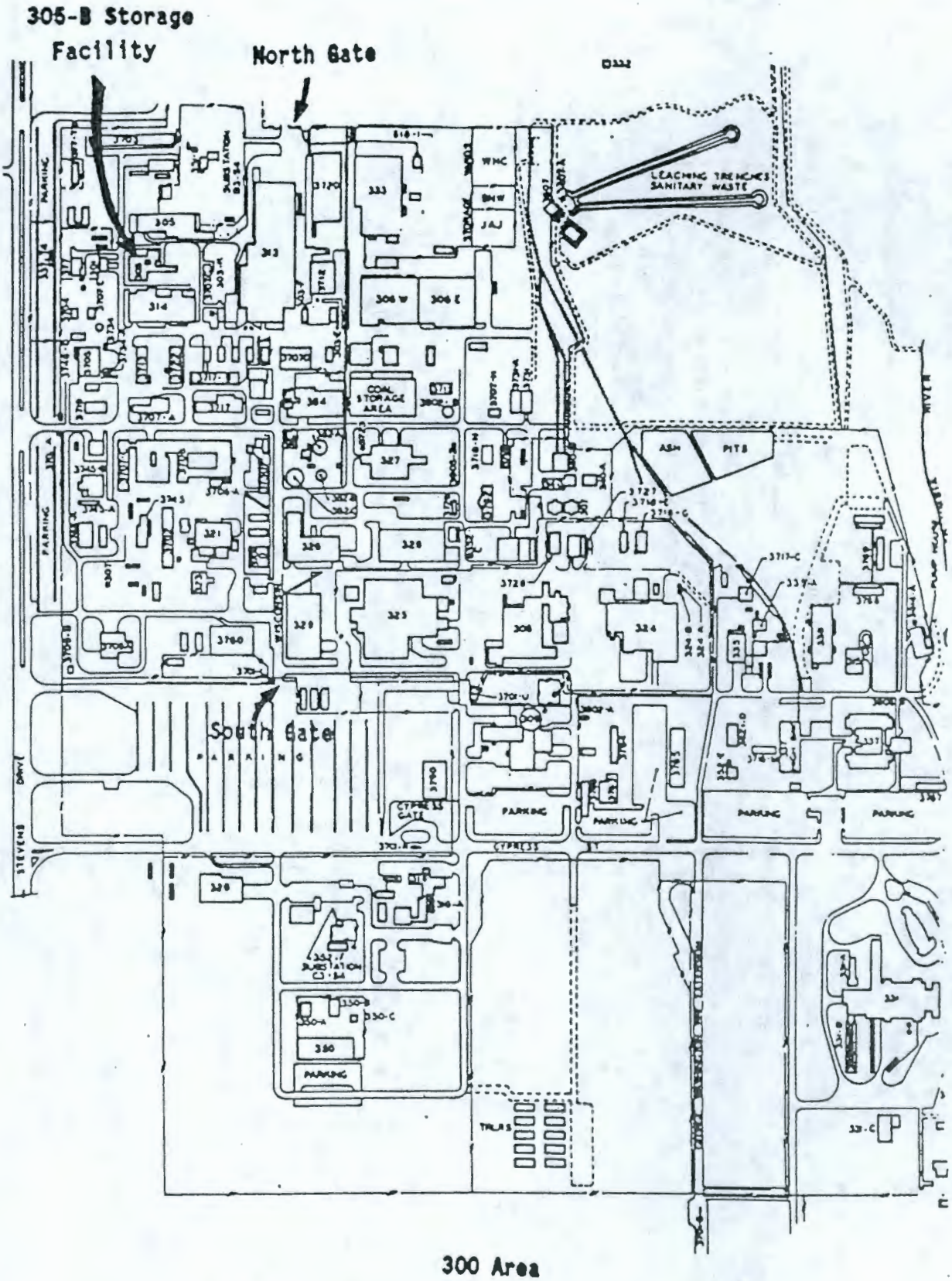

Figure 2-2. 305-B Storage Facility Floor Plan

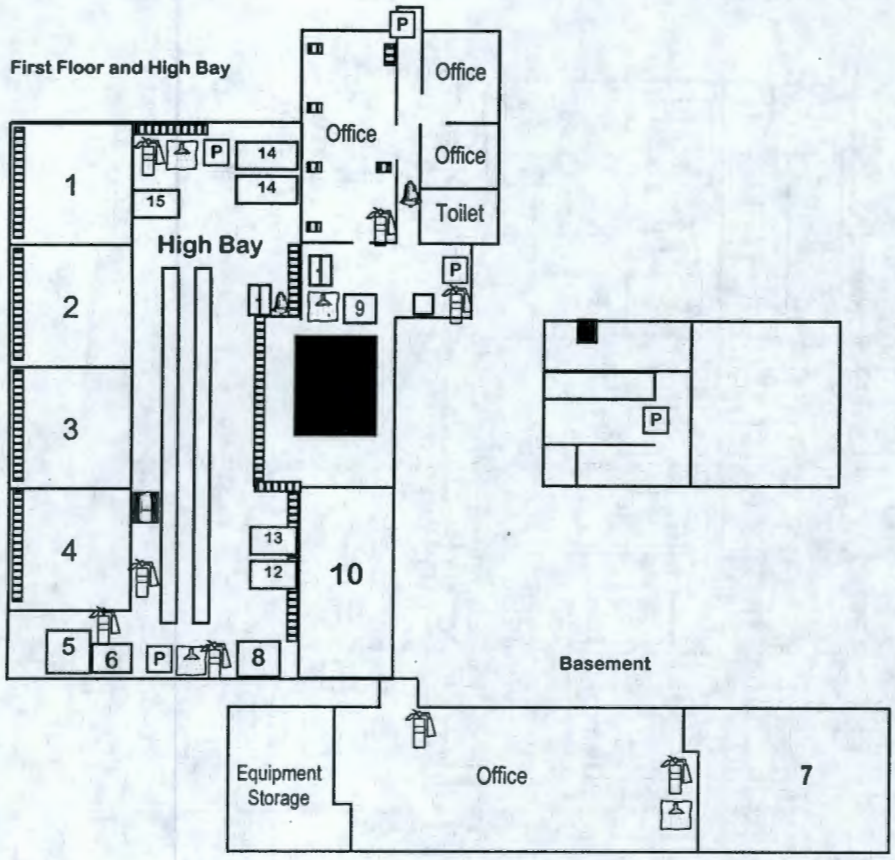

Legend

1. Acids, Oxidizers
2. Poisons, Class 9
3. Alkaline, WSDW, Organic Peroxides
4. Organics and Compressed Aerosols
5. Flammable Liquid Bulking and compressed gases
6. Asbestos Cabinet
7. RMW Storage Cell
8. Flammable Storage
9. Small Quantity Flammable RMW
10. Outdoor Non-regulated Drum Storage
11. WSDW Non-flammable Drums
12. Universal and Recycling Storage
13. Acid Drums
14. Alkaline Drums
15. Explosive Magazine

Safety Shower/Eyewash
Phone
Fire Alarm Bell
Fire Alarm Pull Box
10-Lb. ABC Fire Extinguisher
15 Lb. Or larger Class D Fire Extinguisher
Removable Access to Basement
Emergency Equipment Cabinet
Collection Sump

Figure 2-3. Wind Roses for the Hanford Site

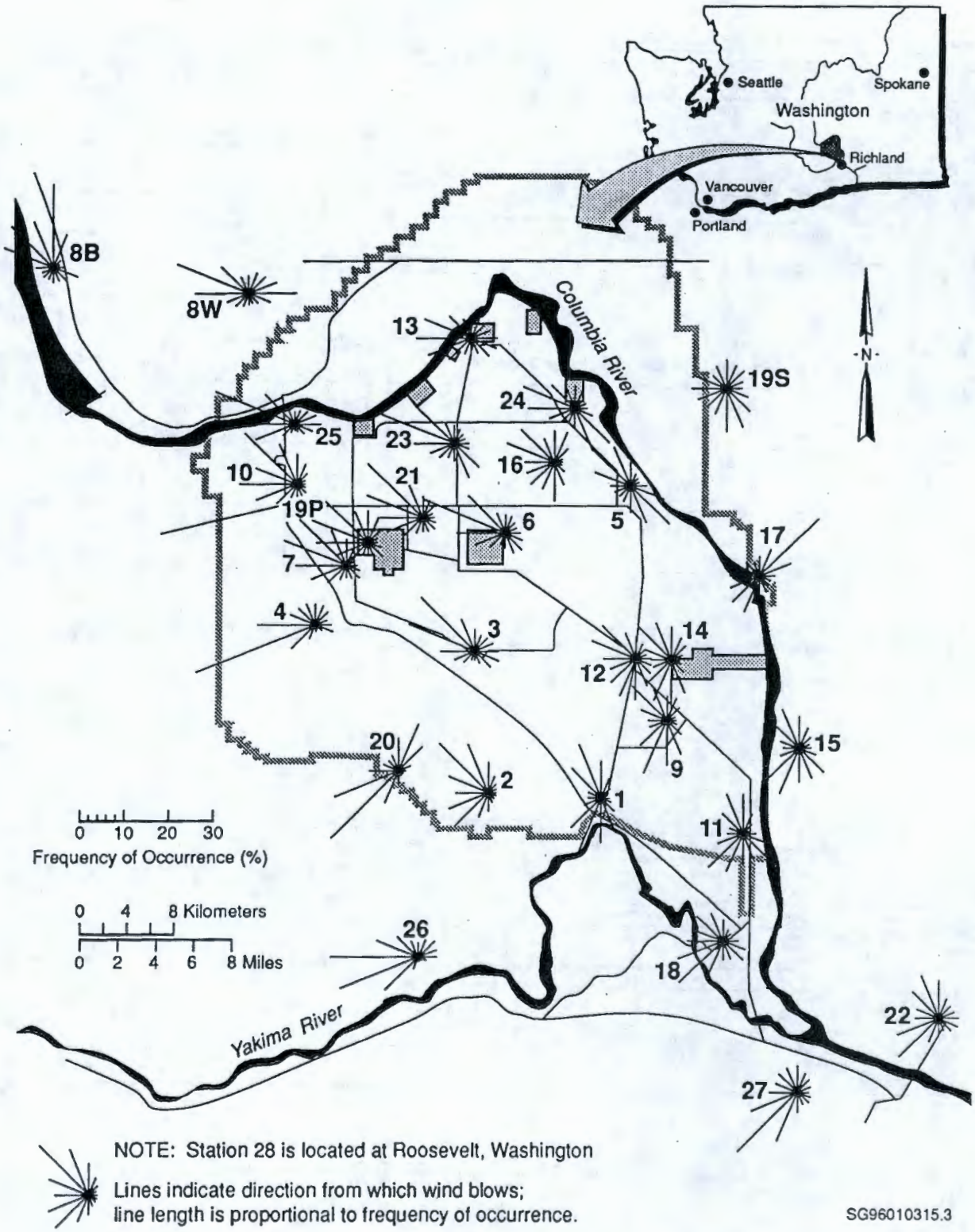

1 Figure 2-4. Sample Uniform Hazardous Waste Manifest Form

Please print or type. (Form designed for use on elite (12-pitch) typewriter.)

Form Approved. OMB No. 2050-0039.

UNIFORM HAZARDOUS WASTE MANIFEST

1. Generator's US EPA ID No | Manifest Document No.

2. Page 1 of

Information in the shaded areas is not required by Federal law.

3. Generator's Name and Mailing Address

4. Generator's Phone ( )

A. State Manifest Document Number

B. State Generator's ID

5. Transporter 1 Company Name | 6. US EPA ID Number

C. State Transporter's ID

D. Transporter's Phone

7. Transporter 2 Company Name | 8. US EPA ID Number

E. State Transporter's ID

F. Transporter's Phone

9. Designated Facility Name and Site Address | 10. US EPA ID Number

G. State Facility's ID

H. Facility's Phone

11. US DOT Description (Including Proper Shipping Name, Hazard Class and ID Number)	HM	12. Containers No.	Type	13. Total Quantity	14. Unit Wt/Vol	I. Waste No.
a.						
b.						
c.						
d.						

J. Additional Descriptions for Materials Listed Above

K. Handling Codes for Wastes Listed Above

15. Special Handling Instructions and Additional Information

16. **GENERATOR'S CERTIFICATION:** I hereby declare that the contents of this consignment are fully and accurately described above by proper shipping name and are classified, packed, marked, and labeled and are in all respects in proper condition for transport by highway according to applicable international and national government regulations

If I am a large quantity generator, I certify that I have a program in place to reduce the volume and toxicity of waste generated to the degree I have determined to be economically practicable and that I have selected the practicable method of treatment, storage or disposal currently available to me which minimizes the present and future threat to human health and the environment; OR, if I am a small quantity generator, I have made a good faith effort to minimize my waste generation and select the best waste management method that is available to me and that I can afford

Printed/Typed Name | Signature | Month Day Year

GENERATOR

17. Transporter 1 Acknowledgement of Receipt of Materials

Printed/Typed Name | Signature | Month Day Year

18. Transporter 2 Acknowledgement of Receipt of Materials

Printed/Typed Name | Signature | Month Day Year

TRANSPORTER

19. Discrepancy Indication Space

20. Facility Owner or Operator: Certification of receipt of hazardous materials covered by this manifest except as noted in Item 19.

Printed/Typed Name | Signature | Month Day Year

FACILITY

Style F15 Labelmaster, An American Labelmark Co., Chicago, IL 60646 (800) 621-5808

EPA Form 8700-22 (Rev. 9-88) Previous editions are obsolete

PRINTED ON RECYCLED PAPER USING SOYBEAN INK

PRINTED WITH SOY INK

ORIGINAL-RETURN TO GENERATOR

1

Figure 2-5. Example Disposal Request Form

Battelle PNNL — WASTE DISPOSAL REQUEST — Page 1

WM Req No: IRM Req No:	1830 1831 BCO	Org Code:		Generator/Phone No. Office Room No.
Date Released:				
Received:	Type of Accumulation	Accum. Start Date for 90 Day Waste; 30 days for PCBs		Building where waste is located:
Approved:				
Designated:				
Entered:	Type of Material		Requested by: Phone No. Office Room No.	Mail Stop (MSIN):
Picked Up/Labeled				

Container ID/ User No/Rm.No	Container Size	Container Type	Weight	Material Description or Trade Name	Chemical Component	Phys. State	Status/ Source	DOT Loc	Designat-ion	WDOE Codes	EPA Codes

1 Figure 2-8. Example Disposal Request Form (Reverse)

Chemical Disposal/Recycle Request (CDRR) Instructions

General Instructions:

- Type or print neatly, fill out ALL blanks correctly and completely.
- Do not write in shaded areas. These are for WM&EC use only.
- A work package number needs to be included for all 1831 (private) waste and as requested for other special cases (e.g., compressed gas cylinders, lecture bottles, etc.).
- Do not fill in an accumulation date if the waste is in a satellite accumulation area.
- Do not include both satellite accumulation wastes and, 90 day wastes on the same CDRR form. Use separate forms.
- Do not include both 1830 and 1831 wastes on the same CDRR form.
- Do not include both nonradioactive chemical wastes and radioactive mixed waste on the same CDRR form.
- Do not include both 300 and 3000 Areas wastes on the same CDRR form.
- For any materials analyzed, please attach a copy of the analytical report.
- Please feel free to use several lines per item as necessary to include any important information on the material.

Specific CDRR Instructions:

(a) Provide a complete description of the material for disposal. For trade name items, attach a material safety data sheet (MSDS). For items analyzed, attach a copy of the analysis. Also include any additional information on material or process if any (e.g., CAS number, RTEC number.)

(b) Provide all known chemical components; use proper accepted names (e.g., ethyl acohol is acceptable; abbreviations or formulas are not).

(c) Enter weight percent for all known chemical components; this must add up to 100% for each item, unless the information is proprietary (as indicated on an attached MSDS). Trace amounts of metals, cyanides, sulfides, PCBs, phenolics, and other highly toxic materials must be specified.

(d) Please indicate physical state of material: S=Solid, L=Liquid, G=Gas.

(e) Please enter hazards from codes shown below; also, for corrosive material include the pH, for flammable materials include the flashpoint (FP).

Hazard Codes

C=Corrosive	T=Toxic	E=Explosive
EP= EP Toxic	O=Oxidizer	F=Flammable
R=Reactive (with water or air)		

(f) Please enter container/material from codes shown below (state all that apply):

F= Full	MT=empty	TR= triple rinsed	O= old
N= new (unused material)		S= spill material	PF= partially full

R= recyclable condition (unopened, or opened but in excellent condition)

Requirements for Material Pickup by WM&EC:

In order to facilitate material pickup by WM&EC, please do the following:

- Complete ALL required information on the CDRR form.
- Ensure that all materials are in screw-cap glass, metal, or plastic containers that are compatible with the waste (sealed containers which the material originally came in are acceptable, (e.g., glass ampules or metal paint cans). Ground glass, rubber stoppers, or taped seals will not be accepted.
- Have a chemical waste certification filled out and signed by a PNL Radiation Protection Technologist showing that the material has been surveyed and released (1 to 2 days prior to scheduled pickup).
- Each individual container must have marking or labeling on them that clearly identify 100% of their contents and their chemical hazards (if container is too small to label with all constituents please attach a tag or other listing).
- If you have questions, please refer to PNL-MA-8, "Waste management and Environmental Compliance". For hazardous waste issues and PNL-MA-43, "Health and Safety Management," for chemical hazard labeling requirements.

CONTENTS

3.0 WASTE ANALYSIS ..... Att 18.3-3

3.1 CHEMICAL, BIOLOGICAL, AND PHYSICAL ANALYSIS ..... Att 18.3-3
3.1.1 Containerized Waste ..... Att 18.3-5
3.1.2 Waste in Tank Systems ..... Att 18.3-5
3.1.3 Waste in Piles ..... Att 18.3-5
3.1.4 Landfill Waste ..... Att 18.3-5
3.1.5 Waste Incinerated and Waste Used in Performance Tests ..... Att 18.3-5
3.1.6 Waste to be Land Treated ..... Att 18.3-5

3.2 WASTE ANALYSIS PLAN ..... Att 18.3-5
3.2.1 Facility Description ..... Att 18.3-6
3.2.2 Description of Facility Processes and Activities ..... Att 18.3-6
3.2.3 Identification/EPA Classification and Quantities of Hazardous Wastes Managed Within the 305-B Storage Facility ..... Att 18.3-10
3.2.4 Description of Hazardous Waste Management Units ..... Att 18.3-10

3.3 SELECTING WASTE ANALYSIS PARAMETERS ..... Att 18.3-10
3.3.1 Parameter Selection Process ..... Att 18.3-11
3.3.2 Criteria and Rational for Parameter Selection ..... Att 18.3-12
3.3.3 Special Parameter Selection Requirements ..... Att 18.3-13

3.4 SELECTING SAMPLING PROCEDURES ..... Att 18.3-13
3.4.1 Sampling Strategies and Equipment ..... Att 18.3-13
3.4.2 Sampling Preservation and Storage ..... Att 18.3-14
3.4.3 Sampling QA/QC Procedures ..... Att 18.3-14
3.4.4 Health and Safety Protocols ..... Att 18.3-18

3.5 SELECTING A LABORATORY, AND LABORATORY TESTING AND ANALYTICAL METHODS ..... Att 18.3-18
3.5.1 Selecting a Laboratory ..... Att 18.3-18
3.5.2 Selecting Testing and Analytical Methods ..... Att 18.3-19

3.6 SELECTING WASTE RE-EVALUATION FREQUENCIES ..... Att 18.3-19

3.7 SPECIAL PROCEDURAL REQUIREMENTS ..... Att 18.3-20
3.7.1 Procedures for Receiving Waste From off-site Generators ..... Att 18.3-20
3.7.2 Procedures for Ignitable, Reactive, and Incompatible Wastes ..... Att 18.3-21
3.7.3 Procedures To Ensure Compliance With LDR Requirements ..... Att 18.3-22

TABLES

Table 3-1. Summary of Test Parameters, Rationales, and Methods ..... Att 18.3-24

This page intentionally left blank.

3.0 WASTE ANALYSIS [C]

The purpose of this Waste Analysis Plan (WAP) is to document the waste acceptance process, sampling methodologies, analytical techniques, and processes that are undertaken for sampling and analysis of dangerous and or mixed waste managed in the 305-B Storage Facility.

This chapter also provides information on the chemical, biological, and physical characteristics of the waste stored at the 305-B Storage Facility.

3.1 CHEMICAL, BIOLOGICAL, AND PHYSICAL ANALYSIS

The dangerous waste and RMW stored at 305-B Storage Facility can be categorized as originating from five basic sources:

- Listed Waste from specific and nonspecific sources
- Discarded commercial chemical products
- Waste from research activities using radioactive isotopes
- Waste from chemicals synthesized or created in research laboratories
- Discarded commercial products exhibiting dangerous waste characteristics and/or criteria.

Each of these waste categories is discussed below, including waste descriptions, hazard characteristics, and bases for hazard designations. This information includes that which must be known to treat, store, or dispose of the waste, as required under WAC 173-303-806(4)(a)(ii).

Listed Waste from Specific and Nonspecific Sources. Wastes from specific and nonspecific sources consist of those listed wastes identified in WAC 173-303-9904. Attachment 18, Chapter 1.0, Part A, Form 3, identifies the waste from this category with their estimated annual management quantities.

Halogenated and nonhalogenated solvents are in the form of spent solvents. Degreasing solvents (F001), as well as spent halogenated solvents (F002), are used primarily in research although some commercial applications do exist (e.g., printing, duplicating). Spent non-halogenated solvents (F003, F004, and F005) also come primarily from research laboratories, although some is generated through maintenance applications. Manufacturing activities are not performed at Hanford; therefore, dangerous waste from specific sources (WAC 173-303-9904 "K" Waste) typically is not generated at PNNL. However, small quantities of K-listed waste have been generated from treatability studies and sample characterization activities at PNNL from time to time and could be stored at 305-B Storage Facility. W001 state source waste (PCB electrical equipment waste) has been generated in limited amounts in the past and could be stored at 305-B Storage Facility if other generation activities occur.

F-listed waste is designated on the basis of process knowledge (i.e., information from container labels or material safety data sheets), or by sampling. Sampling is performed if the generating unit does not have sufficient information to document the composition and characteristics of the waste. The waste generator is responsible for specifying the characteristics of the waste on the basis of knowledge of the chemical products used (i.e., information supplied by the manufacturer) and the process generating the waste. These listed wastes are all designated as dangerous waste (DW) or extremely hazardous waste (EHW) based on the criteria given in WAC 173-303-100.

Discarded Chemical Products. Discarded chemical products consist of those products described in WAC 173-303-081. The Part A, Form 3, for 305-B Storage Facility identifies all of the discarded chemical products listed in WAC 173-303-9903 and specifies an estimated maximum annual management quantity, based on prior experience. Attachment 18, Chapter 1.0, Part A, Form 3, lists all of these waste

codes, however, because the wide variety of research activities conducted at Hanford presents the potential to generate any of these waste.

These wastes (P waste and U waste) are typically received at 305-B Storage Facility in the manufacturer's original container. These containers typically consist of glass and polyethylene jars or bottles and metal cans that have a volume equal to or less than 4 liters.

Wastes in this category are designated on the basis of the generator's knowledge. As these waste are usually in original containers, information on the container label is verified by generator knowledge (i.e., knowledge that material is in its original container) and is used to identify contents. Waste in 'as procured' containers (i.e., original container with intact label) are not sampled. These listed waste contain those designated as DW as well as those designated as EHW. These waste are also subject to LDR regulations under 40 CFR 268, including disposal prohibitions and treatment standards.

Waste from Research Activities Using Radioactive Isotopes. Dangerous wastes from research activities using radioactive isotopes are RMW. These waste are generated in laboratories performing chemical and physical research, and consist primarily of radiologically contaminated chemicals. These waste are designated on the basis of the generator's knowledge or on the basis of sampling and analysis. The generator's knowledge is used if the generator has kept accurate records of the identities and concentrations of constituents present in the waste. For example, many generating units keep log sheets for accumulation containers in satellite areas to keep a record of waste constituents. If information available from the generator is inadequate for waste designation, the wastes are sampled and the results of the analysis are used for designation. These waste include those designated as state only dangerous waste under WAC 173-303-100 and also those designated as characteristic dangerous waste under WAC 173-303-090. Attachment 18, Chapter 1.0, Part A, Form 3, includes all categories of toxic, and persistent, waste (i.e., both DW and EHW). The wide variety of research activities conducted at Hanford presents the potential that these waste could be generated and requires subsequent management at 305-B Storage Facility. Similarly, Attachment 18, Chapter 1.0, Part A, Form 3, includes the characteristic dangerous waste categories D001 through D043 (i.e., ignitable, corrosive, reactive, and TCLP toxic due to metals or organics content).

Flammables (i.e., flash point less than 100° Fahrenheit) will not be stored in the below-grade RMW cell; however, ignitables (D001 due to oxidizer content) will be stored in this cell. Flammable RMW is not stored below grade due to Fire Code restrictions. These waste are stored above the RMW cell in a flammable storage module. The flammable RMW module is equipped with secondary containment to provide greater than 100% secondary containment volume.

The waste in this category includes those designated as either DW or EHW. The waste could also be federal LDR waste regulated under 40 CFR 268 as well as state LDR waste regulated under WAC 173-303-140 (e.g., organic/carbonaceous waste).

Waste from Chemicals Synthesized or Created in Research Laboratories. Waste from chemicals synthesized or created in research laboratories typically consist of organics in quantities of 100 g or less, received in small containers.

These waste are designated on the basis of the generator's knowledge or on the basis of sampling and analysis. The generator's knowledge is used if the generating unit has kept accurate records of the identities and concentrations of constituents present in the waste (e.g., log sheets for accumulation containers). If information available from the generating unit is inadequate for waste designation, the waste is sampled and the results of the analysis are used for designation. These waste include those designated as state only dangerous waste under WAC 173-303-100 and also those designated as characteristic dangerous waste under WAC 173-303-090. The Part A, Form 3, for 305-B Storage Facility

includes all categories of toxic, and persistent waste (i.e., both DW and EHW). The wide variety of research activities conducted at Hanford presents the potential that these wastes could be generated and requires subsequent management at 305-B Storage Facility.

The waste in this category includes those designated as either DW or EHW. These wastes could also be federal LDR wastes regulated under 40 CFR 268 as well as state LDR wastes regulated under WAC 173-303-140 (e.g., organic/carbonaceous wastes).

Discarded Chemical Products Exhibiting Dangerous Waste Characteristics and/or Criteria. Many discarded chemical products handled in 305-B Storage Facility are not listed in WAC 173-303-9903 and are still considered dangerous waste since they exhibit at least one dangerous waste characteristic and/or criterion (WAC 173-303-090 and WAC 173-303-100). These wastes are included with those listed in the Attachment 18, Chapter 1.0, Part A, Form 3, under waste codes D001 through D043, WT01, WT02, WP01, WP02, and WP03.

Waste in this category is designated based on the generator's knowledge. As these wastes are usually in their original containers, information on the container label is verified by the generator's knowledge and is used to identify the contents. These wastes contain those designated as DW as well as those designated as EHW. These wastes could also be federal LDR waste regulated under 40 CFR 268 as well as state LDR waste regulated under WAC 173-303-140 (e.g., organic/carbonaceous waste).

3.1.1 Containerized Waste

The container storage areas at 305-B Storage Facility meet the containment system requirements of WAC 173-303-630(7)(c). Testing or documentation that the dangerous waste stored at 305-B Storage Facility does not contain free liquids is not required.

3.1.2 Waste in Tank Systems

This section does not apply to the 305-B Storage Facility because wastes are not stored in tanks.

3.1.3 Waste in Piles

This section does not apply to the 305-B Storage Facility because wastes are not stored in piles.

3.1.4 Landfill Waste

This section does not apply to the 305-B Storage Facility because wastes are not placed in landfills.

3.1.5 Waste Incinerated and Waste Used in Performance Tests

This section does not apply to the 305-B Storage Unit because wastes are not incinerated.

3.1.6 Waste to be Land Treated

This section does not apply to the 305-B Storage Facility because waste does not undergo land treatment.

3.2 WASTE ANALYSIS PLAN

This section describes the processes used to obtain the information necessary to manage waste in accordance with the requirements of WAC 173-303.

3.2.1 Facility Description

The 305-B Storage Facility is a dangerous waste and RMW storage unit owned and operated by the Department of Energy and co-operated by Pacific Northwest National Laboratory. The unit is used for the collection, consolidation, packaging, storage, and preparation for transport and disposal of both dangerous waste and RMW. It is an integral part of the Hanford Site's waste management system.

The 305-B Storage Facility is a one-story frame and masonry building with basement constructed in the early 1950s, with an attached two-story-high metal and concrete building constructed in January 1978, referred to in this document as the "high bay". The unit is located within the 300 Area, and was formerly used for engineering research and development. Unit upgrades were completed in 1988 to meet requirements for storage of dangerous waste and RMW. Waste storage under interim status began in March 1989.

3.2.2 Description of Facility Processes and Activities

A variety of small volume chemical wastes are generated by PNNL's research laboratory activities. These wastes are brought to the 305-B Storage Facility and segregated by compatibility for storage in the unit until enough waste is accumulated to fill a labpack or bulking container, usually a 30 - 55-gallon drum. When a sufficient number of shipping containers of waste have accumulated, they are manifested for shipment, generally to permitted off-site recycling, treatment or disposal facilities.

Dangerous wastes are stored in the high bay. The high bay has been equipped with a secondary containment system to facilitate storage of containerized waste. In addition, four storage "cells" have been constructed within the high bay area for segregated storage of incompatible waste streams. Each of the cells is approximately 14' x 14', enclosed by 4' high concrete block walls; each cell has its own separate secondary containment system. Drum-quantity storage for incompatible waste is allowed in these cells and in separated areas of the high bay.

Radioactive mixed waste (RMW) is stored in the basement of the original wing of the building in an area approximately 18' x 32'. Flammable RMW cannot be stored below grade (per Uniform Fire Code) and is stored in an independent area on the first floor of the original wing in the RMW flammable storage module.

Most of the information necessary to manage waste at 305-B Storage Facility is obtained from generating units without the need to perform detailed chemical, physical, and biological analysis. This approach is used for the following reasons:

- Wastes stored at 305-B Storage Facility are generated on the Hanford Site and/or by PNNL research programs; effective administrative control can be maintained over individual waste generating units (i.e., the same organization generates the waste and operates the storage unit)
- Wastes stored at 305-B Storage Facility may be discarded chemical products for which knowledge of waste characteristics is available without further analysis
- Most of the waste stored at 305-B Storage Facility is a result from research activities that are carefully controlled and documented; this documentation includes information on chemical constituents.

Information provided by waste generating units is verified before wastes are accepted for transport to 305-B Storage Facility (e.g., wastes are inspected to verify that they are as described in the disposal request). Generating units are not required to sample wastes unless they have inadequate process knowledge to designate waste, additional LDR information is needed, or visual verification failure occurs.

Verification sampling of waste to be shipped offsite from 305-B Storage Facility is required by the disposal contractor as needed and the contractor performs these analyses.

Because of the importance of administrative controls for the purposes of waste analysis, processes for management of wastes from the time of generation through storage at 305-B Storage Facility are described below. These processes demonstrate how sufficient knowledge is obtained from generating units to properly manage dangerous and mixed waste at 305-B Storage Facility. In the event that such knowledge is not available, sampling and analysis is required by 305-B Storage Facility prior to shipment to the storage unit.

The 305-B Storage Facility personnel shall collect from the generating unit(s) the information pursuant to 40 CFR 268.7(a) regarding LDR wastes, the appropriate treatment standards, whether the waste meets the treatment standards, and the certification that the waste meets the treatment standards, if necessary, as well as any waste analysis data that supports the generator's determinations. If this information is not supplied by the generating unit, then the 305-B Storage Facility personnel shall be responsible for completion and transmittal of all subsequent information regarding LDR wastes, pursuant to 40 CFR 268.7(b). All waste streams must be re-characterized at least annually, or when generating unit and/or 305-B Storage Facility personnel have reason to believe the waste stream has changed, to determine compliance with LDR requirements in 40 CFR 268.

Volumetric Description of Waste. A wide range of waste volumes is collected from research and support activities. The largest unit container collected is a DOT container <0.46 m^3, while the smallest is a trace amount in a small vial.

Large volume containers (greater than 4 L) (commonly contain chemicals such as those listed in WAC 173-303-9903 and -9904 and in 40 CFR 261.33), or commercial products which exhibit one or more of the dangerous waste characteristics or criteria. Greater than 99 percent of the containers generally contain chemicals for which information is easily accessible to determine dangerous designation. This information is generally obtained from the container label, for those waste in original containers, or from the material safety data sheet (MSDS) for the product.

Notification for Storing of Waste: The waste analysis process begins when the waste management organization is notified of the presence of a chemical or mixed waste. This notification is accomplished by the generating unit completing and transmitting an electronic Disposal Request. The form describes the volume and chemical composition of waste in each waste container for disposal. Hazard and compatibility information are obtained for each item on the disposal request form to ensure the safety of the waste management organization staff that collect and transport the waste and to ensure safe and appropriate storage in 305-B Storage Facility.

The compatibility and hazard class are determined using reference material that may include, Condensed Chemical Dictionary, Merck Index, 49 CFR, NIOSH, Sigma-Aldrich or any other reference material that is applicable. The priority of hazard designation for those substances with multiple hazards or for mixtures is the same used by the DOT in 49 CFR 173.2.

Disposal Requests and other information used for determining waste designations and compatibility must meet four distinct needs of the dangerous waste manager and sample collector. They must enable each to:

- Identify those wastes which are designated dangerous in accordance with WAC 173-303 and whether those wastes are DW or EHW
- Determine whether the waste is restricted from land disposal under 40 CFR 268 or WAC 173-303-140 and, as whether it, complies with applicable treatment standards under 40 CFR 268 or WAC 173-303-140

- Identify and verify specific morphological characteristics of waste in solid or solution form
- Outline how to safely handle, transport, analyze, store, and dispose of the waste product or sample.

Physical Analysis. Visual validation as a physical analysis activity strongly relied upon to confirm the nature of a waste collected or sampled, and to determine the accuracy of the disposal request information received from the generating unit. It is impractical for the waste management organization to chemically analyze each container or vial of waste accepted for storage in 305-B Storage Facility since the amount can exceed 10,000 per year. A more realistic approach to reducing risks to safety and the environment, and one implemented at 305-B Storage Facility, includes trained and experienced personnel performing a visual inspection of the waste and direct inquiry of the generating unit's personnel. The waste is inspected to verify that it matches the description on the disposal request. If the waste is a discarded product, the contents of the container are inspected to verify that they match the description of the product. For other waste, e.g., spent solvents, waste descriptions are compared with the products in use at the generating unit. Generating unit personnel are queried concerning the source of the waste and the materials used in the process generating the waste. This information is compared to the description of the waste on the disposal request. If, after visual inspection of the waste and interrogation of the generating unit personnel, any doubt remains as to the true identity of the waste, the waste is sampled and analyzed by the generating unit as described in Section 3.5.

Waste Collection at the Generating Unit. When satisfactory information has been obtained from the Disposal Request Form, waste management organization staff visits the generating unit site and make a final inspection of the waste containers to determine whether the disposal request form and contents label information match completely. If the information on the disposal request matches with the container labeling and visual inspection, the waste is approved for storage. If discrepancies are found, the generating unit is required to resubmit the disposal request with accurate information. Unknown or unidentified materials are sampled by generating unit staff for identification of constituents and remain at the generating unit until the composition has been determined.

Labeling and Marking. After inspection of the waste at the generating unit, the approved waste is assigned a unique computer identification number and hazard classification. Waste meeting Washington dangerous waste criteria under WAC 173-303-090 or 173-303-100 are marked "Toxic" (for waste designated WT01 or WT02), and/or "Persistent" (for waste designated WP01, WP02, or WP03), in accordance with WAC 173-303-630(3). In addition, each waste container is labeled with a list of constituents and major risk(s). The containers are also labeled indicating cell location, and with a unique computer-generated identification number created by the tracking system described below. This computerized information helps the waste handlers ensure safe handling, storage, retrieval and transportation of dangerous waste.

Transportation. The labeled containers are transported to 305-B Storage Facility by PNNL staff trained in applicable DOT requirements and emergency response. Waste is transported using a truck or light utility vehicle. For transport on roads accessible to the public, the vehicles are placarded in compliance with DOT regulations and documented in compliance with WAC 173-303-180, Hanford Facility Permit Conditions II.P. and/or II.Q as applicable.

Waste Handling, Storage, and Tracking at 305-B Storage Facility. Waste received at 305-B Storage Facility is put into 14 separate hazard classifications based on building and fire code restrictions for that type of facility:

1. Non-flammable RMW
2. Oxidizers
3. Acids, (organic and inorganic)
4. Poison

5. Caustics
6. Flammable Solids
7. Non-Regulated
8. Miscellaneous
9. Washington State only waste (e.g., sodium chloride, sodium bicarbonate)
10. Flammable and combustible liquids
11. Flammable and combustible RMW
12. Compressed gases and aerosols
13. Special Case waste (organic peroxides, explosives, etc.)
14. Recycle

Each hazard class has designated and clearly identified locations within 305-B Storage Facility. Containers of dangerous wastes (10 gal or less) are stored in a specific storage cabinet or shelf designed for that hazard class. The cabinets are located inside the appropriate storage cell (i.e., acid storage cabinet in acid cell). DOT-approved containers (typically 10 gal and larger but less than 0.46m3) are segregated by hazard class and can be stored in a appropriate storage cell or on the main high bay floor in 305-B Storage Facility.

Only sealed containers of nonflammable RMW are received in the below-grade RMW storage area located in the basement of 305-B Storage Facility. Containers of flammable RMW are stored above grade in a flammable storage module adjacent to the high bay area. All chemical storage is in accordance with fire protection requirements of the 1988 Uniform Fire Code (International Conference of Building Officials 1988).

Storage limits for all chemicals are listed in Table 4-1, (Uniform Building Code Table numbers 9-A and 9-B). This table is incorporated into this section by reference.

Recordkeeping and Inventory Control. A computer tracking system has been developed to ensure that complete records of current inventory, packaging, and shipping data are maintained. Records of the initial waste disposal request, waste analysis results if required, waste designation, and shipping manifests are maintained. As wastes are received for disposal, the containers are labeled with the information described in the Labeling and Marking section above, including a unique computer identification number.

The endpoint of the process for most waste is proper packaging and transport of the waste to an approved recycler or treatment/disposal facility. Some commercial chemical products, however, are redistributed to other Hanford Site contractors. Final computer verification of the history and ultimate disposal of each waste container is entered when the material is shipped from the 305-B Storage Facility.

Current waste quantities in inventory are periodically verified and reported to the Unit Operations Supervisor. The inventory is checked by hazard class and provides a measure of current inventory versus established limits.

If it is determined that 305-B Storage Facility inventory is within 5 percent of the limit for a given hazard classification, additional waste of that hazard class is not accepted into 305-B Storage Facility until the inventory has been reduced. Exceptions must be approved by the unit operating supervisor.

Unknown Waste and Waste Constituent Verification. Containers with unknown waste compositions are not accepted at 305-B Storage Facility. In the event that 305-B Storage Facility staff is required to respond to a critical need of a generating unit in the future and pick up an unknown waste, it will be sampled and analyzed as described in Sections 3.2.1 through 3.2.4.

If, for any reason, 305-B Storage Facility personnel believe that more stringent analysis of non-reagent grade chemical waste is needed (i.e., flash cans and mixtures), they will request that the generating unit have the waste analyzed by an approved analytical laboratory. Reasons for this request may be questionable appearance of the waste, periodic confirmation of waste composition, or historically unreliable information from a particular generating unit. There is no established frequency for this sampling and analysis; it is conducted on an as-needed basis. This analysis must be performed in accordance with EPA SW-846 procedures (EPA 1986). Analytical laboratories in the area with these capabilities include commercial, Hanford Site and Battelle operated laboratories. The generating unit must also provide the laboratory analysis confirming the waste composition when the waste management organization picks up the waste. This analysis will become part of the 305-B Storage Facility Operating Record.

3.2.3 Identification/EPA Classification and Quantities of Hazardous Wastes Managed Within the 305-B Storage Facility

Refer to Section 3.1 for a description of the types and quantities of wastes managed at 305-B Storage Facility.

3.2.4 Description of Hazardous Waste Management Units

The 305-B Storage Facility Waste Management Units are described in Attachment 18, Chapter 4.0.

3.3 SELECTING WASTE ANALYSIS PARAMETERS

State and federal regulations [WAC 173-303-300(2) and (5)(a); WAC 173-303-140; 40 CFR 268.7(a)] require that information be obtained, documented, and/or reported on wastes received by a TSD unit. These requirements include ensuring that only waste which meets 305-B Storage Facility unit-specific permit requirements are accepted, and reporting the information required by WAC 173-303-380. In addition to providing a general description of the waste, the focus of the information collected for regulatory purposes is to ensure that the 305-B Storage Facility is permitted to accept and store the waste.

The 305-B Storage Facility only accepts wastes that have been characterized properly. Before receipt or acceptance of waste at the 305-B Storage Facility, generators must supply adequate information to characterize and manage wastes properly.

One of the most important aspects of operating the 305-B Storage Facility in a safe manner is to ensure that incompatible wastes are not mixed together. For the purposes of this document, waste is considered compatible if, when mixed, waste does not: (1) generate extreme heat or pressure, fire, or explosion, or violent reaction; (2) produce uncontrolled toxic mists, dusts, or gases in sufficient quantities to threaten human health; (3) produce uncontrolled flammable fumes or gases in sufficient quantities to pose a risk of fire or explosions; (4) damage the structural integrity of the device or facility containing the waste; or (5) through other like means threaten human health or the environment.

Sampling and laboratory analysis could be required to verify or establish waste characteristics for waste that is stored at the 305-B Storage Facility. The following are instances where sampling and laboratory analysis is required:

- inadequate information on PNNL-generated waste
- 5 percent waste verification for PNNL-generated waste
- 10 percent waste verification for non-PNNL-generated waste
- identification and characterization for unknown waste and spills within the unit.

3.3.1 Parameter Selection Process

The selection of analytical parameters is based on the State of Washington's "Dangerous Waste Regulations," WAC 173-303-300 and *EPA Waste Analysis at Facilities That Generate, Treat, Store, and Dispose of Hazardous Wastes, A Guidance Manual* (EPA 1994).

At least five percent of the waste containers received at 305-B during a federal fiscal year (October 1 through September 30) will undergo confirmation of designation pursuant to Sections 3.2.2 and 3.2.3. The number of containers needed to meet the five percent requirement is five percent of the average of containers for the previous three months. For example if 200 containers are received in January, 180 in February, and 220 in March, then 10 containers of received waste must undergo confirmation of designation in April. All non-PNNL generating units which ship more than 20 containers through 305-B Storage Facility in a fiscal year will have at least one 1 container sampled and analyzed. Containers, for which there is insufficient process knowledge, or analytical information to designate without sampling and analysis, may not be counted as part of the five percent requirement unless there is additional confirmation of designation independent of the generator designation. The generating unit's staff shall not select the waste containers to be sampled and analyzed other than identifying containers for which insufficient information is available to designate.

Containers of the following are exempt from the confirmation calculation above: Laboratory reagents or other unused products such as paint, lubricants, solvent, or cleaning products, whether received for redistribution, recycling, or as waste. To qualify for this exemption, such materials must be received at 305-B Storage Facility in their original containers.

Prior to acceptance of wastes at 305-B Storage Facility, confirmation of designation may be required (Section 3.7.3). Wastes that shall undergo confirmation of designation are identified in Condition III.2.B.f. of this Permit and may be divided into two groups; those that easily yield a representative sample (Category I), and those that do not (Category II). The steps for each type are outlined below along with a description of which wastes fall into each category:

Category I. If a waste which easily yields a representative sample is received, a representative sample will be taken from the waste containers selected. If more than one phase is present, each phase must be tested individually. The following field tests will be performed as appropriate for the waste stream:

- Reactivity - oxidizer, cyanide, and sulfide tests. These tests will not be performed on materials known to be organic peroxides, ethers, and/or water reactive compounds.
- Flashpoint/explosivity - explosive atmosphere meter[1], or a closed cup flashpoint measurement instrument[1].
- pH - by pH meter[1] or pH paper (SW-846-9041)[2]. This test will not be performed on non- aqueous materials.
- Halogenated organic compounds.
- Volatile organic compounds - by photo or flame ionization tester[1], by gas chromatography with or without mass spectrometry, or by melting point and/or boiling point determination.

---

[1] These instruments are field calibrated or checked for accuracy daily when in use.

[2] The pH paper must have a distinct color change every 0.5 pH units and each batch of paper must be calibrated against certified pH buffers, or by comparison with a pH meter calibrated with certified pH buffers.

If the sample data observed meets the parameters specified in its documentation, confirmation of designation is complete and the waste may be accepted. If not, the waste is rejected and returned to the generating unit for additional characterization. The waste will be required to be resubmitted with a revised Disposal Request following the additional characterization activity.

When mathematically possible, the Permittees shall perform confirmation on an equal number of Category I and Category II containers.

Category II. If a representative sample is not easily obtained (for example, discarded machinery or shop rags), or if the waste is a labpack or discarded laboratory reagent container, the following steps will be performed:

a. Visually verify the waste. Examine each selected container to ensure that it matches the data provided on the Disposal Request form(s) provided to document the waste. Labpacks and combination packages that are accepted from non-PNNL generators must be removed from the outer container. If the waste matches the description specified in its documentation, confirmation of designation is complete and the waste may be accepted. If not, the waste is rejected and returned to the generating unit, and the generating unit revises and resubmits the documentation to reflect the actual contents. If necessary, the waste shall be re-designated utilizing the designation methods identified in WAC 173-303-070 through 173-303-100."

Waste must be analyzed using the Toxicity Characteristic Leaching Procedure (TCLP) in accordance with Appendix II of 40 CFR 261, as amended, in order to provide sufficient information for proper management and for decisions regarding LDR pursuant to 40 CFR 268.

3.3.2 Criteria and Rational for Parameter Selection

Waste-testing methods, parameters and the rationale for these parameters are summarized in Table 3-1. Waste testing methods and references to these methods are as specified in WAC 173-303-110(3) or approved by Ecology in accordance with WAC 173-303-110(5). These methods are summarized in Table 3-1. All methods are specified in *Chemical Testing Methods*, WDOE 83-13 (Ecology 1983) and/or *Test Methods for Evaluating Solid Waste, Physical/Chemical Methods*, EPA SW-846 (EPA 1986).

Testing parameters for each type of waste were selected to obtain data sufficient to designate the waste properly under WAC 173-303-070, meet requirements for Land Disposal Restrictions, and to manage the waste properly. If information on the source of the waste is available, then all parameters might not be required, e.g., exclusion of testing for pesticides from a metal-machining operation.

Some of the parameters that are considered for waste received at the 305-B Storage Facility are as follows.

- Physical description – used to determine the general characteristics of the waste. This facilitates subjective comparison of the sampled waste with previous waste descriptions or samples. Also, a physical description is used to verify the observational presence or absence of free liquids.
- pH – used to identify the pH and corrosive nature of an aqueous or solid waste, to aid in establishing compatibility strategies, and to indicate if the waste is acceptable for treatment and/or storage in the 325 HWTUs.
- Cyanide – used to indicate whether the waste produces hydrogen cyanide upon acidification below pH 2.

- Sulfide screen – used to indicate if the waste produces hydrogen sulfide upon acidification below pH 2.
- Halogenated hydrocarbon content screen – used to indicate whether chlorinated hydrocarbons or polychlorinated biphenyls (PCBs) are present in waste and to determine if the waste needs to be managed in accordance with the regulations prescribed in the *Toxic Substance Control Act of 1976.*
- Ignitability – used to identify waste that must be managed and protected from sources of ignition or open flame.
- Testing kits – used to determine waste characteristics and verify generator knowledge. The testing procedures for each test are included in the appropriate test kit.

3.3.3 Special Parameter Selection Requirements

The 305-B Storage Facility does not have any process vents that manage hazardous waste with organic concentrations of at least 10 part per million by weight percent, or pumps, or compressors used more than 300 hours per year that come into contact with hazardous waste with an organic concentration of at least 10 percent by weight.

A variety of small volume chemical wastes are generated by PNNL's research laboratory activities. These containers typically range in sizes from 10 ml to 20 gallon. These wastes are brought to the 305-B Storage Facility and segregated by compatibility for storage in the unit until enough waste is accumulated to fill a labpack or bulking container, usually a 30- to 55-gallon drum. All containers having a design capacity greater than 0.1 m3 to less than or equal to 0.46 m3 are equipped with a cover and complies with all applicable Department of Transportation regulations on packaging hazardous waste for transport under 49 CFR part 178.

DOT approved intermediate bulk packaging may be utilized for some solid wastes. These containers range in size from 0.1 cu yard (27 cu ft) to 1.6 cu yard (43 cu ft) and are approved for solid waste only.

3.4 SELECTING SAMPLING PROCEDURES

3.4.1 Sampling Strategies and Equipment

Sample collection methods conform to the representative sample methods referenced in WAC 173-303-110(2). The summary of test parameters, rationales and sampling methods are identified in Table 3-1.

Representative samples of liquid waste from containers (vertical 'core sections') are typically obtained using a composite liquid waste sampler (COLIWASA) or tubing, as appropriate. The sampler is long enough to reach the bottom of the container in order to provide a representative sample of all phases of the containerized liquid waste. If a liquid waste has more than one phase, each phase is separated for individual testing depending on the waste management pathways of the phases.

Other waste types that might require sampling are sludge's, powders, and granules. In general, non-viscous sludge's are sampled using a COLIWASA. Highly viscous sludge's and cohesive solids are sampled using a trier, as specified in SW-846. Dry powders and granules are sampled using a thief, also as specified in SW-846.

Samplers are constructed of material compatible with the waste. In general, aqueous liquids are sampled using polyethylene samplers, organic liquids using glass samplers, and solids using polyethylene

samplers. Disposable samplers are used whenever possible to eliminate the potential for cross-contamination. If non-disposable sampling equipment is used, it is decontaminated between samples.

Representative sampling may be requested by unit staff to ensure proper waste identification. Sampling may be performed by unit personnel or the generating unit producing the waste. The number of grab samples collected from a container depends on the amount of waste present and on the homogeneity of the waste as determined by observation. In some cases, there will be only one container of waste present. In such cases, only one vertical composite sample will be collected (e.g., COLIWASA). If more than one container is present, a random number of samples will be collected and analyzed statistically using the procedures specified in Section 9.2 of SW-846 (EPA 1986).

In all instances, sampling methods will conform to the representative sample method referenced in WAC 173-303-110(2), i.e., ASTM standards for solids and SW-846 for liquids. The specific sampling methods and equipment used varies with the chemical and physical nature of the waste material and the sampling circumstances.

3.4.2 Sampling Preservation and Storage

All sample containers, preservation techniques, and hold times follow SW-846 protocol. Many samples are analyzed at the 305-B Storage Facility utilizing prepackaged test kits and are not preserved.

3.4.3 Sampling QA/QC Procedures

Pacific Northwest National Laboratory is committed to maintaining a high standard of quality for all of its activities. A crucial element in maintaining that standard is a quality-assurance program that provides management controls for conducting activities in a planned and controlled manner and enabling the verification of those activities.

The QA/QC objective of the 305-B Storage Facility is to control and characterize errors associated with collected data, and to illustrate that waste testing has been performed according to specification in this waste analysis plan.

The 305-B Storage Facility will ensure that precision and accuracy are maintained throughout the waste analysis process. For analysis using SW-846 methods, the program will follow the QA/QC guidance set forth in SW-846 at a minimum. Good laboratory practices which encompasses sampling, sampling handling, housekeeping, and safety are followed throughout the process. There are many elements of QA/QC associated with the sampling processes at the 305-B Storage Facility. These practices ensure that all data and the decisions based on that data are technically sound, statistically valid, and properly documented.

Activities pertaining to waste analysis include, but are not limited to, the preparation, review, and control of procedures and the selection of analytical laboratories. The Laboratory's QA SBMS subject area has administrative procedures that establish requirements and provide guidance for the preparation of analytical and technical (i.e., sampling, chain-of-custody, work processes) procedures, as well as other administrative procedures. Procedures undergo a review cycle and, once issued, are controlled to ensure that only current copies are used.

The primary purpose of waste testing is to ensure that the waste is properly characterized in lieu of process-knowledge data, in compliance with RCRA requirements for general waste analysis [WAC 173-303-300(2); 40 CFR 264.13]. Waste testing also is performed to ensure the safe management of waste being stored, proper disposition of residuals from incidents that might occur, and control of the

acceptance of waste for storage. The specific objectives of the waste-sampling and analysis program at the 305-B Storage Facility are as follows:

- Identify the presence of waste that is substantially different from waste currently stored.
- Provide a detailed chemical and physical analysis of a representative sample of the waste, before the waste is accepted at or transferred from the 305-B Storage Facility to an offsite TSD facility, to ensure proper management and disposal.
- Provide an analysis that is accurate and up-to-date to ensure that waste is properly treated and disposed of.
- Ensure safe management of waste undergoing storage at the 305-B Storage Facility.
- Ensure proper disposal of residuals.
- Ensure compliance with LDR's.
- Identify and reject waste that does not meet the 305-B Storage Facility's acceptance requirements (e.g., incomplete information).
- Identify and reject waste that does not meet specifications for the 305-B Storage Facility (i.e., Part A, Form 3, listing, restricted from storage at the 305-B Storage Facility).

QA/QC Objectives

The objectives of the QA/QC program are two-fold. The first objective is to control and characterize any errors associated with the collected data. Quality-assurance activities, such as the use of standard methods for locating and collecting samples, are intended to limit the introduction of error. Quality-control activities, such as the collection of duplicate samples and the inclusion of blanks in sample sets, are intended to provide the information required to characterize any errors in the data. Other QC activities, such as planning the QC program and auditing ongoing and completed activities, ensure that the specified methods are followed and that the QA information needed for characterizing error is obtained.

The second QA/QC objective is to illustrate that waste testing has been performed according to specification in this waste-analysis plan. The QA/QC activities will include the following:

- Field inspections – performed and documented by 305-B Storage Facility staff or designee, depending on the activity. The inspections primarily are visual examinations but might include measurements of materials and equipment used, techniques employed, and the final products. The purpose of these inspections is to verify that a specific guideline, specification, or procedure for the activity is completed successfully.
- Field testing – performed onsite by 305-B Storage Facility staff (or designee) according to specified procedures.
- Laboratory analyses – performed by onsite or offsite laboratories on samples of waste. The purpose of the laboratory analyses is to determine constituents or characteristics present and the concentration or level.

Sampling Objectives

The data-quality objectives (DQO) for the waste sampling and data analyses are as follows:

- Determine if waste samples are representative of the contents of the containers at the time the samples were taken.

- Determine if waste samples are representative of long-term operations affecting the 305-B Storage Facility.
- Determine if waste accepted for storage is within the RCRA permit documentation limitations.
- Determine if waste accepted for storage meets the requirements of the 305-B Storage Facility waste-acceptance criteria.
- Determine if waste accepted for storage meets the information provided by the generator.

Data Collection/Sampling Objectives

The acquired data need to be scientifically sound, of known quality, and thoroughly documented. The DQOs for the data assessment will be used to determine compliance with national quality standards, which are as follows:

- Precision – The precision will be the agreement between the collected samples (duplicates) for the same parameters, at the same location, and from the same collection vessel.
- Representativeness – The representativeness will address the degree to which the data accurately and precisely represent a real characterization of the population, parameter variation at a sampling point, sampling conditions, and the environmental condition at the time of sampling. The issue of representativeness will be addressed for the following points:
- Based on the generating process, the waste stream, and its volume, an adequate number of sampling locations are selected

The representativeness of selected media has been defined accurately

- The sampling and analytical methodologies are appropriate.
- The environmental conditions at the time of sampling are documented.
- Completeness – The completeness will be defined as the capability of the sampling and analytical methodologies to measure the contaminants present in the waste accurately.
- Comparability – The comparability of the data generated will be defined as the data that are gathered using standardized sampling methods, standardized analyses methods, and quality-controlled data-reduction and validation methods.

Analytical Objectives

Analytical data will be communicated clearly and documented to verify that laboratory data-quality objects are achieved.

Field Quality Assurance and Quality Control

Internal QA/QC checks will be established by submitting QA and QC samples to the analytical laboratory. The number of field QA samples will be approximately 5 percent of the total number of field samples taken. The 5 percent criterion commonly is accepted for a minimum number of QA/QC samples. The types and frequency of collection for field QA samples are as follows:

- Field Blanks – A sample of analyte-free media taken from the laboratory to the sampling site and returned to the laboratory unopened. Field blanks are prepared and preserved using sample containers from the same lot as the other samples collected that day. A sample blank is used to document contamination attributable to shipping and field-handling procedures. This type of blank is useful in documenting contamination of volatile organics samples.

- Field Duplicates – defined as independent samples collected in such a manner that the samples are equally representative of the variables of interest at a given point in space and time. The laboratory will use the field duplicate as laboratory duplicate and/or matrix spikes. Thus, for the duplicate sample, there will be the normal sample analysis, the field duplicate, and the laboratory duplicate (inorganic analysis). Duplicate samples will provide an estimate of sampling precision.

Laboratory Quality Assurance and Quality Control

All analytical work, whether performed by independent laboratories, is defined and controlled by a Statement of Work, prepared in accordance with administrative procedures. The daily quality of analytical data generated in the analytical laboratories will be controlled by the implementation of an analytical laboratory QA plan. At a minimum, the plan will document the following:

- sample custody and management practices
- requirements for sample preparation and analytical procedures
- instrument maintenance and calibration requirements
- internal QA/QC measures, including the use of method blanks
- required sample preservation protocols
- analysis capabilities.

The types of internal quality-control checks are as follows:

- Method Blanks – Method blanks usually consist of laboratory reagent-grade water treated in the same manner as the sample (i.e., digested, extracted, distilled) that is analyzed and reported as a standard sample would be reported.
- Method Blank Spike – A method blank spike is a sample of laboratory reagent-grade water fortified (spiked) with the analytes of interest, which is prepared and analyzed with the associated sample batch.
- Laboratory Control Sample – A QC sample introduced into a process to monitor the performance of the system.
- Matrix Spikes – An aliquot of sample spiked with a known concentration of target analyte(s). The spiking occurs prior to sample preparation and analysis. Matrix spikes will be performed on 5 percent of the samples (1 in 20) or one per batch of samples.
- Laboratory Duplicate Samples – Duplicate samples are obtained by splitting a field sample into two separate aliquots and performing two separate analyses on the aliquots. The analyses of laboratory duplicates monitor the precision of the analytical method for the sample matrix; however, the analyses might be affected by nonhomogeneity of the sample, in particular, by nonaqueous samples. Duplicates are performed only in association with selected protocols. Duplicates are performed only in association with selected protocols. Laboratory duplicates are performed on 5 percent of the samples (1 in 20) or one per batch of samples. If the precision value exceeds the control limit, then the sample set must be reanalyzed for the parameter in question.
- Known QC Check Sample – This is a reference QC sample as denoted by SW-846 of known concentration, obtained from the EPA, the National Institute of Standards and Technology, or an EPA-approved commercial source. This QC sample is taken to check the accuracy of an analytical procedure. The QC sample is particularly applicable when a minor revision or adjustment has been made to an analytical procedure or instrument. The results of a QC-check- standard analysis are compared with the true values, and the percent recovery of the check standard is calculated.

PNNL Analytical Chemistry Laboratory QA/QC

PNNL's analytical chemistry laboratory may need to be used to analyze samples of high-activity dangerous waste. It has a rigorous QA plan that ensures that data produced are defensible, scientifically valid, and of known precision and accuracy, and meets the requirements of its clients.

Offsite Laboratory QA/QC

When it is necessary to send samples to an independent laboratory, contracts are not awarded until a pre-award evaluation of the prospective laboratory has been performed. The pre-award evaluation process involves the submittal of its QA plan to PNNL QA staff and the unit-operating supervisor. It also may involve a site visit by QA personnel and a technical expert, or may consist of a review of the prospective laboratories' QA/QC documents and records of surveillances/inspections, audits, non-conformances, and corrective actions maintained by PNNL or other Hanford Facility contractors.

Recordkeeping

Records associated with the waste-analysis plan and waste-verification program are maintained by the waste-management organization. A copy of the Disposal Request for each waste stream accepted at the 305-B Storage Facility is maintained as part of the operating record. Generators maintain their sampling and analysis records. The waste-analysis plan will be revised whenever regulation changes affect the waste-analysis plan.

Staff of the 305-B Storage Facility has a goal of continuous improvement by ensuring that all analytical data produced is of known accuracy and precision, exceeds all industry standards and is scientifically valid. Using the above practices and following the appropriate 305-B Storage Facility operating procedures staff can monitor and ensure that progress is being made in the quality of the data produced.

3.4.4 Health and Safety Protocols

During all sampling activities, precautions will be taken to ensure that waste containers do not expel gases and/or pressurized liquids. All personnel will be properly trained in safety and handling techniques.

3.5 SELECTING A LABORATORY, AND LABORATORY TESTING AND ANALYTICAL METHODS

3.5.1 Selecting a Laboratory

Laboratory selection is limited; only a few laboratories are equipped to handle mixed waste because of special equipment and procedures that must be used to minimize personnel exposure. Preference will be given to any PNNL facility or other laboratories on the Hanford Facility that exhibit demonstrated experience and capabilities in three major areas:

- comprehensive written QA/QC program based on DOE-RL requirements specifically for that laboratory
- audited for effective implementation of QA/QC program
- participate in performance-evaluation samples to demonstrate analytical proficiency.

All laboratories (onsite or offsite) are required to have the following QA/QC documentation:

- Daily analytical data generated in the contracted analytical laboratories is controlled by the implementation of an analytical laboratory QA plan.
- Before commencement of the contract for analytical work, the laboratory will, have their QA plan available for review. At a minimum, the QA plan will document the following:
- sample custody and management practices
- requirements for sample preparation and analytical procedures
- instrument maintenance and calibration requirements
- internal QA/QC measures, including the use of method blanks
- required sample preservation protocols
- analysis capabilities.

3.5.2 Selecting Testing and Analytical Methods

PNNL waste generators may need to conduct analyses to provide information to fill out a Disposal Request form, and to determine compatibility, safety, and operating information. As needed, 305-B Storage Facility staff also will conduct analyses to determine completeness of information and if the waste meets the acceptance criteria for disposal, treatment or storage at one of the Hanford Facility-permitted treatment/storage/disposal areas or that of one of the offsite TSD facilities. Testing and analytical methods will depend on the type of analysis sought and the reason for needing the information.

Chemists and/or appropriate personnel working under approved QA guidelines perform all testing. Analytical methods will be selected from those that are described in Section 3.3.1.

3.6 SELECTING WASTE RE-EVALUATION FREQUENCIES

Some analysis will be needed to verify that waste streams received by the 305-B Storage Facility conform to the information on the Disposal Request and or the waste analysis sheet supplied by the generator. If discrepancies are found between information on the Disposal Request, hazardous-waste manifest, shipping papers, waste- analysis documentation and verification analysis, then the discrepancy will be resolved by:

- returning waste to the generator, or sample and analyze the materials in accordance with WAC 173-303-110; and/or
- reassessing and re-designating the waste; repackaging and labeling as necessary or return to the generator.

Periodic re-evaluation provides verification that the results from the initial verification are still valid. Periodic re-evaluation also checks for changes in the waste stream.

Exceptions to physical screening for verification are:

Analysis and characterization, as required by WAC 173-303-300(2), are performed on each waste before acceptance at the 305-B Storage Facility to determine waste designation and characteristics. The characterization of the waste, based on this information, is reviewed each time a waste is accepted. The information must be updated by the generator when the waste stream changes or if the following occurs.

- The 305-B Storage Facility personnel have reason to suspect a change in the waste, based on inconsistencies in packaging, labeling or visual inspection of the waste.
- The information submitted previously does not match the characteristics of the waste submitted.

Sampling and laboratory analysis could be required to verify or establish waste characteristics for waste that is stored at the 305-B Storage Facility. The following are instances where sampling and laboratory analysis are required:

- inadequate information on PNNL-generated waste
- waste streams generated onsite will be verified at 5 percent of each waste stream
- inadequate information before waste was shipped or discrepancy discovered
- waste streams received from offsite generators will be verified at 10 percent of each waste stream applied per generator, per shipment
- identification and characterization for unknown waste and spills.

3.7 SPECIAL PROCEDURAL REQUIREMENTS

3.7.1 Procedures for Receiving Waste From off-site Generators

Most of the waste stored at 305-B Storage Facility is generated on the Hanford Site and/or by PNNL research programs within the 300 Area. Additional requirements for waste generated outside the 300 Area include proper manifesting (if appropriate) to 305-B Storage Facility and proper packaging for transport over public roadways. Although PNNL waste generated outside of the 300 Area is considered to be generated offsite since it may be transported to 305-B Storage Facility on roads accessible to the public, it is under the same administrative controls as wastes that are generated onsite (i.e., in the 300 Area).

The generator is responsible for identifying waste composition accurately and PNNL waste operations will arrange for the transport of the waste. The 305-B Storage Facility maintains a copy of any pertinent operating record in accordance with WAC 173-303 and the time frames described in Attachment 33, General Information Portion, Chapter 12 (DOE/RL-91-28). The waste-tracking methods are as follows.

- **Inspection of Shipping Papers/Documentation** – The necessary shipment papers for the entire shipment are verified (i.e., signatures are dated, all waste containers included in the shipment are accounted for and correctly indicated on the shipment documentation, there is consistency throughout the different shipment documentation, and the documentation matches the labels on the containers).
- **Inspection of Waste Containers** – The condition of waste containers is checked to verify that the containers are in good condition (i.e., free of holes and punctures).
- **Inspection of Container Labeling** – Shipment documentation is used to verify that the containers are labeled with the appropriate "Hazardous/Dangerous Waste" labeling and associated markings according to the contents of the waste container.
- **Acceptance of Waste Containers** – The 305-B Storage Facility personnel sign the Shipment documents and retain a copy.

If Shipment will be received from or destined offsite, then a Uniform Hazardous Waste Manifest will be prepared identifying the 305-B Storage Facility as the receiving unit (Hanford Facility Permit, Condition II.P. The 305-B Storage Facility operations staff will sign and date the manifest to certify that the dangerous waste covered by the manifest was received. The transporter will be given at least one copy of the signed manifest. A copy of the manifest will be returned to the generator within 30 days of

receipt at the 305-B Storage Facility. A copy of the manifest also will be retained in the 305-B Storage Facility operating record.

For onsite waste transfers subject to Hanford RCRA Permit, Dangerous Waste Portion, Condition II.Q.1, documentation meeting that requirement will be prepared and accompany the shipment. The documentation will be maintained in the Operating Record.

Response to Significant Discrepancies

The primary concern during acceptance of containers for storage is improper packaging or manifest discrepancies. Containers with such discrepancies are not accepted at the 305-B Storage Facility until the discrepancy has been resolved. Depending on the nature of the condition, such discrepancies can be resolved through the use of one or more of the following alternatives.

- Incorrect or incomplete entries on the Uniform Hazardous Waste Manifest can be corrected or completed with concurrence of the onsite generator or offsite generator. Corrections are made by drawing a single line through the incorrect entry. Corrected entries are initialed and dated by the individual making the correction.
- The waste packages can be held and the onsite generator or offsite waste generator requested to provide written instructions for use in correcting the condition before the waste is accepted.
- Waste packages can be returned as unacceptable.
- If a noncompliant dangerous waste package is received from an offsite waste generator, and the waste package is non-returnable because of condition, packaging, etc., and if an agreement cannot be reached among the involved parties to resolve the noncompliant condition, then the issue will be referred to DOE-RL and Ecology for resolution. Ecology will be notified in writing if a discrepancy is not resolved within 15 days after receiving a noncompliant shipment. Pending resolution, such waste packages, although not accepted, might be placed in the 305-B Storage Facility. The package(s) will be segregated from other waste and an entry will be made into the 305-B Storage Facility logbook describing the actions that were taken to store the packages in a safe manor until a resolution has been reached.

Activation of Contingency Plan for Damaged Shipment

If waste shipments arrive at the 305-B Storage Facility in a condition that presents a hazard to public health or the environment, the Building Emergency Procedure is implemented as described in the Hanford Facility RCRA Permit, Attachment 18, Chapter 7.0 for the 305-B Storage Facility.

3.7.2 Procedures for Ignitable, Reactive, and Incompatible Wastes

Ignitable, reactive and incompatible wastes are stored in compliance with Uniform Fire Code Division II regulations for Container and Portable Tank Storage Inside Buildings (International Conference of Building Officials 1988). Containers of ignitable, reactive and incompatible wastes are stored in individual flammable material storage cabinets within the storage cells.

Section 6.5.2 describes procedures used at 305-B Storage Facility to determine the compatibility of dangerous wastes so that incompatible wastes are not stored together. Chemical wastes stored in 305-B Storage Facility are separated by chemical makeup and hazard class and stored in areas having appropriate secondary containment, as described in Section 4.1.1.6.

As shown in Figures 4-1 through 4-10, each storage area has individual storage configurations; secondary containment structures are provided to assure that incompatible materials will not commingle if spilled.

Further segregation is provided by chemical storage cabinets located throughout the facility in various areas as shown in Figures 4-1 through 4-10. Cabinet types are noted in those figures and capacities described in Table 4-2. Incompatible wastes are never placed in the same container, or in unwashed containers that previously held incompatible waste.

Compliance with WAC 173-303-395(1)(b) is assured by utilizing this system, and the procedure for handling ignitable or reactive waste and mixing of incompatible waste, as described in Section 6.5.2.

3.7.3 Procedures To Ensure Compliance With LDR Requirements

LDR Waste-Analysis Requirements

The *Hazardous and Solid Waste Amendments of 1984* prohibit the land disposal of certain types of wastes that are subject to RCRA. Most of the waste types stored at the 305-B Storage Facility falls within the purview of these land-disposal restrictions (LDRs). Information presented below describes how generators and 305-B Storage Facility personnel characterize, document, and certify waste subject to LDR requirements.

Waste Characterization

Before being received at the 305-B Storage Facility, the RCRA waste characteristics, the level of toxicity characteristics, and the presence of listed wastes are determined during the physical and chemical analyses process. This information allows waste-management personnel to make all LDR determinations accurately and complete appropriate notifications and certifications.

Sampling and Analytical Procedures

The LDR characterization and analysis is generally performed as part of the waste-characterization and analysis process. If waste is sampled and analyzed for LDR characterization, then only EPA or equivalent methods are used to provide sufficient information for proper management and for decisions regarding LDRs pursuant to 40 CFR 268.

Frequency of Analysis

Before acceptance and during the waste-characterization and analysis process, all LDR characterizations and designations are made. The characterization and analysis process is performed when a Disposal Request is submitted for waste pick-up, unless there is insufficient data or if the waste stream has changed. Instances where sampling and laboratory analysis may be required to determine accurate LDR determinations include the following:

- when waste-management personnel have reason to suspect a change in the waste based on inconsistencies on the Disposal Request, packaging, or labeling of the waste
- when the information submitted previously by a generator does not match the characteristics of the waste that was submitted
- when the offsite TSD facility rejects the waste because the fingerprint samples are inconsistent with the waste profile provided by the 305-B Storage Facility that was established using generator information.

Dangerous waste types listed in Table 3-1 are sampled as needed on an individual container or batch basis before they are collected from the point of generation or prior to shipment offsite. After the dangerous

constituents have been characterized, these waste streams will not be analyzed again until process or raw material changes occur.

Documentation and Certification

The 305-B Storage Facility has and will continue to receive and store LDR waste. Because 305-B Storage Facility personnel determine designations and characterization, including LDR determinations, all notifications and certifications, as required by 40 CFR 268, are prepared by qualified staff for PNNL-generated waste. The 305-B Storage Facility staff collects from the generator(s) the information pursuant to 40 CFR 268 regarding LDR waste. The notifications and certifications are submitted to onsite and offsite TSD units during the waste-shipment process. Additionally, any necessary LDR variances are prepared and submitted by PNNL qualified staff.

The 305-B Storage Facility staff requires applicable LDR information/notifications from non-PNNL generators.

Where an LDR waste does not meet the applicable treatment standards set forth in 40 CFR 268, Subpart D, or exceeds the prohibition levels set forth in 40 CFR 268.32 or Section 3004(d) of RCRA, the 305-B Storage Facility provides to the onsite and offsite TSD a written notice that includes the following information:

- EPA hazardous-waste number
- the corresponding treatment standards and all applicable prohibitions set forth in WAC 173-303, 40 CFR 268.32, or RCRA Section 3004(d)
- the manifest number associated with the waste
- all available waste-characterization data.
- identification of underlying hazardous constituents.

In instances where 305-B Storage Facility staff determines that a restricted waste is being managed that can be land-disposed without further treatment, 305-B Storage Facility staff submits a written notice and certification to the onsite or offsite TSD where the waste is being shipped, stating that the waste meets applicable treatment standards set forth in WAC 173-303-140 (40 CFR 268, Subpart D), and the applicable prohibition levels set forth in 40 CFR 268.32 or RCRA Section 3004(d). The notice includes the following information:

- EPA hazardous-waste number
- corresponding treatment standards and applicable prohibitions
- waste-tracking number associated with the waste
- all available waste-characterization data
- identification of underlying hazardous constituents.

The certification accompanying any of the previously described notices is signed by an authorized representative of the generator and states the following:

I certify under penalty of law that I personally have examined and am familiar with the waste through analysis and testing or through knowledge of the waste to support this certification that the waste complies with the treatment standards specified in 40 CFR Part 268 Subpart D and all applicable prohibitions set forth in 40 CFR 268.32 or RCRA Section 3004(d). I believe that the information I submitted is true, accurate, and complete. I am aware that there are significant penalties for submitting a false certification, including the possibility of a fine and imprisonment.

Copies of all notices and certifications described are retained at the TSD unit for at least five years from the date that the waste was last sent to an onsite or offsite TSD unit. After that time, the notices and certifications are sent to Records Storage.

Table 3-1. Summary of Test Parameters, Rationales, and Methods

Parameter[a]	Method[b]	Rationale for Selection
Physical Screening		
Visual inspection	Field method - observe phases, presence of solids in waste	Confirm that waste matches that described on waste acceptance documentation; identify waste prohibited by LDR requirements related to downstream TSD unit acceptance criteria
Chemical Screening		
Water miscibility/separable organics	Water mix screen ASTM Method D5232-92	Confirm that waste matches that described on waste acceptance documentation; identify separable organics; identify waste prohibited by LDR requirements related to downstream TSD unit acceptance criteria
Water reactivity	Water mix screen ASTM Method D5232-92	Confirm that waste matches that described on waste acceptance documentation; ensure compliance with WAC 173-303-395(1)(b)
pH	pH screen SW-846 Method 9041	Confirm that waste matches that described on waste acceptance documentation; ensure compliance with WAC 173-303-395(1)(b)
Cyanides	Cyanide screen	Confirm that waste matches that described on waste acceptance documentation; ensure compliance with WAC 173-303-395(1)(b)
Sulfides	Sulfide screen	Confirm that waste matches that described on waste acceptance documentation; ensure compliance with WAC 173-303-395(1)(b)
Flashpoint	Photoionizer or Flame Ionizer	Confirm that waste matches that described on waste acceptance documentation
Halogenated Organic Compounds	Photoionizer or Flame Ionizer, or Clor-D-Tect © Kits	Confirm that waste matches that described on waste acceptance documentation
Pre-Shipment Review		
Mercury (total)	Generator knowledge or SW-846 Method 7470/7471	Identify waste prohibited by LDR requirements related to downstream TSD unit acceptance criteria.
Toxicity characteristic organic compounds	Generator knowledge or SW-846 Methods 1311 and 8260 (volatile organic compounds) and 8270 (semivolatile organic compounds)	Identify waste not identified on the Part A, Form 3
Polycyclic aromatic hydrocarbons	Generator knowledge or SW-846 Method 8270 or 8100	Identify waste not identified on the Part A, Form 3 (for waste with >1% solids and for which WP03 could apply)

[a] Addition parameters can be used on current waste acceptance criteria of the downstream TSD unit. Operation limits transfer/shipments are based on current waste acceptance criteria.
[b] Procedures based on EPA SW-846, unless otherwise noted. When regulations require a specific method, the method shall be followed.

Hanford Facility RCRA Permit Modification Notification Forms
Part III, Chapter 5 and Attachment 35
242-A Evaporator

Quarter Ending March 31, 2003

Index

Page 2 of 5:	Hanford Facility RCRA Permit, III.5
Page 3 of 5:	Chapter 4.0, Section 4.2.1
Page 4 of 5:	Chapter 6.0, Section 6.3.2.2
Page 5 of 5:	Chapter 7.0, Section 7.4.4

Hanford Facility RCRA Permit Modification Notification Form

Unit:	Permit Part & Chapter:
242-A Evaporator	**Part III, Chapter 5 and Attachment 35**

Description of Modification:

Hanford Facility RCRA Permit, Condition III.5.A:

CHAPTER 5

242-A Evaporator

The 242-A Evaporator is a mixed waste treatment and storage unit consisting of a conventional forced-circulation, vacuum evaporation system to concentrate mixed-waste solutions. This Chapter sets forth the operating Conditions for this TSD unit.

III.5.A. COMPLIANCE WITH APPROVED PERMIT APPLICATION

The Permittees shall comply with all requirements set forth in Attachment 35, including all Class 1 Modification, and the Amendments specified in Condition III.5.B, if any exist. All subsections, figures, and tables included in these portions are enforceable):

ATTACHMENT 35:

Chapter 1.0	Part A, Form 3, Dangerous Waste Permit, Revision 7A, from Class 1 Modification for quarter ending December 31, 2002
Chapter 2.0	Unit Description, from Class 1 modification for quarter ending December 31, 2002
Chapter 3.0	Waste Analysis Plan, from Class 1 Modification for quarter ending December 31, 2002
Chapter 4.0	Process Information, from Class 1 Modifications for quarter ending March 31, 2003~~December 31, 2002~~
Chapter 6.0	Procedures to Prevent Hazards, from Class 1 Modification for quarter ending March 31, 2003~~December 31, 2002~~
Chapter 7.0	Contingency Plan, from Class 1 Modification from quarter ending ~~December 31, 2002~~ March 31, 2003
Chapter 8.0	Personnel Training, from Class 1 Modification from quarter ending December 31, 2002
Chapter 11.0	Closure and Financial Assurance, from Class 1 Modification for quarter ending December 31, 2002
Chapter 12.0	Reporting and Recordkeeping, from Class 1 Modification from quarter ending December 31, 2002
Chapter 13.0	Other Federal and State Laws, from Class 1 Modification from quarter ending December 31, 2002
Appendix 4B	The 242-A Evaporator/Crystallizer Tank System Integrity Assessment Report, from Class 1 Modification for quarter ending December 31, 2002

III.5.B. AMENDMENTS TO THE APPROVED PERMIT APPLICATION

III.5.B.1 Portions of DOE/RL-94-02 that are not made enforceable by inclusion in the applicability matrix for that document, are

Modification Class: [1 2 3]	Class 1	Class [1]1	Class 2	Class 3
Please check one of the Classes:	X			

Relevant WAC 173-303-830, Appendix I Modification: A.1.

Enter wording of the modification from WAC 173-303-830, Appendix I citation

A. General Permit Provisions
   1. Administrative and informational changes.

Submitted by Co-Operator:	Reviewed by RL Program Office:	Reviewed by Ecology:	Reviewed by Ecology:
3/24/03	3/26/03		
J. A. Van Vliet Date	G. H. Sanders Date	F. Jamison Date	L.E. Ruud Date

[1] Class 1 modifications requiring prior Agency approval.

[2] This is only an advanced notification of an intended Class [1]1, 2, or 3 modification, this should be followed with a formal modification request, and consequently implement the required Public Involvement processes when required.

[3] If the proposed modification does not match any modification listed in WAC 173-303-830 Appendix I, then the proposed modification should automatically be given a Class 3 status. This status may be maintained by the Department of Ecology, or down graded to [1]1, if appropriate.

Hanford Facility RCRA Permit Modification Notification Form	
Unit: **242-A Evaporator**	Permit Part & Chapter: **Part III, Chapter 5 and Attachment 35**

Description of Modification:

Chapter 4.0, Section 4.2.1:
Clarify basis for integrity assessment frequency will be based on knowledge gained during tank integrity assessments.

4.1.2 Integrity Assessments [D-2a(2)]

The IAR (Appendix 4B) discusses:

- The standards used during design and construction of the 242-A Evaporator and the adequacy of those standards
- The characteristics of the DST waste processed
- The adequacy of the materials of construction to provide corrosion protection from the waste 30
- processed
- The age of the tanks and the affect of age on tank integrity
- The results of the leak tests, visual inspections, and tank wall thickness inspections
- The frequency and scope of future integrity assessment
- Deficiencies in secondary containment design. These deficiencies are discussed in Section 4.1.5.

The integrity assessment was certified by an independent, qualified registered professional engineer. The inspections, tests, and analyses performed provide assurance that the 242-A Evaporator tank system has adequate design, sufficient structural strength, and sufficient compatibility with the waste to not collapse, rupture, or fail during operation. No evidence of degradation was noted during the visual test, ultrasonic test, or leak test. Both condensate collection tank C-100 and the vapor-liquid separator/reboiler loop passed leak tests. The frequency of subsequent integrity assessments will be established based on the results of the last integrity assessment.~~Based on the results of the integrity assessment, an assessment frequency of 5 years or 8,000 hours of operation has been established.~~

Modification Class: [1 2 3]	Class 1	Class [1]1	Class 2	Class 3
Please check one of the Classes:	X			

Relevant WAC 173-303-830, Appendix I Modification: A.1.

Enter wording of the modification from WAC 173-303-830, Appendix I citation

A. General Permit Provisions
   1. Administrative and informational changes.

Submitted by Co-Operator:		Reviewed by RL Program Office:		Reviewed by Ecology:		Reviewed by Ecology:	
J. A. Van Vliet	3/24/03 Date	G. H. Sanders	3/26/03 Date	F. Jamison	Date	L.E. Ruud	Date

[1] Class 1 modifications requiring prior Agency approval.

[2] This is only an advanced notification of an intended Class [1]1, 2, or 3 modification, this should be followed with a formal modification request, and consequently implement the required Public Involvement processes when required.

[3] If the proposed modification does not match any modification listed in WAC 173-303-830 Appendix I, then the proposed modification should automatically be given a Class 3 status. This status may be maintained by the Department of Ecology, or down graded to [1]1, if appropriate.

Hanford Facility RCRA Permit Modification Notification Form	
Unit: **242-A Evaporator**	Permit Part & Chapter: **Part III, Chapter 5 and Attachment 35**

Description of Modification:

Chapter 6.0, Section 6.3.2.2:
Clarify SCBAs are radiological protective equipment and included only for information.

6.3.2.2 Emergency Equipment

Emergency equipment is available throughout the 242-A Building. The locations of telephones, public address systems, and alarms are given in Attachment 35, Chapter 7.0, Contingency Plan.

Major fire damage is unlikely at the 242-A Evaporator because of the concrete construction and because the amount of combustible material is minimal. A temperature-activated water sprinkler system, emergency lights, fire alarms pull boxes, and fire extinguishers are located throughout the facility. The Hanford Fire Department is capable of providing rapid response to major fires at the 242-A Evaporator and its vicinity, with a fire hydrant located near the east side of the facility.

Safety showers are located in the areas where personnel are most likely to have direct exposure of hazardous materials: in the AMU room and on the first and fourth floors of the condenser room. Water for these devices is supplied from the sanitary water system. Self-contained breathing apparatus units are available in the control room for use throughout the 242-A Building for protection from radiological hazards and are not subject to the HF RCRA Permit provisions. Respirators are located in the PPE storage room near the entryway to the condenser room. Other PPE, such as hazardous material protective gear and special work procedure clothing, are located in cabinets in the survey area. If required, PPE is donned before entry into the rooms containing mixed waste. The level of personal protective equipment required depends on the level of contamination in the area being entered and the activity being performed.

A spill control kit is located in a cabinet near the door to the PPE storage room. An inventory of the equipment in the spill kit is included inside the cabinet. The spill kit cabinet door seal is checked monthly to ensure the kit has not been used. The kit inventory is inspected annually.

The 242-A Evaporator operating personnel are trained in the use of emergency equipment (Attachment 35, Chapter 8.0). Additionally, the Hanford Facility maintains a sufficient inventory of heavy equipment (e.g., bulldozers, cranes, road graders) for emergency response.

Modification Class: [1 2 3]	Class 1	Class [1]1	Class 2	Class 3
Please check one of the Classes:		X		

Relevant WAC 173-303-830, Appendix I Modification: A.1.

Enter wording of the modification from WAC 173-303-830, Appendix I citation
A. General Permit Provisions
1. Administrative and informational changes.

Submitted by Co-Operator:		Reviewed by RL Program Office:		Reviewed by Ecology:		Reviewed by Ecology:	
J. A. Van Vliet	3/24/03 Date	G. H. Sanders	3/26/03 Date	F. Jamison	Date	L.E. Ruud	Date

[1] Class 1 modifications requiring prior Agency approval.

[2] This is only an advanced notification of an intended Class [1]1, 2, or 3 modification, this should be followed with a formal modification request, and consequently implement the required Public Involvement processes when required.

[3] If the proposed modification does not match any modification listed in WAC 173-303-830 Appendix I, then the proposed modification should automatically be given a Class 3 status. This status may be maintained by the Department of Ecology, or down graded to [1]1, if appropriate.

Hanford Facility RCRA Permit Modification Notification Form

Unit:	Permit Part & Chapter:
242-A Evaporator	**Part III, Chapter 5 and Attachment 35**

Description of Modification:

Chapter 7.0, Section 7.4.4:
SCBAs are radiological protective equipment and not part of the RCRA contingency plan.

7.4.4 Personal Protective Equipment

Type	Location	Capability
~~Self-contained breathing apparatus (SCBA)~~	~~Two located in the 242-A Evaporator control room~~	~~Provides breathable air for initial response to emergency, and recovery activities when required~~
Respirators	242-A respirator storage room	Filtered air for recovery of known hazards

Modification Class: [1 2 3]	Class 1	Class [1]1	Class 2	Class 3
Please check one of the Classes:		X		

Relevant WAC 173-303-830, Appendix I Modification: A.1.

Enter wording of the modification from WAC 173-303-830, Appendix I citation
A. General Permit Provisions
1. Administrative and informational changes.

Submitted by Co-Operator:	Reviewed by RL Program Office:	Reviewed by Ecology:	Reviewed by Ecology:
3/24/03	3/26/03		
J. A. Van Vliet Date	G. H. Sanders Date	F. Jamison Date	L.E. Ruud Date

[1] Class 1 modifications requiring prior Agency approval.

[2] This is only an advanced notification of an intended Class [1]1, 2, or 3 modification, this should be followed with a formal modification request, and consequently implement the required Public Involvement processes when required.

[3] If the proposed modification does not match any modification listed in WAC 173-303-830 Appendix I, then the proposed modification should automatically be given a Class 3 status. This status may be maintained by the Department of Ecology, or down graded to [1]1, if appropriate.

Hanford Facility RCRA Permit Modification Notification

Part III, Chapter 5 and Attachment 35

242-A Evaporator

Quarter Ending March 31, 2003

Replacement Sections

Index

Chapter 4.0
Chapter 6.0
Chapter 7.0

CONTENTS

4.0 PROCESS INFORMATION ..... Att 35.4.1

4.1 TANK SYSTEMS ..... Att 35.4.2
4.1.1 Design Requirements ..... Att 35.4.2
4.1.2 Integrity Assessments ..... Att 35.4.7
4.1.3 Additional Requirements for Existing Tanks ..... Att 35.4.8
4.1.4 Secondary Containment and Release Detection for Tank Systems ..... Att 35.4.8
4.1.5 Variances from Secondary Containment Requirements ..... Att 35.4.13
4.1.6 Tank Management Practices ..... Att 35.4.14
4.1.7 Labels or Signs ..... Att 35.4.14
4.1.8 Air Emissions ..... Att 35.4.15
4.1.9 Management of Ignitable or Reactive Wastes in Tank Systems ..... Att 35.4.15
4.1.10 Management of Incompatible Wastes in Tank Systems ..... Att 35.4.15

4.2 AIR EMISSIONS CONTROL ..... Att 35.4.15
4.2.1 Applicability of Subpart AA Standards ..... Att 35.4.15
4.2.2 Process Vents - Demonstrating Compliance ..... Att 35.4.16

4.3 ENGINEERING DRAWINGS ..... Att 35.4.17

FIGURES

Figure 4.1. 242-A Evaporator Simplified Process Flow Diagram. ..... Att 35.4.19
Figure 4.2. 242-A Evaporator Process Loop. ..... Att 35.4.20
Figure 4.3. 242-A Evaporator Slurry System. ..... Att 35.4.21
Figure 4.4. 242-A Evaporator Process Condensate System. ..... Att 35.4.22
Figure 4.5. 242-A Evaporator Vacuum Condenser System. ..... Att 35.4.23
Figure 4.6. 242-A Evaporator Drain System. ..... Att 35.4.24

TABLE

Table 4.1. Chemical Composition of Clinoptilolite. ..... Att 35.4.7
Table 4.2. Process and Instrumentation Diagrams. ..... Att 35.4.17
Table 4.3. Drawings of 242-A Evaporator Secondary Containment Systems. ..... Att 35.4.18

This page intentionally left blank.

4.0 PROCESS INFORMATION

The 242-A Evaporator receives mixed waste from the DST System that contains inorganic and organic constituents and radionuclides. A 242-A Evaporator simplified process flow diagram is given in Figure 4.1. The 242-A Evaporator separates the mixed waste received from the DST System, generating the following waste streams:

- A concentrated aqueous waste stream (slurry) containing the nonvolatile components, including most of the radionuclides, inorganic constituents, and nonvolatile organics such as tri-butyl phosphate
- A dilute aqueous waste stream (process condensate) containing the volatile components, primarily water with low concentrations of radionuclides, inorganic constituents, and volatile constituents such as ammonia and acetone.

The slurry is routed back to the DST System pending further treatment. The process condensate is transferred to the LERF for storage until processed through the ETF.

The 242-A Evaporator process employs a conventional forced circulation, vacuum evaporation system to concentrate the DST System waste solution. The major components of this system include the reboiler, vapor-liquid separator, recirculation pump and pipe loop, slurry product pump, condenser, jet vacuum system, condensate collection tank, and an optional ion exchange system.

The vapor-liquid separator, C-A-1, also called the evaporator vessel, and the condensate collection tank, C-100, meet the definition of a tank in WAC 173-303-040. Other process equipment associated with these tank systems is considered ancillary equipment. Drawings that aid in understanding the systems are provided in Section 4.3.

The 242-A Evaporator receives waste from a DST System tank, 241-AW-102 that serves as the 242-A Evaporator feed tank. The feed enters the recirculation line and blends with the main process slurry stream, which is pumped to the reboiler.

In the reboiler, the mixture is heated to the specified operating temperature, normally 38 to 77°C, using 21 to 69 kilopascals gauge pressure steam. The low-pressure steam provides adequate heat input, and the resulting low-temperature differential across the reboiler minimizes scale formation on the heat transfer surfaces. The static pressure of the waste in the reboiler is sufficient to suppress the boiling point so the waste does not boil in the reboiler tubes. Boiling occurs only near or at the liquid surface in the vapor-liquid separator.

The heated slurry stream is discharged from the reboiler to the vapor-liquid separator (C-A-1) that typically is maintained at an absolute pressure of 5.3 to 10.7 kilopascals. Under this reduced pressure, a fraction of the water in the heated slurry flashes to steam and the steam is drawn through two wire mesh deentrainer pads into a 42-inch diameter vapor line that leads to the primary condenser, leaving behind a more concentrated slurry solution in the vapor-liquid separator.

After a brief residence time in the vapor-liquid separator, the slurry exits from the bottom through the lower recirculation line and is recirculated by the recirculation pump (P-B-1). The pump discharges the slurry back to the reboiler via the upper recirculation line, thus completing the recirculation loop.

The specific gravity of the waste liquid is monitored closely to ensure that the target density, established before the beginning of the campaign, is not exceeded. A portion of the slurry is removed from the upper recirculation line using the slurry pump (P-B-2) and transferred through an encased underground pipeline (pipe-within-a-pipe) to a designated slurry receiver tank in the DST System.

Vapors are drawn from the vapor-liquid separator through a 42-inch diameter vapor line and enter a series of three condensers where the vapors are condensed using raw water. The condensed vapors, called process condensate, are collected in tank C-100. Steam jets are used to create a vacuum on the

vapor-liquid separator drawing the process vapors into and through the condensers. Noncondensable vapors are drawn from the condensers through a series of particulate filters and vented to the atmosphere. The air discharges are monitored continuously when the 242-A Evaporator is operating to verify that standards for radionuclide and ammonia emissions are met.

Process condensate contains the volatile constituents of the waste and trace quantities of inorganic materials and radionuclides. The process condensate could be passed through an ion exchange column to reduce the radionuclide content if necessary. The process condensate is pumped from tank C-100 through an encased underground pipeline (pipe-within-a-pipe) to the LERF.

During a campaign, the evaporation process is continuous with typical feed flow rates of 260 to 450 liters per minute, process condensate flow rates of 150 to 230 liters per minute, and slurry flow rates of 110 to 230 liters per minute. The evaporator process is shutdown when the desired endpoint concentration of the slurry is met. Endpoints are established at the beginning of the campaign, based on allowable waste volume reduction (WVR) and defined operating limits. If the evaporation rate cannot achieve the desired endpoint, slurry in the DST System serving as the slurry receiver is transferred to the feed tank for one or additional passes through the 242-A Evaporator. At the end of each campaign, the 242-A Evaporator process equipment is shutdown, emptied, flushed with raw water, and placed in a safe standby mode.

Other discharges during 242-A Evaporator processing include condensate from the steam used to heat the waste and cooling water used to condense the vapors. The 242-A Evaporator is designed to prevent contamination of these streams. The fluids on the uncontaminated side of the heat exchangers are maintained at a higher pressure than the waste stream so that uncontaminated fluid migrates toward the contaminated waste if a leak were to occur. The steam condensate is discharged to the TEDF. The cooling water is monitored continuously for radiation and discharged to TEDF as long as the radiation limits are not exceeded. The steam condensate and cooling water streams were assessed in the stream specific reports (WHC 1990a and WHC 1990b) and are not dangerous waste in accordance with WAC 173-303.

The 242-A Evaporator process is controlled by the MCS. The MCS computer monitors all process parameters and controls the parameters where required. Once the configuration parameters and other process control inputs are set, the MCS functions independently of the operator, maintaining the process parameters within specified ranges by sending output signals that operate specific pieces of equipment (e.g., control valves).

4.1 TANK SYSTEMS

This section discusses information associated with design requirements, integrity assessments, and any additional requirements for tanks used to treat and store mixed waste in the 242-A Evaporator.

4.1.1 Design Requirements

The following design requirements are addressed in the *242-A Evaporator/Crystallizer Tank System Integrity Assessment Report* (IAR) (Attachment 35, Appendix 4B):

- Minimum design wall thicknesses and measured wall thicknesses at various points throughout the tank systems
- Design standards used in construction, including references
- Waste characteristics
- Materials of construction and compatibility of materials with the waste being processed
- Corrosion protection
- Seismic design basis evaluation.

The conclusion of the IAR is that the 242-A Evaporator system is not leaking and is fit for use. The inspections, tests, and analyses performed provide assurance that the tank system has adequate design, sufficient structural strength, and sufficient compatibility with the waste to not collapse, rupture, or fail during operation. The report also states that a review of construction files indicates that the building structure was designed and constructed to withstand a design-basis earthquake.

4.1.1.1 Vapor-Liquid Separator (C-A-1) and Ancillary Equipment

The following sections describe the vapor-liquid separator (C-A-1) and ancillary equipment.

Waste Feed System. Feed to the 242-A Evaporator is supplied via a pump located in the 241-AW-102 feed tank. The feed pump transfers the waste to the 242-A Evaporator through a 3-inch diameter carbon steel transfer pipeline encased in a 6-inch diameter carbon steel pipe to provide secondary containment. The feed pipeline is equipped with a leak detection system.

Samples can be taken from the waste feed when needed. The feed sampler (SAMP-F-1) is located in a sample enclosure located in the load out and hot equipment storage room.

Evaporator Process Loop. The 242-A Evaporator process loop equipment components are as follows:

- Reboiler (E-A-1)
- Vapor-liquid separator (C-A-1)
- Recirculation pump (P-B-1)
- Recirculation loop.

Figure 4.2 is a simplified process flow diagram showing the major components of the process loop.

Reboiler (E-A-1). Waste is heated as the waste passes through the reboiler before entering the vapor-liquid separator. The reboiler is a vertical tube unit with steam on the shell-side and process solution on the tube-side. The 364 tubes in the reboiler are enclosed in a 1.03-meter outside diameter, 4.6-meter-long stainless steel shell. Both the reboiler shell and tubes are constructed of 304L stainless steel. The shell is 0.64 centimeter thick and the tubes are 14-gauge steel. The reboiler is designed to distribute steam evenly and to prevent tube damage from water droplets that may be present in the steam.

Vapor-Liquid Separator (C-A-1). Process solution from the reboiler enters the vapor-liquid separator via the upper recirculation line. Some of the solution flashes into vapor, which exits through a vapor line at the top of the vapor-liquid separator. The remaining solution (slurry) exits through the recirculation line at the bottom.

The separator consists of a lower and upper section. The lower (liquid) section is a stainless steel shell 4.3 meters in diameter having an 85,200 to 94,600 liter normal operating capacity (including recirculation loop and reboiler). The maximum design capacity is 103,000 liters. The upper (vapor) section is a stainless steel shell 3.5 meters in diameter containing two deentrainment pads. These wire mesh pads remove liquids and solids that entrain into the vapor section of the vessel. Spray nozzles, using recycled process condensate or filtered raw water, wash collected solids from the deentrainment pads and vessel walls. Both sections of the vapor-liquid separator are constructed of 0.95-centimeter-thick stainless steel.

Pressure in the vapor-liquid separator is monitored to provide an indication of process problems such as slurry foaming, deentrainer flooding, or excessive vapor temperatures. Instrumentation also is available to monitor the liquid levels in the vapor-liquid separator. Interlocks are activated when high pressures or high- or low-liquid levels are detected, shutting down the evaporation process and placing the facility in a safe configuration.

The vapor-liquid separator and recirculation loop can be flushed to remove any residual solids from the system and/or to reduce radiation levels. The most common flush solution is water, but dilute nitric or citric acid solutions could be used. All acidic flush solutions are chemically adjusted to meet DST acceptance criteria before transfer to the DST System. The capability also exists to add an antifoam solution (at very low flow rates - approximately 0.04 to 0.4 liters per minute) to the vessel to prevent foaming. The antifoam solution is a noncorrosive, nonregulated silicone-based solution that is compatible with the evaporator components.

Recirculation Pump. The stainless steel recirculation pump (P-B-1), is constructed as part of the recirculation loop to the reboiler. The 28-inch diameter axial flow pump has a 60,900 liters per minute output. The recirculation pump is designed to handle slurry up to 30 percent undissolved solids by volume at specific gravities up to 1.8. The recirculation pump moves waste at high velocities through the reboiler to improve heat transfer, keep solids in suspension, and reduce fouling of the heat transfer surfaces.

The recirculation pump is equipped with shaft seals with high-pressure recycled process condensate (or water) introduced between the seals to prevent the waste solution from leaking out of the system. Seal water pressure and flow are monitored and controlled to shut down the recirculation pump if conditions are not adequate to prevent waste liquid from migrating into the seal water. The used seal water is routed to the feed tank.

Recirculation Loop. The recirculation loop consists of a 28-inch diameter stainless steel pipe that connects the vapor-liquid separator to the recirculation pump and reboiler. The lower loop runs from the bottom of the vapor-liquid separator to the recirculation pump inlet. The upper loop connects the pump discharge to the reboiler and the reboiler to the vapor-liquid separator. The feed line from the feed tank and the slurry line to underground storage tanks are connected to the upper recirculation line.

Slurry System. The slurry system draws a portion of the concentrated waste from the upper recirculation loop and transfers it to the DST System. The major components of the slurry system are the slurry pump and the slurry transfer pipelines. Figure 4.3 shows a simplified flow diagram of the slurry system. These components are described in the following paragraphs.

The slurry pump (P-B-2) is used to transfer slurry from the recirculation loop to the underground storage tanks. The pump is driven by a variable speed motor and is constructed of 304L stainless steel. The slurry pump is designed to generate high pressures to alleviate the possibility of a transfer line plugging.

Interlocks control the operation of the slurry pump. The slurry pump (P-B-2) is shutdown if any of the following occur:

- Excessive pressure is detected in the slurry lines to 241-AW Tank Farm
- A leak is detected in the secondary containment or cleanout boxes (COB) (COB-AW-1 and COB-AW-2) located on the slurry transfer lines
- A leak is detected in the 241-AW Tank Farm process pits where the transfer lines enter the DST System.

The slurry pump uses a shaft seal with recycled process condensate (or water) and pressure and flow controls similar to the system described above for the recirculation pump.

Transfer pipelines are 2-inch diameter, carbon steel encased lines which route slurry to a designated underground DST within the 200 East Area. All transfer pipelines are encased in a secondary containment pipe and equipped with leak detectors between the primary and encasement piping. The

pipelines are sloped to drain to the valve pit. The detection of any leak automatically shuts off the slurry pump.

The flow rate of the slurry transfer to the DST System is monitored and a decrease in flow below a specified value automatically will shut down the slurry pump (P-B-2) and initiate a line flush with water. The objective of flushing the transfer line is to prevent settling of solids, which precludes plugging the slurry transfer lines.

Samples can be taken from the slurry line when needed via a sampler (SAMP-F-2) that is located near the feed sampler in the load out and hot equipment storage room.

4.1.1.2 Condensate Collection Tank (C-100) and Ancillary Equipment

The following section discusses the condensate collection tank (C-100) and ancillary equipment. This equipment collects process condensate via the condensers in the vacuum condenser system, filters the condensate, removes additional radionuclides, if necessary, and pumps the process condensate to LERF. Figure 4.4 provides a simplified process flow diagram showing the major components of the process condensate system. The following major components make up the process condensate system:

- Vacuum condenser system
- Condensate collection tank (C-100)
- Process condensate pump (P-C-100)
- Condensate filters (F-C-1, F-C-2, and F-C-3)
- Ion exchange column (IX-D-1)
- Radiation monitoring and sampling system (RC-3)
- Seal pot
- Condensate Recycle System.

Vacuum Condenser System. Vapors removed from the vapor-liquid separator flow to a series of three condensers where the vapors are condensed using raw water. Condensate drains to the condensate collection tank (C-100). The vacuum condenser system consists of the following major components:

- Primary condenser (E-C-1)
- Intercondenser (E-C-2)
- Aftercondenser (E-C-3)
- Steam jet ejectors (J-EC1-1 and J-EC2-2).

Figure 4.5 provides a simplified process flow diagram showing the major components of the vacuum condenser system. These system components are discussed in the following sections.

Primary Condenser (E-C-1). Vapors drawn from the vapor-liquid separator flow through the 42-inch vapor line, into the E-C-1 condenser where the majority of the condensation takes place. Noncondensed vapors exit to the intercondenser (E-C-2) while the condensed vapors (process condensate) drain to the condensate collection tank (C-100). Cooling water passes through the cooling tubes and exits to TEDF.

The carbon steel condenser shell measures approximately 5.3 meters long and has a 2.2-meter inside diameter. The condenser consists of 2,950 equally spaced carbon steel tubes that are 3.6 meters long with a 1.9-centimeter outside diameter.

Intercondenser (E-C-2). Noncondensed vapors from E-C-1 enter the intercondenser. The vapor stream contacts the cooling tubes in the condenser where cooling water provides additional condensation. The condensate drains to the condensate collection tank (C-100). Noncondensed vapors and used cooling water are routed to the aftercondenser.

The carbon steel intercondenser measures 2.2 meters long with a 0.39 meter inside diameter. This heat exchanger contains 144 tubes that are 1.7 meters long with a 1.9-centimeter outside diameter.

Aftercondenser (E-C-3). Vapor discharged from the intercondenser enters the aftercondenser. Cooling is supplied to the aftercondenser by the cooling water from the intercondenser. Condensate is routed to the condensate collection tank (C-100), while the noncondensed vapors are filtered, monitored, and discharged to the atmosphere through the vessel ventilation system. The cooling water is discharged to TEDF.

The carbon steel aftercondenser measures 2.3 meters long and has a 0.20-meter inside diameter. This heat exchanger contains 45 tubes that are 1.8 meters long with a 1.9-centimeter outside diameter.

Steam Jet Ejectors. The vacuum that draws the vapors from C-A-1 into the condensers is created by a two-stage steam jet ejector system. The first-stage jet ejector (J-EC1-1) maintains a vacuum on the primary condenser, which in turn creates a vacuum on the vapor-liquid separator. The ejector consists of a steam jet, pressure controller, and air bleed-in valve. Steam and noncondensed vapors from the primary condenser are ejected from J-EC1-1 into the intercondenser. The desired vacuum is obtained by controlling steam pressure and bleeding ambient air as necessary into the vapor header through an air intake filter. The second-stage jet ejector (J-EC2-1) creates the vacuum that moves vapors from the intercondenser through the aftercondenser.

Condensate Collection Tank (C-100). Process condensate from the primary condenser, intercondenser, aftercondenser, and the vessel ventilation system drain to the condensate collection tank (C-100). The tank is 4.3 meters in diameter, 5.8 meters high, and is constructed of 0.79-centimeter-thick stainless steel. The tank has a maximum design capacity of 67,400 liters. Normal operating volume is approximately 50 percent of the tank capacity. A carbon steel base supports the tank. An agitator is installed but not used while pumping process condensate to LERF.

In the event of a tank overflow, the solution is routed through an overflow line to the drain system, which returns waste to the feed tank (241-AW-102). Overflow occurs when the volume exceeds about 60,600 liters. The overflow line is equipped with a liquid filled trap to isolate the drain system from the tank.

The potential exists for the condensate collection tank to receive small amounts of immiscible organics with the condensed waste. There is instrumentation installed on the condensate collection tank to detect a separate organic phase based on interface density at the surface of the waste in the tank. If detected, the organic is removed by overflowing tank C-100 back to the feed tank 241-AW-102. In addition, the liquid level in the tank is controlled well above the discharge pump intake point to ensure that an organic layer cannot be pumped to LERF.

Process Condensate Pump. A pump (P-C-100) moves the process condensate from tank C-100 through the condensate filter and the ion exchange column (if in service) to LERF. The process condensate pump is a centrifugal pump constructed of 316 stainless steel.

Condensate Filters. After leaving the condensate collection tank, the process condensate is filtered to remove solids. The primary condensate filter (F-C-1) has a welded steel housing. A second filter system (F-C-3), installed downstream of the ion exchange column, is also used to filter the process condensate. This system has duplex in-line filters in a cast iron housing. Only one of the filters is used at a time. Both filters employ a filter material that is compatible with the process condensate.

Ion Exchange Column. Ion exchange column (IX-D-1) is available to reduce the cesium and strontium content in the process condensate if necessary. The determination whether the column is needed is made

before the start of a campaign based on the evaluation of the expected radionuclide levels in the process condensate-using candidate feed tank data.

The ion exchange column is 1.2 meters in diameter and 4.9 meters high. The shell is 0.95 centimeters thick, A-36 carbon steel.

Clinoptilolite is used as the ion exchange media. Clinoptilolite is a zeolon material, which is a family of inorganic crystalline aluminosilicate compounds (Table 4.1). Clinoptilolite fines could cause partial plugging of the bed and an increase in the column differential pressure, restricting the flow of condensate. The column can be back flushed with process condensate or raw water to remove the fines. Spent ion exchange media is flushed to the feed tank (241-AW-102). Interlocks shutdown the process condensate pump, if excessive differential pressure is detected across the column or across the upper or lower screens that hold the clinoptilolite in the column.

Table 4.1. Chemical Composition of Clinoptilolite.

Components	Typical analysis percentage
SiO_2	72.2
Al_2O_3	12.9
CaO	0.8
MgO	0.5
Na_2O	3.7
K_2O	4.4
Fe_2O_3	0.7
MnO	0.024

Radiation Monitoring and Sampling. The process condensate transferred to LERF is monitored continuously for radiation. If radiation levels exceed established limits, an alarm is received and interlocks immediately divert the stream back to the condensate collection tank (or the feed tank) and shut off the process condensate pump. This ensures process condensate containing excessive radionuclides due to an accidental carryover from the vapor-liquid separator is not transferred to LERF.

Seal Pot. The condensate collection tank receives condensed liquids from the vessel ventilation system. A seal pot collects the drainage before discharge into the condensate collection tank and isolates the tank from the vessel ventilation system.

Condensate Recycle System. For waste minimization, a portion of the process condensate from tank C-100 is recycled for use as decontamination solution for the deentrainment pad sprays and seal water for the recirculation pump (P-B-1) and slurry pump (P-B-2). Use of process condensate instead of raw water results in approximately 10 percent reduction in waste volume generated during continuous operation of the 242-A Evaporator. Raw water also is available as a backup for sprays and seal water. A 2-inch diameter carbon steel line, stainless steel centrifugal pump (P-C106), and filters (F-C-5 and F-C-6) supply process condensate from tank C-100 to the pad sprays and pump seals. The filters are disposable cartridge filters in carbon steel housings arranged in parallel with one filter in service while the other is in standby.

4.1.2 Integrity Assessments

The IAR (Attachment 35, Appendix 4B) discusses:

- The standards used during design and construction of the 242-A Evaporator and the adequacy of those standards

- The characteristics of the DST waste processed
- The adequacy of the materials of construction to provide corrosion protection from the waste processed
- The age of the tanks and the affect of age on tank integrity
- The results of the leak tests, visual inspections, and tank wall thickness inspections
- The frequency and scope of future integrity assessment
- Deficiencies in secondary containment design. These deficiencies are discussed in Section 4.1.5.

The integrity assessment was certified by an independent, qualified registered professional engineer.

The inspections, tests, and analyses performed provide assurance that the 242-A Evaporator tank system has adequate design, sufficient structural strength, and sufficient compatibility with the waste to not collapse, rupture, or fail during operation. No evidence of degradation was noted during the visual test, ultrasonic test, or leak test. Both condensate collection tank C-100 and the vapor-liquid separator/reboiler loop passed leak tests. The frequency of subsequent integrity assessments will be established based on the results of the last integrity assessment.

4.1.3 Additional Requirements for Existing Tanks

Refer to information in Section 4.1.2 and the IAR , which includes measuring tank wall thicknesses, evaluating corrosion protection, and performing leak tests, have been discussed in.

4.1.4 Secondary Containment and Release Detection for Tank Systems

This section describes the design and operation of secondary containment sumps, drain lines, and leak detection systems for the 242-A Evaporator.

4.1.4.1 Requirements for All Tank Systems

The *Construction Specification for 242-A Evaporator-Crystallizer Facilities Project B-100* (Vitro 1974) was used during preparation, design, and construction of the tank and secondary containment systems. Table 2 of the IAR details how the construction specification relates to the national codes and standards.

Constructing the building and vessels per this specification ensures that foundations are capable of supporting tank and secondary containment systems and that uneven settling and failures from pressure gradients do not occur. The IAR states that the 242-A Evaporator "...has adequate design, sufficient structural strength, and sufficient compatibility with the wastes to not collapse, rupture, or fail during service loads associated with normal operations" and "...the building structure was designed and constructed to withstand a design basis earthquake".

Section 2.2.7 of the IAR describes the building and secondary containment system. This system is designed to ensure any release is detected within 24 hours. The secondary containment system also is designed to contain 100 percent of the maximum operating capacity of the vapor-liquid separator/reboiler loop, and the drain systems are sloped to allow collection of solution and have sufficient capacity to drain this volume in less than the required 24 hours.

Section 2.2.7 of the IAR describes the protective coating material and sealant used to protect concrete and joints from attack by leaks to the secondary containment. The materials of construction for the sump and drain lines are also compatible with the waste processed at the 242-A Evaporator.

4.1.4.2 242-A Building Secondary Containment

The 242-A Building serves as a secondary containment vault for the vapor-liquid separator (C-A-1), condensate collection tank (C-100), and ancillary equipment used for transferring mixed waste at the 242-A Evaporator. The concrete for the operating area was poured to form a monolithic structure. Where needed, joints in the concrete were fabricated with preformed filler conforming to the standards of the American Society of Testing and Materials. Joint filler is sealed with a polysulfide sealant per the requirements of the construction specifications (Vitro 1974).

Before restart in 1994, a new acrylic special protective coating was applied to the concrete in the pump, evaporator, and condenser rooms. The coating meets the requirements of the construction specifications (Vitro 1974), including resistance to very high radiations doses, temperatures of 77° C, and spills of 25 percent caustic solution.

The following five rooms contain equipment used to process mixed waste:

- Pump room
- Evaporator room
- Condenser room
- Ion exchange room
- Load out and hot equipment storage room.

4.1.4.2.1 Pump Room

The pump room secondary containment walls are 0.38- to 0.56-meter-thick reinforced concrete. The secondary containment floor is 0.51-meter-thick reinforced concrete. The pump room floor is lined with 0.64-centimeter stainless steel and the concrete walls and ceiling cover blocks are painted with a special protective coating. The pump room contains pipe jumpers used to transport feed and slurry solutions between the vapor-liquid separator and the DST System, and the process recirculation loop, recirculation pump (P-B-1), and slurry pump (P-B-2).

Leaks in the pump room collect in the pump room sump, a 1.5-meter by 1.5-meter by 1.8-meter deep sump with a 0.64-centimeter stainless steel liner. The pump room sump collects spills from various sources for transfer to the feed tank, 241-AW-102. Figure 4.6 provides a simplified process flow schematic of sources, which drain to the pump room sump. Drainage to the sump includes:

- Leaks to the pump room floor from equipment in the pump room
- Evaporator room floor drain
- Load out and hot equipment storage room floor drain
- Loading room floor drain
- Decontamination room sump drains (including feed and slurry sampler drains)
- Raw water backflow preventer drain.

Solution in the pump room sump is transferred to the feed tank (241-AW-102) using a steam jet. A 10-inch secondary containment overflow line is provided for draining large volumes of solution should a catastrophic tank failure occur. Because the overflow line provides a direct path between the air space of tank 241-AW-102 and the pump room, a minimum level of water must be maintained in the sump to prevent cross ventilation. A leak into the pump room sump would be detected by a rise in the sump level. Instrumentation provided alarms on high sump level.

The recirculation and slurry pumps in the pump room are equipped with mechanical seals having pressurized water introduced between the seals. The seal water is maintained at a pressure that exceeds the process pressure at the seal to ensure water leaks into the process solution, but waste solution does not

leak out. Water from seal leakage is collected in funnels in the pump room and routed to feed tank 241-AW-102 via the 10-inch overflow line described previously.

4.1.4.2.2 Evaporator Room

The evaporator room secondary containment walls are 0.56-meter-thick reinforced concrete. The secondary containment floor is 0.51-meter-thick reinforced concrete. The evaporator room contains the vapor-liquid separator vessel (C-A-1), part of the recirculation loop, the reboiler, the 42-inch vapor line, and line used to empty the vapor-liquid separator to feed tank 241-AW-102.

Leaks in the evaporator room flow to a floor drain that routes through a 3-inch line to the pump room sump described in Section 4.1.4.2.1. A leak in the evaporator room would be detected by a rise in the pump room sump level. The floor of the evaporator room and a portion of the pump room floor are 3.0 meters below grade to contain the entire contents of the vapor-liquid separator, reboiler, and recirculation loop in the event of a catastrophic failure. The floor and walls of the evaporator room up to an elevation of 1.8 meters are painted with a special protective coating.

4.1.4.2.3 Condenser Room

The condenser room secondary containment walls are 0.36- to 0.56-meter-thick reinforced concrete. The secondary containment floor is 0.51-meter-thick reinforced concrete. The condenser room contains all the components of the process condensate system described in Section 4.1.1.2, including tank C-100. The exception is the ion exchange column, which is located in a separate room.

Leaks in the condenser room flow to two floor drains that join and route through a 6-inch line to feed tank 241-AW-102. Leaks in the condenser room are detected by the following:

- Unexpected changes in liquid level in tank C-100. Instrumentation is provided to monitor liquid level in the tank, including high- and low-level alarms.
- Daily visual inspections of process condensate system components and piping.

The floor and walls of the condenser room up to an elevation of 1.2 meters are painted with a special protective coating.

4.1.4.2.4 Ion Exchange Room

The ion exchange room secondary containment walls are 0.30-meter-thick reinforced concrete. The secondary containment floor is 0.13-meter-thick-reinforced concrete. The room contains the ion exchange column (IX-D-1), which could be used to provide further radionuclide decontamination of the process condensate. The room also contains a line to empty the column to tank 241-AW-102. This double-encased line leaves the building and combines with the pump room sump overflow line.

Leaks in the ion exchange room flow to a floor drain that connects with the condenser room drain line routed to feed tank 241-AW-102. Leaks are detected by opening the hatch between the condenser room and the ion exchange room daily when the ion exchange column is in service and performing a visual inspections of the piping and floor drain. The floor, walls, and ceiling of the room are completely painted with a special protective coating.

4.1.4.2.5 Load out and Hot Equipment Storage Room

The load out and hot equipment storage room secondary containment walls are 0.30- to 0.56-meter-thick reinforced concrete. The secondary containment floor is 0.15-meter-thick reinforced concrete. The room

contains two recirculation lines and samplers used to sample the feed and slurry streams. The lines and samplers are located in a shielded enclosure adjacent to the pump room wall.

The load out and hot equipment storage room contains two sumps: the drain sump and decontamination sump. The sumps are 0.91 meter in diameter, about 1.2 meters deep, and lined with stainless steel. Both sumps drain via a 3-inch drain line to the pump room sump described in Section 4.1.4.2.1. The sumps, floor, and walls of the load out and hot equipment storage room up to an elevation of 3.8 meters are painted with a special protective coating.

Leaks in the sampler piping, flow into two drains in the sample enclosure, which drain via a 2-inch line to the decontamination sump, which drains to the pump room sump (described in 4.1.4.2.1). Leaks in the sampler piping are detected by leak detectors in the sampler enclosures or a rise in the pump room sump level.

4.1.4.2.6 242-A Building Drain Lines

Figure 4.6 provides a simplified process flow schematic of sources routed to the 242-A Building drain lines. Three lines serve to drain the 242-A Building and equipment to feed tank 241-AW-102:

- Pump room sump drain line (DR-334): a 10-inch carbon steel line that transfers overflow and empty-out of the pump room sump
- Vapor-liquid separator vessel drain line (DR-335): a 10-inch carbon steel line that allows gravity drain of the vessel to the feed tank
- Condenser room drain line (DR-343): a 6-inch carbon steel line that drains leakage from the condenser room and ion exchange room.

In addition, the ion exchange column drain has a separate drain line (DR-338) that also routes process condensate that has been diverted because of high radiation levels. This 3-inch carbon steel line exits the building and connects with the pump room sump drain line (DR-334) outside of the building.

The three lines are sloped to drain about 170 meters to feed tank 241-AW-102 via the drain pit (241-AW-02D). Although WAC 173-303-640(1)(c) exempts systems that serve as secondary containment from requiring secondary containment, drain lines DR-334, DR-335, and DR-338 have outer encasement piping.

The drain lines are connected to a cathodic protection system to prevent external corrosion from contact with the soil. The cathodic protection system consists of:

- A rectifier that converts supplied alternating current voltage to an adjustable direct current voltage
- Numerous anodes buried near the underground piping and connected to the rectifier.
- Return wiring that connects the piping to the rectifier, completing the circuit.

The rectifiers are inspected to component degradation has not occurred. Test stations along the system are checked annually to verify 0.85 volt is maintained on the system, as required by the National Association of Corrosion Engineers. These inspections are discussed in Attachment 35, Chapter 6.0.

4.1.4.3 Transfer Line Containment

This section describes the design and operation of secondary containment and leak detection systems for transfer lines between the DST System and the 242-A Evaporator. The transfer line for process

condensate to LERF also has secondary containment and a leak detection system (DOE/RL-97-03). The transfer lines are protected with the same cathodic protection system described in Section 4.1.4.2.6.

4.1.4.3.1 Feed Line Piping

Two feed lines (SN-269 and SN-270) (one in service and one spare), each consist of 3-inch transfer piping within a 6-inch secondary containment encasement piping. Both the transfer and encasement pipes are constructed of Schedule 40 carbon steel. The lines run below grade about 120 meters from pump pit 241-AW-02E (above feed tank 241-AW-102) to the 242-A Building.

To detect transfer-piping failures, leak detector risers equipped with conductivity probes are installed on the encasement lines. The transfer piping and encasements are sloped towards the conductivity probe, which, on leak detection, annunciates an alarm in the 242-A Evaporator control room. A valve in the pump pit (241-AW-02E) can be opened to drain solution from the encasement pipe into the pit, which drains to feed tank 241-AW-102.

4.1.4.3.2 Slurry Line Piping

The slurry pump (P-B-2) transfers solution through one of two transfer lines: SL-167, for transfer to valve pit 241-AW-B (standard configuration), or SL-168 for transfer to valve pit 241-AW-A (alternate configuration, presently out of service). Slurry solution can be routed via double-encased piping from these valve pits to any designated DST slurry receiver. Both slurry transfer lines consist of 2-inch transfer piping within a 4-inch secondary containment encasement piping. Both the transfer and encasement pipes are constructed of Schedule 40 carbon steel. The lines run below grade about 73 meters between the 242-A Building and the valve pits.

These slurry lines contain leak detector risers and conductivity probes similar to the feed line piping described in Section 4.1.4.3.1.

Each slurry line has four COBs located along their length. The COBs were installed to allow the introduction of a 'water snake' to dislodge plugs in the slurry line. Because of difficulties encountered in there use and the low frequency with which plugging occurs, the COBs are no longer used; however, the COBs still form part of the primary containment for the slurry transfer lines. Each COB has three 1-inch carbon steel lines. Two lines are connected to the slurry line for cleanout, while a third line, connects via a 2-inch encasement pipe to the feed transfer line for drainage. The three lines extend to sealed flanges at ground level.

Secondary containment for each COB is provided by a 0.63-centimeter-thick carbon steel plate caisson (measuring 0.6 meter in diameter and 0.6 meter high) mounted on a 0.3-meter diameter carbon steel riser. Each caisson has a flange cover and vent line to prevent pressure buildup in the secondary confinement air space.

To drain liquids that might collect in the COB secondary containment, a 1-inch diameter floor drain line and valve are provided. When the drain valve is opened, solution in the COB drains to the slurry line secondary containment encasement piping. Leaks are detected by a conductivity probe mounted to the floor of the COB, which annunciates in the 242-A Evaporator control room.

4.1.4.4 Additional Requirements for Specific Types of Systems

This section addresses additional requirements in WAC 173-303-640 for vault systems like the 242-A Building to ensure no buildup of ignitable vapors nor infiltration of precipitation occurs. This

section also addresses secondary containment for ancillary equipment and piping associated with the tank systems.

4.1.4.4.1 Vault Systems

The 242-A Building is a vault constructed partially below ground, providing secondary containment for the tank systems. The DST System waste processed at the 242-A Evaporator is designated ignitable and reactive because of the presence of nitrite and nitrate salts, which are considered oxidizers per 49 CFR 173. Because of their low volatility, these compounds are unlikely to be present in the vapor phase of the tank systems at the 242-A Evaporator. However, to prevent the spread of contamination, the vapor-liquid separator (C-A-1) is ventilated and maintained at lower air pressure than the building air space. This ensures air leakage is from uncontaminated building air space into the tank vapor space. Vapors from the vapor-liquid separator flow to the vacuum condenser system described in Section 4.1.1.2.

The condensate collection tank (C-100), collects process condensate that is not designated ignitable nor reactive.

The tank systems and ancillary equipment are located within the 242-A Building, which is completely enclosed to prevent run-on and infiltration of precipitation into the secondary containment system.

4.1.4.4.2 Ancillary Equipment

The 242-A Building provides secondary containment for ancillary equipment. Double containment is provided for the feed and slurry transfer lines between the 242-A Building and the AW Tank Farm by pipe-in-pipe arrangements. Therefore, all ancillary equipment has secondary containment and the daily inspection requirements in WAC 173-303-640(4)(f) are not applicable.

4.1.5 Variances from Secondary Containment Requirements

Section 7.2 of the IAR discusses the following three deficiencies associated with the secondary containment system:

Pump Room Sump. The pump room sump does not comply with secondary containment requirements because liquid must be kept in the sump to provide a seal to prevent airflow between the pump room and feed tank 241-AW-102. Although the sump has a 0.63-centimeter-thick stainless steel liner to prevent corrosion of the concrete floor, the sump does not have secondary containment.

Routine Discharges through Secondary Containment. The configuration of the 242-A Evaporator process requires routine, batch discharges of dangerous waste through secondary containment drain lines. These routine discharges include the following.

- Steam condensate, cooling water, and process condensate sample stations drain to the feed tank, 241-AW-102, through drain line DR-343. Total discharge is about 38 liters per month during operation.

- Sample bottle water sprays down in the feed and slurry sample stations drain to the decontamination sump in the load out and hot equipment storage room. The decontamination sump then drains to the pump room sump. Total discharge is about 76 liters per month during operation.

- Ion exchange column back flushed with water drains through line DR-338 to the feed tank 241-AW-102. Back flushes are performed as needed when the ion exchange column is in use.

Transfer Piping Wall Penetrations. Three dangerous waste transfer line piping sections passing through the 242-A Building wall are single-walled, i.e., no secondary confinement in the wall (about 56-centimeter-thick reinforced concrete).

These deficiencies were identified to Ecology in a presentation on October 28, 1993 and a letter response from Ecology was provided (Ecology 1993). The response stated, "No physical revision of the pipe wall penetrations or the floor drains in the evaporator pump room will be required prior to evaporator restart." The letter required the following.

- "If at any time leakage is seen or detected from either of these installations, or if for any reason these installations are repaired or rebuilt, they will be rebuilt or repaired in accordance with regulations."

- "Should a spill occur in the evaporator pump room, the sump and the piping shall be rinsed three times as required in WAC 173-303-160 as appropriate. "Appropriate" in this case means that the original regulation was written for a free container, not a sump, so that judgment will have to be used in the application of the regulation. The rinsate shall be transferred to the double-shell tanks."

4.1.6 Tank Management Practices

All waste to be processed at the 242-A Evaporator must be sampled to determine if the waste is compatible with the materials of construction at the 242-A Evaporator. Before each campaign, candidate feed tanks are sampled per the requirements of the waste analysis plan (Attachment 35, Chapter 3.0). Based on the results, three possible options are implemented.

- The waste is acceptable for processing without further actions.

- The waste is unacceptable for processing as a single batch, but is acceptable if blended with other waste that is going to be processed.

- The waste is unacceptable for processing.

The 242-A Evaporator process is controlled by the MCS. The MCS computer monitors liquid levels in the vapor-liquid separator (C-A-1) and condensate collection tank (C-100) and has alarms that annunciate on high-liquid level to notify operators that actions must be taken to prevent overfilling of these vessels.

An interlock is activated when high-liquid level in the vapor-liquid separator (C-A-1) is detected, automatically shutting down the feed transfer pump at feed tank 241-AW-102, thereby preventing overfilling of the vessel and carryover of slurry into the process condensate system. The condensate collection tank (C-100) has an overflow line that routes solution to feed tank 241-AW-102 in case of overfilling.

Process and instrumentation drawings are listed in Section 4.3.

4.1.7 Labels or Signs

A labeling upgrade was completed before restart in 1994 for tank C-100 to identify the waste contents and major risks associated with waste stored within the tank. Tank C-100 ancillary piping is labeled "PROCESS CONDENSATE" to alert trained personnel which pipes in the condenser room contain dangerous waste. The vapor-liquid separator (C-A-1) is located in the evaporator room, a normally unoccupied area. This area is posted as a high radiation area with access controlled and limited to trained personnel only. The tank labels are visible from the walls of the tank enclosure rooms, which are less than 15 meters from the tank systems; therefore, label visibility requirements are met.

4.1.8 Air Emissions

Tank systems that contain extremely hazardous waste, and is acutely toxic by inhalation must be designed to prevent the escape of such vapors. The DST System waste in the vapor-liquid separator, C-A-1, is designated extremely hazardous waste; however, no determination has been performed to determine if the waste is acutely or chronically toxic. Most of the toxic compounds in the DST waste are not volatile, but because of the high radioactivity of the waste, controls are included to prevent or mitigate the release of tank vapors. The vapor-liquid separator is maintained under vacuum to ensure air leakage is from uncontaminated building air space into the tank vapor space. The boiling vapor in C-A-1 passes through deentrainment pads and sprays to prevent liquid and solid carryover into the vapor section of the tank. The vapor stream passes through three condensers that remove the condensable components. The noncondensable vapors pass through HEPA filters before being discharged to the environment.

4.1.9 Management of Ignitable or Reactive Wastes in Tank Systems

Although the DST System waste reprocessed at the 242-A Evaporator is designated ignitable because of the presence of oxidizers (nitrates and nitrites), the waste does not meet the definition of a combustible or flammable liquid given in National Fire Protection Association (NFPA) code number 30 (NFPA 1996). The buffer zone requirements in NFPA-30, which require tanks containing combustible or flammable solutions be a safe distance from each other and from public way, are not applicable.

An analysis is performed on the DST System waste to be processed to verify the waste does not react exothermically at the elevated temperatures at the 242-A Evaporator. The waste analysis plan (Attachment 35, Chapter 3.0) discusses waste acceptance requirements due to reactive waste designation.

4.1.10 Management of Incompatible Wastes in Tank Systems

Data Quality Objectives for Tank Farm Waste Compatibility Program (WHC 1995a) was established to ensure that waste transferred within the DST System is compatible before mixing. Waste transferred to the 242-A Evaporator also must meet these requirements. Waste compatibility with tank system construction material is discussed in Section 4.3.3 of the IAR (Attachment 35, Appendix 4B). The waste analysis plan (Attachment 35, Chapter 3.0) also includes waste compatibility requirements.

4.2 AIR EMISSIONS CONTROL

This section addresses the requirements of Air Emission Standards for Process Vents, under Subpart AA (incorporated by reference in WAC 173-303-690).

4.2.1 Applicability of Subpart AA Standards

The 242-A Evaporator performs distillation that specifically requires evaluation of process vents for the applicability of 40 CFR 264 Subpart AA.

Waste processed at the 242-A Evaporator routinely contains greater than 10 parts per million organic concentrations; therefore, organic air emissions are subject to 40 CFR 264.1032, which requires organic emissions from all affected vents at the Hanford Facility be less than 1.4 kilograms per hour and 2.8 megagrams per year, or control devices be installed to reduce organic emissions by 95%. For a list of applicable vents at the Hanford Facility, refer to the Attachment 33, *General Information Portion*, Chapter 4.0 (DOE/RL-91-28).

The 242-A Evaporator has one process ventilation system that vents both the vapor-liquid separator (C-A-1) and the condensate collection tank (C-100). The vent lines from both tanks combine before entering an off-gas system consisting of a deentrainer, a prefilter/demister, HEPA filters, and an exhaust fan. The vessel vent off-gas system is located on the third floor of the condenser room, with the exhaust stack extending horizontally through the east wall of the building at an elevation of 14.7 meters above ground level. The exhaust stack bends to run vertically with the discharge point 18.6 meters above ground level.

The annual average flow rate for the vessel vent is given in *Radionuclide Air Emissions Report for the Hanford Site - Calendar Year 1995* (DOE-RL 1996) as 18 cubic meters per minute and the total annual flow was 9.6 E+06 cubic meters. During waste processing, the airflow is about 20.5 cubic meters per minute, with about 4.3 cubic meters per minute ventilated from tank C-100 and the remainder from the vapor-liquid separator and air inleakage.

Organic emissions occur during waste processing, which is less than 6 months (182 days) each year. This is the maximum annual operating time for the 242-A Evaporator, as shutdowns are required during the year for maintenance outages, candidate feed tank analysis, and establishing transfer routes for staging waste in the DST System. The total operating time for the two campaigns in 1994 was 86 days.

4.2.2 Process Vents - Demonstrating Compliance

This section outlines how the 242-A Evaporator complies with the requirements of 40 CFR 264, Subpart AA, including a discussion of the basis for meeting the organic emission limits, calculations demonstrating compliance, and conditions for reevaluating compliance.

4.2.2.1 Basis for Meeting Limits/Reductions

The TSD units at the Hanford Facility subject to 40 CFR 264, Subpart AA meet the organic air emission limits of 1.4 kilograms per hour and 2.8 megagrams per year, established in 40 CFR 264.1032, by the design of the facility. The 242-A Evaporator and the other TSD units collectively can meet these standards without the use of air pollution control devices.

4.2.2.2 Demonstrating Compliance

Process vent organic air emissions are controlled by establishing limits for acceptance of waste at the 242-A Evaporator. Before startup of each campaign, the waste to be processed is sampled in the DST System to determine the organic content. If the concentrations of organic constituents are less than the limits in the waste analysis plan (Attachment 35, Chapter 3.0), the waste can be processed, provided the Hanford Facility will not exceed 1.4 kilograms per hour and 2.8 megagrams per year. The waste acceptance limits in the waste analysis plan are based on equilibrium calculations and assumptions given in *Organic Emission Calculations for the 242-A Evaporator Vessel Vent System* (WHC 1996). The calculation to determine organic emissions consists of the following steps:

1. Determine the emission rate of each candidate feed tank organic constituent by multiplying the constituent concentration by the corresponding partition factor in *Organic Emission Calculations for the 242-A Evaporator Vessel Vent System* (WHC 1996).

2. Sum the emission rates of all organic constituents to determine the emission rate for the candidate feed tank. The maximum emission rate for the campaign is the rate from the candidate tank with the greatest emission rate.

3. Determine the total amount of emission during the campaign by using operating time and a weighted average emission rate, based on the volume of each candidate feed tank processed.

The organic emission rates and quantity of organics emitted during the campaign are determined using these calculations and are included in the operating record for each campaign, as required by 40 CFR 264.1035. The Hanford Facility has a system to ensure organic emissions from units subject to 40 CFR 264, Subpart AA are less than the limits of 1.4 kilograms per hour and 2.8 megagrams per year. Records documenting total organic emissions are available for Ecology review on request.

4.2.2.3 Reevaluating Compliance with Subpart AA Standards

Calculations to determine compliance with Subpart AA will be reviewed when any of the following conditions occur at the 242-A Evaporator:

- Changes in the configuration or operation that affect the assumptions given in *Organic Emission Calculations for the 242-A Evaporator Vessel Vent System* (WHC 1996).
- Annual operating time exceeds 182 days.

4.3 ENGINEERING DRAWINGS

The drawings in Table 4.2 are process and instrumentation diagrams for the systems at the 242-A Evaporator that contact mixed waste. These drawings are provided for general information and to demonstrate the adequacy of the design of the tank systems.

Table 4.2. Process and Instrumentation Diagrams.

System	Drawing Number	Drawing Title
Vapor-Liquid Separator	H-2-98988 Sheet 1	P & ID Evaporator Recirc System
Reboiler/Recirculation Line	H-2-98988 Sheet 2	P & ID Evaporator Recirc System
Slurry System	H-2-98989 Sheet 1	P & ID Slurry System
Condensate Collection Tank	H-2-98990 Sheet 1	P & ID Process Condensate System
Secondary Containment Drain System	H-2-98995 Sheet 1	P & ID Drain System
Secondary Containment Drain System	H-2-98995 Sheet 2	P & ID Drain System
Condensers	H-2-98999 Sheet 1	P & ID Vacuum Condenser System
Pump Room Sump	H-2-99002 Sheet 1	P & ID Jet Gang Valve System
Condensate Recycle System	H-2-99003 Sheet 1	P & ID Filtered Raw Water System

The drawings in Table 4.3 are for secondary containment systems for the 242-A Evaporator. Because secondary containment systems are the final barrier for preventing the release of dangerous waste into the environment, modifications that affect the secondary containment systems will be submitted to the Washington State Department of Ecology, as a Class 1, 2, or 3 permit modification, as required by WAC 173-303-830.

Table 4.3. Drawings of 242-A Evaporator Secondary Containment Systems.

System	Drawing Number	Drawing Title
242-A Building	H-2-69277 Sheet 1	Structural Foundation Plan Sections & General Notes - Areas 1 & 2
	H-2-69278 Sheet 1	Structural Foundation Elevations & Details - Areas 1 & 2
	H-2-69279 Sheet 1	Structural First Floor Plan & AMU - Areas 1 & 2
Pump Room Sump Drainage	H-2-69352 Sheet 1	Sections Process Waste Drainage
242-A Building Drainage	H-2-69354 Sheet 1	Plan Process Waste Drainage
Pump Room Sump	H-2-69369 Sheet 1	Pump Room Sump Assembly & Details

Piping Abbreviations			
AF	Anti-Foam	PS	Process Sewer
AS	Air Sample	PW	Process Waste
DECO	Decontamination	RW	Raw Water
DR	Drain	SC	Steam Condensate
EF	Evaporator Feed	SL	Slurry
EL	Eluant	STM	Steam
FRW	Filtered Raw Water	SW	Sanitary Water
I	Instrument	U	Utility
IA	Instrument Air	CW	Cooling Water
OVFL	Overflow	V	Vent
PA	Process Air	VAC	Vacuum
PC	Process Condensate	VV	Vessel Vent
CR	Condensate Recycle		

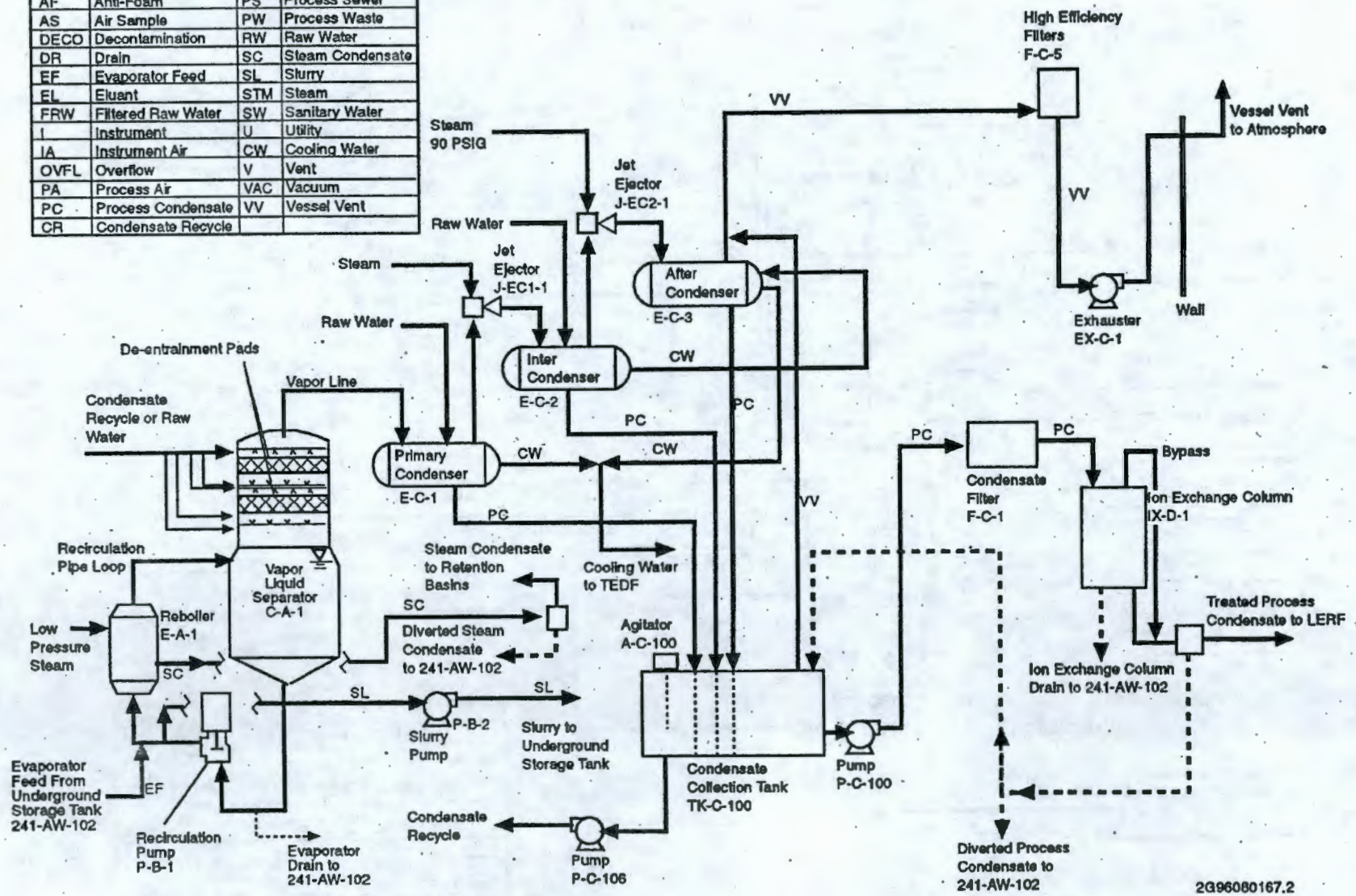

Figure 4.1. 242-A Evaporator Simplified Process Flow Diagram.

AF	Anti-Foam	PS	Process Sewer
AS	Air Sample	PW	Process Waste
DECO	Decontamination	RW	Raw Water
DR	Drain	SC	Steam Condensate
EF	Evaporator Feed	SL	Slurry
EL	Eluant	STM	Steam
FRW	Filtered Raw Water	SW	Sanitary Water
I	Instrument	U	Utility
IA	Instrument Air	CW	Cooling Water
OVFL	Overflow	V	Vent
PA	Process Air	VAC	Vacuum
PC	Process Condensate	VV	Vessel Vent
CR	Condensate Recycle		

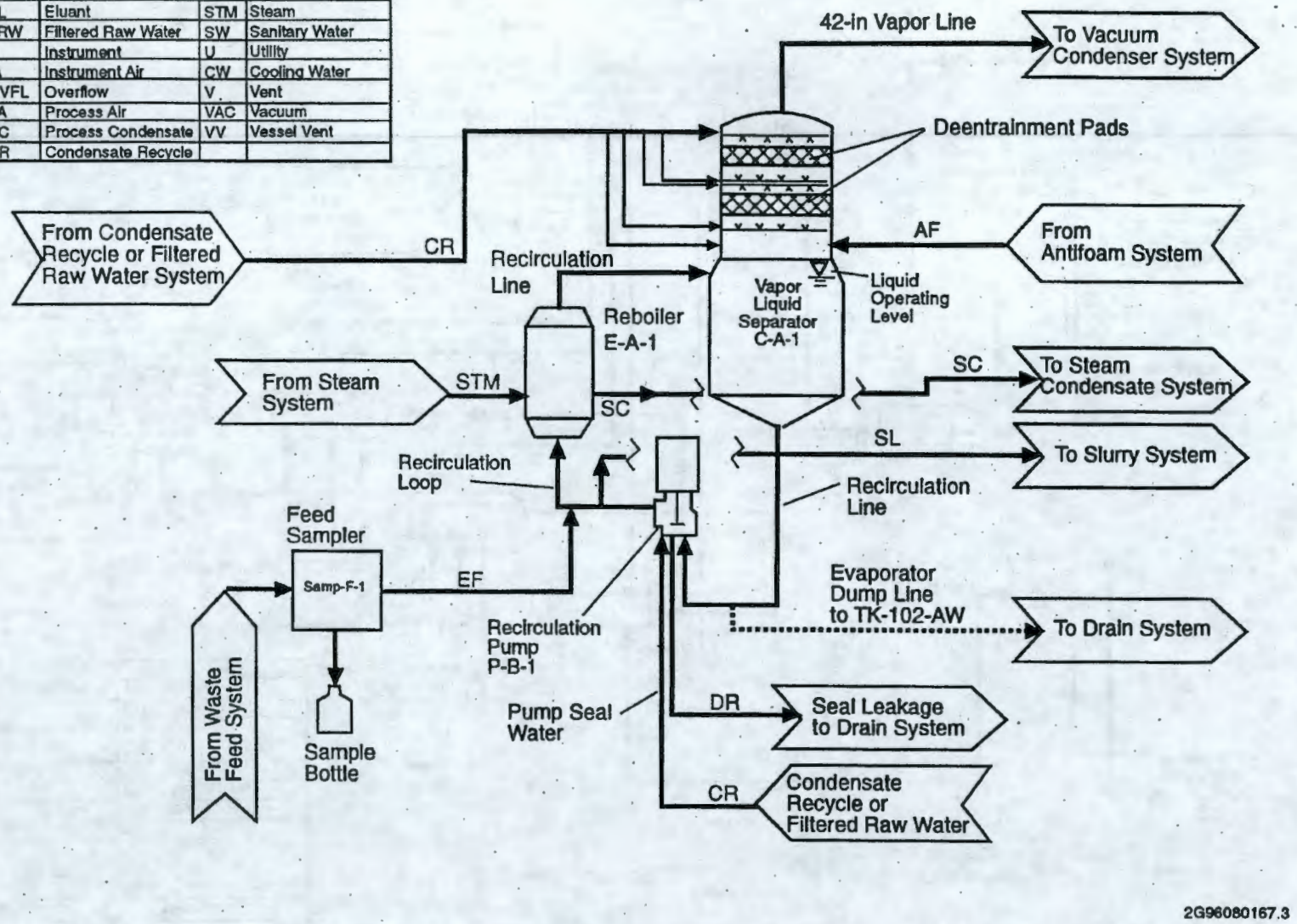

Figure 4.2. 242-A Evaporator Process Loop.

Piping Abbreviations			
AF	Anti-Foam	PS	Process Sewer
AS	Air Sample	PW	Process Waste
DECO	Decontamination	RW	Raw Water
DR	Drain	SC	Steam Condensate
EF	Evaporator Feed	SL	Slurry
EL	Eluant	STM	Steam
FRW	Filtered Raw Water	SW	Sanitary Water
I	Instrument	U	Utility
IA	Instrument Air	CW	Cooling Water
OVFL	Overflow	V	Vent
PA	Process Air	VAC	Vacuum
PC	Process Condensate	VV	Vessel Vent
CR	Condensate Recycle		

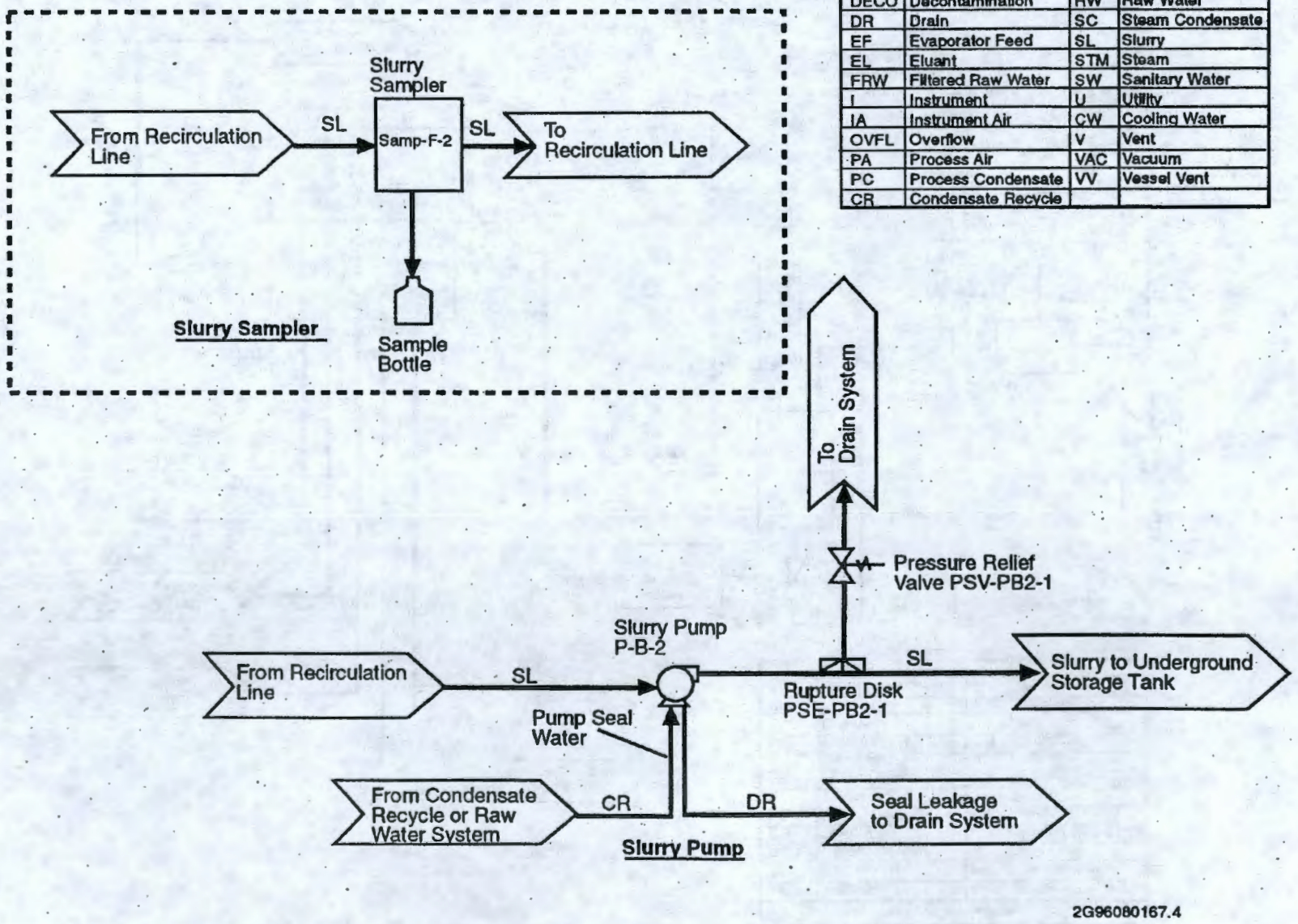

Figure 4.3. 242-A Evaporator Slurry System.

Piping Abbreviations			
AF	Anti-Foam	PS	Process Sewer
AS	Air Sample	PW	Process Waste
DECO	Decontamination	RW	Raw Water
DR	Drain	SC	Steam Condensate
EF	Evaporator Feed	SL	Slurry
EL	Eluant	STM	Steam
FRW	Filtered Raw Water	SW	Sanitary Water
I	Instrument	U	Utility
IA	Instrument Air	CW	Cooling Water
OVFL	Overflow	V	Vent
PA	Process Air	VAC	Vacuum
PC	Process Condensate	VV	Vessel Vent
CR	Condensate Recycle		

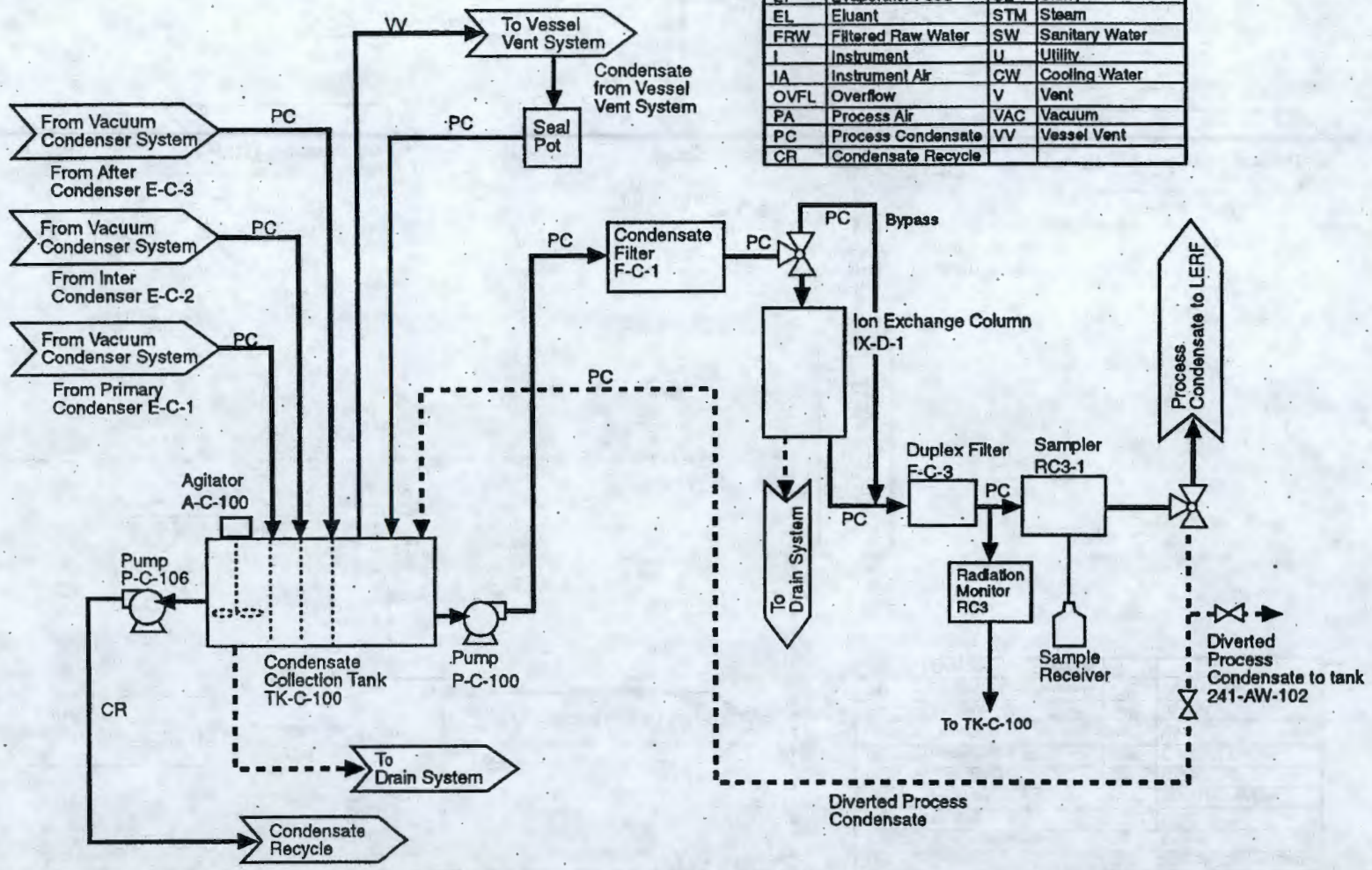

LERF = Liquid Effluent Retention Facility.

Figure 4.4. 242-A Evaporator Process Condensate System.

Piping Abbreviations			
AF	Anti-Foam	PS	Process Sewer
AS	Air Sample	PW	Process Waste
DECO	Decontamination	RW	Raw Water
DR	Drain	SC	Steam Condensate
EF	Evaporator Feed	SL	Slurry
EL	Eluant	STM	Steam
FRW	Filtered Raw Water	SW	Sanitary Water
I	Instrument	U	Utility
IA	Instrument Air	CW	Cooling Water
OVFL	Overflow	V	Vent
PA	Process Air	VAC	Vacuum
PC	Process Condensate	VV	Vessel Vent
CR	Condensate Recycle		

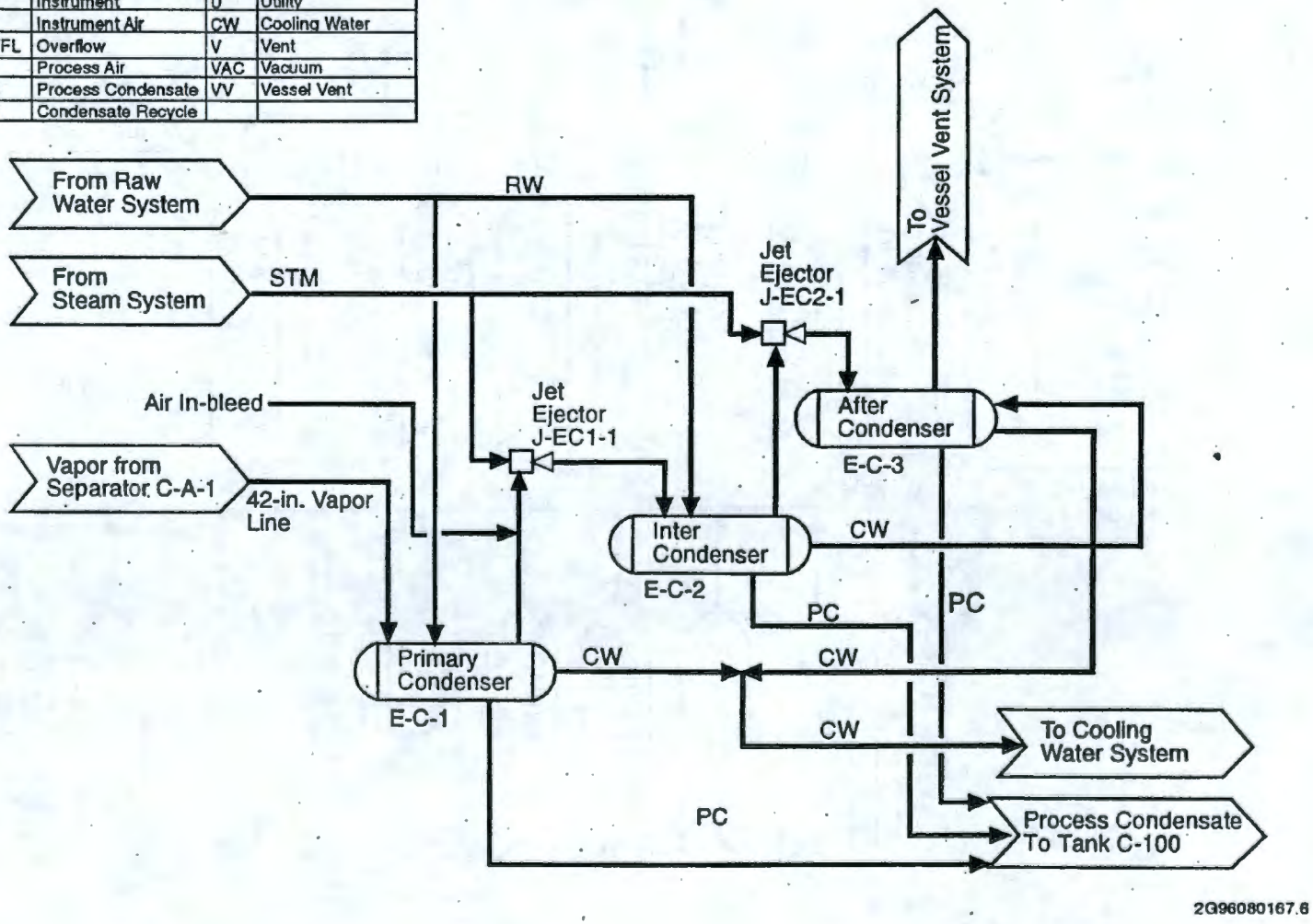

Figure 4.5. 242-A Evaporator Vacuum Condenser System.

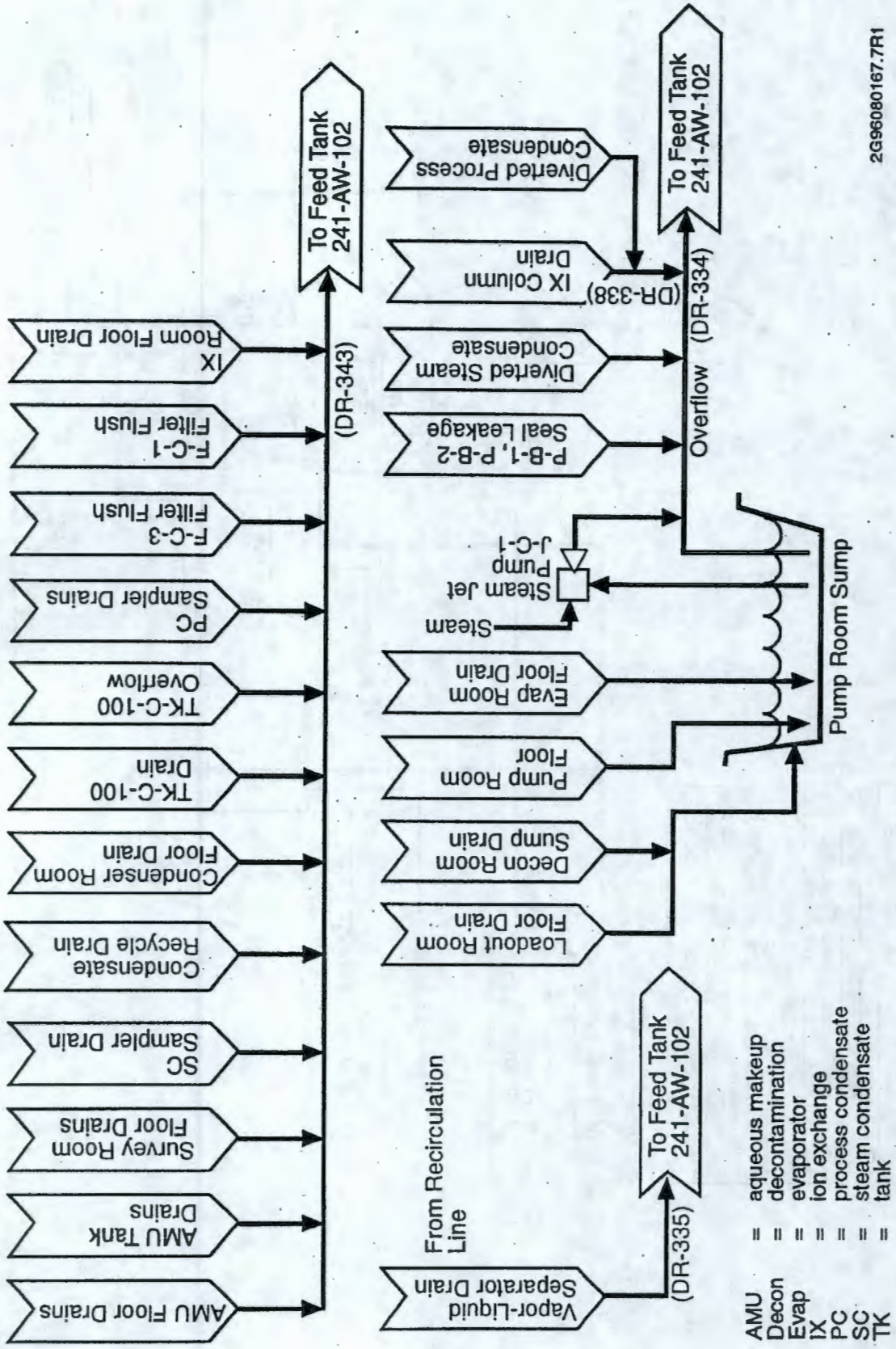

Figure 4.6. 242-A Evaporator Drain System.

CONTENTS

6.0 PROCEDURES TO PREVENT HAZARDS ..... Att 35.6.1

6.1 SECURITY ..... Att 35.6.1
6.1.1 Security Procedures and Equipment ..... Att 35.6.1
6.1.2 Waiver ..... Att 35.6.1

6.2 INSPECTION PLAN ..... Att 35.6.1
6.2.1 General Inspection Requirements ..... Att 35.6.2
6.2.2 Tank System Inspections and Corrective Actions ..... Att 35.6.3
6.2.3 Storage of Reactive and Ignitable Wastes ..... Att 35.6.4
6.2.4 Air Emissions Control and Detection Inspections ..... Att 35.6.4
6.2.5 Inspection Logs ..... Att 35.6.4
6.2.6 Schedule for Remedial Action for Problems Revealed ..... Att 35.6.5

6.3 PREPAREDNESS AND PREVENTION REQUIREMENTS ..... Att 35.6.5
6.3.1 Equipment Requirements ..... Att 35.6.5
6.3.2 Internal Communications ..... Att 35.6.5
6.3.3 Aisle Space Requirement ..... Att 35.6.7

6.4 PREVENTIVE PROCEDURES, STRUCTURES, AND EQUIPMENT ..... Att 35.6.7
6.4.1 Loading and Unloading Operations ..... Att 35.6.7
6.4.2 Run-Off ..... Att 35.6.7
6.4.3 Water Supplies ..... Att 35.6.7
6.4.4 Equipment and Power Failures ..... Att 35.6.8
6.4.5 Personnel Exposure ..... Att 35.6.8

6.5 PREVENTION OF REACTION OF IGNITABLE, REACTIVE, AND INCOMPATIBLE WASTE ..... Att 35.6.9
6.5.1 Precautions to Prevent Ignition or Reaction of Ignitable or Reactive Waste ..... Att 35.6.9
6.5.2 Precautions for Handling Ignitable or Reactive Waste and Mixing of Incompatible Waste ..... Att 35.6.9

TABLES

Table 6-1. Visual Inspection Schedule for Tanks, Piping, and Rooms. ..... Att 35.6.10
Table 6-2. Inspection Schedule of Safety, Security, and Emergency Equipment. ..... Att 35.6.11
Table 6-3. Inspection Schedule for Alarm Monitoring. ..... Att 35.6.12
Table 6-4. Inspection Schedule for Maintenance and Other Inspections. ..... Att 35.6.13

This page intentionally left blank.

6.0 PROCEDURES TO PREVENT HAZARDS

This chapter discusses security, inspection schedules, preparedness and prevention requirements, preventive procedures, structures, and equipment, and prevention of reaction of ignitable, reactive, and incompatible waste for the 242-A Evaporator.

6.1 SECURITY

The following sections describe the security measures, equipment, and warning signs used to control entry to the 242-A Evaporator. Hanford Facility security measures are discussed in the Attachment 33, *General Information Portion* (DOE/RL-91-28).

6.1.1 Security Procedures and Equipment

The following sections describe the 24-hour surveillance system, barriers, and warning signs used to provide security and control access to the 242-A Evaporator.

6.1.1.1 24-hour Surveillance System

The entire Hanford Facility Site is a controlled-access area with around-the-clock access control. For surveillance information refer to the Attachment 33, *General Information Portion* (DOE/RL-91-28).

6.1.1.2 Barrier and Means to Control Entry

All 242-A Evaporator mixed waste tanks and equipment are located within the 242-A Building, which is protected by the building structure and secured entrances. The main entrance, on the east side of the building, and the office entrances, on the south side of the building, are open during normal day shift hours. All other external entrances, including external entrances to areas containing mixed waste, are secured. Visitors are required to check in at the control room and must be escorted when entering areas of the 242-A Evaporator where they might be exposed to mixed waste. All entrances are secured when the building is not staffed. Security lighting is provided around the outside of the building.

6.1.1.3 Warning Signs

Signs bearing the legend "DANGER-- HAZARDOUS MATERIAL - UNAUTHORIZED PERSONNEL KEEP OUT," or equivalent legend, legible from a distance of 7.6 meters, are posted on entrances to rooms at the 242-A Evaporator Building that could contain mixed waste. In addition, there are posted signs at the main entrance and other office entrances instructing visitors to report to the control room for access to the 242-A Evaporator.

6.1.2 Waiver

A waiver of security procedures and equipment requirements is not requested for the 242-A Evaporator. Therefore, the waiver requirements outlined in WAC 173-303-310(1)(a) and (b) are not applicable.

6.2 INSPECTION PLAN

This section describes the method and schedule for inspections of the 242-A Evaporator. The purpose of inspections is to identify situations that might cause or lead to a release of mixed waste that could pose a threat to human health and the environment. Abnormal conditions identified by an inspection must be corrected on a schedule that prevents hazards to the public and environment.

6.2.1 General Inspection Requirements

This section provides an overview of inspections performed at the 242-A Evaporator. A copy of the inspection plan is kept in the 242-A Evaporator control room. There are three general classes of inspections at the 242-A Evaporator:

- Continuous monitoring of remote instrumentations and alarms are performed by operating personnel in the 242-A Evaporator control room using the MCS computer.
- Visual inspections of tanks and equipment are performed by operating personnel. Some inspections of fire protection equipment, such as sprinkler system inspections, are performed by the Hanford Fire Department.
- Preventive maintenance of equipment and calibration of instruments are performed by maintenance personnel. A computerized tracking system is used to identify and schedule preventive maintenance and calibration activities.

Preventive maintenance and instrument calibrations on certain equipment might not be possible when the 242-A Evaporator is operating. Because of the limited duration of 242-A Evaporator campaigns, these activities are scheduled during outages between campaigns to avoid interference with operating activities.

6.2.1.1 Types of Problems

The 242-A Evaporator inspections include, but are not limited to, the following:

- Condition of tanks and ancillary equipment
- Condition of secondary containment
- Evidence of leaks or overflows from tanks, piping, or transfer lines
- Condition of security equipment
- Condition of safety, communications, and emergency equipment.

A schedule of inspections, including items to be inspected, problems to look for, frequency of inspections, and responsible organization are provided in Tables 6.1 through 6.4.

6.2.1.2 Frequency of Inspections

The frequency of inspections is based on the significance of a failure of the equipment and on regulatory requirements, Hanford Site and industry standards, and past experience of the nature and frequency of equipment failures.

The frequency of inspections for the 242-A Evaporator are given in Tables 6.1 through 6.4. Examples of frequencies include:

- Daily (at least every 24 hours) - visual inspections of tanks, piping and secondary containment.
- Weekly (at least every 7 days) - visual inspections of personal protective equipment, exterior lighting, and posted warning signs.
- Monthly (at least every 31 days) - inspections of emergency sirens, fire extinguishers, safety showers, emergency lighting and the spill control kit.
- Bimonthly (at least every 62 days) - inspection of cathodic protection system rectifiers.
- Annually (at least every 365 days) - instrumentation calibrations, cathodic protection system testing, fire inspections.

Leak detectors are functionally checked within 92 days of the start of a campaign and every 92 days thereafter until the campaign is over. The frequency of some alarm monitoring is continuous. This means an operator must be present in the control room to monitor alarm instruments that continuously check for conditions such as leaks and high sump levels. Continuous monitoring is only required when the system is operating.

6.2.2 Tank System Inspections and Corrective Actions

This section discusses the inspections performed on the two tank systems at the 242-A Evaporator: the vapor-liquid separator, C-A-1, and the condensate collection tank, C-100. Inspections include secondary containment and leak and overfill prevention equipment.

6.2.2.1 Overfill Prevention

The vapor-liquid separator, C-A-1, is equipped with instrumentation that alarms before the tank reaches a level where the tank could overflow or entrain liquid waste into the vacuum condenser system. The alarm annunciates in the control room allowing operating personnel to take immediate action to stop the vapor-liquid separator from overfilling.

The condensate tank, C-100, was designed with an overflow line that routes waste to the feed tank, 241-AW-102. This design prevents tank overflow to the condenser room.

6.2.2.2 Visual Inspections

Visual inspections of tanks and secondary containments are performed to check for leaks, signs of corrosion or damage, and malfunctioning equipment. Inspections also include housekeeping checks to ensure aisle space requirements are met. The following rooms containing dangerous waste are inspected:

- Condenser room
- Pump room
- Loadout and hot equipment storage room
- Loading room
- Ion exchange column room.

In addition, the AMU room is inspected when hazardous materials are present in the room. Inspection of the ion exchange column room is required only when mixed waste is present in the ion exchange column or piping.

The vapor-liquid separator is located in the evaporator room, with a portion of the recirculation loop located in the pump room. Because of the high radiation dose in the evaporator room, visual inspections cannot be performed. Leaks in the evaporator room drain to the pump room sump; monitoring of the pump room sump instrumentation is performed to determine if leaks have occurred. Visual inspection of the portion of the recirculation loop located in the pump room is performed through the shielding window on the AMU mezzanine.

6.2.2.3 Leak Detectors

Conductivity probe leak detectors are installed to measure leaks to secondary containment of the feed transfer line, slurry line, and drain lines connecting the 242-A Evaporator to AW Tank Farm. The slurry and drain lines are equipped with cleanout boxes that also have leak detectors. The sample enclosures in the loadout and hot equipment storage room have leak detectors for both the feed and slurry samplers. For information on these systems and their secondary containment, refer to Attachment 35, Chapter 4.0, Section 4.1.4.

Leaks to secondary containment in the evaporator room, pump room, loadout and hot equipment storage room, and loading room drain to the pump room sump. The sump high level alarm serves as a leak detector for these rooms. For information on the rooms and their drain systems, refer to Attachment 35, Chapter 4.0, Section 4.1.4.

6.2.2.4 Cathodic Protection

An active cathodic protection system is installed in the 200 East Area Tank Farms to protect underground piping, including the feed transfer, slurry, and drain lines, from galvanic corrosion. The system consists of rectifiers providing direct current to buried anodes that direct the current to the soil. Test stations are located along the system to determine operability by taking readings on the system. The installation is according to the recommended practices of NACE.

Rectifiers are checked for signs of damage or component degradation at least every 2 months for cathodic protection systems. Operability testing of the cathodic protection system is performed annually.

6.2.2.5 Tank Assessments

The IAR was issued in 1993. The frequency and nature of these assessments are discussed in the IAR.

6.2.3 Storage of Reactive and Ignitable Wastes

The Hanford Fire Department performs annual fire inspections of the 242-A Evaporator using a checklist developed specifically for facilities that handle dangerous and/or mixed waste. The checklist was developed from requirements in the Uniform Fire Code and the National Fire Protection Association code. A copy of the completed checklist is given to operating management to take remedial actions for any problems identified. The completed checklist is included in the operating record and also is available from the Hanford Fire Department.

6.2.4 Air Emissions Control and Detection Inspections

The process vent at the 242-A Evaporator is subject to 40 CFR 264, Subpart AA, which requires organic emissions be limited to 1.4 kilograms per hour, and 2.8 megagrams per year, or controls be installed to reduce organic emissions by 95 percent. Organic concentrations in the waste processed at the 242-A Evaporator are limited to ensure the values of 1.4 kilograms per hour and 2.8 megagrams per year are not exceeded. Therefore, no emission control devices are installed on the 242-A Evaporator vessel ventilation system and no inspections are required (Attachment 35, Chapter 4.0, Section 4.2).

6.2.5 Inspection Logs

Visual inspections are performed using inspection log sheets (also called round sheets) that outline frequency, the components to inspect, and types of problems. Log sheets are kept in the 242-A Evaporator control room. Inspectors record the following information:

- Date and time of the visual inspection
- Printed name and signature of the person performing the inspection
- Notations of the observations made, including space for writing comments.

Completed log sheets are reviewed and approved by the shift supervisor, collected, and stored for at least 5 years.

Maintenance inspections are performed as part of the maintenance job control system. After completion, the maintenance documentation is reviewed and signed.

6.2.6 Schedule for Remedial Action for Problems Revealed

If while performing a visual inspection (Table 6.1), a leak or spill is discovered, facility management responds immediately per Attachment 35, Chapter 7.0, Contingency Plan. Action is taken to stop the leak and determine the cause. The waste is removed from the secondary containment within 24 hours or in a timely manner that prevents harm to human health and the environment. For spills that drain to the pump room sump, the sump must be emptied and rinsed three times (Attachment 35, Chapter 4.0, Section 4.1.5).

If an alarm activates during inspections, an operator responds immediately and implements appropriate actions.

If an inspection identifies equipment that is missing, damaged, or not operating properly, the operator records the problem on a deficiency log in the 242-A Evaporator control room. Repair work is prioritized by facility management to mitigate health risks to workers, maintain integrity of the facility, and prevent hazards to public health and the environment. The Hanford Fire Department repairs fire prevention equipment.

6.3 PREPAREDNESS AND PREVENTION REQUIREMENTS

The following sections document the preparedness and prevention measures taken at the 242-A Evaporator.

6.3.1 Equipment Requirements

The following sections describe the internal and external communications and emergency equipment located at the 242-A Evaporator.

6.3.2 Internal Communications

The 242-A Evaporator is equipped with internal communication systems to provide immediate emergency instruction to facility personnel. The onsite communication systems at the 242-A Evaporator include telephones, hand-held two-way radios, a public address system, and alarm systems. The telephone and radio systems provide for internal and external communication. Alarm systems allow facility personnel to appropriately respond to various emergencies, including building evacuations, take cover events, fires and/or explosions. The locations of telephones, public address systems, and alarms are given in the Attachment 35, Chapter 7.0, Contingency Plan.

Immediate emergency instruction to personnel is provided by a public address system using speaker horns and speakers located throughout the 242-A and 242-AB Buildings and outside.

6.3.2.1 External Communications

The 242-A Evaporator is equipped with devices for summoning emergency assistance from the Hanford Fire Department, the Hazardous Materials Response Team, and/or local emergency response teams, as necessary. External communication is made through the normal telephone system. In addition, the following systems are available for external communication with persons assigned to emergency response organizations:

- A crash alarm telephone is available in the 242-A Evaporator control room. The crash alarm telephone system provides communication of centralized emergency response instructions to 242-A Evaporator personnel

- Fire alarm pull boxes and fire sprinkler flow monitoring devices are connected to a system monitored around the clock by the Hanford Fire Department
- Telephone number 911 (811 if using a cellular phone) is the contact point for the Hanford Site; on notification, the Hanford Patrol Operations Center notifies and/or dispatches required emergency responders
- Telephone number 373-3800 is the single point of contact for the Hanford Site emergency duty officer; this number can be dialed from any Hanford telephone

During certain periods, only one operator may be present at the facility. This operator has access to external communication using telephones located throughout the building.

6.3.2.2 Emergency Equipment

Emergency equipment is available throughout the 242-A Building. The locations of telephones, public address systems, and alarms are given in Attachment 35, Chapter 7.0, Contingency Plan.

Major fire damage is unlikely at the 242-A Evaporator because of the concrete construction and because the amount of combustible material is minimal. A temperature-activated water sprinkler system, emergency lights, fire alarms pull boxes, and fire extinguishers are located throughout the facility. The Hanford Fire Department is capable of providing rapid response to major fires at the 242-A Evaporator and its vicinity, with a fire hydrant located near the east side of the facility.

Safety showers are located in the areas where personnel are most likely to have direct exposure of hazardous materials: in the AMU room and on the first and fourth floors of the condenser room. Water for these devices is supplied from the sanitary water system. Self-contained breathing apparatus units are available in the control room for use throughout the 242-A Building for protection from radiological hazards and are not subject to the HF RCRA Permit provisions. Respirators are located in the PPE storage room near the entryway to the condenser room. Other PPE, such as hazardous material protective gear and special work procedure clothing, are located in cabinets in the survey area. If required, PPE is donned before entry into the rooms containing mixed waste. The level of personal protective equipment required depends on the level of contamination in the area being entered and the activity being performed.

A spill control kit is located in a cabinet near the door to the PPE storage room. An inventory of the equipment in the spill kit is included inside the cabinet. The spill kit cabinet door seal is checked monthly to ensure the kit has not been used. The kit inventory is inspected annually.

The 242-A Evaporator operating personnel are trained in the use of emergency equipment (Attachment 35, Chapter 8.0). Additionally, the Hanford Facility maintains a sufficient inventory of heavy equipment (e.g., bulldozers, cranes, road graders) for emergency response.

6.3.2.3 Water for Fire Control

Water for fire protection is supplied from the 200 East Area raw water system. Columbia River water is supplied to the fire control system from the 282-E Water Supply Reservoir. The water distribution system is sized to provide adequate volume and pressure to supply fire fighting needs under normal and emergency conditions. A fire hydrant is located approximately 10 meters east of the main entrance on the east side of the 242-A Building.

In the event that the sprinkler system at the 242-A Evaporator does not put out a fire, or the sprinkler system is damaged during an accident, each Hanford Fire Department fire station normally has a fire engine, equipped with a hydraulically operated aerial ladder, available to fight the fire. A pumper (fire

engine without a boom) is used if the aerial ladder fire engine is inoperable. Fire engines have a pumping capacity of at least 5,600 liters of water per minute.

6.3.3 Aisle Space Requirement

Sufficient aisle space is maintained on the exterior of the 242-A Evaporator to allow access of personnel and equipment responding to fires, spills, or other emergencies. Unobstructed fire lanes run from Fourth Street and Canton Avenue to the 242-A Building main entrance to allow emergency vehicle access to the main entrance and the nearby fire hydrant.

The 242-A Building interior aisle space is designed to allow access by emergency response personnel while maintaining barriers to contain releases of gaseous or liquid waste and hazardous material. Walkways in the rooms containing mixed waste are checked daily to ensure the walkways have not been obstructed by portable equipment, trash, etc.

6.4 PREVENTIVE PROCEDURES, STRUCTURES, AND EQUIPMENT

The following sections describe preventive procedures, structures, and equipment.

6.4.1 Loading and Unloading Operations

The feed transfer and slurry lines between the 242-A Evaporator and AW Tank Farm are constructed of carbon steel piping with secondary containment and leak detection in a pipe-within-a-pipe arrangement. Although the regulations exempt systems that serve as secondary containment from requiring secondary containment, two of the drain lines from the 242-A Evaporator to AW Tank Farm also have outer encasement piping and leak detection (refer to Attachment 35, Chapter 4.0, Section 4.1.4, for information on these lines).

Waste transfers within the 242-A Building are contained by the secondary containment walls, floors and drains (refer to Attachment 35, Chapter 4.0, Section 4.1.4, for information on secondary containment at the 242-A Evaporator).

There are no mixed waste storage containers loaded or unloaded at the 242-A Evaporator. Unloading operations occur when equipment contaminated with mixed waste exits the facility. Such materials are fully sealed in plastic with absorbent material to absorb any free liquid present. Because of these requirements, the likelihood of a spill outside the 242-A Building during this operation is extremely low.

6.4.2 Run-Off

All liquid waste handling at the 242-A Evaporator occurs within tank systems with secondary containment. All rooms containing mixed waste have drains that route to either the pump room sump or the feed tank, 241-AW-102. The pump room sump overflows to the feed tank as well. Therefore, run-off from a major leak, such as a break in a large water line within the 242-A Building, would be contained within the facility or drained to the feed tank (refer to Attachment 35, Chapter 4.0, Section 4.1.4 for information on secondary containment and drain systems).

6.4.3 Water Supplies

Raw and sanitary Columbia River water are supplied to the 242-A Evaporator via separate underground lines from the 282-E Water Supply Reservoir. Raw water is filtered to prevent organisms and other

debris from clogging valves, fire hydrants, and other equipment. Sanitary water is filtered and treated before distribution through a piping system separate from the raw water system.

The raw water supply to the 242-A Evaporator enters the 242-A-81 Water Service Building, passing through a strainer and backflow preventer before entering the facility. The backflow preventer ensures contaminated water cannot flow back into the raw water system. A second backflow preventer is installed in the 242-A Building on the raw water supply line connecting with the condensate recycle line. This system allows either raw water or process condensate to be used for the pump seal water and deentrainment pad spray water without risk of contamination of the raw water system.

The sanitary water system provides water to the lunchroom, drinking fountains, men's and women's changerooms, safety showers, and supply ventilation system air washers. There are no connections between sanitary water and any system or piping containing mixed waste.

6.4.4 Equipment and Power Failures

Standby power is provided by a diesel generator located southeast of the 242-A Building. The diesel motor starts automatically on loss of electrical power and has sufficient fuel to operate the generator to safely shut down the evaporator process. An uninterruptible power supply system also is provided to allow continued operation of the MCS computer to ensure uninterrupted monitoring until the emergency generator is fully on line.

The 242-A Evaporator is designed to mitigate the effects of failure of a major piece of equipment. In general, the evaporator process can be shut down and the vapor-liquid separator gravity-drained to the feed tank, 241-AW-102, in the event of equipment failure. The process condensate tank, TK-C-100, is designed to overflow to feed tank 241-AW-102. This mitigates failure of the process condensate pump used to transfer the process condensate to LERF.

Response to equipment and power failures are discussed in more detail in Attachment 35, Chapter 7.0, Contingency Plan.

6.4.5 Personnel Exposure

Facility design, administrative controls, and personal protective equipment are used at the 242-A Evaporator to prevent undue exposure of personnel to mixed waste and other hazardous materials. The following features were incorporated into the 242-A Evaporator design to minimize personnel exposure.

- The facility is designed for remote operation of equipment containing highly radioactive solutions such as waste feed and slurry. These solutions usually are present only in the pump room and evaporator room, which are heavily shielded and routinely are not entered by operating personnel.
- The 242-A Building ventilation system is designed to provide air flow from uncontaminated zones to progressively more contaminated zones.
- Emergency lighting devices are located strategically throughout the 242-A Building.
- Eyewash stations and safety showers are located in rooms containing mixed waste or other hazardous materials that personnel routinely enter. For location of these, refer to Attachment 35, Chapter 7.0, Contingency Plan.
- Continuous air monitors with audio and/or visual alarms to notify personnel of airborne radioactive contamination are provided in rooms that contain mixed waste and that routinely are entered.

- Methods for decontaminating vessels and equipment are available to reduce personnel exposure if entry for maintenance activity is required.
- Offices, control room, change rooms, and lunchroom are situated to minimize casual exposure of personnel.

All operations are conducted so employee exposure to mixed waste and other hazardous materials are maintained ALARA. Exposures are minimized by engineering or administrative controls with protective gear used where such controls are not practical. Before the start of any operation that might expose personnel to the risk of injury or contamination, a review of the operation is performed to ensure the nature of hazards that might be encountered are considered and that appropriate protective gear is selected. Administrative procedures dictate the level of protective clothing worn and depend on the location within the 242-A Building and the nature of the activity being performed. Personnel are trained to wear personal protective equipment in accordance with approved work procedures.

6.5 PREVENTION OF REACTION OF IGNITABLE, REACTIVE, AND INCOMPATIBLE WASTE

The following sections describe prevention of reaction of ignitable, reactive, and incompatible waste.

6.5.1 Precautions to Prevent Ignition or Reaction of Ignitable or Reactive Waste

Administrative procedures are designed to prevent the ignition or reaction of waste at the 242-A Evaporator. The precautions include the following.

- Analysis is performed on candidate waste in the DST System to check that there are no exothermic reactions when the waste is heated and that there will be no adverse affects due to mixing the contents of different waste tanks in the feed tank and evaporator vessel (refer to Attachment 35, Chapter 3.0, for details on waste analysis).
- Sample analysis of the candidate waste in the DST System includes a surface sample to identify the presence of a separable organic phase that might be ignitable. If a separate organic phase is detected, the waste solution level in the feed tank is maintained above 2.54 meters to prevent transfer of the organic phase to the 242-A Evaporator.
- The condensate tank, C-100, is equipped with instrumentation to detect the presence of a separable organic phase. If a separate organic phase is detected, the tank is allowed to overflow, transferring the organic phase to the feed tank, 241-AW-102.
- No smoking is allowed anywhere in the 242-A Building.
- The vapor-liquid separator and the condensate tank are drained before any welding is performed.

6.5.2 Precautions for Handling Ignitable or Reactive Waste and Mixing of Incompatible Waste

Waste received at the 242-A Evaporator is protected from materials or conditions that might cause the waste to ignite or react. Much of the waste handling is done remotely to reduce the risk to operating personnel. For precautions taken to prevent the ignition or reaction of waste, refer to Section 6.5.1.

The constituents in the waste received at the 242-A Evaporator that are ignitable or reactive are not very volatile. Therefore, the evaporation process renders the waste that is evaporated (i.e., the process condensate) neither ignitable nor reactive.

1 **Table 6.1. Visual Inspection Schedule for Tanks, Piping, and Rooms.**

Item	Inspection	Frequency[1]	Responsible organization	Comments
Tank and Piping Inspection				
Condensate tank and piping	Inspect tank and piping for leaks, corrosion, or wear.	Daily	Operations	
Room Inspections				
AMU room	• Inspect tanks and piping for leaks, corrosion, or wear. • Inspect floor for spills or damage. • Inspect for equipment malfunctions. • Inspect for housekeeping/aisle space.	Daily	Operations	
Pump room	• Inspect piping for leaks, corrosion or wear. • Inspect floor for spills or damage. • Inspect for equipment malfunctions. • Inspect for housekeeping. • Inspect pump room sump for overflow.	Daily	Operations	Use viewing window in AMU room to perform inspection.
Loadout and hot equipment storage room	• Inspect piping for leaks, corrosion, or wear. • Inspect sumps and floor for spills or damage. • Inspect for housekeeping/ aisle space.	Daily	Operations	Use viewing window in AMU room to perform inspection.
Loading room	• Inspect for housekeeping/ aisle space.	Daily	Operations	Use viewing window in AMU room to perform inspection.
Condenser room	• Inspect tanks and piping for leaks, corrosion, or wear. • Inspect floors for spills or damage. • Inspect for equipment malfunctions. • Inspect for housekeeping/ aisle space.	Daily	Operations	
IX column room	• Inspect piping for leaks, corrosion, or wear. • Inspect floor for spills or damage.	Daily	Operations	Surveillance is required only when mixed waste is present in the column or piping.

2

[1] Continuously: an operator must be present in the control room to respond to alarms
Monthly: at least every 31 days
Bimonthly: at least every 62 days
Daily: at least every 24 hours
Biannually: at least every 184 days
Weekly: at least every 7 days
Annually: at least every 365 days

1 **Table 6.2. Inspection Schedule of Safety, Security, and Emergency Equipment.**

Item	Inspection	Frequency[1]	Responsible organization	Comments
Security				
Building external doors	Verify external doors are closed and locked.	Daily	Operations	Entrances to office areas are allowed to be unlocked.
Posted warning signs	Verify signs are present, legible, and visible at 7.6 meters.	Weekly	Operations	
Outdoor lighting	Verify outdoor lighting is sufficient.	Weekly	Operations	
Communications				
Crash alarm telephone	Verify crash alarm telephone is operable.	Monthly	Operations	
Emergency sirens	Perform functional check to verify operability.	Monthly	Operations	
Radios	Verify radios are operable and batteries are charged.	Monthly	Operations	
Telephones	Verify telephones are operable.	Quarterly	Operations	
Intercom/public address system	Verify systems are working properly.	Quarterly	Operations	
Emergency Equipment				
Safety showers/ eyewash station	Verify safety showers and eyewash station are operable.	Monthly	Operations	
Emergency lanterns	Verify emergency lanterns are operable.	Monthly	Maintenance	
Fire extinguishers	Verify fire extinguishers are in their proper location with no signs of tampering.	Monthly	Operations	
Spill response kit	Verify all equipment is present (from checklist in kit) with no signs of tampering.	Monthly	Operations	
Self-contained breathing apparatus (SCBA)	Verify shelf life of SCBA is current, no signs of tampering.	Monthly	Operations	
Personal protective clothing	Verify sufficient stock of clothing is available.	Weekly	Operations	
Full-face respirators	Verify resporator shelf life are current and sufficient stock is available.	Monthly	Operations	

[1] Continuously: an operator must be present in the control room to respond to alarms
Monthly: at least every 31 days.
Bimonthly: at least every 62 days
Daily: at least every 24 hours
Biannually: at least every 184 days
Weekly: at least every 7 days
Annually: at least every 365 days

1 **Table 6.3. Inspection Schedule for Alarm Monitoring.**

Item	Inspection	Frequency[1]	Responsible organization	Comments
Overfill Protection				
Vapor-liquid separator: WFSH-CA11 WFSH-CA12	Monitor for vapor-liquid separator high level.	Continuously	Operations	Surveillance required only when solution is in the vapor-liquid separator.
Leak Detection				
Feed transfer line: LDS-SN269 LDS-SN270	Monitor feed transfer line for leaks.	Continuously	Operations	Surveillance required only during feed line transfers.
Slurry transfer line: LDS-AW-SL	Monitor slurry transfer line for leaks.	Continuously	Operations	Surveillance required only during slurry line transfers.
Cleanout boxes: LDS-COBAW	Monitor cleanout boxes for leaks.	Continuously	Operations	Surveillance required only during slurry or drain line transfers.
Drain lines: LDS-AW-DR	Monitor drain lines for leaks.	Continuously	Operations	Surveillance required only during drain line transfers.
Sampler lines: LDS-SMPL1 LDS-SMPL2	Monitor feed and slurry sampler lines for leaks.	Continuously	Operations	Surveillance required only during feed or slurry sampling.
Pump room sump: WFI-SUMP1	Monitor for leaks in the evaporator room, pump room, load out and hot equipment storage room and loading room. These rooms drain to the pump room sump.	Continuously	Operations	Surveillance required only when waste solution is present in the rooms listed.

2

[1] Continuously: an operator must be present in the control room to respond to alarms.
Monthly: at least every 31 days.
Bimonthly: at least every 62 days.
Daily: at least every 24 hours.
Biannually: at least every 184 days.
Weekly: at least every 7 days.
Annually: at least every 365 days.

1 **Table 6.4. Inspection Schedule for Maintenance and Other Inspections.**

Item	Inspection	Frequency[1]	Responsible organization	Comments
Instrumentation Functional Checks and Calibrations				
Leak detectors	Perform leak detector functional checks.	Refer to comment	Maintenance/ Operations	Perform functional checks within 92 days of campaign startup and every 92 days thereafter until the campaign is over.
Vapor-liquid separator high level alarms: WFSH-CA11 WFSH-CA12	Perform calibrations of loop instruments.	Annually	Maintenance	
Pump room sump level: WFI-SUMP1	Perform calibrations of loop instruments.	Annually	Maintenance	
Emergency Electrical Equipment				
Diesel generator	Verify operability.	Monthly	Maintenance	
Uninterruptible power supply	Verify output voltage and inspect battery for signs of damage or tampering.	Annually	Maintenance	
Cathodic Protection				
Rectifiers	Check rectifiers for leaks, murky oil, signs of damage, or component degradation.	Bimonthly (62 days)	Maintenance	
System operation	Verify operation meets NACE requirements.	Annually	Maintenance	
Fire Systems				
Smoke detectors	Verify operability	Annually	Hanford Fire Department	
Pull stations	Verify operability	Annually	Hanford Fire Department	
Fire extinguishers	Verify that pressure is within proper range and verify unimpaired physical condition.	Annually	Hanford Fire Department	Refer to Table 6.2 for monthly inspection.
Fire hydrant	Check that hydrant is operational.	Biannually (182 days)	Hanford Fire Department	
Fire inspection	Walk down to check for fire extinguishers, access control, labeling, fire lanes, fire hydrants, etc.	Annually	Hanford Fire Department	Hanford Fire Department Checklist is used for the inspection.
Other Inspections				
Integrity assessment	Check integrity of vapor-liquid separator and condensate tank per IAR.	Refer to comment	Operations	The requirements and frequencies for integrity testing are given in the IAR.

2

[1] Continuously: an operator must be present in the control room to respond to alarms.
Monthly: at least every 31 days.
Bimonthly: at least every 62 days.
Daily: at least every 24 hours.
Biannually: at least every 184 days.
Weekly: at least every 7 days.
Annually: at least every 365 days.

IAR = initial integrity assessment.
NACE = National Association of Corrosion Engineers.

1
2
3
4

This page intentionally left blank.

CONTENTS

7.0 CONTINGENCY PLAN ..... Att 35.7.1

7.1 BUILDING EVACUATION ROUTING (BUILDING LAYOUT) ..... Att 35.7.4

7.2 BUILDING EMERGENCY DIRECTOR ..... Att 35.7.4

7.3 IMPLEMENTATION OF THE PLAN ..... Att 35.7.4
7.3.1 Protective Actions Responses ..... Att 35.7.5
7.3.2 Response to Facility Operations Emergencies ..... Att 35.7.6
7.3.3 Prevention of Recurrence or Spread of Fires, Explosions, or Releases ..... Att 35.7.8
7.3.4 Incident Recovery and Restart of Operations ..... Att 35.7.8
7.3.5 Incompatible Waste ..... Att 35.7.9
7.3.6 Post-Emergency Equipment Maintenance and Decontamination ..... Att 35.7.9

7.4 EMERGENCY EQUIPMENT ..... Att 35.7.9
7.4.1 Fixed Emergency Equipment ..... Att 35.7.9
7.4.2 Portable Emergency Equipment ..... Att 35.7.10
7.4.3 Communications Equipment/Warning Systems ..... Att 35.7.10
7.4.4 Personal Protective Equipment ..... Att 35.7.10
7.4.5 Spill Control and Containment Supplies ..... Att 35.7.10
7.4.6 Incident Command Post ..... Att 35.7.10

7.5 REQUIRED REPORTS ..... Att 35.7.11

7.6 PLAN LOCATION AND AMENDMENTS ..... Att 35.7.11

7.7 FACILITY/BUILDING EMERGENCY RESPONSE ORGANIZATION ..... Att 35.7.11

FIGURE

Figure 7.1. 242 A Evaporator Evacuation Routes ..... Att 35.7.12
Figure 7.2. 242-A Evaporator Staging Areas ..... Att 35.7.13

TABLE

Table 7.1. Hanford Facility Documents Containing Contingency Plan Requirements of WAC 173-303-350(3) ..... Att 35.7.2

This page intentionally left blank.

7.0 CONTINGENCY PLAN

The WAC 173-303 requirements for a contingency plan are satisfied in the following documents: Portions of Hanford Facility RCRA Permit, Attachment 4, *Hanford Emergency Management Plan* (DW Portion)] and this Chapter.

The unit-specific building emergency plan also serves to satisfy a broad range of other requirements [e.g., Occupational Safety and Health Administration standards (29 CFR 1910), *Toxic Substance Control Act of 1976* (40 CFR 761) and U.S. Department of Energy Orders]. Therefore, revisions made to portions of this contingency plan document that are not governed by the requirements of WAC 173-303 will not be considered as a modification subject to WAC 173-303-830 or Hanford Facility RCRA Permit (DW Portion) Condition I.C.3.

Table 7.1 identifies which portions of the building emergency plan are written to meet WAC 173-303 contingency plan requirements. In addition to the building emergency plan portions identified in Table 7.1, Section 12.0 of the building emergency plan is written to meet WAC 173-303 requirements identifying where copies of the *Hanford Emergency Management Plan* and the building emergency plan are maintained on the Hanford Facility. Therefore, revisions to Section 12.0 of the building emergency plan and the portions identified in Table 7.1 are considered a modification subject to WAC 173-303-830 or Hanford Facility RCRA Permit (DW Portion) Condition I.C.3.

Table 7.1.Hanford Facility Documents Containing Contingency Plan Requirements of WAC 173-303-350(3)

Requirement	HF RCRA Permit *Attachment 4 Hanford Emergency Management Plan* (DOE/RL-94-02)	Building Emergency Plan[1] (HNF-IP-0263-242)	Attachment 35, 242-A Evaporator, Chapter 7.0
-350(3)(a) - A description of the actions which facility personnel must take to comply with this section and WAC 173-303-360.	X[2] Section 1.3.4	X[2] Sections 7.1, 7.2 through 7.2.5, and 7.3[3] Sections 4.0, 8.2, 8.3, 8.4, and 11.0	X[2] Sections 7.3.1, 7.3.2, through 7.3.2.5, and 7.3.3[3] Sections 7.3, 7.3.4, 7.3.5, 7.3.6, and 7.5
-350(3)(b) - A description of the actions which shall be taken in the event that a dangerous waste shipment, which is damaged or otherwise presents a hazard to the public health and the environment, arrives at the facility, and is not acceptable to the owner or operator, but cannot be transported pursuant to the requirements of WAC 173-303-370(5), Manifest system, reasons for not accepting dangerous waste shipments.	X[2] Section 1.3.4	X[2,4] Section 7.2.5.1	X[2,4] Section 7.3.2.5.1
-350(3)(c) - A description of the arrangements agreed to by local police departments, fire departments, hospitals, contractors, and state and local emergency response teams to coordinate emergency services as required in WAC 173-303-340(4).	X Sections 3.2.3, 3.3.1, 3.3.2, 3.4, 3.4.1.1, 3.4.1.2, 3.4.1.3, 3.7, and Table 3.1		

[1]An 'X' indicates requirement applies.

[1] Portions of the *Hanford Emergency Management Plan* not enforceable through Appendix A of that document are not made enforceable by reference in the building emergency plan.

[2] The *Hanford Emergency Management Plan* contains descriptions of actions relating to the Hanford Site Emergency Preparedness System. No additional descriptions of actions are required at the site level. If other credible scenarios exist or if emergency procedures at the unit are different, the description of actions contained in the building emergency plan will be used during an event by a building emergency director.

[3] Sections 7.1, 7.2 through 7.2.5, and 7.3 of the building emergency plan are those sections subject to the Class 2 "Changes in emergency procedures (i.e., spill or release response procedures)" described in WAC 173-303-830, Appendix I Section B.6.a.

[4] This requirement only applies to TSD units that receive shipment of dangerous or mixed waste defined as offsite shipments in accordance with WAC 173-303.

Requirement	HF RCRA Permit *Attachment 4 Hanford Emergency Management Plan* (DOE/RL-94-02)	Building Emergency Plan[1] (HNF-IP-0263-242)	Attachment 35, 242-A Evaporator, Chapter 7.0
-350(3)(d) - A current list of names, addresses, and phone numbers (office and home) of all persons qualified to act as the emergency coordinator required under WAC 173-303-360(1). Where more than one person is listed, one must be named as primary emergency coordinator, and others must be listed in the order in which they will assume responsibility as alternates. For new facilities only, this list may be provided to the department at the time of facility certification (as required by WAC 173-303-810 (14)(a)(I)), rather than as part of the permit application.		X[5] Sections 3.1 and 13.0	X[5] Sections 7.2 and 7.7
-350(3)(e) - A list of all emergency equipment at the facility (such as fire extinguishing systems, spill control equipment, communications and alarm systems, and decontamination equipment), where this equipment is required. This list must be kept up to date. In addition, the plan must include the location and a physical description of each item on the list, and a brief outline of its capabilities.	X Hanford Fire Department: Appendix C	X Section 9.0	X Section 7.4
-350(3)(f) - An evacuation plan for facility personnel where there is a possibility that evacuation could be necessary. This plan must describe the signal(s) to be used to begin evacuation, evacuation routes, and alternate evacuation routes.	X[6] Figure 7.3 and Table 5.1	X[7] Section 1.5	X[7] Section 7.1

1

[5] Emergency Coordinator names and home telephone numbers are maintained separate from any contingency plan document, on file in accordance with Hanford Facility RCRA Permit (DW Portion) General Condition II.A.4. and is updated, at a minimum, monthly.

[6] The Hanford Facility (sitewide) signals are provided in this document. No unit/building signal information is required unless unique devices are used at the unit/building.

[7] An evacuation route for the TSD unit must be provided. Evacuation routes for occupied buildings surrounding the TSD unit are provided through information boards posted within buildings.

7.1 BUILDING EVACUATION ROUTING (BUILDING LAYOUT)

Figures 7.1 and 7.2 provide identification of the primary and secondary staging areas and a general layout of the 242-A Evaporator. Alternate evacuation routes will be used on a case-by-case basis, based on meteorological conditions at the time of the event.

7.2 BUILDING EMERGENCY DIRECTOR

Emergency response will be directed by the BED until the Incident Commander (IC) arrives. The incident command system and staff with supporting on-call personnel fulfill the responsibilities of the Emergency Coordinator as discussed in WAC 173-303-360.

During events, 242-A Evaporator personnel perform response duties under the direction of the BED. The Incident Command Post (ICP) is managed by either the senior Hanford Fire Department member present on the scene or senior Hanford Patrol member present on the scene (security events only). These individuals are designated as the IC and as such, have the authority to request and obtain any resources necessary for protecting people and the environment. The BED becomes a member of the ICP and functions under the direction of the IC. In this role, the BED continues to manage and direct 242-a Evaporator operations.

A listing of BEDs by title, work location, and work telephone numbers is contained in Section 13.0 of this plan. The BED is on the premises or is available through an "on-call" list 24 hours a day. Names and home telephone numbers of the BEDs are available from the Patrol Operations Center (POC) in accordance with *Hanford Facility RCRA Permit*, Dangerous Waste Portion, General Condition II.A.4.

7.3 IMPLEMENTATION OF THE PLAN

The BED ensures that trained personnel identify the character, source, amount, and areal extent of the release, fire, or explosion to the extent possible. Identification of waste can be made by activities that can include, but are not limited to, visual inspection of involved containers, sampling activities in the field, reference to inventory records, or by consulting with facility personnel. Samples of materials involved in an emergency might be taken by qualified personnel and analyzed as appropriate. These activities must be performed with a sense of immediacy and shall include available information.

The BED shall use the following guidelines to determine if an event has met the requirements of WAC 173-303-360(2)(d):

1. The event involved an unplanned spill, release, fire, or explosion,

AND

2.a The unplanned spill or release involved a dangerous waste, or the material involved became a dangerous waste as a result of the event (e.g., product that is not recoverable.), or

2.b The unplanned fire or explosion occurred at the 242-A Evaporator or transportation activity subject to RCRA contingency planning requirements,

AND

3. Time-urgent response from an emergency services organization was required to mitigate the event or a threat to human health or the environment exists.

As soon as possible, after stabilizing event conditions, the BED shall determine, in consultation with the FH site contractor environmental single point-of-contact, if notification to Ecology is needed to meet

WAC 173 303-360 (2)(d) reporting requirements. If all of the conditions under 1, 2, and 3 are met, notifications are to be made to Ecology. Additional information is found in DOE/RL-94-02, *Hanford Emergency Management Plan*, Section 4.2.

If review of all available information does not yield a definitive assessment of the danger posed by the incident, a worst-case condition will be presumed and appropriate protective actions and notifications will be initiated. The BED is responsible for initiating any protective actions based on their best judgment of the incident.

The BED must assess each incident to determine the response necessary to protect the personnel, facility, and the environment. If assistance from Hanford Patrol, Hanford Fire Department, or ambulance units is required, the Hanford Emergency Response Number (911) must be used to contact the POC and request the desired assistance. To request other resources or assistance from outside the 242-A Evaporator, the POC business number is used (373-3800).

7.3.1 Protective Actions Responses

Protective action responses are discussed in the following sections. The steps identified in the following description of actions do not have to be performed in sequence because of the unanticipated sequence of incident events.

7.3.1.1 Evacuation

The objective of a facility evacuation order is to limit personnel exposure to hazardous materials or dangerous/mixed waste by increasing the distance between personnel and the hazard. The scope of the evacuation includes evacuation of the facility due to an event at the facility as well as evacuation of the facility in response to a site evacuation order. Evacuation is directed by the BED when conditions warrant and applies to all personnel not actively involved in the event response or in emergency plan-related activities.

The BED initiates the evacuation by directing an announcement be made to evacuate along with the evacuation location over the public address system and facility radios, activate the evacuation siren (steady siren) for three minutes, and, as conditions warrant, by activating the 200 Area evacuation alarms by calling the POC using 911 or 373-3800 (if using a cellular phone). Personnel proceed to a predetermined staging area (shown in Figure 7.2), or other safe upwind location, as determined by the BED. The BED determines the operating configuration of the facility and identifies any additional protective actions to limit personnel exposure to the hazard.

Emergency organization personnel or assigned operations personnel conduct a sweep of occupied buildings to ensure that all non-essential personnel and visitors have evacuated. For an immediate evacuation, accountability is performed at the staging area. The BED assigns personnel as accountability aides and staging area managers with the responsibility to ensure that evacuation actions are taken at the 242-A Evaporator. All implementing actions executed by the aides/managers are directed by the emergency response procedures identified in Attachment A. When evacuation actions are complete, the aides/managers provide a status report to the BED. The BED provides status to the Incident Commander.

7.3.1.2 Take Cover

The objective of the take cover order is to limit personnel exposure to hazardous or dangerous/mixed waste when evacuation is inappropriate or not practical. Evacuation might not be practical or appropriate because of extreme weather conditions or the material release might limit the ability to safely evacuate personnel.

The BED initiates the take cover by directing an announcement be made over the public address system and facility radios, by activating the take cover siren (wavering siren) for three minutes, and, as conditions warrant, by activating the 200 Area take cover alarms by calling the POC using 911 or 373-3800 (if using a cellular phone). Actions to complete a facility take cover order are directed by the emergency response procedure in Attachment A. Protective actions associated with operations include configuring, or shutting down, the ventilation systems. Determination of additional take cover actions is based on operating configuration, weather conditions, amount and duration of release, and other conditions, as applicable to the event and associated hazard. As a minimum, personnel exposure to the hazard is minimized. The BED assigns personnel as accountability aides with responsibility to ensure that take cover actions are taken at all occupied buildings at the 242-A Evaporator. When take cover actions are complete the aides/managers provide the BED with a status report.

7.3.2 Response to Facility Operations Emergencies

Depending on the severity of the event, the BED reviews the site-wide procedures and 242-A Evaporator emergency response procedure(s) and, as required, categorizes and/or classifies the event. If necessary, the BED initiates area protective actions and Hanford Site Emergency Response Organization activation. The steps identified in the following description of actions do not have to be performed in sequence because of the unanticipated sequence of incident events.

7.3.2.1 Loss of Utilities

A case-by-case evaluation is required for each event to determine loss of utility impacts. When a BED determines a loss of utility impact, actions are taken to ensure dangerous and/or mixed waste is being properly managed, to the extent possible given event circumstances. As necessary, the BED will stop operations and take appropriate actions until the utility is restored. If loss of utilities at the 242-A Evaporator results in a major process disruption/loss of plant control, notifications in Section 7.2.2 are performed.

7.3.2.2 Major Process Disruption/Loss of Plant Control

Upon loss of the MCS, the 242-A Evaporator Shift Operations Manager is notified while an attempt is made to return the MCS to service. If a dump of C-A-1 vessel does occur, AW Tank Farm personnel are notified of impending over-pressurization of DST system tank 241-AW-102, and all personnel in the AW Tank Farm evacuate to the change trailer. Non-essential personnel exit the 242-A Evaporator facility.

The system condition is assessed, and corrective actions are implemented. Operations are placed on recirculation by securing the slurry pump and waste feed to the plant. Facility shutdown is accomplished by performing manual, localized actions such as system isolation, equipment shutdown, etc.

7.3.2.3 Pressure Release

If mixed waste release occurs, perform actions identified in Section 7.2.5.

7.3.2.4 Fire and/or Explosion

In the event of a fire, the discoverer activates a fire alarm; calls 911 (373-3800 if using a cellular phone) or verifies that 911 has been called. Automatic initiation of a fire alarm (through the smoke detectors, sprinkler systems, and pull boxes) is also possible.

- Unless otherwise instructed, personnel shall evacuate the area/building by the nearest safe exit and

proceed to the designated staging area for accountability.

- On actuation of the fire alarm, ONLY if time permits, personnel should shut down equipment, secure waste, and lock up classified materials (or hand carry them out). The alarm automatically signals the Hanford Fire Department.
- The BED proceeds directly to the ICP, obtains all necessary information pertaining to the incident and sends a representative to meet Hanford Fire Department.
- The BED provides a formal turnover to the IC when the IC arrives at the ICP.
- The BED informs the Hanford Site Emergency Response Organization as to the extent of the emergency (including estimates of dangerous waste, mixed waste, or radioactive material quantities released to the environment).
- If operations are stopped in response to the fire, the BED ensures that systems are monitored for leaks, pressure buildup, gas generation and ruptures.
- Hanford Fire Department firefighters extinguish the fire as necessary.

NOTE: Following a fire and/or explosion, WAC 173-303-640(7) will be addressed for the 242-A Evaporator regarding fitness for use.

7.3.2.5 Hazardous Material, Dangerous and/or Mixed Waste Spill

Spills can result from many sources including process leaks, container spills or leaks, damaged packages or shipments, or personnel error. Spills of mixed waste are complicated by the need to deal with the extra hazards posed by the presence of radioactive materials.

- The discoverer notifies BED and initiates SWIMS response:
  - Stops work
  - Warns others in the vicinity
  - Isolates the area
  - Minimizes the spill if possible
  - Requests the BED Secure ventilation.
- The BED determines if emergency conditions exist requiring response from the Hanford Fire Department based on classification of the spill and injured personnel, and evaluates need to perform additional protective actions.
- If the Hanford Fire Department resources are not needed, the spill is mitigated with resources identified in Section 9.0 of this plan and proper notifications are made.
- If the Hanford Fire Department resources are needed, the BED calls 911 (373-3800 if using a cellular phone).
- The BED sends a representative to meet the Hanford Fire Department.
- The BED provides a formal turnover to the IC when the IC arrives at the ICP.
- The BED informs the Hanford Site Emergency Response Organization as to the extent of the emergency (including estimates of dangerous waste, mixed waste, or radioactive material quantities released to the environment).
- If operations are stopped in response to the spill, the BED ensures that systems are monitored for leaks, pressure buildup, gas generation, and ruptures.
- Hanford Fire Department stabilizes the spill.

NOTE: For response to leaks or spills and disposition of leaking or unfit-for-use tank systems, refer to WAC 173-303-640(7).

7.3.2.5.1 Damaged or Unacceptable Shipments

The 242-A Evaporator does not receive dangerous or mixed waste shipments.

7.3.2.6 Radiological Material Release

At a minimum, actions described in Section 7.2.5 are taken. Abnormal radiation actions also may be implemented if conditions are warranted.

7.3.2.7 Criticality

A criticality is not a credible accident at the 242-A Evaporator.

7.3.3 Prevention of Recurrence or Spread of Fires, Explosions, or Releases

The BED, as part of the incident command system, takes the steps necessary to ensure that a secondary release, fire, or explosion does not occur. The BED will take measures, where applicable, to stop processes and operations, collect and contain released wastes and remove or isolate containers. The BED shall also monitor for leaks, pressure buildups, gas generation, or ruptures in valves, pipes or other equipment, whenever this is appropriate.

7.3.4 Incident Recovery and Restart of Operations

A recovery plan is developed when necessary in accordance with DOE/RL-94-02, *Hanford Emergency Management Plan*, Section 9.2. A recovery plan is needed following an event where further risk could be introduced to personnel, the 242-A Evaporator, or the environment through recovery action and/or to maximize the preservation of evidence.

If this plan was implemented according to Section 4.0 of this plan, the Washington State Department of Ecology is notified before operations can resume. The DOE/RL-94-02, *Hanford Emergency Management Plan*, Section 5.1 discusses different reports to outside agencies. This notification is in addition to those required reports and includes the following statements:

- There are no incompatibility issues with the waste and released materials from the incident.
- All the equipment has been cleaned, fit for its intended use, and placed back into service.

The notification required by WAC 173-303-360(2)(j) may be made via telephone conference. Additional information that Ecology requests regarding these restart conditions will be included in the required 15-day report identified in Section 11.0 of this plan.

For emergencies not involving activation of the Hanford EOC, the BED ensures that conditions are restored to normal before operations are resumed. If the Hanford Site Emergency Response Organization was activated and the emergency phase is complete, a special recovery organization could be appointed at the discretion of RL to restore conditions to normal. This process is detailed in RL and contractor emergency procedures. The makeup of this organization depends on the extent of the damage and the effects. The onsite recovery organization will be appointed by the appropriate contractor's management.

7.3.5 Incompatible Waste

After an event, the BED or the onsite recovery organization ensures that no waste that might be incompatible with the released material is treated, stored, and/or disposed of until cleanup is completed. Cleanup actions are taken by 242-A Evaporator personnel or other assigned personnel. DOE/RL-94-02, *Hanford Emergency Management Plan*, Section 9.2.3, describes actions to be taken.

Waste from cleanup activities is designated and managed as newly generated waste. Field checks for compatibility before storage is performed as necessary. Incompatible wastes are not placed in the same container. Containers of waste are placed in storage areas appropriate for their compatibility class.

If incompatibility of waste was a factor in the incident, the BED or the onsite recovery organization ensures that the cause is corrected.

7.3.6 Post-Emergency Equipment Maintenance and Decontamination

All equipment used during an incident is decontaminated (if practicable) or disposed of as spill debris. Decontaminated equipment is checked for proper operation before storage for subsequent use. Consumable and disposed materials are restocked. Fire extinguishers are recharged.

The BED ensures that all equipment is cleaned and fit for its intended use before operations are resumed. Depleted stocks of neutralizing and absorbing materials are replenished, self-contained breathing apparatus are cleaned and refilled, protective clothing is cleaned or disposed of and restocked, etc.

7.4 EMERGENCY EQUIPMENT

Hanford Site emergency resources and equipment are described and listed in DOE/RL-94-02, *Hanford Emergency Management Plan*, Appendix C. Emergency resources and equipment for the 242-A Evaporator are presented in this section.

7.4.1 Fixed Emergency Equipment

Type	Location	Capability
Safety shower/eye wash station	1 - Aqueous makeup room -south side. Next to truck load-in airlock and chemical storage tank. 1 - Condenser room basement, SE corner. 1 - Condenser room 4th floor	Assist in flushing chemicals/materials from body and/or eyes and face.
Wet pipe sprinkler system	Located throughout the facility.	Assist in the control of fire.
Fire alarm pull boxes	Located throughout the facility.	Activates the building fire alarm and notifies the HFD.
Emergency lighting (lanterns)	Located throughout the facility	Provide 1 hour of temporary lighting.
Back-up diesel generator	50 ft SE of the 242-A main entrance	Provide back-up power.

7.4.2 Portable Emergency Equipment

Type	Location	Capabilities
General purpose fire extinguishers	Throughout the 242-A Evaporator facility.	Fire suppression for class A, B, C, fires.
Halon fire extinguishers	Two in control room.	Suppress electrical fires.

7.4.3 Communications Equipment/Warning Systems

Type	Location	Capability
Fire alarms	Located throughout the facility in halls, corridors, and locker rooms.	Audible throughout the 242-A Evaporator Building
Roof siren	242-A Evaporator roof	Provide warning to personnel to take cover or evacuate.
Operations process alarms from MCS or hard wired alarm panels)	242-A Evaporator control room	Audible in the 242-A Evaporator control room.
Public address system (PAX)	Located throughout the 242-A Evaporator Building (except in pump and evaporator rooms)	Provides communications and public address capabilities.
Portable Radios	242-A control room	Communication to the 242-A control room.
Telephone	242-A control room, office areas, AMU room, and condenser room.	Internal and external communications. Allows notification of outside resources (HFD, Hanford Patrol, etc.)
Crash alarm	242-A control room	Audible in the 242-A control room

7.4.4 Personal Protective Equipment

Type	Location	Capability
Respirators	242-A respirator storage room	Filtered air for recovery of known hazards

7.4.5 Spill Control and Containment Supplies

Type	Location	Capability
Organic and inorganic spill kits.	Survey area next to personnel protective equipment storage room, wall mounted	Provides spill control for organic and inorganic materials

7.4.6 Incident Command Post

The ICPs for the 242-A Evaporator are in 242-A Evaporator control room or the 200 Area ETF control room. Emergency resource materials are stored at each location. The IC could activate the Hanford Fire Department Mobile Command Unit if necessary.

7.5 REQUIRED REPORTS

Post incident written reports are required for certain incidents on the Hanford Site. The reports are described in DOE/RL-94-02, *Hanford Emergency Management Plan*, Section 5.1.

Facility management must note in the TSD-unit operating record, the time, date and details of any incident that requires implementation of the contingency plan (refer to Section 4.0 of this plan). Within fifteen (15) days after the incident, a written report must be submitted to Ecology. The report must include the elements specified in WAC 173-303-360(2)(k).

7.6 PLAN LOCATION AND AMENDMENTS

Copies of this plan are maintained at the following locations:

- 242-A Evaporator Control Room
- 200 Area ETF Control Room
- Operations Managers Office (Building 2025EA Room 101)
- 200 Area LWPF Regulatory File

This plan will be reviewed and immediately amended as necessary, in accordance with DOE/RL-94-02, *Hanford Emergency Management Plan*, Section 14.3.1.1.

7.7 FACILITY/BUILDING EMERGENCY RESPONSE ORGANIZATION

242-A Evaporator Building Emergency Directors		
TITLE	WORK LOCATION	WORK PHONE
Shift Operation Manager (SOM)	242-A Evaporator control room or 200 Area ETF control room	373-2737, 242-A Evaporator control room 373-9000, 200 Area ETF control room
Operations Manager	2025EA/101	372-3142

Names and home telephone numbers of the BEDs are available from the POC (373-3800) in accordance with Hanford Facility RCRA Permit, Dangerous Waste Portion, General Condition II.A.4.

Figure 7.1. 242 A Evaporator Evacuation Routes

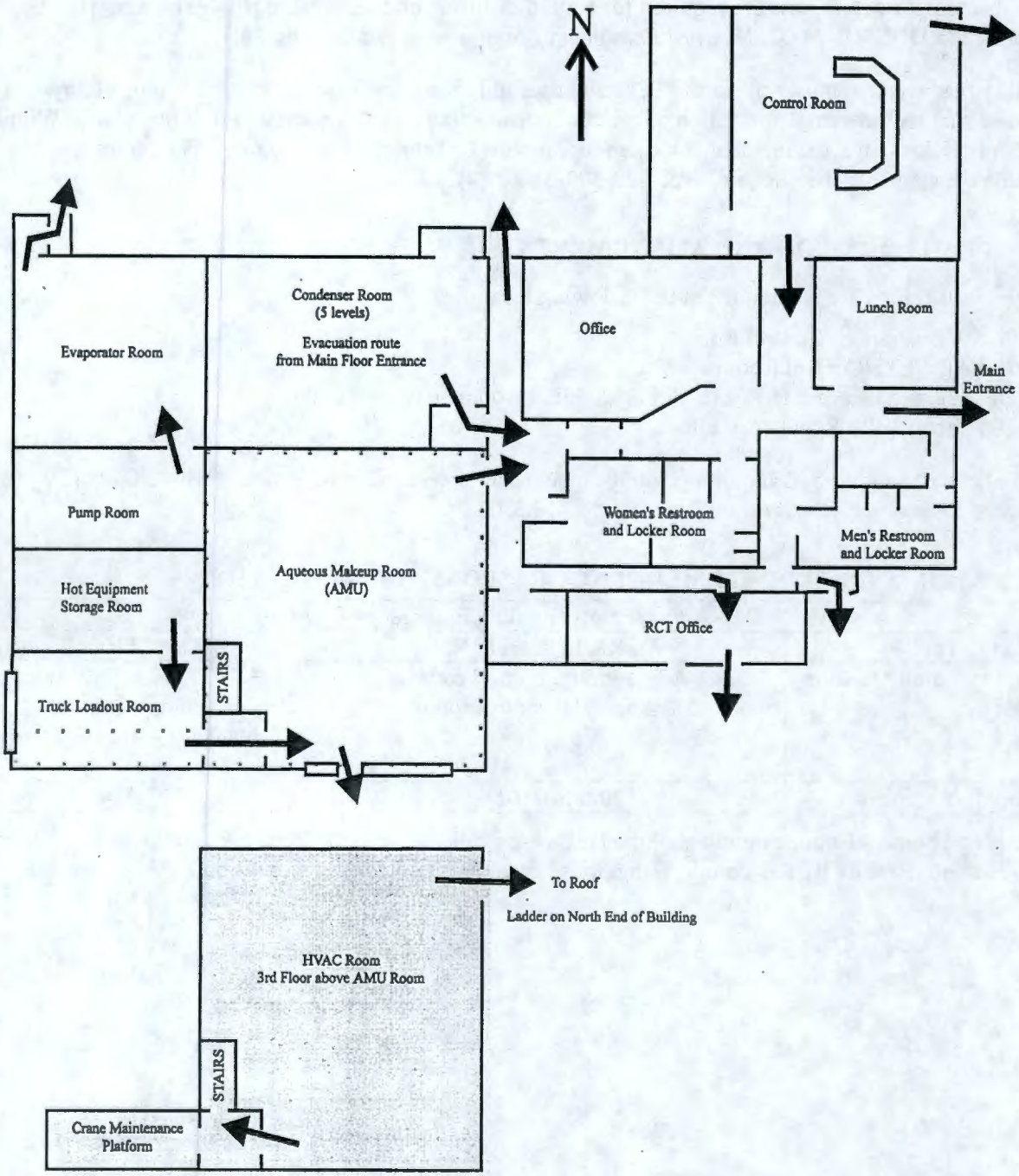

RCT: radiation control technologist
HVAC: heating, ventilation, and air conditioning

Figure 7.2. 242-A Evaporator Staging Areas

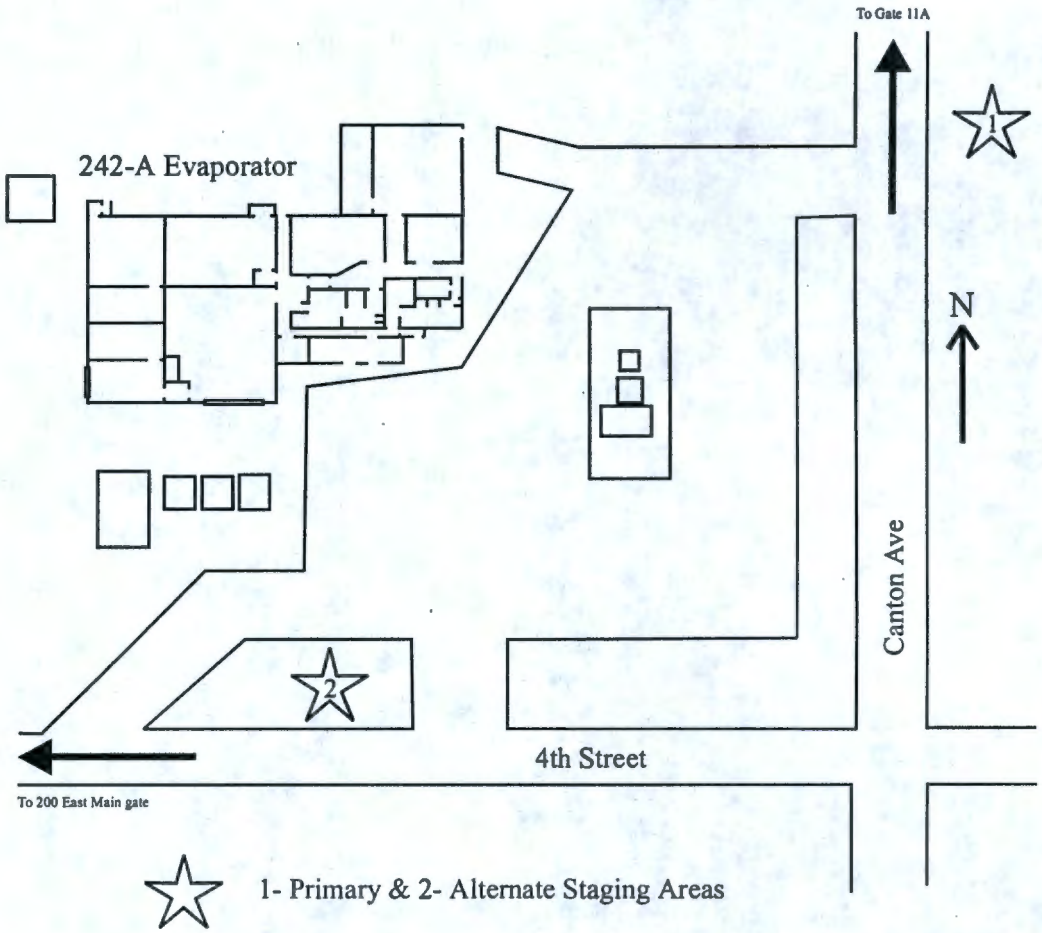

1
2
3
4
5

This page intentionally left blank.

Index

Page 2 of 5: Hanford Facility RCRA Permit, III.6.A

Modification of Interim Compliance Schedule Appendix 1.0

JLR 1/21/03

~~Attachment 1 to CCN 048820~~

050921

Hanford Facility RCRA Permit Modification Notification Form	
Unit: Hanford Tank Waste Treatment and Immobilization Plant (WTP), General Permit Provision	Permit Part & Chapter: Part III, Chapter 10, Attachment 51, Appendix 1.0

Description of Modification:

The proposed modification includes a request to change the interim compliance date for submittal of the Risk Assessment Workplan from 02/03/03 to 08/15/03. Permit condition III.10.C.11.a requires submission of the Risk Assessment Workplan in accordance with Attachment 51, Appendix 1.0 "WTP Interim Compliance Schedule" of the permit. The WTP Interim Compliance Schedule under item number 9 lists a submisison date of 02/03/03, which needs to be changed to 08/15/03. This type of modification is listed in WAC 173-303-830, Appendix I, as a Class [1]1 Permit Modification.

This modification is needed to allow the WTP project time to estimate and evaluate the environmental impacts of plant emissions that result from plant reconfiguration. The risk assessment assumptions and approaches may require modification based on this new design information. Additional time is needed for the technical discussuions with the regulatory agencies prior to finalizing the Risk Assessment Workplan.

Modification Class: [1 2 3]	Class 1	Class [1]1	Class 2	Class 3
Please check one of the Classes:		X		

Relevant WAC 173-303-830, Appendix I Modification: A.5.a, General Permit Provisions

Enter wording of the modification from WAC 173-303-830, Appendix I citation

Schedule of compliance: changes in interim compliance dates, with prior approval of the director

Submitted by Co-Operator:	Reviewed by ORP	Reviewed by Ecology:
R F Naventi 1/08/03	J E Rasmussen 1/21/03	S. Skurla L E Ruud 1/21/03
R. F. Naventi Date	J. E. Rasmussen Date	S. Skurla L. E. Ruud Date

WTP Interim Compliance Schedule
Appendix 1.0

Interim Compliance Schedule- WTP Facility		
	Compliance Schedule Submittal	Interim Compliance Date
	III.10.C.2	
1.	Submit documentation stating the WTP has been constructed in compliance with the Permit.	11/30/07
2.	Submit updated Site Transportation Report for incorporation into the Administrative Record.	12/31/03
	III.10.C.3	
3.	Revise and Submit Waste Analysis Plan and associated Quality Assurance Project Plan to Ecology for review and approval	08/12/05
	III.10.C.5.	
4.	Update and submit for approval "Procedures to Prevent Hazards", Chapter 6.0 Sections 6.3, 6.4, 6.5 and the Inspection Schedule.	08/01/06
	III.10.C.6	
5.	Update and submit the Contingency Plan	08/01/06
	III.10.C.7	
6.	Update and resubmit for review and approval Training Program description in Chapter 8 of the Permit.	08/01/06
7.	Submit under separate cover the actual WTP Dangerous Waste Training Plan for incorporation into Administrative Record.	08/01/06
	III.10.C.8	
8.	Update and resubmit the Closure Plan for approval	08/01/06
	III.10.C.11	
9.	Submit Risk Assessment Workplan, revised in consultation with Ecology.	08/15/03
	CONTAINERS	
10.	Submit detailed information associated with containers and container management areas	10/01/04
11.	Submit descriptions of container management practices	08/01/06
12.	Submit engineering information for each secondary containment and leak detection system for the WTP Tank System to be included in the permit	11/03/03
13.	Submit engineering information for each dangerous waste tank and primary sump to be	05/01/04

Interim Compliance Schedule- WTP Facility		
	Compliance Schedule Submittal	Interim Compliance Date
	included in the permit	
14.	Submit engineering information for each tank system ancillary equipment to be included in the permit	05/01/04
15.	Submit descriptions of tank management practices	08/01/06
	CONTAINMENT BUILDINGS	
16.	Submit engineering information for each containment building to be included in the permit	02/01/04
17.	Submit descriptions of containment building management practices	08/01/06
	PRETREATMENT PLANT MISC. UNITS SYSTEMS	
18.	Submit engineering information for secondary containment and leak detection system for the Pretreatment Plant Miscellaneous Unit Systems	09/16/03
19.	Submit engineering information for Pretreatment Plant Miscellaneous Unit Systems	10/01/04
20.	Submit engineering information for Pretreatment Plant Miscellaneous Unit Systems equipment	10/01/04
21.	Submit descriptions of management practices for the Pretreatment Miscellaneous Treatment System	07/01/07
	LAW SHORT TERM MELTER UNIT	
22.	Submit engineering information for LAW Vitrification Miscellaneous Treatment Unit secondary containment	03/01/04
23.	Submit engineering information for LAW Vitrification Miscellaneous Treatment Unit sub-system	05/01/04
24.	Submit engineering information for equipment for each LAW Vitrification Miscellaneous Treatment Unit sub-system	05/01/04
25.	Submit descriptions of management practices for the LAW Vitrification Miscellaneous Treatment System	08/01/06
26.	Submit LAW Vitrification Environmental Performance Demonstration Test Plan for Ecology review and approval	08/01/06
	HLW SHORT TERM MELTER UNIT	
27.	Submit engineering information for HLW Vitrification Miscellaneous Treatment Unit secondary containment	03/01/03

Interim Compliance Schedule- WTP Facility		
	Compliance Schedule Submittal	Interim Compliance Date
28.	Submit engineering information for HLW Vitrification Miscellaneous Treatment Unit sub-system	08/01/03
29.	Submit engineering information for equipment for each HLW Vitrification Miscellaneous Treatment Unit sub-system	08/01/03
30.	Submit descriptions of management practices for the HLW Vitrification Miscellaneous Treatment System	01/02/07
31.	Submit HLW Vitrification Environmental Performance Demonstration Test Plan for Ecology review and approval	01/02/07
32.	Final Compliance Date	12/31/07

Hanford Facility RCRA Permit Modification Notification Forms

Part III, Chapter 10 and Attachment 51

Waste Treatment and Immobilization Plant

January 16, 2003

Index

Page 2 of 4: Hanford Facility RCRA Permit, III.6.A

Modification of Interim Compliance Schedule Appendix 1.0

FEB 2 0 2003

Hanford Facility RCRA Permit Modification Notification Form	
Unit:	Permit Part & Chapter:
Waste Treatment and Immobilization Plant	**Part III, Chapter 10 and Attachment 51**

Description of Modification: The purpose of this permit modification is to update an interim compliance date in the WTP Interim Compliance Schedule Appendix 1.0 (Item 27).

Attachment 51, Chapter : 10, Volume II, Appendix 1.0

Redline/strikeout of modification:

	Compliance Schedule Submittal	Interim Compliance Date
27.	Submit engineering information for HLW Vitrification Miscellaneous Treatment Unit secondary containment	~~3/01/03~~ 11/21/03

Modification Class: [1 2 3]	Class 1	Class [1]1	Class 2	Class 3
Please check one of the Classes:		X		

Relevant WAC 173-303-830, Appendix I Modification: A.5.a

Enter wording of the modification from WAC 173-303-830, Appendix I citation

Schedule of Compliance: Changes in interim compliance dates, with prior approval of the director.

Submitted by Co-Operator:	Reviewed by ORP:	Reviewed by Ecology:	Reviewed by Ecology:
2/19/03	2/20/03	2/24/2003	2/25/03
Date	Date	S. Dahl Date	Laura Ruud Date

[1] Class 1 modifications requiring prior Agency approval.

[2] This is only an advanced notification of an intended Class [1]1, 2, or 3 modification, this should be followed with a formal modification request, and consequently implement the required Public Involvement processes when required.

[3] If the proposed modification does not match any modification listed in WAC 173-303-830 Appendix I, then the proposed modification should

Index

WTP Interim Compliance Schedule
Appendix 1.0

Interim Compliance Schedule- WTP Facility		
	Compliance Schedule Submittal	Interim Compliance Date
	III.10.C.2	
1.	Submit documentation stating the WTP has been constructed in compliance with the Permit.	11/30/07
2.	Submit updated Site Transportation Report for incorporation into the Administrative Record.	12/31/03
	III.10.C.3	
3.	Revise and Submit Waste Analysis Plan and associated Quality Assurance Project Plan to Ecology for review and approval	08/12/05
	III.10.C.5.	
4.	Update and submit for approval "Procedures to Prevent Hazards", Chapter 6.0 Sections 6.3, 6.4, 6.5 and the Inspection Schedule.	08/01/06
	III.10.C.6	
5.	Update and submit the Contingency Plan	08/01/06
	III.10.C.7	
6.	Update and resubmit for review and approval Training Program description in Chapter 8 of the Permit.	08/01/06
7.	Submit under separate cover the actual WTP Dangerous Waste Training Plan for incorporation into Administrative Record.	08/01/06
	III.10.C.8	
8.	Update and resubmit the Closure Plan for approval	08/01/06
	III.10.C.11	
9.	Submit Risk Assessment Workplan, revised in consultation with Ecology.	08/15/03
	CONTAINERS	
10.	Submit detailed information associated with containers and container management areas	10/01/04
11.	Submit descriptions of container management practices	08/01/06
2.	Submit engineering information for each secondary containment and leak detection system for the WTP Tank System to be included in the permit	11/03/03
13.	Submit engineering information for each dangerous waste tank and primary sump to be included in the permit	05/01/04
14.	Submit engineering information for each tank system ancillary equipment to be included in the permit	05/01/04

Interim Compliance Schedule- WTP Facility		
	Compliance Schedule Submittal	Interim Compliance Date
15.	Submit descriptions of tank management practices	08/01/06
	CONTAINMENT BUILDINGS	
16.	Submit engineering information for each containment building to be included in the permit	02/01/04
17.	Submit descriptions of containment building management practices	08/01/06
	PRETREATMENT PLANT MISC. UNITS SYSTEMS	
18.	Submit engineering information for secondary containment and leak detection system for the Pretreatment Plant Miscellaneous Unit Systems	09/16/03
19.	Submit engineering information for Pretreatment Plant Miscellaneous Unit Systems	10/01/04
20.	Submit engineering information for Pretreatment Plant Miscellaneous Unit Systems equipment	10/01/04
21.	Submit descriptions of management practices for the Pretreatment Miscellaneous Treatment System	07/01/07
	LAW SHORT TERM MELTER UNIT	
22.	Submit engineering information for LAW Vitrification Miscellaneous Treatment Unit secondary containment	03/01/04
23.	Submit engineering information for LAW Vitrification Miscellaneous Treatment Unit sub-system	05/01/04
24.	Submit engineering information for equipment for each LAW Vitrification Miscellaneous Treatment Unit sub-system	05/01/04
25.	Submit descriptions of management practices for the LAW Vitrification Miscellaneous Treatment System	08/01/06
26.	Submit LAW Vitrification Environmental Performance Demonstration Test Plan for Ecology review and approval	08/01/06
	HLW SHORT TERM MELTER UNIT	
27.	Submit engineering information for HLW Vitrification Miscellaneous Treatment Unit secondary containment	11/21/03
28.	Submit engineering information for HLW Vitrification Miscellaneous Treatment Unit sub-system	08/01/03
29.	Submit engineering information for equipment for each HLW Vitrification Miscellaneous Treatment Unit sub-system	08/01/03
30.	Submit descriptions of management practices for the HLW Vitrification Miscellaneous Treatment System	01/02/07
31.	Submit HLW Vitrification Environmental Performance Demonstration Test Plan for Ecology review and approval	01/02/07
32.	Final Compliance Date	12/31/07