1244042
[00713/SH]

Department of Energy
Richland Operations Office
P.O. Box 550
Richland, Washington 99352

17-AMRP-0159

MAY 1 2 2017

Ms. Alexandra K. Smith, Program Manager
Nuclear Waste Program
Washington State Department of Ecology
3100 Port of Benton Boulevard
Richland, Washington 99354

Dear Ms. Smith:

REVISED WASTE ENCAPSULATION STORAGE FACLITY (WESF) PART B PERMIT APPLICATION PER IMPLEMENTATION OF PROJECT W-130 MODIFICATIONS

This letter transmits the subject revised WESF Part B Permit Application. All revisions to the WESF Part B Permit Application were made in accordance with Section 1.2.1.2 of the WESF and CSA Permitting Plan in Washington State Department of Ecology's (Ecology) January 26, 2015, letter 15-NWP-024 which explicitly states:

> "RL will revise the current WESF Part B Permit Application to reflect the changes required for the Project W-130 ventilation replacement and contamination stabilization project. RL will submit a certified copy to Ecology to maintain a current application, and Ecology will not act on the revised application at this time. Compliance with Part B application requirements [WAC 173-303-806(2), "Final Facility Permits"] will be maintained for the following addendums:
>
> - Process information
> - Security
> - Preparedness and prevention
> - Training plan
> - Closure plan for entire WESF
> - Inspection plan
> - Contingency plan"

RECEIVED
MAY 1 8 2017
EDMC

The WESF Part B Permit Application certification statement is provided in Attachment 1. Attachment 2 provides a clean version of the revised WESF Part B Permit Application based on the Hanford Sitewide Dangerous Waste Permit (Revision 9) draft. Please note that Attachment 2 includes a sub-attachment containing the redline-strikeouts of the WESF Part B Permit Application in accordance with the WESF and CSA Permitting Plan (15-NWP-024).

S-2-10

If you have any questions, please contact me, or your staff may contact Tom Teynor, Deputy Assistant Manager for the River and Plateau, on (509) 373-9971.

Sincerely,

Doug S. Shoop
Manager

AMRP:DBC

Attachments:
1. Certification Statement
2. Clean Version of the Revised WESF Part B Permit Application

2A. Red-line Strikeout Changes to the WESF Part B Permit Application

cc w/attachs:
D. B. Bartus, EPA
L. J. Cusack, CHPRC
S. L. Dahl-Crumpler, Ecology
D. L. Flyckt, CHPRC
M. T. Gillespie, CHPRC
M. N. Jaraysi, CHPRC
S. K. Johansen, CHPRC
S. N. Schleif, Ecology
Administrative Record, (TSD: S-2-10)
Ecology NWP Library (Hardcopy)
Environmental Portal
HF Operating Record (J. K. Perry, MSA, A3-01)

cc w/o attachs:
G. Bohnee, NPT
R. Jim, YN
D. Rowland, YN
R. Skeen, CTUIR

Certification Statement
Washington Administrative Code Dangerous Waste Regulations

The following certification statement is provided in accordance with WAC 173-303-810 for the submittal of the revised WESF Part B Permit Application.

I certify under penalty of law that this document and all attachments were prepared under my direction or supervision in accordance with a system designed to assure that qualified personnel properly gather and evaluate the information submitted. Based on my inquiry of the person or persons who manage the system, or those persons directly responsible for gathering the information, the information submitted is, to the best of my knowledge and belief, true, accurate, and complete. I am aware that there are significant penalties for submitting false information, including the possibility of fine and imprisonment for knowing violations.

Doug S. Shoop
Manager
U.S. Department of Energy
Richland Operations Office

5/12/17
Date

L. Ty Blackford
President and Chief Executive Officer
CH2M HILL Plateau Remediation Company

4/27/2017
Date

ATTACHMENT 2

CHPRC-1701573
CONTRACT NUMBER DE-AC06-08RL14788

REVISED WESF PART B PERMIT APPLICATION PER IMPLEMENTATION OF PROJECT W-130 MODIFICATION DOE/RL-2016-72 REVISION 0

Consisting of 267 pages,
including this cover page

DOE/RL-2016-72
Revision 0

Revised WESF Part B Permit Application per Implementation of Project W-130 Modification

Prepared for the U.S. Department of Energy
Assistant Secretary for Environmental Management

Contractor for the U.S. Department of Energy
under Contract DE-AC06-08RL14788

P.O. Box 1600
Richland, Washington 99352

Approved for Public Release;
Further Dissemination Unlimited

DOE/RL-2016-72
Revision 0

Revised WESF Part B Permit Application per Implementation of Project W-130 Modification

Program/Project: Waste and Fuels Management Project

L. Hare
CH2M HILL Plateau Remediation Company

Date Published
December 2016

Prepared for the U.S. Department of Energy
Assistant Secretary for Environmental Management

Contractor for the U.S. Department of Energy
under Contract DE-AC06-08RL14788

P.O. Box 1600
Richland, Washington 99352

APPROVED
By Lana Perry at 1:00 pm, Jan 05, 2017

Release Approval Date

Approved for Public Release;
Further Dissemination Unlimited

TRADEMARK DISCLAIMER

Reference herein to any specific commercial product, process, or service by tradename, trademark, manufacturer, or otherwise, does not necessarily constitute or imply its endorsement, recommendation, or favoring by the United States Government or any agency thereof or its contractors or subcontractors.

This report has been reproduced from the best available copy.

Printed in the United States of America

Addendum C

Process Information

This page intentionally left blank.

Contents

C1 Introduction and Operating Unit Group Description C-1

C1.1 Dangerous Waste Management Unit Descriptions C-3

C1.1.1 Hot Cell G DWMU C-4

C1.1.2 Pool Cells DWMU C-6

C1.2 List of Wastes and Maximum Waste Inventories C-14

C1.2.1 Hot Cell G DWMU Maximum Waste Inventory C-14

C1.2.2 Pool Cells DWMU Maximum Waste Inventory C-14

C2 Process Information C-14

C2.1 Description of Capsules C-15

C2.1.1 Condition C-18

C2.1.2 Identification and Labeling C-18

C2.1.3 Waste Compatibility C-18

C2.2 Capsule Management Practices C-18

C2.2.1 Capsule Handling C-19

C2.2.2 Aisle Spacing C-19

C2.2.3 Inspections C-19

C2.3 Containment Requirements for Storing Capsules C-19

C2.3.1 Controlling Run-On and Runoff C-20

C2.4 Prevention of Reaction of Ignitable, Reactive, and Incompatible Waste in WESF C-20

C2.5 Air Emissions C-20

C2.5.1 Applicability of Subpart AA Standards C-20

C2.5.2 Applicability of Subpart BB Standards C-20

C2.5.3 Applicability of Subpart CC Standards C-20

C3 Analysis of Miscellaneous Unit Regulatory Requirements Pursuant to WAC 173-303-680 ..... C-21

C4 Training C-21

Figures

Figure C-1. WESF 225-B Building First Floor Plan C-2
Figure C-2. WESF 225-B Building Second Floor Plan C-2
Figure C-3. WESF 225-B Building East/West Sectional View C-3
Figure C-4. WESF 225-B Building North/South Sectional View C-3
Figure C-5. Hot Cell G Windows and Manipulators (June 2001) C-5
Figure C-6. K3N Process Flow Diagram C-7
Figure C-7. Pool Cell Circulation and Drain Lines C-9
Figure C-8. Isometric Drawing of Pool Cell Systems C-11
Figure C-9. K1, K2, and K4 Ventilation Systems C-13
Figure C-10. Cesium Capsule C-16
Figure C-11. Strontium Capsule C-17
Figure C-12. Type W Overpack (Typical) C-17

Table

Table C-1. Capsule Properties C-15

C1 Introduction and Operating Unit Group Description

This addendum provides a description of storage operations in effect at the Waste Encapsulation and Storage Facility (WESF) Operating Unit Group.

WESF is located in the northwestern portion of the 200 East Area of the Hanford Facility and consists of the main 225-B Building, which adjoins B Plant on the west end, as well as numerous support buildings and systems. The 225-B Building is approximately 47.9 m (157 ft) long by 30 m (97 ft) wide by 12 m (40 ft) high and is constructed of steel reinforced concrete that is partitioned into seven hot cells (A through G), the hot cell service area, operating areas, building service areas, and the pool cell area consisting of Pool Cells 1 through 12 (Figures C-1 through C-4).

The main, two-story, approximately 1,858 m^2 (20,000 ft^2) building (225-B) houses the three WESF dangerous waste management units (DWMUs), one closing unit and two operating units as indicated below:

- Hot Cells A through F (*Closing*)
- Hot Cell G (*Operating*)
- Pool Cells (*Operating*)

(Note: Since the Hot Cells A through F DWMU is considered a closing unit, further information regarding this DWMU is not provided in this addendum. Refer to Part V, *Closure Units*, of the *Hanford Facility Resource Conservation and Recovery Act Permit* (hereinafter referred to as the Hanford Facility RCRA Permit), identification number WA 7890008967, for further details on the WESF Hot Cells A through F.)

WESF operations provide for continued safe storage and maintenance of the 1,936 capsules containing cesium chloride and strontium fluoride salts (i.e., mixed waste). The WESF capsules meet the definition of "container" as defined in WAC 173-303-040, "Dangerous Waste Regulations," "Definitions." However, due to the unique characteristics of the capsules and radioactive component of the mixed waste, WESF storage operations differ from the standard container management requirements of WAC 173-303-630, "Use and Management of Containers." Therefore, WESF is considered a miscellaneous storage unit. For further discussion on the analysis of miscellaneous unit regulatory requirements pursuant to WAC 173-303-680, "Miscellaneous Units," refer to Section C3.

Due to the radioactive nature of the mixed waste contents, all cesium and strontium capsules are stored underwater. Underwater storage of the capsules provides necessary radiation shielding for the worker protection and cooling for the capsules. Capsule storage, maintenance, and management operations are designed to maintain structural integrity and, therefore, ensure that the sealed capsules will not rupture or leak.

WESF has been designed and constructed to isolate and maintain confinement of the encapsulated mixed waste during normal storage conditions as well as in the event of a natural phenomenon or manmade accident over the design life of the facility. WESF storage and maintenance operations are designed to protect human health and the environment from the encapsulated mixed waste.

Please note that the terms "mixed waste" and/or "waste", when used in this document, refer to dangerous waste or hazardous waste, as applicable.

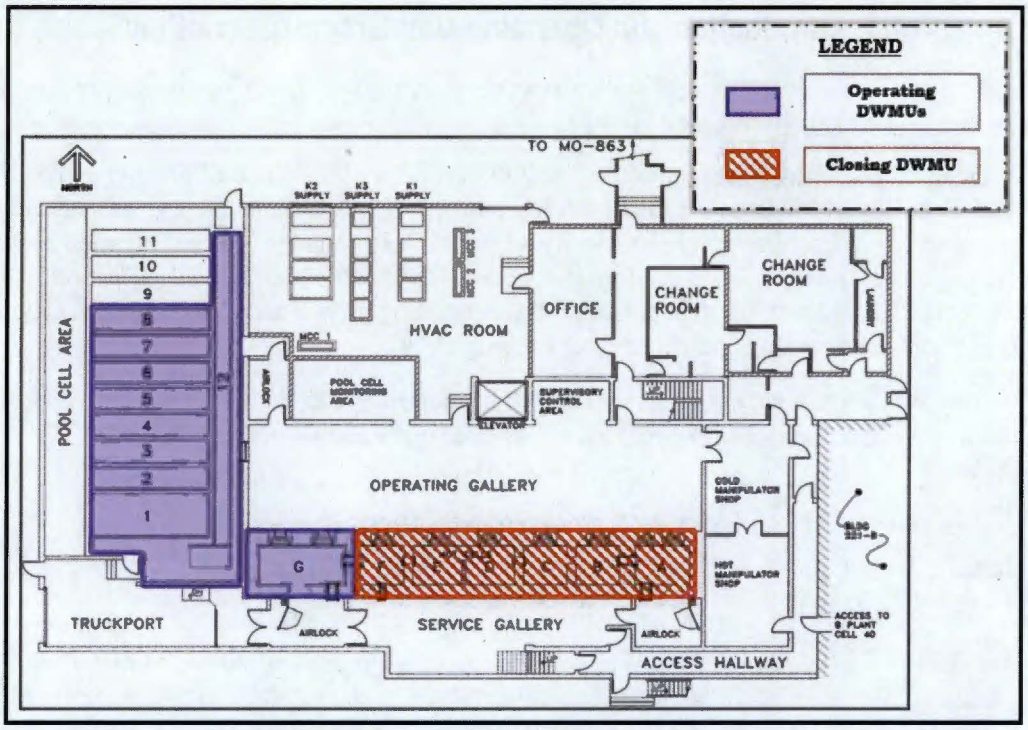

Figure C-1. WESF 225-B Building First Floor Plan

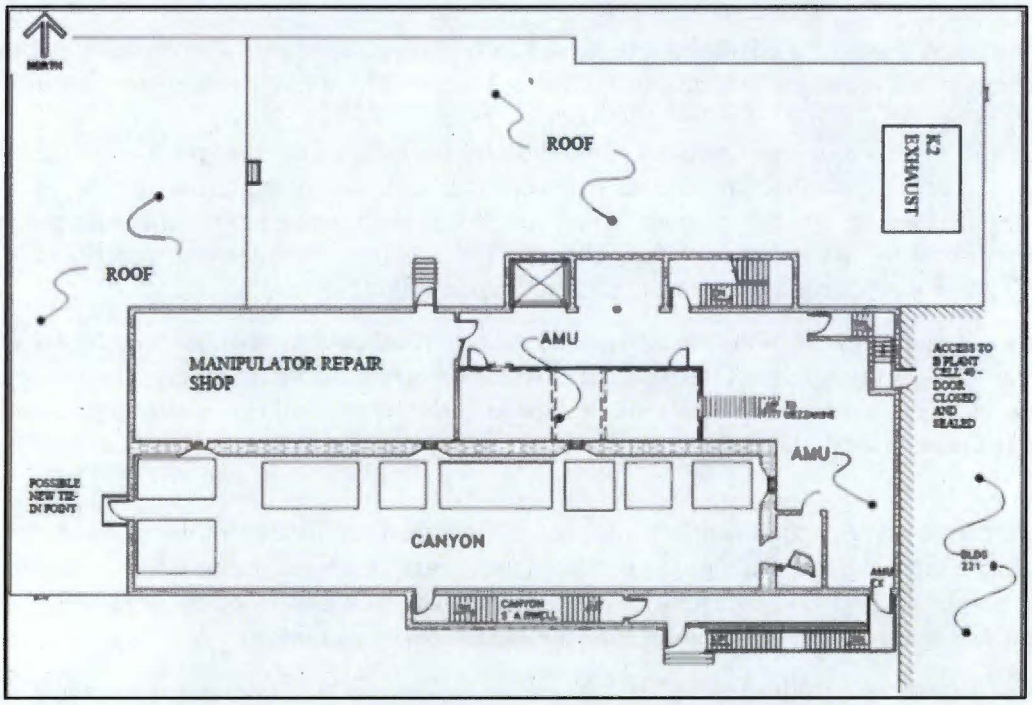

Figure C-2. WESF 225-B Building Second Floor Plan

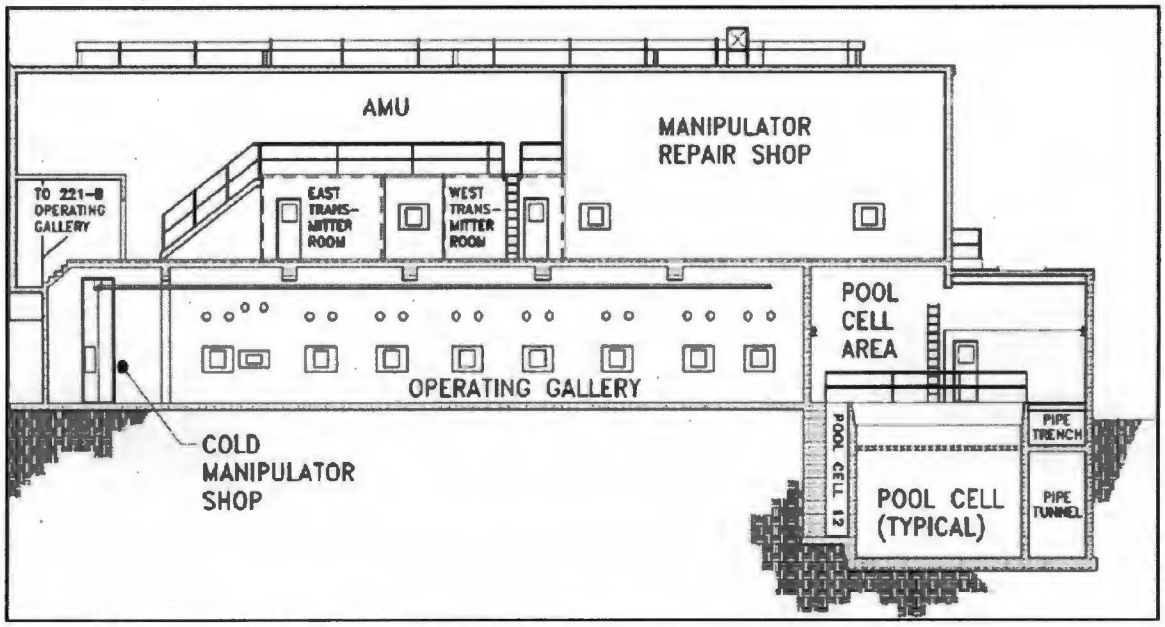

Figure C-3. WESF 225-B Building East/West Sectional View

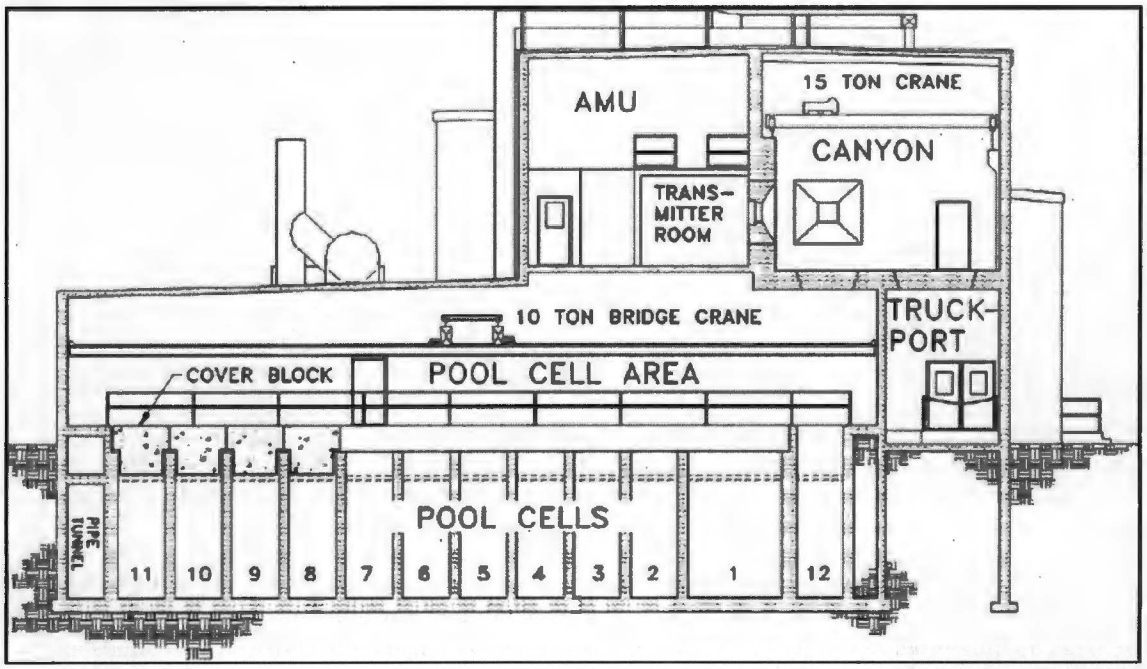

Figure C-4. WESF 225-B Building North/South Sectional View

C1.1 Dangerous Waste Management Unit Descriptions

WESF consists of two operating DWMUs as depicted in Figure C-1. The Hot Cell G and Pool Cells DWMUs remain operational since both are necessary for continued maintenance and storage of the cesium and strontium capsules. The capsules are normally stored underwater which provides radioactive shielding and helps remove heat generated by the capsules. Pool Cells 1, 3 through 7, and 12

(when deemed necessary) store the cesium and strontium capsules, while Hot Cell G provides a dry storage location for suspect or failed capsules.

C1.1.1 Hot Cell G DWMU

Hot Cell G is constructed of high-density concrete with inner dimensions of approximately 4.9 m (16 ft) long by 2 m (8 ft) wide by 4.11 m (13.5 ft) high, with approximately 89 cm (35 in.) thick walls. The floor of the hot cell consists of an approximate 3 cm (1 in.) steel plate across the top of the hot pipe trench, then 0.64 cm (0.25 in.) of lead topped with 17.1 cm (6.75 in.) of high-density concrete, for a total floor thickness of approximately 20 cm (8 in.). The floors and walls are painted with white, radiation and corrosion resistant paint. Removable cover blocks approximately 76 cm (30 in.) thick, top the hot cell, providing access to the canyon through the cell ceiling.

Service piping is embedded in the concrete walls of Hot Cell G. Service piping includes utility services (e.g., air, water, and electricity) that support process equipment operation. A shielded personnel entry door located on the south wall of Hot Cell G allows personnel access into the hot cell from the Hot Cell G Airlock. The door is approximately 2.3 m (7.4 ft) high by 1.2 m (4 ft) wide and 0.91 m (3 ft) thick, consisting of a steel plate frame filled solid with magnetite concrete. The door weighs approximately 10,251 kg (22,600 lb) and is automatically operated by a hydraulic-pneumatic system.

Hot Cell G is equipped with the two pass-throughs with shielding doors for passage of small equipment and solid waste. One is located in the east wall of the hot cell leading to Hot Cell F, while the other transfer drawer is located in the south wall of the hot cell and is accessible from the service gallery (Hot Cell G Airlock). The pass-throughs are approximately 36 cm (14 in.) wide by 46 cm (18 in.) high. As part of the initial closure activities for Hot Cells A through F DWMU (described in the "Waste Encapsulation and Storage Facility Hot Cells A Through F Dangerous Waste Management Unit Closure Plan" located in Part V of the Hanford Facility RCRA Permit), the pass-through leading to Hot Cell F was sealed to prevent grout and any potential contamination from flowing into Hot Cell G.

Two oil filled, lead glass windows are located on the north wall of Hot Cell G (Figure C-5). These windows provide for shielding and direct viewing into the hot cell from the operating gallery. The viewing windows are composed of approximately 25 cm (10 in.) of 3.3 g/cm^3 lead glass (hot cell side) and 39.6 cm (15.6 in.) of 6.2 g/cm^3 lead glass (operating gallery side). The oil barrier separating the glass sections allows light to pass through the windows for viewing purposes. The soft lead glass is protected by cerium stabilized, nonbrowning, tempered glass on the hot cell side and tempered glass on the operating gallery side.

Hot Cell G has wall ports for four manipulators on the north wall of the cell leading to the operating gallery (two at each Hot Cell G viewing window as shown in Figure C-5). The manipulators can be installed or removed from the cell through approximately 25 cm (10 in.) diameter ports in the wall. All four manipulators are active and remain functional to support Hot Cell G operations.

Mechanical manipulators are designed to reproduce the natural movements and forces of the human hand and arm. The manipulators are equipped with a flexible booting that fits over the slave tong body and wrist. This booting protects the slave end from gross contamination and the corrosive cell atmosphere, while providing an air barrier between the hot cell and the operating gallery. Manipulators were originally installed in the hot cells to support encapsulation and maintenance operations, allowing process personnel to work remotely in the hot cell while operating the equipment from the operating gallery; therefore, protecting the workers from high levels of radiation and contamination.

Figure C-5. Hot Cell G Windows and Manipulators (June 2001)

Hot Cell G contains a 2-ton capacity hoist that is controlled from the operating gallery. There is also an approximate 0.6 m (2 ft) wide by 0.9 m (3 ft) long by 1 m (4 ft) high inspection table located in Hot Cell G in close proximity to northern cell wall near the west viewing window.

A penetration through the northwestern corner of the Hot Cell G floor leading into Pool Cell 12 provides the capability to transfer capsules between the two areas via a manually operated transfer cart and trolley system. The capsule transfer chute, which houses the transfer cart, is approximately 14 cm (5.5 in.) in diameter and penetrates through the floor at an angle, extending several inches above the cell floor. The portion of the capsule transfer chute that is above the cell floor has been cut in half to serve as a cradle for the transfer cart and capsule.

G-7 shielded storage, located on the floor next to the northern cell wall between the hot cell viewing windows, can be used to store up to nine failed capsules. The shielded storage lid is operated pneumatically and contains a locking mechanism to prevent inadvertent opening of the lid. The shielded storage device is approximately 81 cm (32 in.) in diameter and 110 cm (42 in.) high and weighs approximately 5,440 kg (12,000 lb).

An approximate 30 cm (12 in.) wide by 41 cm (16 in.) long by 13 cm (5 in.) open-topped, stainless steel lined sump is recessed in the floor of Hot Cell G next to the east wall. A diaphragm pump was installed the fall of 1998 to transfer any liquids collected in the sump to the radioactive low-level waste tank (Tank-100). However, as part of the initial closure activities for the Hot Cells A through F DWMU (described in the "Waste Encapsulation and Storage Facility Hot Cells A Through F Dangerous Waste Management Unit Closure Plan" located in Part V of the Hanford Facility RCRA Permit), all hot cells (including Hot Cell G) were isolated from this tank.

C1.1.1.1 Supporting Systems

Fire Protection System. Hot Cell G is equipped with a manually activated water spray fire protection system that can be actuated from the operating gallery. Raw water supplies the fixed and manipulator directed spray nozzles within the hot cell. Hot Cell G also contains a heat detection system that, when activated, alarms within the building as well as through the fire alarm panel notifying the Hanford Fire Department.

K3N Ventilation System. The ventilation system at WESF is designed to produce pressure boundaries that prevent migration from areas with high potential for contamination with radioactive particulates to areas with less potential for contamination to the atmosphere. Areas with high potential for contamination are maintained at a negative pressure with respect to uncontaminated areas; therefore, air flows from areas of lower potential contamination to areas of higher potential contamination. There are four separate supply systems and three separate exhaust systems that service the confinement areas at WESF. Hot Cell G is ventilated by the K3N exhaust ventilation system (Figure C-6), which also ventilates the canyon as well Tank-100.

The K3N exhaust fan draws air from the canyon and Hot Cell G, passing it through the K3N high-efficiency particulate air (HEPA) filters before it exits through the monitored 296-B-10 stack. The K3N system consists of a filter housing with two redundant exhaust fans. The filter housing includes two HEPA sections in series with each HEPA section consisting of six individual HEPA filters.

C1.1.2 Pool Cells DWMU

The pool cell area, located on the west end of the 225-B Building, is approximately 10 m (34 ft) wide by 22 m (72 ft) long by 4.0 m (13 ft) high (Figure C-1). The pool cell area has 12 pool cells that support underwater storage of the cesium and strontium capsules; however, only Pool Cells 1 through 8 and 12 comprise the Pool Cells DWMU. (Note: Information pertaining to Pool Cells 9, 10, and 11 has been added for informational purposes only.)

All pool cells are constructed of reinforced structural concrete with stainless steel liners. The pool cell liners are constructed of 16-gauge type 304 stainless steel on the sides of the pool cells, while the flooring is constructed of 14-gauge type 304 stainless steel. The pool cell walls are approximately 30 cm (12 in.) thick, while the pool cell floors are approximately 23 cm (21 in.) thick (with the exception of Pool Cell 12 which is approximately 46 cm [18 in.] thick).

Pool Cell 1 is approximately 2.67 m (8.75 ft) wide by 6.629 m (21.75 ft) long and 5.5 m (18 ft) deep. Pool Cells 2 through 11 are approximately 1.35 m (4.42 ft) wide by 6.629 m (21.75 ft) long and 5.5 m (18 ft) deep. Pool Cell 12 is approximately 0.9 m (3 ft) wide by 19.79 m (64.92 ft) long and 4.72 m (15.5 ft) deep. Pool Cell 12 runs along the east end of Pool Cells 1 through 11 and contains a cask pit located at the southern end of the pool. The cask pit is approximately 1.35 m (4.42 ft) wide by 2.26 m (7.42 ft) long and 5.5 m (18 ft) deep.

The pool cell pipe tunnel runs along the west side of Pool Cells 1 through 11 and the north side of Pool Cells 11 and 12. The pipe tunnel is approximately 2.3 m (7.5 ft) wide by 21.8 m (71.5 ft) long and 3.734 m (12.25 ft) deep as it runs along the west side of Pool Cells 1 through 11, and approximately 8.153 m (26.75 ft) wide by 1.09 m (3.58 ft) long and 3.734 m (12.25 ft) deep as it runs along the north side of Pool Cells 11 and 12 with a section that is approximately 0.9 m (3 ft) wide by 1.32 m (4.33 ft) long. The approximately 0.3 m (1 ft) thick pipe tunnel ceiling is the floor of the pool cell pump trench, which contains the pool cell circulation pumps. All dimensions of the pump trench are the same as the pipe tunnel except for the depth, which is 1.5 m (5.0 ft). The top of the pool cell pump trench is the floor of the pool cell area.

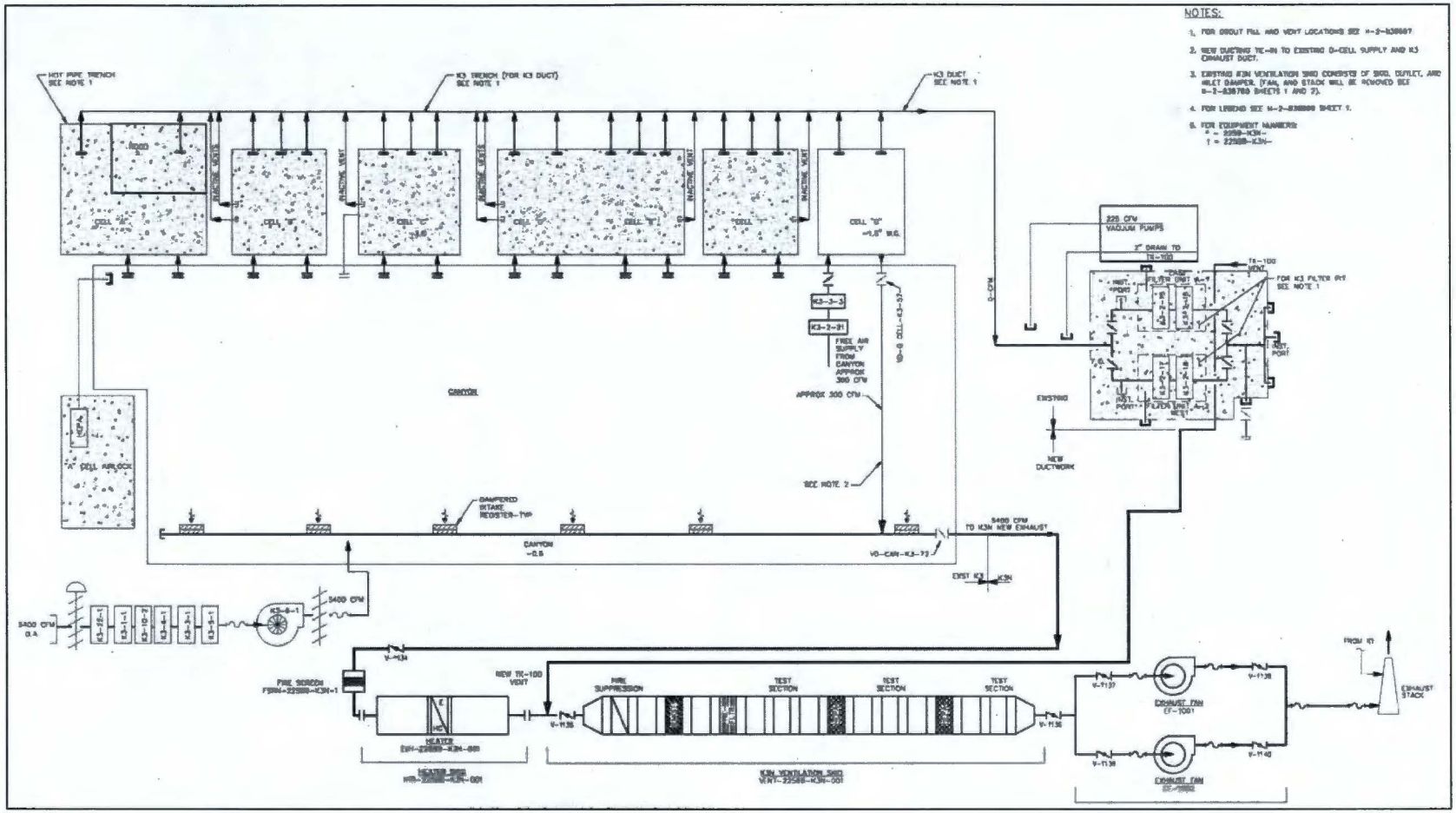

Figure C-6. K3N Process Flow Diagram

There are three personnel access doors, approximately 0.9 m (3 ft) wide by 2 m (7 ft) high, in the pool cell area. There is an access door located on the east wall, which leads to the operating gallery through an airlock. Another access door is located on the south wall, which leads to the truckport. The final access door is located in the northeastern corner of the pool cell area and leads to the outside. This access door is normally kept closed for ventilation control; however, the door can be opened in the event of an emergency to provide for passive ventilation of the pool cell area.

C1.1.2.1 Pool Cell Transfer Ports and Piping

Transfer Ports

Transfer ports (i.e., manually operated ball valves) connect Pool Cells 1 through 11 to Pool Cell 12 and are used to transfer capsules or water between the pool cells. Each transfer port is located approximately 0.9 m (3 ft) above the pool cell floor and contains a manual indicator which displays the valve position (open versus closed).

Pool Cell Circulation Lines

Each pool cell has a stainless steel circulation line that is approximately 7.6 cm (3.0 in.) in diameter. This line extends horizontally from the pool cell distribution header through the pool cell liner and wall into the pipe tunnel before curving upward, extending vertically through the pipe tunnel ceiling where it connects to the pool cell heat exchanger. A simplified schematic of the pool cell circulation lines is shown in Figure C-7.

Pool Cell Drain Lines

Approximately 1 cm (0.5 in.) above each pool cell floor there is an abandoned stainless steel drain line that is approximately 5 cm (2 in.) in diameter. Each pipe runs through the pool cell liner and wall into the pipe tunnel before curving upward and extending vertically where it embeds in the pipe tunnel ceiling. A simplified schematic of the pool cell drain lines is shown in Figure C-7.

Pool Cell 12 Fill Pipe

A schedule 40 painted carbon steel fill pipe extends from Pool Cell 12, through the metal cover plate located on the north end of Pool Cell 12, and through the north wall of the pool cell area just west of the personnel access door. The fill pipe is approximately 6.4 cm (2.5 in.) in diameter and has a total length of less than 2 m (7 ft). There are no plugs or valves associated with the fill pipe, except for the dust cap, which covers the standard fire hose connection on the outside end of the pipe.

C1.1.2.2 Pool Cell Monitoring Equipment and Systems

Temperature Monitoring, Heat Exchanger, and Cooling Systems

The pool cells are equipped with water temperature indicators and alarms. Water temperatures are displayed and controlled in the pool cell monitoring area adjacent to and accessible from the operating gallery (Figure C-1).

To remove heat generated by the capsules, Pool Cells 1 and 3 through 7 are each equipped with a heat exchanger and circulation pump that continuously circulates the pool cell water (Figures C-7 and C-8). The circulated water passes through a spiral heat exchanger and is then returned to the bottom of the pool cell via three distributors. This system helps remove heat generated by the capsules. Pool Cell 12 also has a circulation system that continuously circulates the pool cell water; however, instead of using a heat exchanger, heat is removed using the pool cell closed loop cooling system (CLCS) or a backup once-through cooling system using raw water and the existing pool cell heat exchangers.

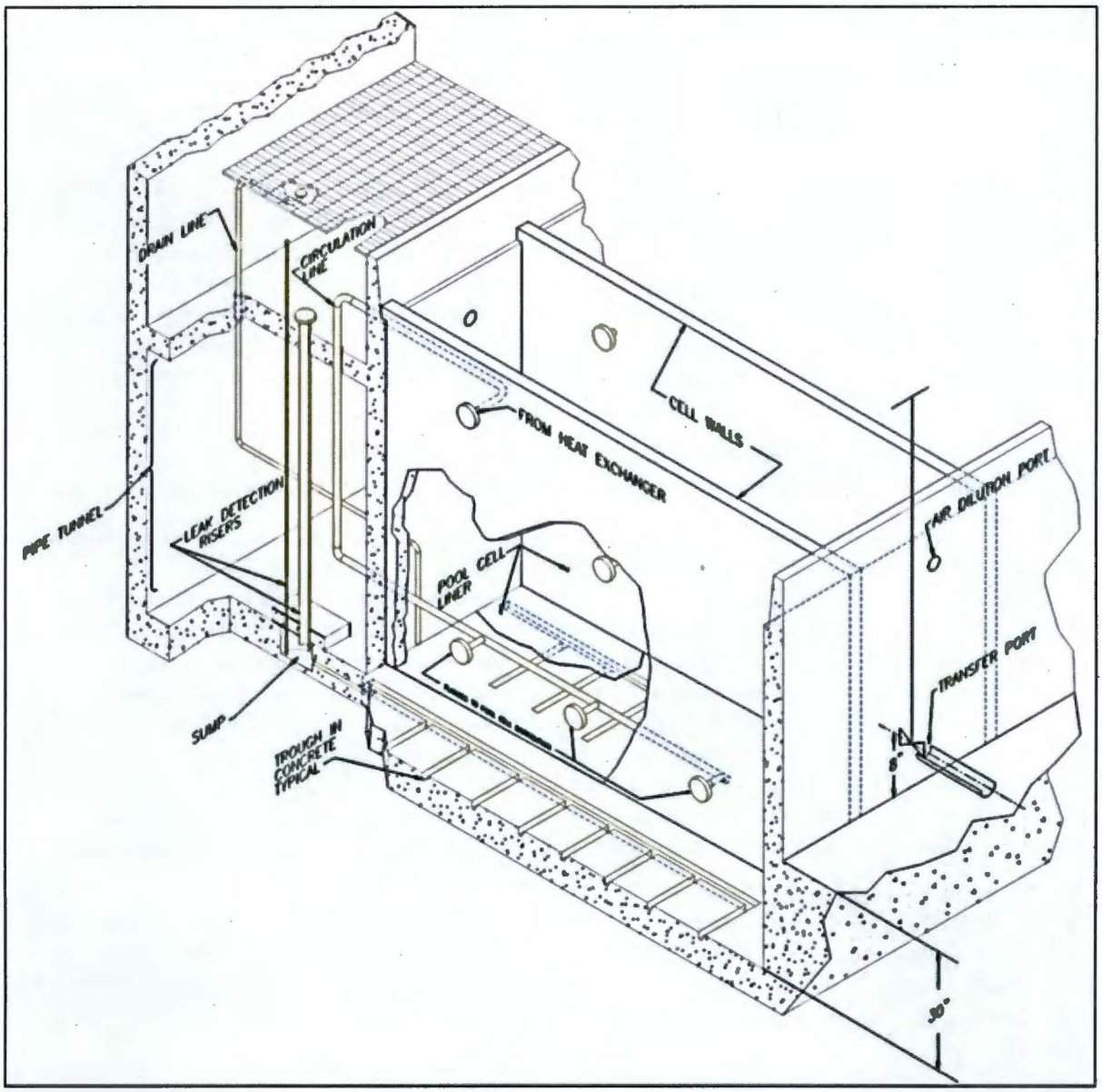

Figure C-7. Pool Cell Circulation and Drain Lines

The CLCS circulates water from the outlet of the wet surface fluid coolers (WSFCs), through pool cell heat exchangers, back to the inlet of the WSFCs using two circulation pumps located in building 225-BG. Only one of the two 480 V, 100 HP circulation pumps is required to be in operation to supply the necessary flow. Three WSFCs are provided to transfer heat removed from the pool cell heat exchangers to the atmosphere.

If the CLCS is unavailable, raw water along with the existing pool cell heat exchangers may be used as an alternate once-through cooling system. The once-through raw water system discharges to the Treated Effluent Disposal Facility.

Pool Cell Water Leak Detection System

Each pool cell has a sloped leak collection system under the stainless steel liner. The individual collection systems for Pool Cells 1 through 11 each drain to a collection sump located in the pipe tunnel (Figure C-7). The system for Pool Cell 12 contains two collection sumps: one is located to the east, while the other is located to the southwest of the pool cell.

The collection system in Pool Cell 1 consists of 10 troughs, which feed to the central trough from each side. An approximate 2.5 cm (1.0 in.) drain line at the west end of Pool Cell 1 runs under the pipe tunnel floor to the collection sump, which is approximately 51 cm (20 in.) in diameter and 30 cm (12 in.) deep. The collection sump is constructed of stainless steel covered with approximately 15 cm (6.0 in.) of reinforced concrete. An approximate 2.5 cm (1.0 in.) line extends from the collection sump to the west underneath the grating and is used to remove water from the collection sump. An approximate 15 cm (6.0 in.) line travels from the collection sump to the pump trench, which houses a conductivity probe that is used to detect water collected in the sump.

Pool Cells 2 through 11 each have a main collection trough near the north side with 10 feeder troughs, as well as a collection sump that is the same as the sump for Pool Cell 1 (described in the above paragraph).

As mentioned previously, Pool Cell 12 consists of two collection sumps. The collection sump to the east is near the centerline between Pool Cells 6 and 7. A single trough runs through Pool Cell 12, approximately 30 cm (12 in.) from the west wall. This sump collects water from the northern third and middle third of the pool cell, which drain toward each other where the drain line to the collection sump is located. The approximate 2.5 cm (1.0 in.) line for transferring water from the sump lies in the wall between Pool Cells 6 and 7 and ends below the grating to the west of the pool cells. The second collection sump for Pool Cell 12 is located to the south of Pool Cell 1 and to the west of the cask pit portion of Pool Cell 12. This sump collects water from the southern third of Pool Cell 12 and from a single trough in the cask pit portion of the pool cell. The sumps water transfer line also ends below the grating to the west. Each of the collection sumps for Pool Cell 12 have a conductivity probe that is used to detect water collected in the sump. A portable pump is used to remove water collected in either of these two sumps.

Pool Cell Water Level Monitoring System

The pool cells are equipped with differential pressure type water level indicators and alarms. Pool cell water levels are displayed in the pool cell monitoring area adjacent to and accessible from the operating gallery (see Figure C-1). Water levels can also be determined using pool cell weight factor indicators, a manual level indicator, or visual comparison with equipment that has a known documented level in the pool cell.

Pool Cell 12 has a float style level monitor that can be seen from outside the 225-B Building when the personnel access door on the north wall is open. In the event of an emergency that prevents access to the 225-B Building, this monitor would be used for determining the water level.

Deionized Water System

The deionized water system, consisting of two banks of portable columns, is located on the second floor of the Aqueous Makeup Unit (AMU) Area (Figure C-2). Sanitary water enters the in-service bank, flowing through a depth filter and mixed resin bed(s) prior to exiting the system. Water that leaves the system is monitored for chemical purity. One bank of deionizers is normally in-service at a time; however, both banks can be used concurrently if deemed necessary.

Typically, deionized water is stored in an approximately 3,800 L (1,000 gal) storage tank (Tk-210) in the AMU Area. However, deionized water may also be valved to flow directly from the deionizers to the desired area (i.e., pool cells).

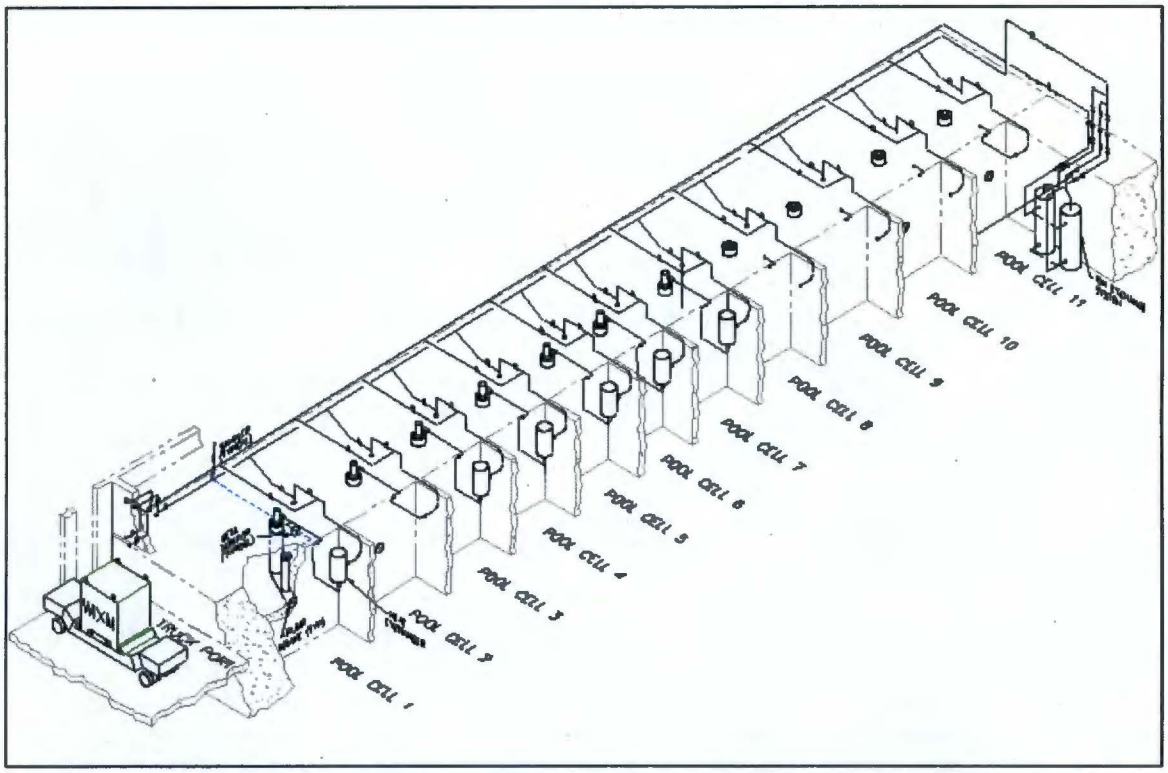

Figure C-8. Isometric Drawing of Pool Cell Systems

Pool Cell Beta Monitoring System

Beta monitors are located in pool cells that store or could potentially store capsules (i.e., Pool Cells 1, 3 through 7, and 12). Each detector monitors a sample line from the circulation pump and passes it into a sample chamber composed of a cerium crystal and photomultiplier tube. The monitor is designed to detect gross beta and gamma radiation in the pool cell water, providing early indication of a capsule leak. Since the dangerous and radioactive components of mixed waste are inseparable, there cannot be a release of dangerous waste or dangerous waste constituents that does not exhibit radioactivity.

Pool Cell Normal Ion-Exchange System

Water from Pool Cells 1, 3 through 7, and 12 is periodically diverted to a deionizing system located in Pool Cell 11. The pool cell water is filtered prior to entering the ion exchange (IX) column(s) containing technical grade mixed-bed IX resin. Impurities in the pool cell water, such as chloride ions, corrosion products, dissolved salts, and solid debris, are removed by the deionizing system. A simplified schematic of the IX system is shown in Figure C-8.

Pool Cell Emergency Ion Exchange System

The emergency IX system provides a method to decontaminate water in the pool cells in the event of a capsule leak. Water from the affected pool cell would be circulated through a WESF ion exchange module (WIXM) located in the truckport. WIXMs are portable, shielded, disposable IX resin units designed to remove radioactive cesium and/or strontium from the water of the affected pool cell. WIXMs consist of a stainless steel IX column and support piping encased in a reinforced concrete shielding block measuring approximately 2.2 m (7.2 ft) long, by 2.2 m (7.2 ft) wide, by 2.7 m (8.8 ft) tall. Once the contaminated water is circulated through the WIXM, the purified water is then returned to the pool cell.

Pool Cell Cleaning System

The pool cell cleaning system uses a sand filter to remove organic and mineral materials from the water. Two different suction assemblies can be used for cleaning:

1) Fixed length skimmer basket assembly consisting of a skimmer basket connected to the pump suction via piping.

2) Hard-piped dual suction assembly that has a short leg acting as a vacuum break and a longer leg with flexible hosing and cleaning head attachments that allows the bottom of the pool cells to be cleaned.

The cleaning system discharge piping for both assemblies is routed back to the pool cell containing the suctions legs, thus, completing the circulation pathway.

Brushes are used to clean algae from the pool cell walls. The remaining debris is then captured and removed by the pool cell cleaning system.

C1.1.2.3 Equipment and Tools

Several other types of equipment and tools are used in the pool cells for capsule movement, examination, storage, and maintenance activities.

Pool Cells 1 and 3 through 7 each contain one small (13 by 13 grid) and two large (18 by 21 grid) capsule storage racks, which store capsules in an upright position in designated locations. Capsules can be transferred underwater between pool cell capsule storage rack locations or to the capsule transfer cart using pool cell tongs. The tongs are also used to perform certain tests and retrieve items that were unintentionally dropped into the pool cells (e.g., pens, badges, and dosimeters).

An underwater camera system, as well as underwater lighting, may be used for viewing the capsules or pool cell structures.

A motorized catwalk, approximately 1.2 m (4.0 ft) wide by 7.6 m (25 ft) long, is located over the pools. The catwalk can travel the full length of the pool cell area, providing access to each of the pool cells for capsule examination, movement, and maintenance activities. There is protective railing on each side of the length of the catwalk for personnel safety. The railing also contains supports for the camera and pool cell tools used during capsule examination and movement activities.

The pool cells have a maintenance platform that is used to perform maintenance on the pool cell heat exchanger(s) and other pool cell systems. The platform is designed so that it cannot fit into a pool cell regardless of the orientation.

C1.1.2.4 Pool Cell Area Ventilation System

The K4 heating, ventilation, and air conditioning (HVAC) system supplies 100 percent outside air to the pool cell area. Outside air is filtered and heated or cooled, as necessary, prior to entering the centrifugal fan which distributes the air to the pool cell area.

The pool cell area is exhausted from the K1 exhaust system, which sequentially passes through one stage of pre-filters, one stage of bag filters, and two stages of HEPA filters. One of two redundant fans exhausts the air from the filter banks through the monitored 296B-10 stack. The K1 exhaust ventilation system prevents hydrogen accumulation by removing radiolytic hydrogen from the pool cell area.

A process flow diagram of the K4 supply and K1 exhaust ventilation systems is shown in Figure C-9.

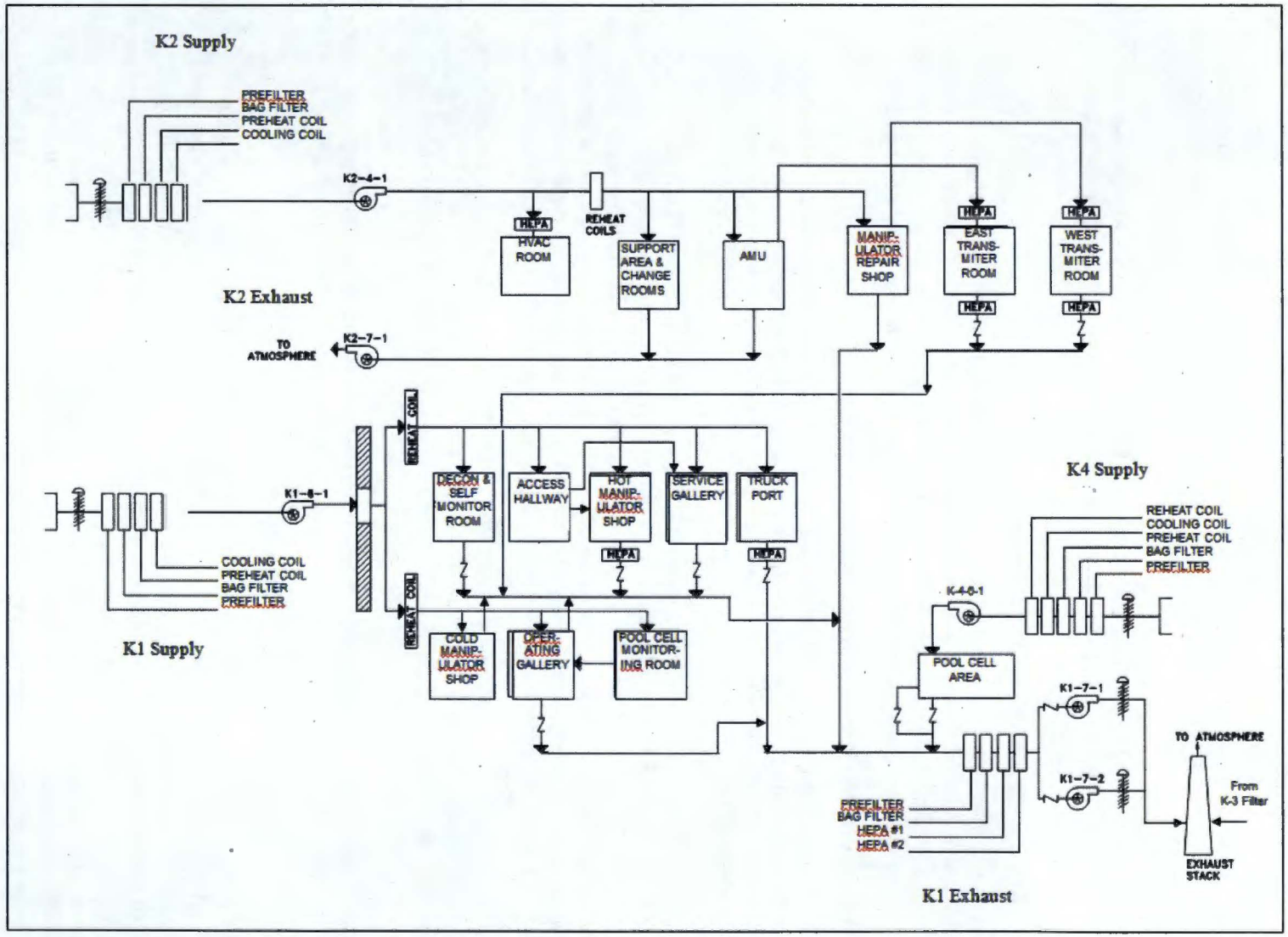

Figure C-9. K1, K2, and K4 Ventilation Systems

C1.2 List of Wastes and Maximum Waste Inventories

Two waste streams are managed at WESF consisting of the cesium chloride and strontium fluoride salts, which are stored within double-walled capsules (further described in Section C2.1). WESF currently stores 1,936 stainless steel capsules containing radioactive cesium chloride and strontium fluoride salts. WESF does not generate products, have any production processes, nor receive waste from another onsite and/or offsite facility.

For a comprehensive list of waste managed in accordance with *Resource Conservation and Recovery Act of 1976* (RCRA) regulations, including classification and estimated annual quantities, refer to the WESF Part A Form located in Addendum A.

C1.2.1 Hot Cell G DWMU Maximum Waste Inventory

Hot Cell G primarily functions to support contingency operations in the event of a capsule failure via the preferred method of shielded storage (G-7). The shielded storage device can hold a maximum of nine capsules, each containing approximately 1 L (0.264 gal) of cesium chloride or strontium fluoride waste; therefore, the maximum waste inventory of the Hot Cell G DWMU is approximately 9 L (2.38 gal).

C1.2.2 Pool Cells DWMU Maximum Waste Inventory

Pool Cells 1 through 8 and 12 comprise the Pool Cells DWMU. Capsules are stored in capsule storage racks located in Pool Cells 1, 3, 4, 5, 6, and 7. Each of these pool cells contains three capsule storage racks, for a total of 715 capsule storage locations, per pool cell; therefore, the 6 pool cells collectively can hold up to 4,290 capsules.

Even though Pool Cell 12 is normally used for transferring capsules from Hot Cell G to one of the six pool cells (or vice versa), Pool Cell 12 can also be used for temporary capsule storage. The storage capacity of Pool Cell 12 has been calculated by dividing the area of the pool cell floor (approximately 177,450 cm^2 [27,650 $in.^2$]) by the area required to store each capsule horizontally, in a single layer (not stacked) on the pool cell floor (approximately 610 cm^2 [96 $in.^2$]), since there are no capsule storage racks located in Pool Cell 12. Based on these calculations, the storage capacity of Pool Cell 12 is 288 capsules.

Although Pool Cells 2 and 8 are within the Pool Cells DWMU boundary, both of these pool cells are not used for capsule storage. Therefore, combining the storage capacity of Pool Cells 1, 3, 4, 5, 6, and 7 (4,290 capsules) with the storage capacity of Pool Cell 12 (288 capsules) equals the total maximum storage capacity of 4,578 capsules for the Pool Cells DWMU.

Since each capsule contains approximately 1 L (0.264 gal) of cesium chloride or strontium fluoride waste, the maximum waste inventory of the Pool Cells DWMU is approximately 4,578 L (1,209 gal).

C2 Process Information

The WESF mission is to provide continued safe storage of the cesium and strontium mixed waste capsules, including necessary maintenance, examination, decontamination, movement, storage, and surveillance of the capsules. Due to the radioactive component of the mixed waste contents, capsule management practices differ from the standard container management requirements specified in WAC 173-303-630. However, all deviations to the standard requirements are essential for worker protection, as well as maintaining capsule integrity, and are protective of human health and the environment. Capsules are handled, managed, and stored in a manner that reduces the likelihood of potential release of the mixed waste contents as described in the following sections.

C2.1 Description of Capsules

WESF currently stores 1,936 capsules: 1,335 of these capsules contain cesium chloride salt, while the remaining 601 capsules contain strontium fluoride salt. There are three types of cesium and strontium capsules: mixed waste capsules of cesium salts, Type W overpacks of mixed waste capsules, and mixed waste capsules of strontium salts. Table C-1 contains design specifications of the capsules in storage at WESF.

Table C-1. Capsule Properties

Capsule Type	Containment Boundary	Material	Wall Thickness[a] (cm [in.])	Outside Diameter (cm [in.])	Total Length (cm [in.])	Cap Thickness (cm [in.])
CsCl Capsule	Inner	316L Stainless Steel	0.241, 0.262, or 0.345 (0.095, 0.103, or 0.136)	5.72 (2.25)	50.102 (19.725)	1 (0.4)
	Outer	316L Stainless Steel	0.277, 0.302, or 0.345 (0.109, 0.119, or 0.136)	6.668 (2.625)	52.769 (20.775)	1 (0.4)
SrF_2 Capsule	Inner	Hastelloy® C-276	0.305 or 0.345 (0.120 or 0.136)	5.715 (2.225)	51.054 (19.05)	1 (0.4)
	Outer	316L Stainless Steel[b]	0.277, 0.302, or 0.345 (0.109, 0.119, or 0.136)	6.668 (2.625)	51.05 (20.10)	1 (0.4)
Type W Overpack	Single	316L Stainless Steel	0.318 (0.125)	8.26 (3.25)	55.436 (21.825)	1 (0.4)

Note: Capsule data are taken from HNF-22687, *WESF Capsule Data Book*.

a. The specified wall thickness of the capsules was changed during production.

b. Some of the initial SrF_2 capsules were made with Hastelloy® C-276 outer capsules.

CsCl = cesium chloride SrF_2 = strontium fluoride

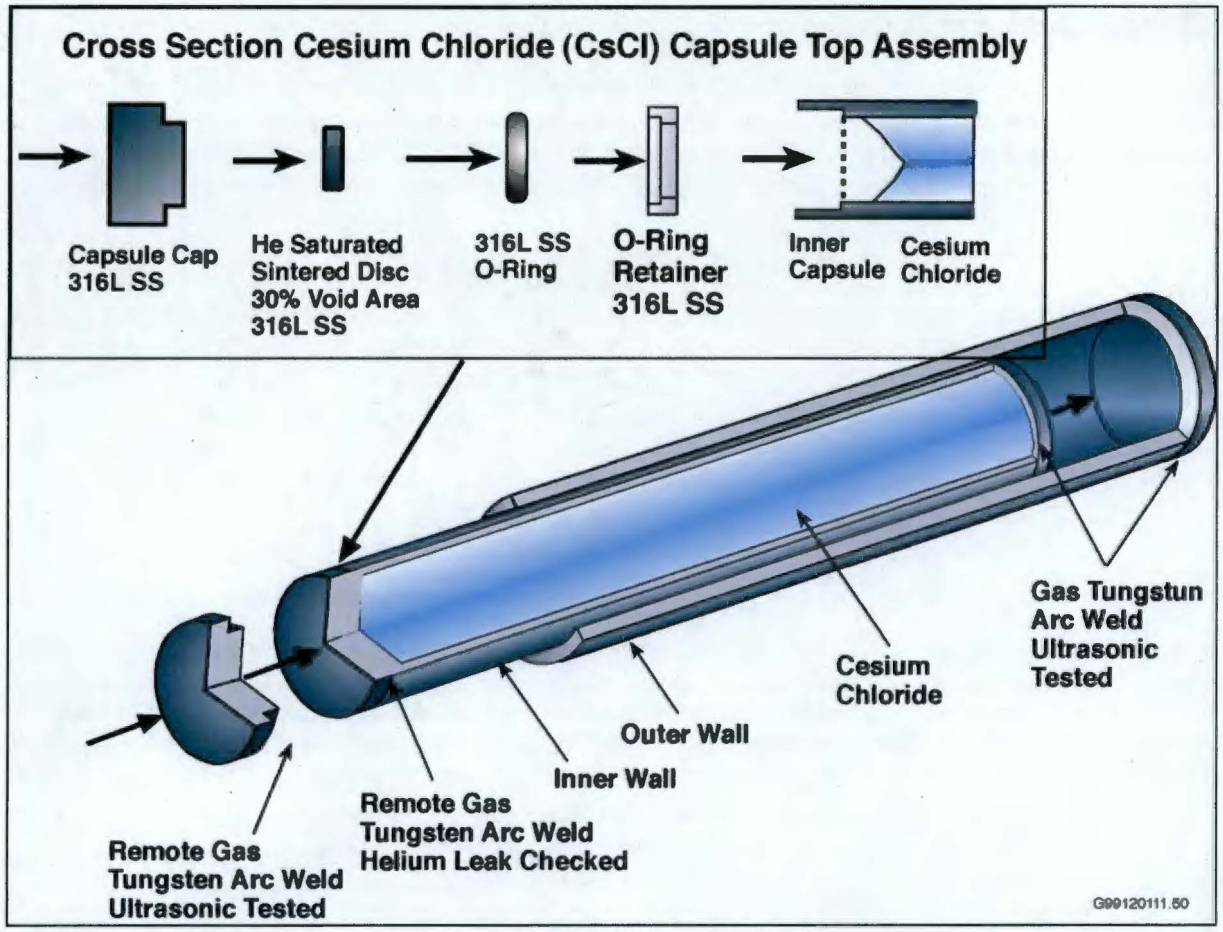

Figure C-10. Cesium Capsule

The cesium capsules are double walled (i.e., a capsule placed inside another capsule), stainless steel containers with a length of approximately 52.769 cm (20.775 in.) and a diameter of approximately 6.668 cm (2.625 in.) (Figure C-10). Strontium capsules have the same general dimensions but consist of a Hastelloy® inner capsule and a stainless steel outer capsule (Figure C-11).

Of the cesium capsules, 23 are referred to as Type W overpacks (Figure C-12). Type W overpacks were fabricated and overpacked at the 324 Building from 1997 to 1999. Of these overpacks, 16 contain degraded cesium capsules, while the other 7 contain containers of cesium chloride that were packaged during cleanout of the 324 Building. Type W overpacks are made of stainless steel and have a length of approximately 55.436 cm (21.825 in.) and a diameter of approximately 8.26 cm (3.25 in.).

WESF encapsulation operations took place between September 1974 and January 1985. First, the cesium chloride or strontium fluoride salt was added to the inner capsule, followed by a sintered metal disk to aid the helium leak check performance test. The capsule was then purged with helium, capped, welded, leak checked to verify integrity of the inner capsule weld, and decontaminated before it was inserted into a stainless steel outer capsule. The outer capsule cap was welded in place, and the weld was examined ultrasonically. Finally, a calorimetry test was performed prior to placing the capsule in storage.

xvixvi

® Hastelloy is a registered trademark of Haynes International, Kokomo, Indiana.

The Type W overpacks had both a helium leak check and ultrasonic weld inspection on the outer capsule to verify weld integrity.

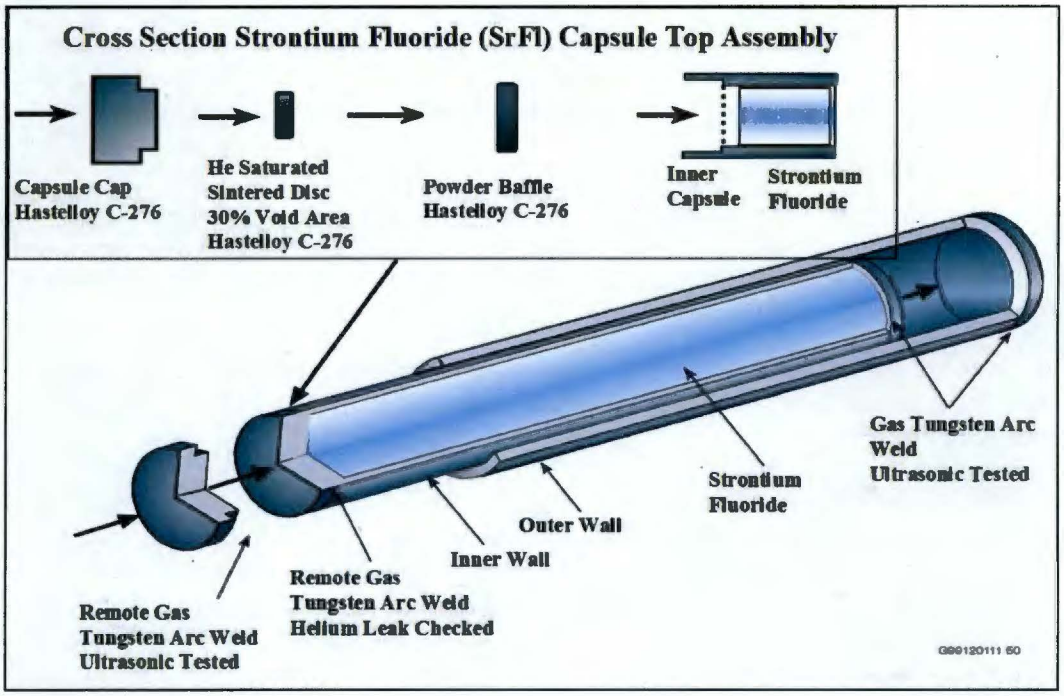

Figure C-11. Strontium Capsule

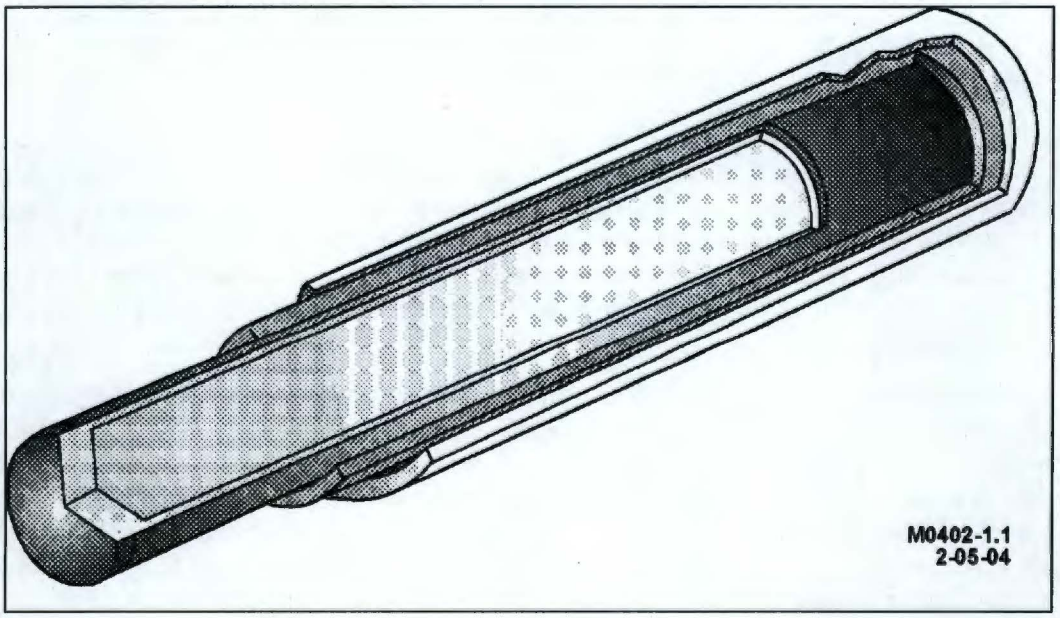

Figure C-12. Type W Overpack (Typical)

All capsules are designed to fit through the transfer chute between Hot Cell G and Pool Cell 12, through the pool cell transfer ports, as well as in the pool cell storage racks. All capsules are marked with a unique identification number and are designed for long-term storage in water.

C2.1.1 Condition

Capsules will be sealed (i.e., welded) at all times. If a capsule is found to have an apparent structural defect, or suspected or determined to have lost its structural integrity, the capsule will immediately be transferred to Hot Cell G to undergo further examination and testing. If it is determined that the capsule is in fact compromised (i.e., leaking), then the capsule will preferably be stored in shielded storage until a full recovery plan is established (e.g., encapsulating in a Type W overpack) as described in Section C2.2.

C2.1.2 Identification and Labeling

Due to the unique characteristics of the capsules and underwater storage configuration, the WESF capsules are not labeled with traditional dangerous waste or major risk labels. However, each capsule has been scribed with a unique identifier for tracking purposes. Capsule contents and corresponding storage locations are documented and maintained in the WESF operating record.

Signs are posted at personnel entrances to the areas storing mixed waste, identifying any potential hazards in the area. These danger signs satisfy applicable requirements of WAC 173-303-320, "General Inspection," and WAC 173-303-630.

C2.1.3 Waste Compatibility

All capsules are constructed of materials that are compatible with the mixed waste being stored, and are designed for long-term storage in water. Capsule materials preclude chemical, electrochemical, or other reactions (e.g., internal corrosion) from occurring. WESF capsules do not exhibit the characteristics of ignitability or reactivity as defined in WAC 173-303-040 as well as WAC 173-303-090(5) and (7), "Dangerous Waste Characteristics."

C2.2 Capsule Management Practices

Capsule storage, maintenance, and management operations are designed to maintain the structural integrity of the double-walled capsules and provide shielding from the radioactive component of the mixed waste contents.

Pool Cells 1 and 3 through 7 are the primary pool cells used to store all of the cesium and strontium capsules. Each of these pools is filled with approximately 4 m (13 ft) of deionized water and contains three capsule storage racks which store capsules in an upright position in designated locations. Each position within the capsule storage racks in the various pool cells has been assigned a unique identifier to readily track the exact location of each individual capsule. Furthermore, all capsule end caps have been scribed with a unique identifier for tracking purposes. Capsule locations are documented and maintained in the WESF operating record.

Pool cells that store capsules are equipped with water level monitoring systems as described in Section C1.1.2.2. Periodically deionized water from the WESF deionized water system (see Section C1.1.2.2) is added to the pool cells to maintain water levels due to water loss attributed to evaporation. In the event of an emergency (e.g., high radiation levels in the pool cell area), water may be remotely added to Pool Cell 12 via the fill pipe located on the outside of the north wall of the pool cell area. Since the pool cell transfer ports are normally kept in an open position, water will flow from Pool Cell 12 into the active pool cells. However, if the transfer ports are closed, water will overflow through the air dilution ports (Figure C-7) between Pool Cell 12 and the other pool cells.

Capsules may be moved between pool cells or transferred to Hot Cell G for further examination, testing, and/or storage. Pool cell tongs are used to obtain the designated capsule from its storage location (i.e., rack position within the specified pool cell). The capsule is then transported underwater to Pool Cell 12

via the pool cell transfer port. From here, the capsule may be temporarily stored on the pool cell floor, relocated to a different pool cell (via pool cell transfer port) for storage, or transferred to Hot Cell G via the capsule transfer cart.

Hot Cell G DWMU provides the capability to inspect, maintain, and store capsules, as needed, as well as retain the capability for future removal of the cesium and strontium capsules from WESF. All capsule handling operations are performed remotely using mechanical manipulators described in Section **Error! Reference source not found.**.

If a capsule is suspected of leaking, it will be transferred to Hot Cell G where further examination and performance testing will take place. Nonconforming or failed capsules may be overpacked and/or placed in dry storage within Hot Cell G. G-7 shielded storage is preferable for long-term storage of a nonconforming or failed capsule since it provides radiation shielding and, therefore, allows for personnel entry into the hot cell even when suspect or failed capsules are present (refer to Section **Error! Reference source not found.** for further details on G-7 shielded storage). A capsule may also be placed in a rack or on the inspection table inside of Hot Cell G; however, personnel access into the hot cell would be restricted while suspect or failed capsules are present in these locations.

If at any point a capsule is noted as having an identification number that is not clearly visible, the outer capsule will be polished with a capsule scrubber or buffer tool and rescribed with the appropriate identification number in Hot Cell G. Hot Cell G will also continue to provide a location for welding and testing should installation of Type W overpacks onto capsules be required.

C2.2.1 Capsule Handling

Due to the lethal nature of the radioactive component of the mixed waste contents, all capsules are handled remotely using pool cell tongs or mechanical manipulators as mentioned in Section C2.2. The double-walled capsules have been sealed (i.e., welded) and serve as the primary containment of the encapsulated cesium chloride and strontium fluoride mixed waste. Under no circumstances shall the capsules be opened. Capsules will be kept sealed at all times, with their end caps welded in place.

Capsule handling activities are performed by trained and qualified personnel whom meet the requirements specified in WESF Addendum G, "Personnel Training," as denoted in Section C4.

C2.2.2 Aisle Spacing

Cesium and strontium capsules are normally stored underwater in designated pool cells or temporarily stored in Hot Cell G when deemed necessary; therefore, aisle spacing requirements outlined in WAC 173-303-630(5)(c) are not applicable to the capsule storage configuration at WESF. However, the mixed waste capsules are stored in a manner that allows for unobstructed movement of personnel and emergency equipment to any area of the operating facility in the event of an emergency.

C2.2.3 Inspections

Inspections of active storage areas are conducted by qualified personnel trained in accordance with WESF Addendum G to detect any signs of malfunction, deterioration, discharges, or other anomalies that could potentially harm human health or the environment. The content and frequency of inspections are specified in WESF Addendum I, "Inspection Plan."

C2.3 Containment Requirements for Storing Capsules

All capsule storage operations are confined within the WESF 255-B Building. The designs of the Pool Cells and Hot Cell G DWMUs are built to keep exposures as low as reasonably achievable. The pool cell

and hot cell areas are built to isolate and maintain confinement of the encapsulated mixed waste during normal storage conditions and in the event of a natural or manmade accident.

WESF does not store any capsules with free liquids, waste that exhibit ignitability or reactivity, or waste designated as F020 through F023, F026, or F027; therefore, in accordance with WAC 173-303-630(7)(c), WESF needs not have a containment system as described in WAC 173-303-630(7).

C2.3.1 Controlling Run-On and Runoff

Since the mixed waste capsules are stored underwater in pool cells within the 225-B Building and pool cell water levels are controlled as described in Section C1.1.2.2, run-on is not considered a relevant factor in evaluating the protectiveness of waste storage activities at WESF. However, the 225-B Building design and construction do address precipitation control. The WESF roof, walls, and foundation prevent precipitation run-on from entering the pool cell and hot cell areas; therefore, no precipitation can contact the waste. Since no precipitation can enter the building to contact the waste, no run-off can occur.

C2.4 Prevention of Reaction of Ignitable, Reactive, and Incompatible Waste in WESF

The mixed waste contents of the capsules stored at WESF do not exhibit characteristics of ignitability, reactivity, or incompatibility. Additionally, WESF does not and will not store ignitable, reactive, or incompatible waste with the mixed waste capsules. Therefore, WAC 173-303-630(8) and (9) requirements are not applicable to WESF.

C2.5 Air Emissions

This section addresses air emission standards from the following requirements:

- WAC 173-303-690, "Air Emission Standards for Process Vents," incorporated by 40 CFR 264, "Standards for Owners and Operators of Hazardous Waste Treatment, Storage, and Disposal Facilities," Subpart AA, "Air Emission Standards for Process Vents."
- WAC 173-303-691, "Air Emission Standards for Equipment Leaks," incorporated by 40 CFR 264, Subpart BB, "Air Emission Standards for Equipment Leaks."
- WAC 173-303-692, "Air Emission Standards for Tanks, Surface Impoundments, and Containers," incorporated by 40 CFR 264, Subpart CC, "Air Emission Standards for Tanks, Surface Impoundments, and Containers."

C2.5.1 Applicability of Subpart AA Standards

The air emission standards in 40 CFR 264, Subpart AA apply to process vents associated with distillation, fractionation, thin-film evaporation, solvent extraction, or air or steam stripping operations for hazardous wastes with organic concentrations of at least 10 parts per million (ppm) by weight. Since WESF does not have any process vents subject to Subpart AA, these standards do not apply.

C2.5.2 Applicability of Subpart BB Standards

The air emission standards in 40 CFR 264, Subpart BB apply to equipment that contains or comes into contact with waste with a total organic concentration of 10 percent by weight or more. Since WESF does not store dangerous waste with associated organic compounds, Subpart BB standards do not apply (see WESF Addendum A for a comprehensive list of waste managed at the facility).

C2.5.3 Applicability of Subpart CC Standards

Air emission standards of 40 CFR 264, Subpart CC apply to tank, surface impoundment, and container storage units that manage waste with average volatile organic concentrations equal to or exceeding 500 ppm by weight, based on the waste composition at the point of origination. However, containers that solely manage mixed waste are exempt per 40 CFR 264.1080(b)(6), "Applicability."

C3 Analysis of Miscellaneous Unit Regulatory Requirements Pursuant to WAC 173-303-680

WAC 173-303-680 requirements state that "a miscellaneous unit must be located, designed, constructed, operated, maintained, and closed in a manner that will ensure protection of the human health and the environment. Permits for miscellaneous units are to contain such terms and provisions as necessary to protect the human health and the environment…" Waste management process descriptions provided in this addendum describe all essential elements of waste management practices necessary to support the required demonstrations, including requirements of WAC 173-303-680(3).

WAC 173-303-680(2)(a) through (c) requires consideration of the potential release or migration of waste or waste constituents to groundwater, surface water, and air. Since mixed wastes managed at WESF are in sealed capsules with little, if any, potential for release outside of the outer capsule, explicit consideration of these *Washington Administrative Code* sections is not necessary. WESF is not seeking to be permitted as a disposal unit; therefore, the requirements of WAC 173-303-680(4) are not applicable.

C4 Training

For training requirements relative to duties described in this addendum, refer to WESF Addendum G.

This page intentionally left blank.

Addendum E

Security

This page intentionally left blank.

Contents

E1 Security E-1

E2 Security Provisions E-1

E2.1 Access Control E-1

E2.2 Warning Signs E-2

This page intentionally left blank.

E1 Security

This addendum discusses the security requirements relative to the Waste Encapsulation and Storage Facility (WESF) Operating Unit Group and, furthermore, complies with the security requirements set forth in WAC 173-303-310, "Dangerous Waste Regulations," "Security."

WESF is located in the northwestern portion of the 200 East Area of the Hanford Facility, with the main 225-B Building adjoining B Plant on the west end.

WESF operations provide for continued safe storage and maintenance of the 1,936 capsules containing cesium and strontium radioactive mixed waste. The double-encapsulated cesium and strontium salts are stored underwater in various pool cells located in western portion of the 225-B Building. WESF storage operations are designed to protect human health and the environment from the encapsulated mixed waste.

For further details on WESF DWMUs and storage operations, refer to WESF Addendum C, "Process Information."

Please note that the terms "mixed waste" and/or "waste," when used in this document, refer to dangerous waste or hazardous waste, as applicable.

E2 Security Provisions

Since WESF is located within the 200 East Area of the Hanford Facility, additional Hanford Facility security measures are provided as described in WA7890008967, *Hanford Facility Resource Conservation and Recovery Act Permit* (hereinafter called the Hanford Facility RCRA Permit), Attachment 3, "Security." Collectively, these security systems combined with the security measures identified in this addendum prevent unknowing entry and minimize the possibility for unauthorized entry of persons or livestock onto the active dangerous/mixed waste portions of WESF, as required by WAC 173-303-310(1).

E2.1 Access Control

The Hanford Facility maintains surveillance and access controls 24 hours per day, 7 days per week. Three different barricades guarded by armed protective Hanford Patrol forces control vehicular access to the active portions of the Hanford Facility (e.g., WESF) (WAC 173-303-310(2)(c)). Access is limited to authorized individuals displaying appropriate security identification issued only by the U.S. Department of Energy. Continuous surveillance of WESF as well as the entire Hanford Facility is further provided by roving, motorized patrols conducted by Hanford Patrol personnel. The constant presence of protective force personnel provides access controls to active portions of the Hanford Facility, including WESF, thus meeting the requirements of WAC 173-303-310(2)(b).

The Columbia River provides a natural barrier for the northern and eastern portions of the Hanford Facility boundary, while perimeter fencing provides an artificial barrier for the western and southern portions of the Hanford Facility boundary (WAC 173-303-310(2)(c)).

All WESF dangerous/mixed waste management activities are performed within the main 225-B Building, which is kept locked at all times (WAC 173-303-310(2)(c)). Keys to access doors are controlled and accessible only by authorized personnel. All personnel are required to check in with the Shift Operations Manager in the Operating Base prior to beginning any assigned work tasks or scheduled tours of the facility. Visitors must adhere to all personal protection requirements and are subject to escorting protocols.

Personnel training requirements for those individuals whose assigned work tasks directly relate to WESF dangerous/mixed waste management activities are established in WESF Addendum G, "Personnel Training."

E2.2 Warning Signs

Entrances to portions of WESF used to store and manage the mixed waste capsules are posted with danger signs reading, "DANGER WASTE STORAGE - MAJOR CHEMICAL RISK: TOXIC."

Furthermore, danger signs are posted at area boundaries within the Hanford Facility stating, "No Trespassing. Security Badges Required Beyond This Point. Authorized Vehicles Only. Public Access Prohibited." Hanford Facility barricades and perimeter fences are posted with restrictive signage as well.

All posted signage is written in English, visible from all angles of approach, legible from a distance of at least 7.6 m (25 ft), and meets the requirements set forth in WAC 173-303-310(2)(a).

Addendum F

Preparedness and Prevention

This page intentionally left blank.

Contents

F1 Preparedness and Prevention F-1

F2 Preparedness and Prevention Requirements F-1

F2.1 Equipment Requirements F-1

F2.1.1 Communication Systems F-1

F2.1.2 Emergency Equipment F-2

F2.1.3 Water for Fire Control F-3

F3 Preventive Procedures, Structures, and Equipment F-3

F3.1 Unloading Operations and Aisle Spacing Requirements F-3

F3.2 Prevention of Run-On, Run-Off, and Contamination to Water Supplies F-4

F3.3 Equipment and Power Failure F-4

F3.4 Personal Protection Equipment F-4

F4 Prevention of Reaction of Ignitable, Reactive, and Incompatible Waste F-4

F5 Arrangements with Local Authorities F-4

This page intentionally left blank.

F1 Preparedness and Prevention

This addendum addresses the preparedness and prevention measures in effect at the Waste Encapsulation and Storage Facility (WESF) Operating Unit Group and, furthermore, complies with the requirements set forth in WAC 173-303-340, "Dangerous Waste Regulations," "Preparedness and Prevention," WAC 173-303-806(4)(a)(viii), "Final Facility Permits;" and WAC 173-303-395(4), "Other General Requirements."

WESF is located in the northwestern portion of the 200 East Area of the Hanford Facility, with the main 225-B Building adjoining B Plant on the west end. The 225-B Building houses the WESF dangerous waste management units (DWMUs), two of which are operating: Hot Cell G and Pool Cells.

WESF operations provide for continued safe storage and maintenance of the 1,936 capsules containing cesium and strontium radioactive mixed waste. The double-encapsulated cesium and strontium salts are stored underwater in various pool cells located in western portion of the 225-B Building. WESF storage operations are designed to protect human health and the environment (HHE) from the encapsulated mixed waste.

For further details on WESF DWMUs and storage operations, refer to WESF Addendum C, "Process Information."

Please note that the terms "mixed waste" and/or "waste", when used in this document, refer to dangerous waste or hazardous waste, as applicable.

F2 Preparedness and Prevention Requirements

WESF is designed, constructed, maintained, and operated to minimize the possibility of fire, explosion, or any other unplanned natural phenomenon or manmade incident that could cause unintentional release of dangerous waste or dangerous waste constituents to the air, soil, surface water, or groundwater which could threaten HHE. The following subsections describe preparedness and prevention measures to be taken at WESF, which help avoid or mitigate such situations.

F2.1 Equipment Requirements

The following communications equipment, fire suppression systems and equipment are available for use at WESF, in accordance with the requirements of WAC 173-303-340(1). All communications, alarm/notification, and fire protection equipment and detection systems are tested and maintained to assure proper operation in time of emergency (WAC 173-303-340(1)(d)).

F2.1.1 Communication Systems

F2.1.1.1 Internal Communication

WESF is equipped with internal communications devices used to provide immediate emergency instruction to onsite personnel. Communications devices described in this section meet the internal communications requirements of WAC 173-303-340(1)(a), (1)(b), and (2)(a).

Onsite internal communication systems consist of alarms and notification systems, telephones, hand-held two-way radios, and a public address system interfaced for voice paging throughout the facility (WAC 173-303-340(1)(a)).

The following audible alarm systems are available to provide warnings to WESF personnel:

- A fire detection system with audible alarms is located throughout the 225-B Building providing personnel notification to evacuate. For further details on fire detection systems refer to Section F2.1.2.1.
- Manual fire alarm pull boxes are located throughout WESF. Activation of manual fire alarm pull boxes triggers an audible fire alarm.
- Manually actuated take cover alarms are located in the Operations Base (225-B Building) as well as the Incident Command Post (MO232). Such alarms provide personnel notification to take cover and are audible throughout WESF.
- Manually actuated evacuate alarms are located in the Operations Base (225-B Building) as well as the Incident Command Post (MO232). Such alarms provide personnel notification to evacuate and are audible throughout WESF.

Whenever mixed waste (capsule) handling operations occur at WESF, all personnel involved must have immediate access to an emergency communication device (e.g., a hand-held two-way radio and/or telephone), either directly or through visual (e.g., hand signals) or voice contact with another employee, capable of directing emergency communications with another employee (WAC 173-303-340(2)(a)).

F2.1.1.2 External Communications

As required by WAC 173-303-340(1)(b), the communications equipment described in Section F2.1.1 must have the capability for contacting the Hanford Patrol Operations Center and Hanford Fire Department to request the assistance of local emergency response organizations.

When activated, the fire detection system and manual fire alarm pull boxes will automatically transmit a fire alarm signal to the 200 Area central fire station.

In the instance that just one employee is at WESF during operations, the individual must have immediate access to a hand-held two-way radio capable of summoning external emergency assistance (WAC 173-303-340(2)(b)).

The Hanford Patrol Operations Center Point of Contact can be contacted for 24-hour emergency communications and for information relays by landline telephone or two-way radio.

State and local response organizations are contacted through the Hanford Patrol Operations Center by dialing emergency number 911 from site telephones, or 509-373-0911 from cellular phones; or for non-emergencies, by dialing the main contact number for the Hanford Patrol Operations Center at 509-373-3800. Onsite responders are notified and/or dispatched through the Hanford Patrol Operations Center.

F2.1.2 Emergency Equipment

Portable fire extinguishers and fire control equipment are available for use throughout WESF (WAC 173-303-340(1)(c)). For a list of emergency equipment, refer to WESF Addendum J, "Contingency Plan." WESF operations personnel are trained in the use of such emergency equipment. For details on personnel emergency training requirements, refer to WESF Addendum G, "Personnel Training."

F2.1.2.1 Fire Detection Systems

Two kinds of fire detectors are used either alone or in combination in the 225-B Building: ionization type elements responsive to products of combustion, and fixed temperature, rate compensated elements. Electrical signals from the fire detectors are transmitted to a central fire alarm panel located in the main entrance corridor. The central panel will initiate an audible alarm system throughout the buildings. The alarm system can also be activated by flow alarm switches installed in the sprinkler system piping. The fire alarm signals are transmitted to the 200 Area central fire station. The fire detection and alarm system is capable of electronically monitoring its own operation and providing trouble signals for loss of electrical power, open circuits, or other problems that could affect the operation of the system. The system provides battery power for approximately 60 hours of operation upon loss of electrical power.

F2.1.2.2 Fire Suppression Systems

The 225-B Building support area, heating, ventilation, and air conditioning room, operating gallery, service gallery, manipulator repair shop, hot and cold manipulator shops, truckport, and Aqueous Makeup Unit area are protected with a wet pipe automatic sprinkler system that alarms when activated through the fire alarm panel to the Hanford Fire Department. Portable fire extinguishers are located throughout the building as well.

F2.1.2.3 Hot Cell Fire Protection Systems

Hot Cell G is equipped with a manually activated water spray fire protection system that can be actuated from the operating gallery. Raw water supplies the fixed and manipulator directed spray nozzles within the hot cell. Hot Cell G also contains a heat detection system that alarms when activated within the building as well as through the fire alarm panel notifying the Hanford Fire Department.

F2.1.3 Water for Fire Control

The raw water system provides water at adequate volume and pressure to supply WESF fire needs (WAC 173-303-340(1)(d)). In the event of loss of raw water pressure to WESF, a diesel driven backup pump can be used to supply raw water to WESF from the deep well supply. An underground fire water line supplies water to the local fire hydrant.

F3 Preventive Procedures, Structures, and Equipment

The following sections describe preventive procedures, structures, and equipment.

F3.1 Unloading Operations and Aisle Spacing Requirements

WESF currently stores 1,936 double-walled capsules containing cesium chloride and strontium fluoride salts. WESF does not produce products, have any production processes, nor receive waste from another onsite and/or offsite facility; therefore, unloading operations are not applicable.

Furthermore, the capsules are stored underwater in a designated pool cell storage rack location. A capsule(s) may be transferred to Hot Cell G for temporary storage as deemed necessary. Aisle spacing requirements in WAC 173-303-630(5)(c), "Use and Management of Containers," are not applicable to WESF storage operations (see WESF Addendum C for further details on WESF storage operations). However, the mixed waste capsules are stored in a manner that allows for unobstructed movement of personnel and emergency equipment to any area of the operating facility in the event of an emergency, therefore meeting the intent of WAC 173-303-340(3).

F3.2 Prevention of Run-On, Run-Off, and Contamination to Water Supplies

Since the mixed waste capsules are stored underwater in pool cells within the 225-B Building and pool cell water levels are controlled as described in WESF Addendum C, run-on is not considered a relevant factor in evaluating the protectiveness of waste storage activities at WESF. However, normal building design and construction practices at WESF address precipitation control. The WESF roof, walls, and foundation prevent precipitation run-on from entering the pool cell and hot cell areas; therefore, no precipitation can contact the waste. Because no precipitation can enter the building to contact the waste, no run-off can occur.

F3.3 Equipment and Power Failure

A temporary loss of electrical power does not constitute an emergency and would not result in a release of mixed waste. The Bonneville Power Administration grid is the primary power source which supplies WESF. Upon loss of power, the WESF standby electrical system diesel driven generator will start, supplying power to the facility until normal power is restored.

WESF will not be occupied during power outages except for personnel providing a response action. Rechargeable battery powered lighting units will provide emergency illumination. Emergency communication equipment will be available to summon emergency assistance in the event of power loss.

F3.4 Personal Protection Equipment

WESF Addendum J does not require any personal protection equipment for management of the capsules.

F4 Prevention of Reaction of Ignitable, Reactive, and Incompatible Waste

WESF does not and will not store ignitable waste, reactive waste, or waste found incompatible with the mixed waste capsules.

F5 Arrangements with Local Authorities

Written emergency assistance agreements exist with local authorities that include arrangements to familiarize and furnish local hospitals, police departments, fire departments, and city and county emergency response teams with Hanford Facility information (WAC 173-303-340(4)(a) through (c)). The response agreements designate primary emergency authority (WAC 173-303-340(4)(d)). If state or local authorities decline to enter into a response agreement or familiarization arrangement with the Hanford Facility, the Permittees will record the refusal in the WESF portion of the Hanford Facility Operating Record as required by WA7890008967, *Hanford Facility Resource Conservation and Recovery Act Permit,* Condition II.I.1.g (WAC 173-303-340(5)).

Addendum G

Personnel Training

This page intentionally left blank.

Contents

G1 Personnel Training.....G-1

Table

G-1. WESF Training Matrix G-2

This page intentionally left blank.

G1 Personnel Training

This addendum describes the personnel training requirements for the Waste Encapsulation and Storage Facility (WESF) Operating Unit Group.

The Permittees will ensure that personnel training meets the requirements of WAC 173-303-330, "Dangerous Waste Regulations," "Personnel Training." Specific requirements for the "Hanford Facility Personnel Training Program" are described in WA7890008967, *Hanford Facility Resource Conservation and Recovery Act Permit* (hereinafter referred to as the Hanford Facility RCRA Permit), Attachment 5.

The Permittees will comply with the training matrix in Table G-1, which provides training requirements for personnel that perform waste management duties at WESF. Refer to the WESF Dangerous Waste Training Plan (DWTP) for a complete description of personnel training requirements. As required by Hanford Facility RCRA Permit Condition II.I.1 (WAC 173-303-380, "Facility Recordkeeping"), which satisfies the training records requirements set forth in WAC 173-303-330(3), a copy of the WESF DWTP will be placed in the Hanford Facility Operating Record (WESF portion) and will be updated by the Permittees as unit-specific conditions change.

Training received by facility personnel will be commensurate with the duties they perform. Individuals are not required to receive training for work duties they do not perform. Continuing training is administered annually, or at 2 year or 3 year retraining frequencies. A course is administered annually if it is administered not less than 30 days after the retraining date set for that course.

Table G-1. WESF Training Matrix

Training Category Course Description[a]	Frequency of Training	Training Type[b]	Job Title/Position									
			Non-WESF Personnel or Visitor	SOM	SOE	SPOC	Waste Service Provider[c]	Maintenance Craft	RCT	NCO	ECO	BED
General Training	Annual	GHFT, CPT	X	X	X	X	X	X	X	X	X	X
Container Management	Annual	GHFT, OT		X			X	X	X	X		
Building Emergency	Annual	ECT										X
ECO Training	Initial	OT									X	
Inspections	Every 2 years	OT								X		
Facility Health and Safety	Annual	GHFT, CPT	X[d]	X	X	X[d]	X	X	X	X	X	X
Waste Designation	Annual	OT					X					
Waste Services	Initial	OT					X					
Waste Shipper	Every 3 years	OT					X					
Waste Management	Initial	GHFT		X				X	X			
SOM	Every 2 years	OT		X								
SOE	Every 2 years	OT			X							

a. See WESF Dangerous Waste Training Plan for a complete description of coursework in each training category.
b. Training types identified in this table (e.g., General Hanford Facility Training and Operations Training) are further discussed in WA7890008967, *Hanford Facility Resource Conservation and Recovery Act Permit* (Attachment 5).
c. Waste service providers include TSDRs, verifiers, shippers, and WMRs. Different waste service providers are only required to take the necessary courses specific to their waste management duties.
d. This training is required only if workers are unescorted in the facility. Personnel that do not have this training will be escorted.

Table G-1. WESF Training Matrix

Training Category Course Description[a]	Frequency of Training	Training Type[b]	Job Title/Position									
			Non-WESF Personnel or Visitor	SOM	SOE	SPOC	Waste Service Provider[c]	Maintenance Craft	RCT	NCO	ECO	BED

BED = Building Emergency Director
CPT = Contingency Plan Training
ECO = Environmental Compliance Officer
ECT = Emergency Coordinator Training
GHFT = General Hanford Facility Training
NCO = Nuclear Chemical Operator
OT = Operations Training
RCT = Radiological Control Technician
SOE = Stationary Operating Engineer
SOM = Shift Operations Manager
SPOC = Single Point of Contact
TSDR = Treatment, Storage, and Disposal Unit Acceptance Representative
WESF = Waste Encapsulation and Storage Facility
WMR = Waste Management Representative

This page intentionally left blank.

Addendum H

Closure Plan

This page intentionally left blank.

Contents

H1 Introduction H-1

H1.1 Hanford Facility Contact Information H-1

H1.2 Hanford Facility Description H-1

H2 WESF Operating Unit Group History, Function, Location, and Layout H-1

H2.3 Historical Operations H-1

H2.4 Current Capsule Storage Operations H-5

H2.5 Products and Production Processes H-8

H2.6 List of Wastes H-8

H2.7 Dangerous Waste Management Units H-8

Figures

Figure H-1. WESF 225-B Building First Floor Plan H-2

Figure H-2. WESF 225-B Building Second Floor Plan H-2

Figure H-3. WESF 225-B Building East/West Sectional View H-3

Figure H-4. WESF 225-B Building North/South Sectional View H-3

Figure H-5. Cesium Capsule H-6

Figure H-6. Strontium Capsule H-7

Figure H-7. Type W Overpack (Typical) H-7

Table

Table H-1. Capsule Properties H-5

This page intentionally left blank.

H1 Introduction

This addendum describes closure activities for the Waste Encapsulation and Storage Facility (WESF) Operating Unit Group (OUG) and, furthermore, complies with the closure requirements outlined in WAC 173-303-610(2) through WAC 173-303-610(6), "Dangerous Waste Regulations," "Closure and Post-Closure."

Please note, the terms "mixed waste" and/or "waste," when seen in this document, refer to dangerous waste or hazardous waste, as applicable.

H1.1 Hanford Facility Contact Information

U.S. Department of Energy, Richland Operations Office
P.O. Box 550
Richland, WA 99352
(509) 372-2400

H1.2 Hanford Facility Description

The Hanford Facility, located in southeastern Washington State, is owned by the U.S. Government and is managed and operated by the U.S. Department of Energy (DOE). Dangerous waste and mixed waste (i.e., waste containing both dangerous and radioactive components) are generated and managed at the Hanford Facility.

H2 WESF Operating Unit Group History, Function, Location, and Layout

The WESF OUG is located in the northwestern portion of the 200 East Area of the Hanford Facility, adjoining B Plant on the west end. Construction of the main, two-story, approximately 1,858 m^2 (20,000 ft^2) building (225-B Building) began in 1971 and was complete by 1973. The building is approximately 47.9 m (157 ft) long by 30 m (97 ft) wide by 12 m (40 ft) high and is constructed of steel reinforced concrete that is partitioned into seven hot cells (A through G), the hot cell service area, operating areas, building service areas, and the pool cell area consisting of Pool Cells 1 through 12 (Figures H-1 through H-4).

H2.3 Historical Operations

The WESF OUG was built to process, encapsulate, store, and maintain radioactive cesium-137 and strontium-90 that had been separated from the plutonium production waste stored in underground storage tanks on the Hanford Facility. Extraction operations took place in the adjacent B Plant Complex, where the radioactive isotopes were then transferred to WESF via the hot pipe trench in the form of liquid cesium carbonate and strontium nitrate.

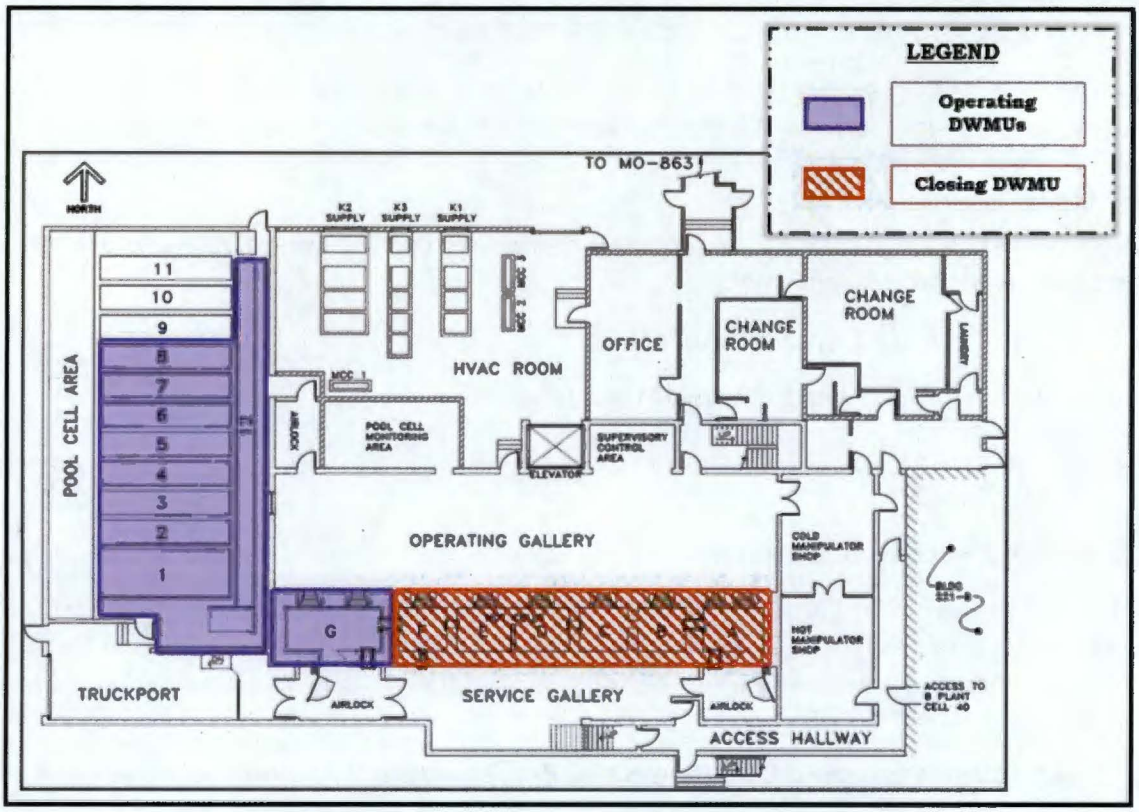

Figure H-1. WESF 225-B Building First Floor Plan

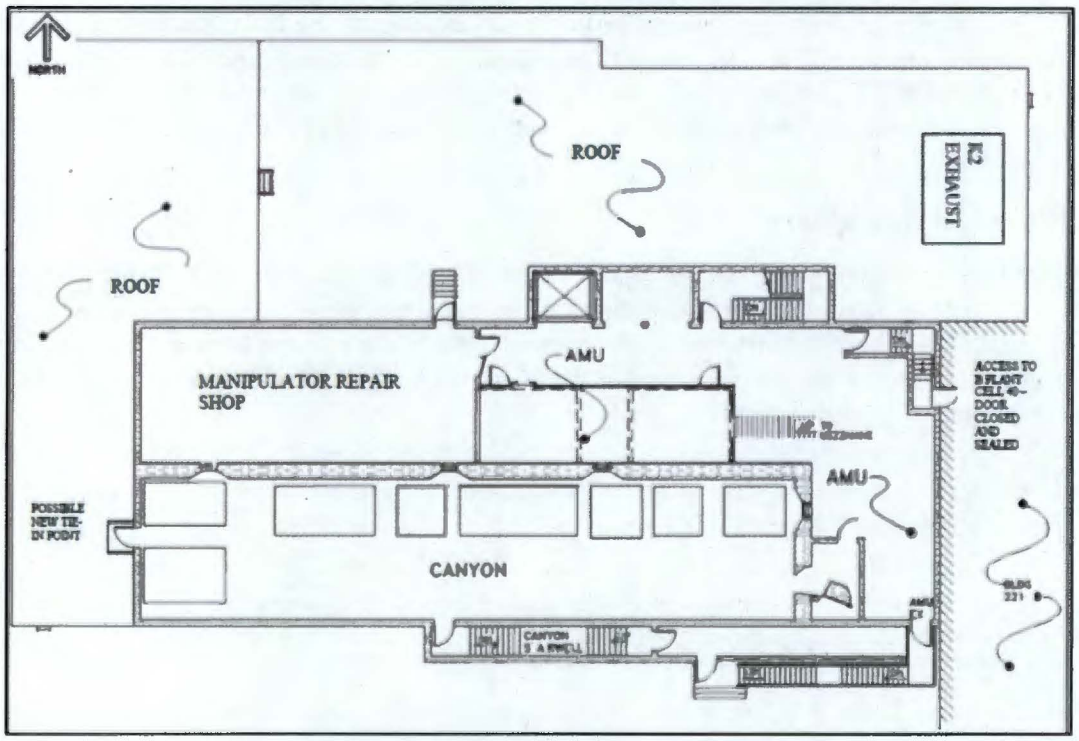

Figure H-2. WESF 225-B Building Second Floor Plan

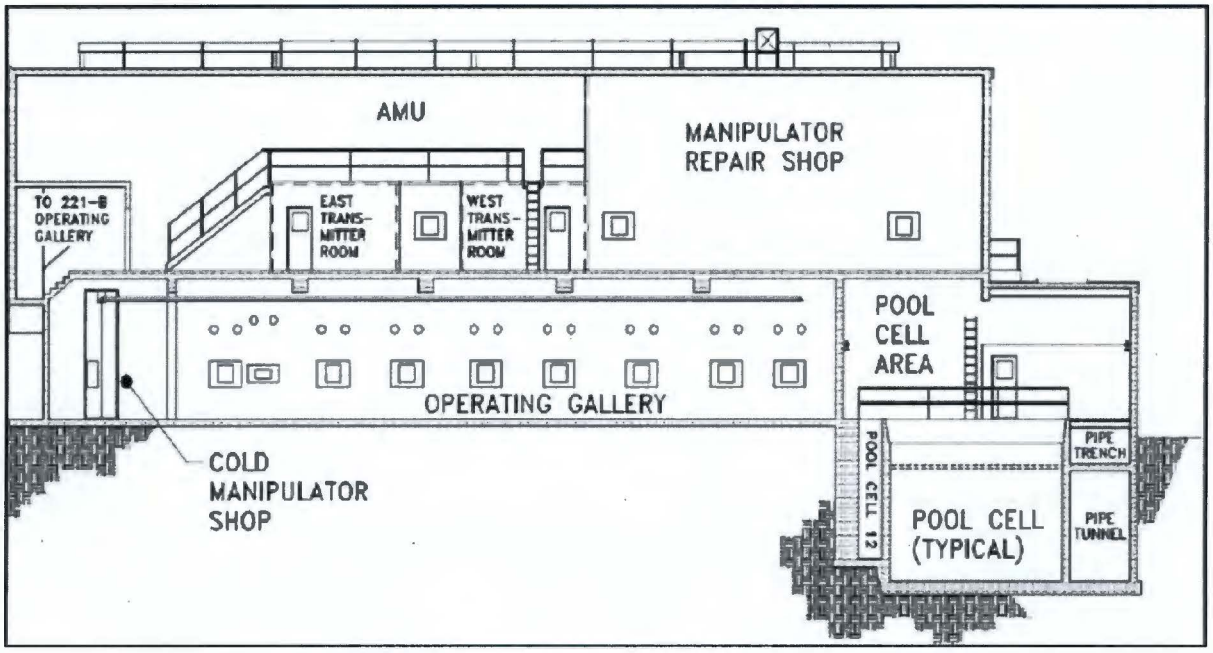

Figure H-3. WESF 225-B Building East/West Sectional View

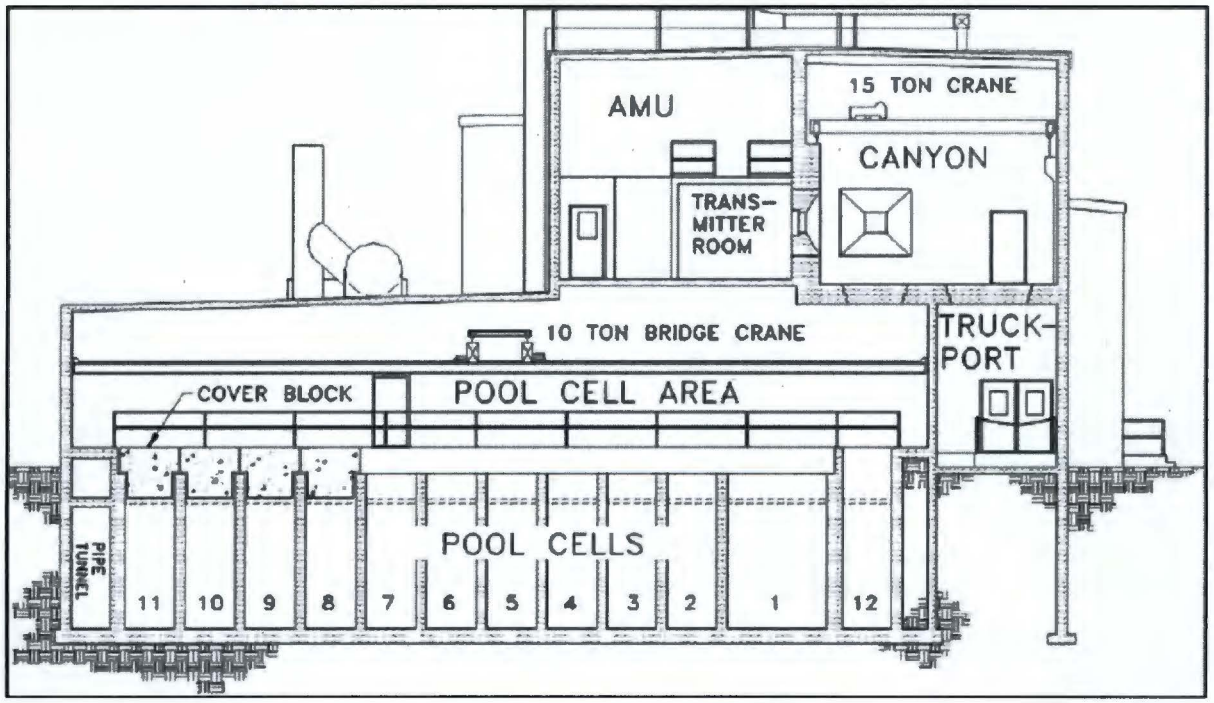

Figure H-4. WESF 225-B Building North/South Sectional View

Encapsulation operations included the following activities:

- Conversion of the cesium carbonate (liquid) to cesium chloride (salt)
- Conversion of the strontium nitrate (liquid) to strontium fluoride (salt)
- Placement of cesium chloride and strontium fluoride salts into double walled stainless steel capsules and seal welding of the capsules
- Performance testing of the capsules to confirm weld integrity and determine the amount of cesium-137 and strontium-90 encapsulated

Encapsulation operations were supported via the hot cells, service gallery, operating gallery, and building service areas. The hot cells provided the necessary equipment to support encapsulation operations while protecting the workers from high levels of radiation and contamination. The service gallery, located on the south side of the hot cells, contained necessary support equipment for the various hot cell processes, including utility and auxiliary process piping. The operating gallery, located on the north side of the hot cells, contained manipulators which were used by process personnel to work remotely in the hot cell. Lead glass windows provided shielding and direct viewing into the hot cells from the operating gallery.

Once encapsulated, the cesium and strontium salts were then transferred from the hot cells to the pool cell area for capsule storage. Capsules were placed in the capsule transfer cart located in Hot Cell G and lowered down through the hot cell floor via the transfer chute into Pool Cell 12, better known as the transfer aisle. Manually operated transfer ports connect Pool Cell 12 with the remaining pool cells, allowing transfer of capsules or water between the various pool cells. Once in Pool Cell 12, the capsule was then manually moved down the transfer aisle using pool cell tongs, through the transfer port into the assigned pool cell where the capsule was placed and stored in a capsule storage rack under approximately 4.0 m (13 ft) of water. During production, one capsule from every fifth batch of cesium processed and one capsule from every tenth batch of strontium processed were stored in Pool Cell 1 for observation. The remaining cesium and strontium capsules were placed in storage racks located in Pool Cells 3 through 6.

By September 1985, processing was complete and WESF had transitioned into a standby and surveillance mode. Selected systems were deactivated, and certain equipment was removed. In this mode of operation, only equipment and instruments required for continued safe storage of the capsules remained operational. This included the operation and maintenance of the pool cells and support systems for Hot Cells F and G. The confinement ventilation system remained operable to provide containment of legacy radioactive contamination and to support surveillance operations.

In 2001, water sources to Hot Cells A through F were isolated, and manipulators were removed from Hot Cells A through E. Water sources and manipulators associated with Hot Cell G remained operational to support future capsule maintenance activities, as necessary.

In 2014, the WESF Stabilization and Ventilation Project was initiated to stabilize legacy contamination in the hot cells and K3 exhaust ventilation duct as well as address inadequacies in the K3 exhaust system by replacing it with a new system. This project was used to meet the DOE Richland Operations Office commitment to the DOE Office of Environmental Management's Safety, Security, and Quality Programs (EM-40) to complete WESF ventilation upgrades by the end of fiscal year (FY) 2016 (13-NSD-0042, "Revised Schedule for Completion of Waste Encapsulation and Storage Facility (WESF) 2004-2 Ventilation Upgrades") and is the first step towards placing the capsules into a dry storage configuration.

By FY 2016, the WESF Stabilization and Ventilation Project was complete. The K3 exhaust ventilation system was replaced with a new system (K3N) and then stabilized via grout. Other areas potentially containing legacy contamination were also stabilized with grout. Such areas included Hot Cell A through Hot Cell F, the Hot Cell A Airlock, the underground K3 exhaust ventilation system ducting, the hot pipe trench and K3 ventilation duct trench underneath the hot cells, and the K3 filters and filter pit.

H2.4 Current Capsule Storage Operations

The current WESF OUG mission is continued safe storage of cesium and strontium capsules, including necessary maintenance, examination, decontamination, movement, storage, and surveillance of the capsules. WESF OUG currently stores 1,936 capsules: 1,335 of these capsules contain cesium chloride salt, while the remaining 601 capsules contain strontium fluoride salt. There are three types of cesium and strontium capsules, as specified in Table H-1. The cesium capsules are double-walled, stainless steel containers with a length of approximately 52.769 cm (20.775 in.) and a diameter of approximately 6.668 cm (2.625 in.) (Figure H-5). Strontium capsules have the same general dimensions but consist of a Hastelloy® inner capsule and a stainless steel outer capsule (Figure H-6).

Table H-1. Capsule Properties

Capsule Type	Containment Boundary	Material	Wall Thickness[a] (cm [in.])	Outside Diameter (cm [in.])	Total Length (cm [in.])	Cap Thickness (cm [in.])
Cesium Chloride Capsule	Inner	316L Stainless Steel	0.241, 0.262, or 0.345 (0.095, 0.103, or 0.136)	5.72 (2.25)	50.102 (19.725)	1 (0.4)
	Outer	316L Stainless Steel	0.277, 0.302, or 0.345 (0.109, 0.119, or 0.136)	6.668 (2.625)	52.769 (20.775)	1 (0.4)
Strontium Fluoride Capsule	Inner	Hastelloy® C-276	0.305 or 0.345 (0.120 or 0.136)	5.715 (2.225)	51.054 (19.05)	1 (0.4)
	Outer	316L Stainless Steel[b]	0.277, 0.302, or 0.345 (0.109, 0.119, or 0.136)	6.668 (2.625)	51.05 (20.10)	1 (0.4)

® Hastelloy is a registered trademark of Haynes International, Kokomo, Indiana.

Table H-1. Capsule Properties

Capsule Type	Containment Boundary	Material	Wall Thickness[a] (cm [in.])	Outside Diameter (cm [in.])	Total Length (cm [in.])	Cap Thickness (cm [in.])
Type W Overpack	Single	316L Stainless Steel	0.318 (0.125)	8.26 (3.25)	55.436 (21.825)	1 (0.4)

Note: Capsule data are taken from HNF-22687, *WESF Capsule Data Book*.

a. The specified wall thickness of the capsules was changed during production.

b. Some of the initial strontium fluoride capsules were made with Hastelloy C-276 outer capsules.

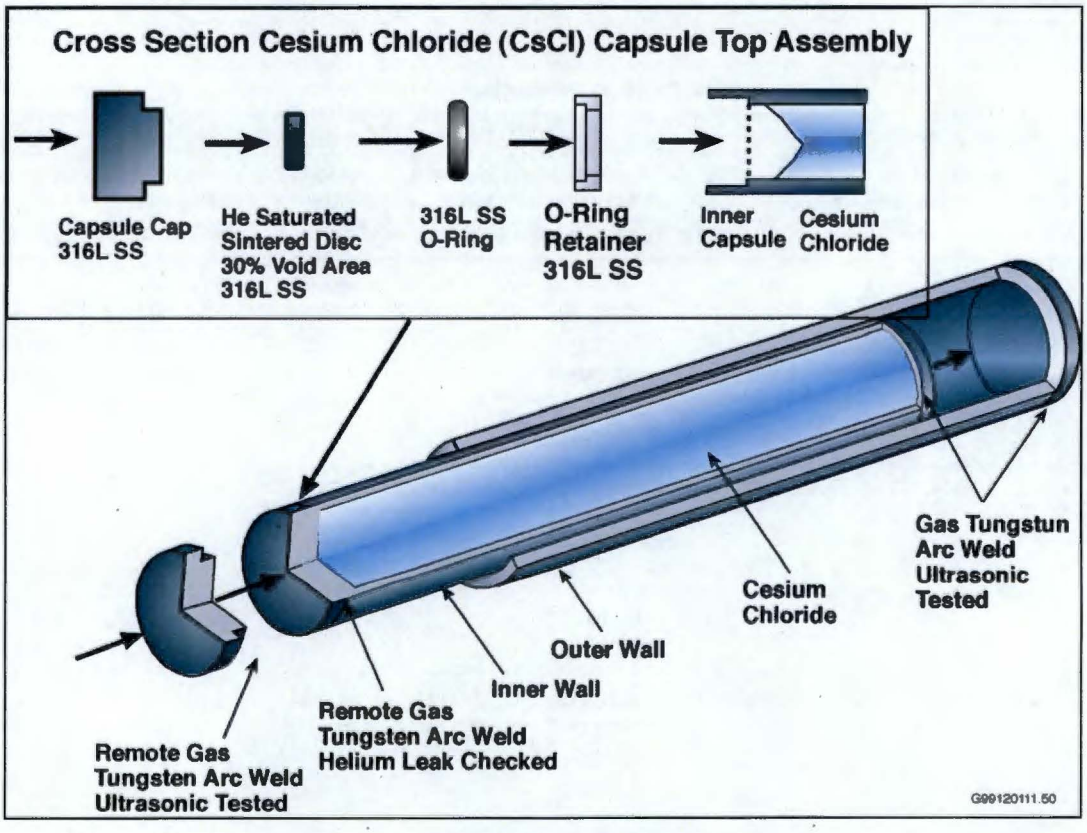

Figure H-5. Cesium Capsule

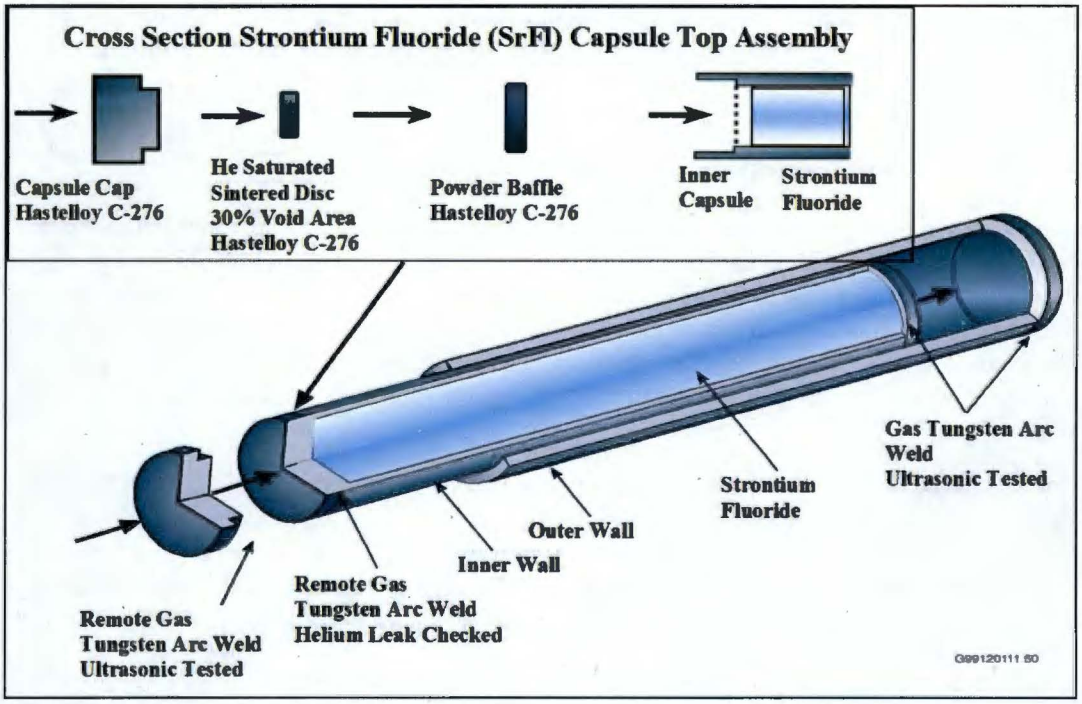

Figure H-6. Strontium Capsule

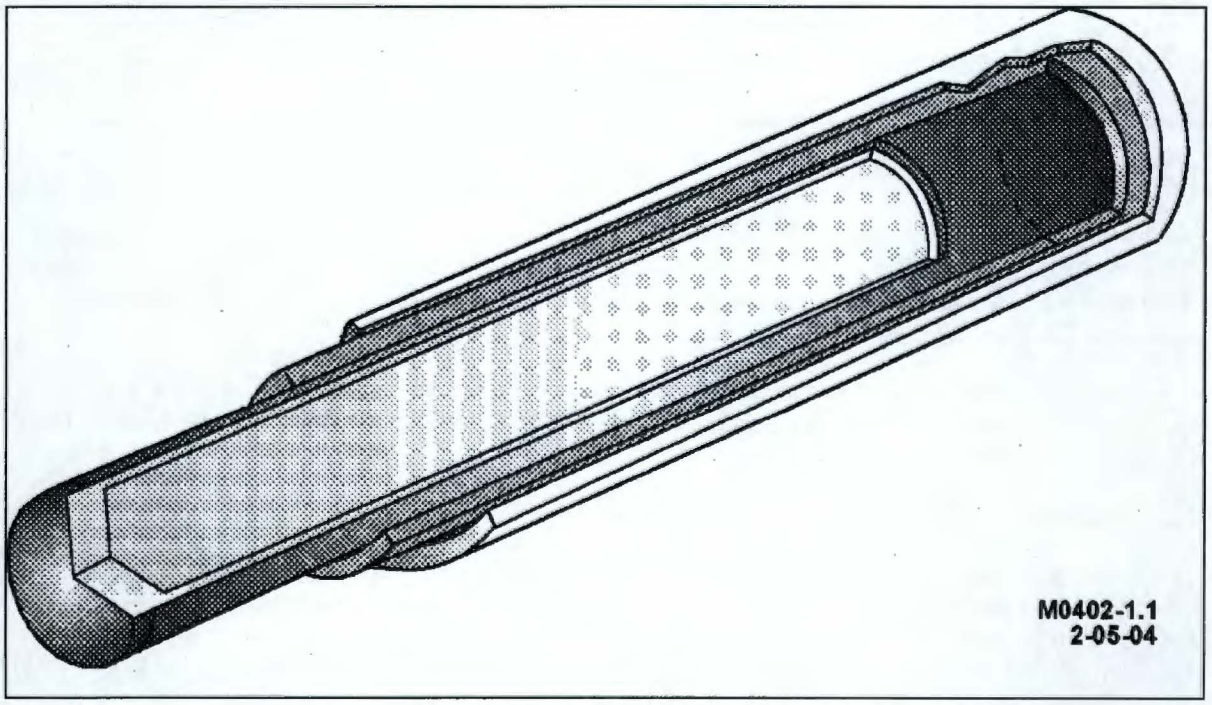

Figure H-7. Type W Overpack (Typical)

Of the cesium capsules, 23 are referred to as Type-W overpacks (Figure H-7) which were fabricated and overpacked at the 324 Building from 1997 to 1999. Type-W overpacks are made of stainless steel and have a length of approximately 55.436 cm (21.825 in.) and a diameter of approximately 8.26 cm (3.25 in.).

All capsules have been scribed with a unique identifier for tracking purposes.

Currently, Pool Cells 1, 3, 4, 5, 6, and 7 collectively store all of the cesium and strontium capsules. These pool cells are filled with deionized water to a depth of approximately 4.0 m (13 ft) and contain three capsule storage racks that store capsules in an upright position in designated locations. Each position within the capsule storage racks in the various pool cells has been assigned a unique identifier to readily track the exact location of each individual capsule. Capsule locations are documented and maintained in an electronic database. Underwater storage of the capsules provides both radioactive shielding and heat removal.

Capsules may be moved between pool cells or between Hot Cell G and Pool Cell 12. Underwater pool cell tongs are used to obtain the designated capsule from its storage location (i.e., rack position within the specified pool cell). The capsule is then transported to Pool Cell 12 via the corresponding pool cell transfer port. From here, the capsule may be temporarily stored on the pool cell floor or relocated to a different pool cell (via transfer port) for storage in a designated capsule storage rack location or to Hot Cell G via the capsule transfer cart.

If a capsule is suspected of leaking, then it will be transferred to Hot Cell G where further examination and performance testing will take place. Nonconforming or failed capsules may be overpacked and/or placed in shielded storage within Hot Cell G.

H2.5 Products and Production Processes

The WESF OUG does not produce products nor have production processes.

H2.6 List of Wastes

Two waste streams are managed at WESF consisting of the cesium chloride and strontium fluoride salts that are stored within double-walled capsules. The cesium and strontium salts are known to have chemical impurities with associated dangerous waste codes (shown in parentheses) consisting of barium (D005), cadmium (D006), chromium (D007), lead (D008), and silver (D011).

For a comprehensive list of waste managed in accordance with *Resource Conservation and Recovery Act of 1976* (RCRA) regulations, including classification and estimated annual quantities, refer to the WESF Part A Form located in Addendum A.

H2.7 Dangerous Waste Management Units

The WESF OUG consists of three dangerous waste management units (DWMUs): two operating and one closing, as depicted in Figure H-1. The Pool Cells DWMU and Hot Cell G DWMU remain operational because both are necessary for continued maintenance and storage of the cesium and strontium capsules. The third DWMU consists of Hot Cell A through Hot Cell F, which is no longer necessary to support WESF storage operations and, therefore, is considered a closing unit.

This plan addresses closure of the WESF OUG. Partial closure plans for the Pools Cells and Hot Cell G DWMUs are individually described in Appendices H-A and H-B, respectively. Upon completion of the closure activities specified in Appendices H-A and H-B, the WESF OUG will have achieved RCRA clean

closure. Upon such time, WESF shall remain in place until final disposition is addressed using *Comprehensive Environmental Response, Compensation, and Liability Act of 1980* remedial actions correlated to B Plant.

This page intentionally left blank.

Appendix H-A

Pool Cells Dangerous Waste Management Unit

This page intentionally left blank.

Contents

H-A1 Introduction H-A-1

H-A2 Pool Cells Dangerous Waste Management Unit H-A-1

H-A2.1 Unit Description H-A-1

H-A2.1.1 Pool Cell Piping H-A-2

H-A2.1.2 Pool Cell Monitoring Equipment and Systems H-A-3

H-A2.1.3 Equipment and Tools H-A-4

H-A2.1.4 Pool Cell Area Ventilation System H-A-5

H-A2.1 Pool Cell Storage Operations H-A-5

H-A2.1.1 Capsule Examinations H-A-7

H-A2.2 Maximum Waste Inventory H-A-10

H-A3 Closure Performance Standards H-A-10

H-A3.1 Clean Closure Levels H-A-11

H-A4 Health and Safety Requirements H-A-12

H-A4.1 Personnel Training Requirements H-A-12

H-A4.2 Security Measures H-A-12

H-A4.3 Inspection Requirements H-A-13

H-A5 Closure Activities H-A-13

H-A5.1 Pool Cell Water Removal H-A-14

H-A5.2 Equipment Deactivation, Isolation, and Removal Activities H-A-14

H-A5.3 Records Review and Visual Inspection H-A-15

H-A5.4 Decontamination H-A-15

H-A5.5 Confirmation of Closure H-A-15

H-A6 Identifying and Managing Waste Generated During Closure H-A-16

H-A6.1 Water Removed from Pool Cells H-A-16

H-A6.2 Equipment Removed from Pool Cells H-A-16

H-A6.3 Water Collected from Decontamination Activities H-A-16

H-A7 Role of the Independent Qualified Registered Professional Engineer H-A-17

H-A8 Certification of Clean Closure H-A-17

H-A8.1 Conditions that Will Be Achieved When Closure is Complete H-A-17

H-A9 Closure Schedule and Time Frame H-A-17

H-A10 Cost of Closure H-A-19

Figures

Figure H-A1. WESF Dangerous Waste Management Units H-A-2
Figure H-A2. Pool Cell Circulation and Drain Lines H-A-3
Figure H-A3. Isometric Drawing of Pool Cell Systems H-A-4
Figure H-A4. K1, K2, and K4 Ventilation Systems H-A-6
Figure H-A5. WESF Pool Cell Storing Capsules (June 2012) H-A-8
Figure H-A6. Moving Capsules (June 2012) H-A-9

Tables

Table H-A1. WESF Pool Cells DWMU Closure Activities Schedule H-A-18

H-A1 Introduction

This appendix discusses closure activities for the Pool Cells (1 through 8 and 12) dangerous waste management unit (DWMU), which is part of the Waste Encapsulation and Storage Facility (WESF) Operating Unit Group (OUG).

As a miscellaneous storage unit, the WESF Pool Cells DWMU must undergo *Resource Conservation and Recovery Act of 1976* (RCRA) clean closure. The term "clean closure" refers to decommissioning of the unit and performing closure activities that result in complete removal of all waste from the unit and complete removal or decontamination of all structures, equipment, debris, environmental media (i.e., soil and groundwater), and other materials affected by releases at or from the unit. This plan describes in detail the closure activities necessary to establish clean closure of the Pool Cells DWMU, which include pool cell water removal; isolation/removal of pool cell equipment/systems; records review (i.e., capsule storage, operating and inspection documentation) for documented spills or releases of mixed waste; visual inspection of the Pool Cells DWMU to identify any cracks, holes, or other types of breaches in the pool cell structure significant enough to reach underlying soil; decontamination; and visual inspection to confirm that the clean debris surface standard has been achieved. Upon completion of the specified closure activities, the Pool Cells DWMU clean closure performance standards will be achieved, at which point the unit will be considered closed under RCRA. Once clean closure is achieved, the Pool Cells DWMU shall remain in place until final disposition of the WESF OUG is addressed using *Comprehensive Environmental Response, Compensation, and Liability Act of 1980* (CERCLA) remedial actions correlated to B Plant.

Closure of the Pool Cells DWMU will be performed in accordance with the closure schedule provided in Section H-A9. Within 60 days upon completion of closure activities, the Permittees shall provide the Washington State Department of Ecology (Ecology) with a closure certification in accordance with WAC 173-303-610(6), "Dangerous Waste Regulations," "Closure and Post-Closure." The closure certification will provide supportive evidence that the Pool Cells DWMU has achieved the established clean closure standards.

This closure plan complies with the closure requirements outlined in WAC 173-303-610(2) through WAC 173-303-610(6) and has been developed using historical information, process knowledge, and various guidance documents. Amendments to this closure plan will be submitted as a permit modification in accordance with WAC 173-303-610(3)(b) and WAC 173-303-830, "Permit Changes," as applicable.

Please note, the terms "mixed waste" and/or "waste," when seen in this document, refer to dangerous waste or hazardous waste, as applicable.

H-A2 Pool Cells Dangerous Waste Management Unit

The pool cell area, located on the west end of the 225-B Building, is approximately 10 m (34 ft) wide by 22 m (72 ft) long by 4.0 m (13 ft) high (Figure H-A1). The pool cell area has 12 pool cells that support underwater storage of the cesium and strontium capsules; however, only Pool Cells 1 through 8 and 12 comprise the Pool Cells DWMU.

H-A2.1 Unit Description

All pool cells are constructed of reinforced structural concrete with stainless steel liners. The pool cell liners are constructed of 16-gauge type 304 stainless steel on the sides and 14-gauge type 304 stainless steel flooring. The pool cell walls are approximately 30 cm (12 in.) thick, while the pool cell floors (with the exception of Pool Cell 12, which is approximately 46 cm [18 in.] thick) are approximately 23 cm (21 in.) thick.

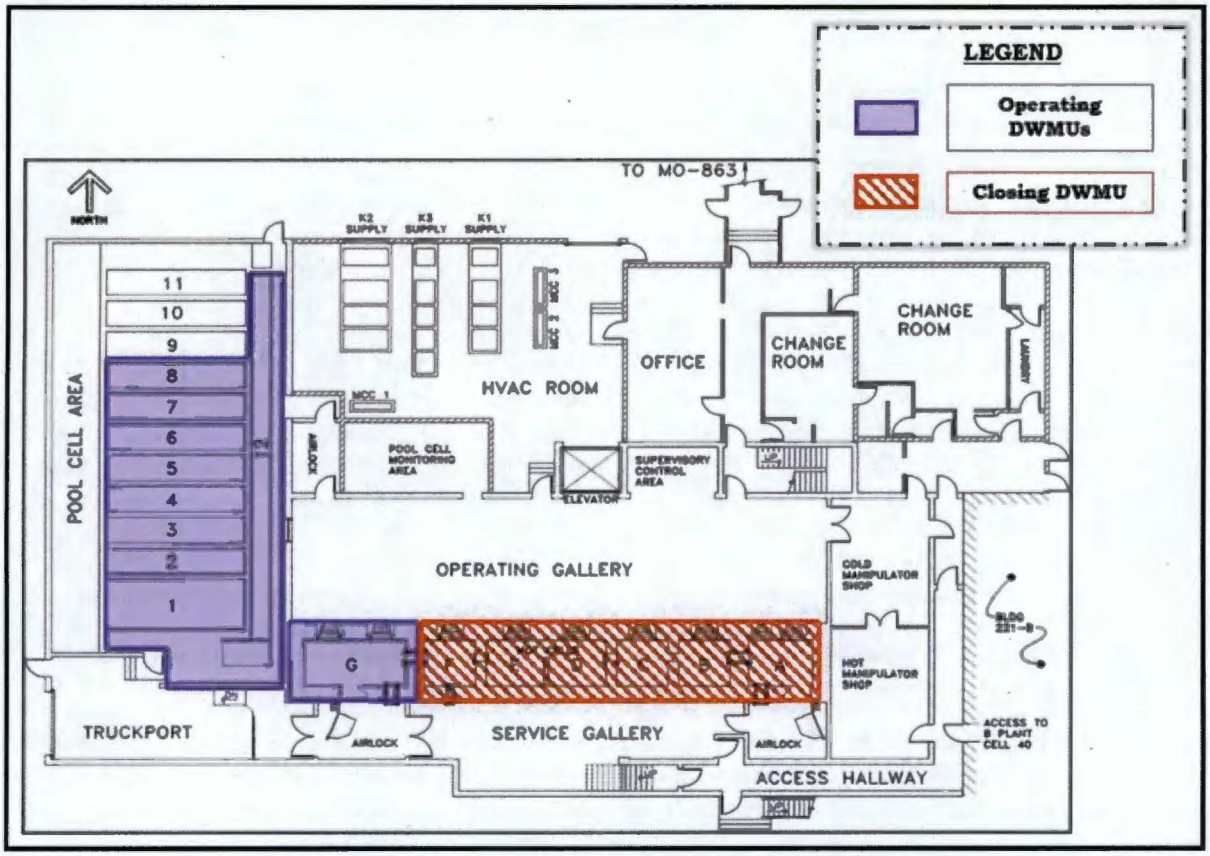

Figure H-A1. WESF Dangerous Waste Management Units

Pool Cell 1 is approximately 2.67 m (8.75 ft) wide by 6.629 m (21.75 ft) long and 5.5 m (18 ft) deep. Pool Cells 2 through 11 are approximately 1.35 m (4.42 ft) wide by 6.629 m (21.75 ft) long and 5.5 m (18 ft) deep. Pool Cell 12 is approximately 0.9 m (3 ft) wide by 19.79 m (64.92 ft) long and 4.72 m (15.5 ft) deep. Pool Cell 12 runs along the east end of Pool Cells 1 through 11 and contains a cask pit located at the southern end of the pool. The cask pit is approximately 1.35 m (4.42 ft) wide by 2.26 m (7.42 ft) long and 5.5 m (18 ft) deep.

Transfer ports (i.e., manually operated ball valves) connect Pool Cells 1 through 11 to Pool Cell 12 and are used to transfer capsules or water between the pool cells. Each transfer port is located approximately 0.9 m (3 ft) above the pool cell floor and contains a manual indicator that displays the valve position (open versus closed).

All pool cells, except Pool Cell 12, are designed for cover block installation; however, as a precautionary measure, cover blocks are not normally installed on pool cells that store capsules to prevent potential damage to the underlying capsules. Pool Cell 1 has one approximately 76 cm (30 in.) thick concrete cover block installed, while Pool Cells 8 through 11 each have three concrete cover blocks installed that can be removed, as necessary, to access equipment.

H-A2.1.1 Pool Cell Piping

Each pool cell has a stainless steel circulation line that is approximately 7.6 cm (3.0 in.) in diameter, as well as an abandoned stainless steel drain line that is approximately 5 cm (2 in.) in diameter. A simplified schematic of the pool cell circulation and drain lines is shown in Figure H-A2.

Pool Cell 12 contains a schedule 40 painted carbon steel fill pipe that extends through the north wall of the pool cell area to the outside of the 225-B Building. The fill pipe is approximately 6.4 cm (2.5 in.) in diameter and has a total length of less than 2 m (7 ft). There are no plugs or valves associated with the fill pipe, except for the dust cap that covers the standard fire hose connection on the outside end of the pipe.

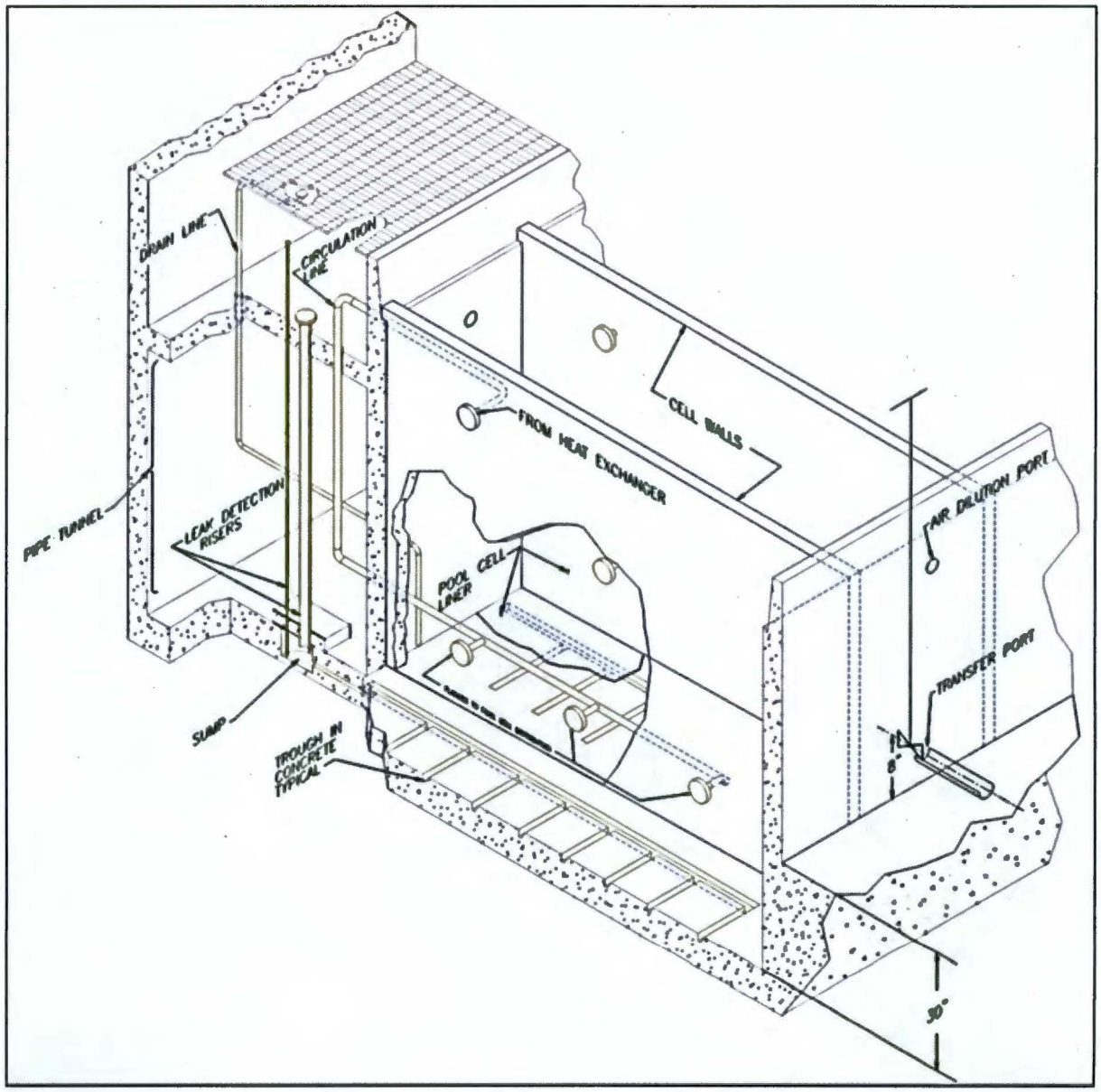

Figure H-A2. Pool Cell Circulation and Drain Lines

H-A2.1.2 Pool Cell Monitoring Equipment and Systems

The pool cells are equipped with the following monitoring equipment and systems that support capsule storage operations:

- Temperature indicators and alarms
- Heat exchangers

- Circulation pumps
- Closed-loop cooling system
- Pool cell water leak detection system
- Pool cell water level monitoring system
- Beta monitoring system (located in Pool Cells 1, 3 through 7, and 12)

The following systems also support the pool cells:

- Deionized water system
- Pool cell normal ion exchange system
- Pool cell emergency ion exchange system
- Pool cell cleaning system

Figure H-A3 provides a simplified schematic of the various pool cells systems.

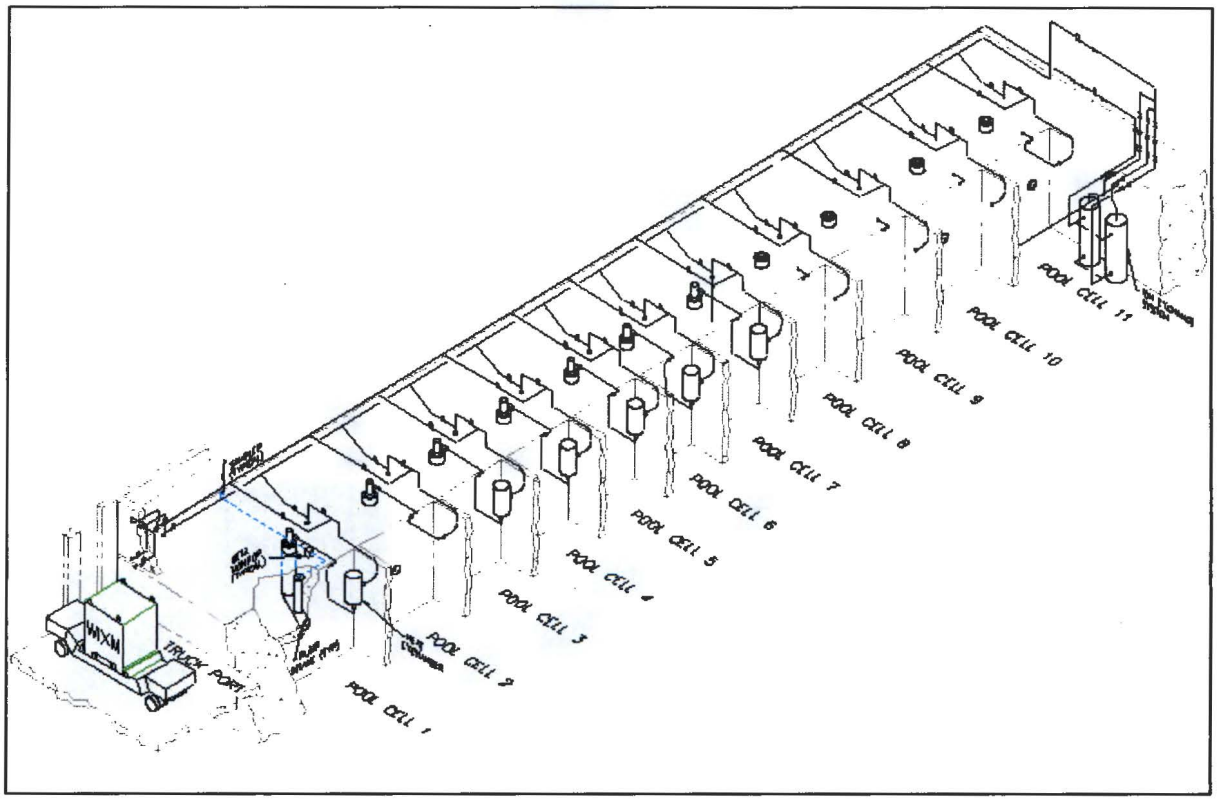

Figure H-A3. Isometric Drawing of Pool Cell Systems

H-A2.1.3 Equipment and Tools

Several other types of equipment and tools are used in the pool cells for capsule movement, examination, storage, and maintenance activities.

Pool Cells 1 and 3 through 7 each contain one small (13 by 13 grid) and two large (18 by 21 grid) capsule storage racks that store capsules in an upright position in designated locations. Capsules can be transferred underwater between pool cell capsule storage rack locations or to the capsule transfer cart

using pool cell tongs. The tongs are also used to perform certain tests as well as retrieve items that were unintentionally dropped into the pool cells (e.g., pens, badges, and dosimeters).

An underwater camera system, as well as underwater lighting, may be used for viewing the capsules or pool cell structures.

A motorized catwalk, approximately 1.2 m (4.0 ft) wide by 7.6 m (25 ft) long, is located over the pools. The catwalk can travel the full length of the pool cell area, providing access to each of the pool cells for capsule examination, movement, and maintenance activities. On each side of the length of the catwalk, there is protective railing for personnel safety. The railing also contains supports for the camera and pool cell tools used during capsule examination and movement activities.

The pool cells have a maintenance platform that is used to perform maintenance on the pool cell heat exchanger(s) and other pool cell systems. The platform is designed so that it cannot fit into a pool cell regardless of the orientation.

H-A2.1.4 Pool Cell Area Ventilation System

The ventilation system at WESF is designed to produce pressure boundaries that prevent migration from areas with high potential for contamination with radioactive particulates to areas with less potential for contamination to the atmosphere. Areas with high potential for contamination are maintained at a negative pressure with respect to uncontaminated areas, which means air flows from areas of lower potential contamination to areas of higher potential contamination. There are four separate supply systems and three separate exhaust systems that service the confinement areas at WESF.

The K4 heating, ventilation, and air conditioning system supplies 100 percent outside air to the pool cell area. Outside air is filtered and heated or cooled, as necessary, prior to entering the centrifugal fan, which distributes the air to the pool cell area.

The pool cell area is exhausted from the K1 exhaust system, which sequentially passes through one stage of pre-filters, one stage of bag filters, and two stages of high-efficiency particulate air filters. One of two redundant fans exhausts the air from the filter banks through the monitored 296B-10 stack.

A process flow diagram of the K4 supply and K1 exhaust ventilation systems is shown in Figure H-A4.

H-A2.1 Pool Cell Storage Operations

Due to the radioactive nature of the mixed waste contents, all cesium and strontium capsules are stored underwater (Figure H-A5). Underwater storage of the capsules provides shielding from the radioactive component of the mixed waste contents for the worker protection as well as cooling for the capsules. Capsule storage, maintenance, and management operations are designed to maintain the structural integrity of the double-walled capsules and, therefore, ensure that the sealed capsules will not rupture or leak.

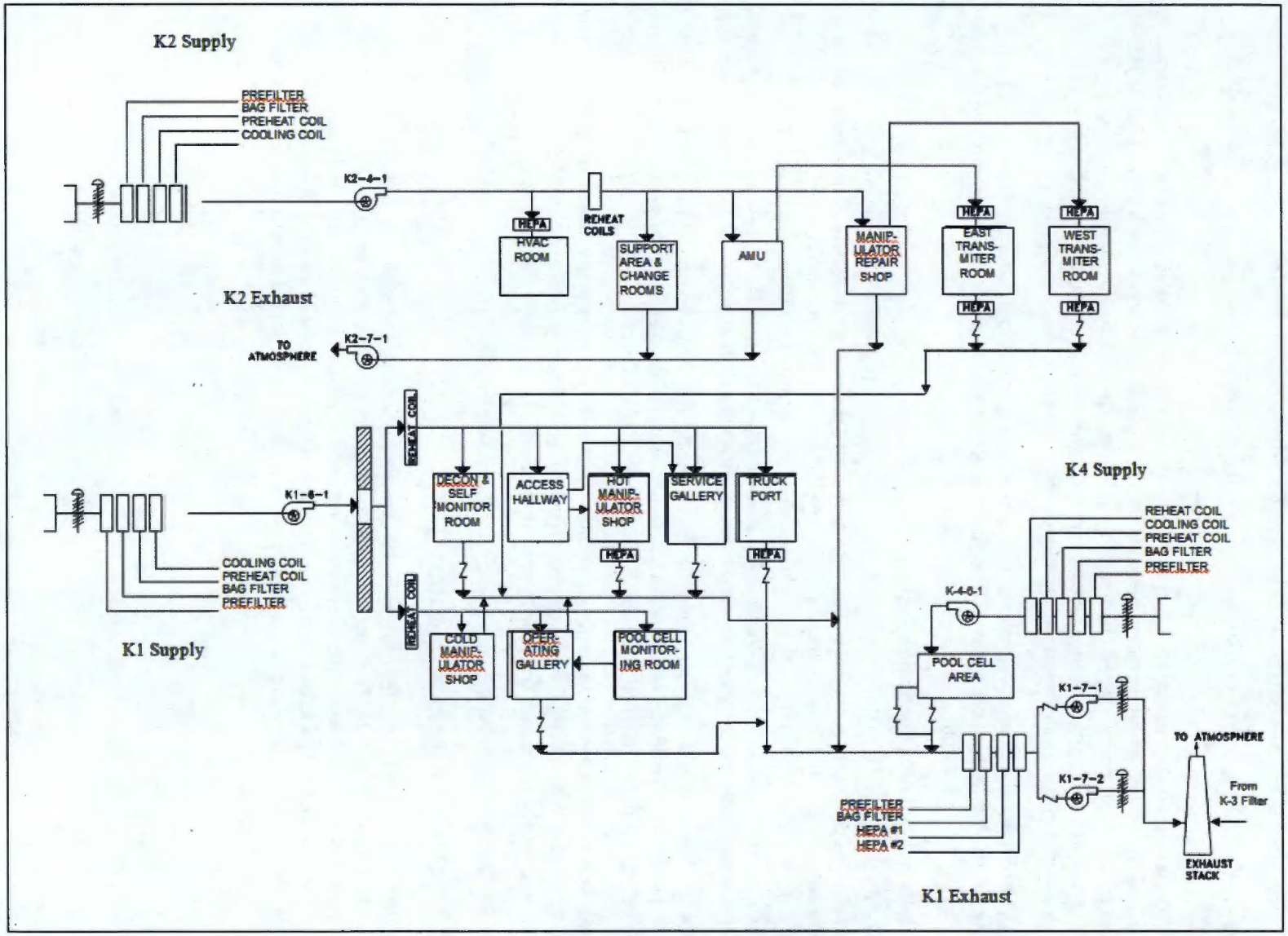

Figure H-A4. K1, K2, and K4 Ventilation Systems

Pool Cells 1 and 3 through 7 are the primary pool cells used to store all of the cesium and strontium capsules. Each of these pools is filled with approximately 4.0 m (13 ft) of deionized water and contains three racks that store capsules in an upright position in designated locations. Each position within the capsule storage racks in the various pool cells has been assigned a unique identifier to track the exact location of each, individual capsule. Furthermore, all capsule end caps have been scribed with a unique identifier for tracking purposes. Capsule locations are documented and maintained in the WESF operating record.

The pool cells are equipped with differential pressure type water level indicators and alarms. Pool cell water levels are displayed in the pool cell monitoring area adjacent to and accessible from the operating gallery. Water levels can also be determined using pool cell weight factor indicators, a manual level indicator, or visual comparison with equipment that has a known documented level in the pool cell. Periodically deionized water from the WESF deionized water system is added to the pool cells to maintain water levels due to water loss attributed to evaporation.

In the event of an emergency (e.g., high radiation levels in the pool cell area), water may be remotely added to Pool Cell 12 via the fill pipe located on the outside of the north wall of the pool cell area. Since the pool cell transfer ports are normally kept in an open position, water will flow from Pool Cell 12 into the active pool cells. However, if the transfer ports are closed, the water will overflow through the air dilution ports between Pool Cell 12 and the other pool cells. The float style level monitor located in Pool Cell 12 would be used to determine when the appropriate amount of water has been added since it can be seen from outside the 225-B Building when the personnel access door on the north wall is open.

Capsules may be moved between pool cells, using pool cell tongs, which allow for remote handling of the capsule (Figure H-A6). Pool cell tongs are used to obtain the designated capsule from its storage location (i.e., rack position within the specified pool cell). The capsule is then transported underwater to Pool Cell 12 via the pool cell transfer port. From here, the capsule may be temporarily stored on the pool cell floor, relocated to a different pool cell (via pool cell transfer port) for storage, or transferred to Hot Cell G via the capsule transfer cart.

If a capsule is suspected of leaking, it will be transferred to Hot Cell G where further examination and performance testing will take place.

H-A2.1.1 Capsule Examinations

There are two different types of capsule examinations performed in the pool cells: visual examinations and inner capsule movement (ICM) tests. Due to the significant radiation hazard, all capsule examinations are performed remotely and on an as needed basis.

Visual examinations of the capsules stored in the pool cells are performed using an underwater video camera. Underwater lighting may also be used to assist the visual examination. Visual examinations are performed to identify any obvious visual defects in the capsule (e.g., visible corrosion or cracking, unexplainable discoloration, and illegible capsule identification number) as well as perform capsule inventory.

ICM tests are performed to determine if the inner capsule moves freely within the outer capsule. This test is used to detect an increase in the diameter of the inner capsule caused by swelling or water that has accumulated in the annular space between the inner and outer capsules.

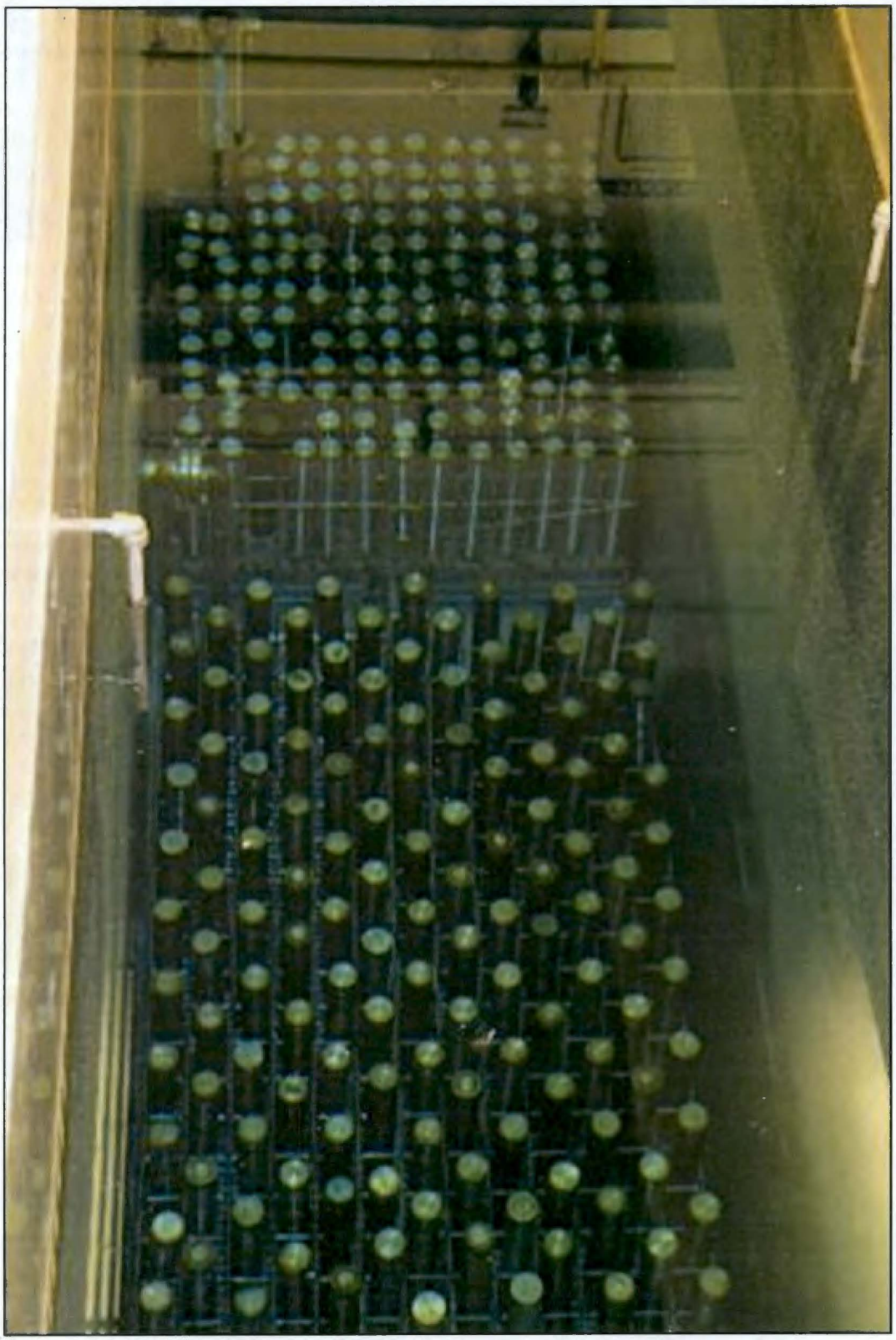

Figure H-A5. WESF Pool Cell Storing Capsules (June 2012)

Figure H-A6. Moving Capsules (June 2012)

If, at any point, a capsule is noted as having an identification number that is not clearly visible, the capsule will be transferred to Hot Cell G where the outer capsule will be polished and rescribed.

H-A2.2 Maximum Waste Inventory

WESF currently stores 1,936 stainless steel capsules containing radioactive cesium chloride and strontium fluoride salts. WESF does not generate products, have any production processes, nor receive mixed waste from another onsite and/or offsite facility.

Pool Cells 1 through 8 and 12 comprise the Pool Cells DWMU. Capsules are stored in capsule storage racks located in Pool Cells 1, 3, 4, 5, 6, and 7. Each of these pool cells contains three capsule storage racks, for a total of 715 capsule storage locations per pool cell; therefore, the 6 pool cells can hold up to 4,290 capsules collectively.

Even though Pool Cell 12 is normally used for transferring capsules from Hot Cell G to one of the six pool cells mentioned above (or vice versa), Pool Cell 12 can also be used for temporary capsule storage. The storage capacity of Pool Cell 12 has been calculated by dividing the area of the pool cell floor (approximately 177,450 cm^2 [27,650 in^2]) by the area required to store each capsule horizontally, in a single layer (not stacked) on the pool cell floor (approximately 610 cm^2 [96 in^2]) because there are no capsule storage racks located in Pool Cell 12. Based on these calculations, the storage capacity of Pool Cell 12 is 288 capsules.

Although Pool Cells 2 and 8 are within the Pool Cells DWMU boundary, both of these pool cells are not used for capsule storage. Therefore, combining the storage capacity of Pool Cells 1, 3, 4, 5, 6, and 7 (4,290 capsules) with the storage capacity of Pool Cell 12 (288 capsules) equals the total maximum storage capacity of 4,578 capsules for the Pool Cells DWMU.

Since each capsule contains approximately 1 L (0.264 gal) of cesium chloride or strontium fluoride waste, the maximum waste inventory of the Pool Cells DWMU is approximately 4,578 L (1,209 gal).

H-A3 Closure Performance Standards

Closure performance standards for the Pool Cells DWMU will be based on WAC 173-303-610(2) which, in accordance with WAC 173-303-610(2)(a), requires closure of the facility in a manner that:

1. Minimizes the need for further maintenance (WAC 173-303-610(2)(a)(i)).
2. Controls, minimizes or eliminates to the extent necessary to protect human health and the environment (HHE), post-closure escape of dangerous waste, dangerous constituents, leachate, contaminated runoff, or dangerous waste decomposition products to the ground, surface water, groundwater, or atmosphere (WAC 173-303-610(2)(a)(ii)).
3. Returns the land to the appearance and use of surrounding land areas, to the degree possible, given the nature of the previous dangerous waste activity (WAC 173-303-610(2)(a)(iii)).

Furthermore, clean closure requires removal or decontamination of all dangerous waste, dangerous waste residues, and equipment, bases, liners, soils/subsoils, and other materials containing or contaminated with dangerous waste or dangerous waste residue in accordance with WAC 173-303-610(2)(b).

These closure performance standards are met through and further described in Sections H-A3.1 and H-A5 through H-A5.5.

H-A3.1 Clean Closure Levels

The Pool Cells DWMU will be clean closed to the performance standards identified in WAC 173-303-610(2)(b)(ii). During closure activities, equipment will be removed from the DWMU which will then be decontaminated in accordance with WAC 173-303-610(5) and clean closed to the clean debris surface standards in accordance with 40 CFR 268.45, "Land Disposal Restrictions," "Treatment Standards for Hazardous Debris." Table 1, "Alternative Treatment Standards for Hazardous Debris."

Under WAC 173-303-610(2)(b)(ii), clean closure standards in this closure plan coordinate with Ecology Publication 94-111, *Guidance for Clean Closure of Dangerous Waste Units and Facilities*, Section 5.0, "Debris," which indicates that hazardous debris must be treated to comply with applicable land disposal restriction (LDR) treatment standards specified in WAC 173-303-140, "Land Disposal Restrictions," which includes, by reference, 40 CFR 268, then ultimately disposed of in an appropriate waste disposal facility. Debris is managed utilizing one of the following three options:

- Debris can be removed from a closing unit and managed as a dangerous waste, treated to comply with applicable LDR treatment standards, and disposed of at an appropriate dangerous waste disposal facility.
- Debris can be managed in special types of units in waste that do not constitute placement in a land disposal unit and, therefore, do not trigger LDR treatment standards.
- Facility owners/operators, generators, and transporters can decontaminate debris and ask Ecology to make a determination that debris does not contain dangerous waste.

The Pool Cells DWMU will be decontaminated in accordance with LDR treatment standards for hazardous debris established in 40 CFR 268.45, Table 1. Ecology Publication 94-111, Section 5.3.1, "Alternative Treatment Standards for Hazardous Debris," states:

> *"Ecology recognizes that not all materials requiring decontamination during closure will meet the regulatory definition of "hazardous debris" listed in the regulations associated with the Alternative Treatment Standards for Hazardous Debris. For example, materials requiring decontamination during closure may include structures, such as concrete containment systems, that are not intended for disposal. Although these structures will not meet the regulatory definition of "hazardous debris," they require adequate and appropriate decontamination during closure. The Alternative Treatment Standards for Hazardous Debris represent the best demonstrated available technology (BDAT) for materials typically subject to decontamination during closure and, as such, are appropriate minimum clean closure decontamination standards regardless of the regulatory status of the materials in question."*

Decontamination of the Pool Cells DWMU shall be achieved utilizing the appropriate physical extraction technology, as further described in Section **Error! Reference source not found.**. As stated in Ecology Publication 94-111, Section 5.1, "Managing Hazardous Debris as Dangerous Waste":

> *"Debris treated using one of the established technologies is considered to comply with LDR treatment standards with no further testing needed. In addition, if debris is treated using an approved extraction or destruction technology, it need not be managed as a dangerous waste after treatment..."*

Therefore, upon completion of decontamination activities, clean closure of the Pool Cells DWMU shall be achieved.

H-A4 Health and Safety Requirements

Closure of the Pool Cells DWMU will be performed in a manner to ensure the safety of personnel and the surrounding environment by implementing the personnel training requirements, site security measures, and inspection requirements, described in the following sections, during the closure period.

H-A4.1 Personnel Training Requirements

Qualified personnel will be trained in and perform all necessary closure activities in compliance with the applicable safety and environmental procedures identified in WESF Addendum G, "Personnel Training." All field operations will be performed in accordance with applicable health and safety requirements. Personnel will be equipped with appropriate personal protective equipment (PPE) for the closure activity being performed.

The Permittees have instituted training and/or qualification programs to meet training requirements imposed by regulations, U.S. Department of Energy (DOE) orders, and national standards such as those published by the American National Standards Institute/American Society of Mechanical Engineers. For example, the environmental, safety, and health training program provides workers with the knowledge and skills necessary to execute assigned duties safely. Attachment 5 to the Hanford Facility RCRA Permit describes specific requirements for the Hanford Facility Personnel Training Program. The Permittees will comply with the WESF Training Matrix, located in Table G-1 of the WESF Addendum G, which provides training requirements for Hanford Facility personnel associated with closure activities for the Pool Cells DWMU.

Project-specific safety training will include knowledge and skills necessary for personnel to perform work safely and in accordance with quality assurance (QA) requirements. Pre-job briefings will be performed to evaluate daily activities and associated hazards by considering the following factors:

- Objective of the activities
- Individual tasks to be performed
- Hazards associated with the planned tasks
- Environment in which the job will be performed
- Facility where the job will be performed
- Equipment and material required
- Safety protocols applicable to the job, including PPE requirements
- Training requirements for individuals assigned to perform the work
- Level of management control
- Emergency contacts

Training records are maintained for each employee in an electronic database. The Permittees' training organization maintains the training records system.

H-A4.2 Security Measures

The Pool Cells DWMU is located inside the 225-B Building and is not accessible for unknowing or unauthorized entry by persons or livestock. The building is protected by locked doors with posted danger signs. Vehicular access to roads leading to the DWMU area is controlled through the Hanford Facility 24-hour controlled access points, which are posted with restrictive signage (WA7890008967, *Hanford Facility Resource Conservation and Recovery Act Permit* [hereinafter referred to as the Hanford Facility

RCRA Permit] Attachment 3, "Security"). Collaboratively, these measures help ensure that only authorized personnel will be allowed in the area. Additional measures may be taken to restrict unauthorized access during the closure period, if deemed necessary.

H-A4.3 Inspection Requirements

During the closure period, to prevent threats to HHE, the Pool Cells DWMU will be inspected in accordance with WAC 173-303-320, "General Inspection," requirements.

Two visual inspections of the Pool Cells DWMU will be conducted during closure. One visual inspection will be performed upon completion of the closure activity consisting of equipment isolation and removal from the pool cells. This visual inspection is necessary to determine the extent of any releases at or from the DWMU that could potentially impact the surrounding environment. The other visual inspection will be performed subsequently to decontamination activities. This visual inspection is necessary to verify that the Pool Cells DWMU meets the clean debris surface standard, thereby confirming that RCRA clean closure has been achieved. Further details on the pool cells visual inspections are provided in Sections H-A5.3 and H-A5.5.

Furthermore, the Pool Cells DWMU will be inspected annually until the clean closure certification is accepted by Ecology. The inspection will verify the following information:

- Posted danger signs at each entrance to the OUG are present, written in English, visible from all angles of approach, and legible from a distance of at least 7.6 m (25 ft).
- No evidence of unusual conditions exists at the closing DWMU site.

Inspection documentation must include, at a minimum, the date and time of inspection, observations, date and nature of corrective actions taken (if any), and printed name/signature of inspection personnel. Corrective actions taken as a result of an inspection must be remedied on a schedule that prevents hazards to HHE. Inspection documentation must be maintained in the WESF portion of the facility operating record for a minimum of five years after Ecology clean closure acceptance.

H-A5 Closure Activities

As a permitted miscellaneous storage unit, this DWMU is a candidate for clean closure under RCRA. Clean closure determinations for the Pool Cells DWMU will be based on successful completion of the closure activities outlined in this section.

The following closure activities, in sequential order, are required to achieve and verify clean closure of the Pool Cells DWMU:

- Pool cell water removal
- Equipment deactivation, isolation, and removal activities
- Records review and visual inspection
- Decontamination
- Confirmation of closure

Upon achieving clean closure, the Pool Cells DWMU will remain in place until final disposition of WESF is addressed using CERCLA remedial actions correlated to B Plant.

H-A5.1 Pool Cell Water Removal

The first closure activity for the Pool Cells DWMU consists of removing the water from Pool Cells 1 through 8 and 12. Prior to removal, the water will be recirculated and then sampled for characterization purposes. The water removed from the pool cells will be managed in accordance with Section H-A6.1.

H-A5.2 Equipment Deactivation, Isolation, and Removal Activities

Once the water is removed from the pool cells, all equipment remaining within the DWMU boundary will need to be deactivated, isolated, and/or removed.

Pool cells need to be isolated from all other areas of the 225-B Building to ensure that any potential contamination remaining (i.e., hazardous debris) does not spread outside of the DWMU during decontamination activities. All pool cell monitoring equipment and systems (identified in Section H-A2.1.2) will be deactivated and isolated, as deemed necessary. Pool cell piping (identified in Section H-A2.1.1) will also be isolated. Isolation of the Pool Cells DWMU will include the following activities:

- Deactivation and isolation of the pool cells monitoring equipment and systems including all utility lines that remain connected to the pool cells
- Sealing of pool cell piping penetrations

Some pool cell equipment, systems, and piping may need to be removed for proper isolation of the Pool Cells DWMU. Any disassembled and/or removed pool cell components will be managed in accordance with Section H-A5.2.1.1.

H-A5.2.1.1 Removal of Wastes and Waste Residues

All equipment (e.g., piping and pool cell storage racks) that is removed from the pool cells will be managed in accordance with WAC 173-303 and WESF waste management practices. Removed equipment will be considered waste, which will be designated and shipped to an approved facility, for treatment, storage, and/or disposal (TSD). Upon removal and characterization, any equipment designated as nondangerous waste may be relocated and stored for future reuse, if deemed necessary.

Waste containers meeting U.S. Department of Transportation (DOT) requirements will be packaged and shipped in accordance with 49 CFR, "Transportation," criteria. Waste packaged in non-DOT regulation (large or irregular shaped) containers will be shipped in accordance with the DOE/RL-2001-36, *Hanford Sitewide Transportation Safety Document*. Transportation by highway will be the primary means of shipping waste; however, waste may also be shipped by air or rail.

Waste will be treated (if necessary) to meet LDR treatment standards specified in WAC 173-303-140, which includes by reference 40 CFR 268, then ultimately disposed of in an appropriate waste disposal facility.

While waste residues are not anticipated, if waste residues are found during clean closure activities, they will be managed in accordance with all applicable requirements of WAC 173-303-170, "Requirements for Generators of Dangerous Waste," through WAC 173-303-230, "Special Conditions." Waste subject to LDR requirements of WAC 173-303-140, which includes by reference 40 CFR 268, will be characterized, designated, stored, and/or treated, as applicable, prior to disposal in an approved waste disposal facility.

H-A5.3 Records Review and Visual Inspection

WESF capsule storage, operating, inspection, and spill records will be reviewed for documented spills or potential releases of dangerous waste within the Pool Cells DWMU. A visual inspection will then be performed to determine and document the presence of any cracks, holes, or other breaches in the stainless steel liner and underlying high-density concrete structure, sufficient to reach the underlying soil.

Collaborative results of the records review and visual inspection will be used to determine if dangerous waste or dangerous waste constituents could have been released to the environment.

Visual inspection of the Pool Cells DWMU will be performed and documented in accordance with the requirements of WAC 173-303-320 and shall include, at a minimum, the following information:

- Date, time, and location of inspection
- Observations made during the inspection
- Locations, dimensions, and photographs of all cracks, holes, or other breaches in the pool cell structure (if any)
- Corrective actions (if any) to prevent further contamination
- Name/signature of inspection personnel

Inspection documentation must be maintained in the WESF facility operating record for a minimum of five years after Ecology clean closure acceptance. Corrective actions taken as a result of the visual inspection must be remedied on a schedule that prevents hazards to the HHE.

H-A5.4 Decontamination

As previously mentioned in Section H-A3.1, decontamination of the Pool Cells DWMU shall be achieved utilizing the appropriate physical extraction technology listed in Table 1 of 40 CFR 268.45. In this case, the appropriate alternative treatment standard for any hazardous debris that potentially remains on the stainless steel structure is decontamination via the use of high-pressure steam and/or water sprays. Since it is very unlikely that there is any contamination and/or hazardous debris remaining within the Pool Cells DWMU boundary, the use of high-pressure steam and/or water sprays will achieve an adequate level of decontamination and will sufficiently achieve the clean debris surface standard.

Water or steam sprays of sufficient temperature, pressure, residence time, agitation, surfactants, and detergents, as applicable, will be applied to remove any potential hazardous contaminants from the debris surface or surface layers. Water generated from decontamination activities will be managed in accordance with Section H-A6.2.

H-A5.5 Confirmation of Closure

Upon completion of decontamination activities, the Pool Cells DWMU will need to be visually inspected to verify that the clean debris surface standard has been achieved. The term "clean debris surface" (as defined in 40 CFR 268.45, Table 1, footnote 3) means that the surface, when viewed without magnification, shall be free of all visible contaminated soil and hazardous waste except for residual staining from soil and waste consisting of light shadows, slight streaks, or minor discolorations. Soil and waste in cracks, crevices, and pits may be present provided that such soil and waste, as well as any staining, is limited to no more than 5 percent of each square inch of surface area.

To date, there has not been a documented spill or release of capsule contents. The previous closure activity regarding records review will be used to determine whether or not a spill or release of mixed waste has occurred over the lifespan of the WESF OUG. Even if the records review confirms that no spills or releases have occurred, a visual inspection of the Pool Cells DWMU will be performed to confirm that no waste residues remain after decontamination activities are complete. The visual inspection will be documented in accordance with the requirements of WAC 173-303-320 and shall include, at a minimum, the following information:

- Date, time, and location of inspection
- Observations made during the inspection
- Locations, dimensions, and photographs of residual staining (if any)
- Corrective actions (if any)
- Name/signature of inspection personnel

Inspection documentation must be maintained in the WESF facility operating record for a minimum of five years after Ecology clean closure acceptance. Corrective actions taken as a result of the visual inspection must be remedied on a schedule that prevents hazards to HHE.

Once it has been determined that the clean debris surface standard has been met, the Pool Cells DWMU shall have achieved clean closure under RCRA.

H-A6 Identifying and Managing Waste Generated During Closure

Closure activities for the Pool Cells DWMU could potentially result in generation of the following three waste streams requiring proper management and disposal: water removed from pool cells, equipment removed from pool cells, and water collected from decontamination activities.

H-A6.1 Water Removed from Pool Cells

The initial closure activity consists of removing the water from Pool Cells 1 through 8 and 12. Prior to removal, the pool cell water will be recirculated, and then sampled and characterized in accordance with requirements in WAC 173-303-070, "Designation of Dangerous Waste." The pool cell water will be transferred to either the Treated Effluent Disposal Facility or Effluent Treatment Facility, depending on sample results, for final treatment and/or disposal.

H-A6.2 Equipment Removed from Pool Cells

Pool cell equipment, including capsule storage racks and pool cell piping, will be removed prior to decontamination activities, as necessary. Such equipment will be managed as newly generated waste as previously mentioned in Section H-A5.2.1.1.

H-A6.3 Water Collected from Decontamination Activities

Water used to decontaminate the Pool Cells DWMU will be collected and containerized. The collected water is anticipated to be nondangerous and is considered a newly generated solid waste stream. Until confirmation of the nondangerous waste designation, waste must be handled in accordance with all applicable requirements of WAC 173-303-170 through WAC 173-303-230. The waste will be labeled, characterized in accordance with requirements in WAC 173-303-070, stored, transported to, and disposed of at an approved disposal facility.

H-A7 Role of the Independent Qualified Registered Professional Engineer

An Independent Qualified Registered Professional Engineer (IQRPE) will be retained to provide certification of closure, as required by WAC 173-303-610(6). The IQRPE will be responsible for observing field activities and reviewing documents associated with closure of the Pool Cells DWMU. At minimum, the following activities will be performed by the IQRPE:

- Observation and/or review of equipment isolation/removal activities and disposition records
- Observation and/or review of the Pool Cells DWMU visual inspection
- Observation and/or review of decontamination activities
- Observation and/or review of newly generated waste management and disposition records
- Verification that closure activities were performed in accordance with this closure plan

The IQRPE will record observations and reviews in a written report that will be retained in the WESF portion of the operating record. The resulting report will be used to develop the clean closure certification of the Pool Cells DWMU, which will then be provided to Ecology.

H-A8 Certification of Clean Closure

In accordance with WAC 173-303-610(6), within 60 days of completion of closure of the Pool Cells DWMU, certification that the DWMU has been closed in accordance with the specifications in this closure plan will be submitted to Ecology by registered mail or other means that establish proof of receipt (including applicable electronic means). The certification will be signed by the owner or operator, and signed and stamped by an IQRPE.

Upon request by Ecology, the following information will be submitted to support closure certification:

- All field notes and photographs relative to closure activities
- Description and justification of any minor deviations from the approved closure plan
- Documentation of the final disposition of all dangerous wastes and dangerous waste residues (if any)
- Verification that all closure activities were performed in accordance with the approved closure plan
- Description of the DWMU area upon completion of closure

H-A8.1 Conditions that Will Be Achieved When Closure is Complete

Upon completion of the closure activities outlined within this closure plan, the Pool Cells DWMU will be decontaminated to a clean debris surface standard and considered clean closed under RCRA. Once the entire WESF OUG has achieved RCRA clean closure, the OUG will be removed from the Hanford Facility RCRA Permit; however, WESF will be subject to future remedial action under CERCLA in conjunction with the established record of decision for B Plant. The WESF OUG shall remain in place until such time.

H-A9 Closure Schedule and Time Frame

Closure activities for the Pool Cells DWMU, as well as the anticipated duration for each activity, are outlined in Table H-A1 and Figure H-A7. Closure activities for the Pool Cells DWMU are expected to take longer than the allotted 180 days (WAC 173-303-610(4)(b)).

Approval of this closure plan will grant the Hanford Facility an extended closure period for performance of the closure activities, in accordance with WAC 173-303-610(4)(b); therefore, a separate extension request will not be filed. During the extended closure period, all steps to prevent threats to HHE, including compliance with all applicable permit requirements, will continue to be taken.

Within 60 days following completion of closure activities outlined in this closure plan, a closure certification will be submitted to Ecology, as outlined in Section H-A8.

Table H-A1. WESF Pool Cells DWMU Closure Activities Schedule

Closure Activity Description		
Primary Activity	**Secondary Activity**	**Duration**
Prior To Closure		
Submit Notification to Ecology of Intent to Close the Pool Cells DWMU	In accordance with WAC 173-303-610(3)(c)(i), at least 45 days prior to the date on which closure is expected to begin.	--
Begin Closure of the Pool Cells DWMU	Once all of the cesium and strontium capsules are removed from WESF, closure of the Pool Cells DWMU will commence.	Day 0
Closure Activities		
Pool Cell Water Removal	Remove pool cell water, characterize, and transfer to an appropriate TSD facility.	30 Days (Day 30)
Deactivation, Isolation, and/or Removal of Equipment	Deactivate, isolate, and/or remove equipment. Package and ship waste to an approved facility for treatment, storage, and/or disposal.	90 Days (Day 120)
Records Review	Perform review of capsule storage, operating, inspection, and spill records. (Note: Records review will be performed concurrently with previous closure activity)	90 Days (Day 120)
Visual Inspection of the Pool Cells DWMU	Inspect structural integrity (visible aspects only) for any cracks, holes, or other breaches in the pool cell structure.	10 Days (Day 130)
	Document visual inspection: Include photos, locations, and dimensions of cracks, holes, or other breaches in the Pool Cells DWMU structure (if any).	
Decontamination	Apply high-pressure steam and/or water to remove any potentially remaining hazardous contaminants.	60 Days (Day 190)
Confirmation of Closure	Visually inspect Pool Cells DWMU to verify that the clean debris surface standard has been achieved.	10 Days (Day 200)
	Document visual inspection: Include photos, locations, and dimensions of residual staining or waste remaining in cracks, crevices, or pits (if any) to verify that such staining and/or waste remaining is limited to 5% of each square inch of surface area.	

Table H-A1. WESF Pool Cells DWMU Closure Activities Schedule

Closure Activity Description		
RCRA Closure Activities Complete*		
Owner/Operators and IQRPE Submit Clean Closure Certification	In accordance with WAC 173-303-610(6), within 60 days of completion of closure a certification that the DWMU has been closed in accordance with the specifications in the approved closure plan will be submitted to Ecology.	60 Days (Day 260)

*RCRA clean closure achieved. DWMU shall remain in place until future remedial action takes place under CERCLA.

H-A10 Cost of Closure

An annual cost estimate outlining updated projections of anticipated closure costs for the Hanford Facility TSD units having final status is not required per Permit Condition II.H. The Hanford Facility is owned by DOE and operated by DOE and its contractors; therefore, in accordance with WAC 173-303-620(1)(c), the provisions of WAC 173-303-620, "Financial Requirements," are not applicable to the Hanford Facility.

This page intentionally left blank.

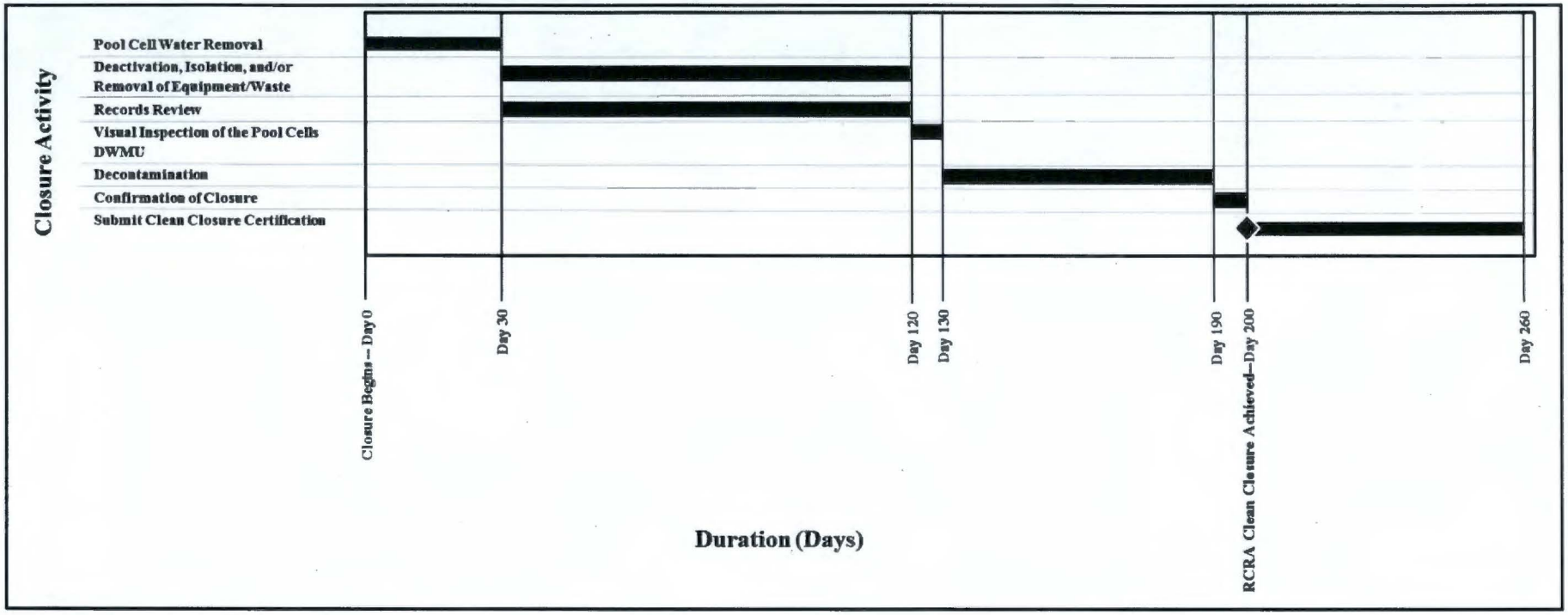

Figure H-A7. WESF Pool Cells DWMU Closure Schedule Timeline

This page intentionally left blank.

Appendix H-B

Hot Cell G Dangerous Waste Management Unit

This page intentionally left blank.

Contents

H-B1 Introduction H-B-1

H-B2 Hot Cell G Dangerous Waste Management Unit H-B-1

H-B2.1 Unit Description H-B-1
H-B2.1.1 Sump H-B-2
H-B2.1.2 Pass-Throughs H-B-2
H-B2.1.3 Personnel Entry Door H-B-3
H-B2.1.4 Viewing Windows H-B-3
H-B2.1.5 Manipulators H-B-3
H-B2.1.6 Transfer Chute H-B-4
H-B2.1.7 G-7 Shielded Storage H-B-4
H-B2.1.1 Miscellaneous Equipment H-B-4
H-B2.1.2 Supporting Systems H-B-4
H-B2.2 Operational History H-B-5
H-B2.3 Current Operations H-B-5
H-B2.3.1 Capsule Examinations H-B-5
H-B2.3.2 Capsule Maintenance H-B-5
H-B2.3.3 Capsule Storage H-B-7
H-B2.4 Maximum Waste Inventory H-B-7

H-B3 Closure Performance Standards H-B-7

H-B3.1 Clean Closure Levels H-B-7

H-B4 Health and Safety Requirements H-B-8

H-B4.1 Personnel Training Requirements H-B-9
H-B4.2 Security Measures H-B-9
H-B4.3 Inspection Requirements H-B-10

H-B5 Closure Activities H-B-10

H-B5.1 Equipment Removal and Isolation Activities H-B-11
H-B5.1.1 Removal Activities H-B-11
H-B5.1.2 Isolation Activities H-B-11
H-B5.2 Records Review and Visual Inspection H-B-12
H-B5.3 Decontamination H-B-12
H-B5.4 Confirmation of Closure H-B-12

H-B6 Identifying and Managing Waste Generated During Closure H-B-13

H-B6.1 Equipment Removed from Hot Cell G H-B-13
H-B6.2 Oil Drained from Hot Cell G Viewing Windows H-B-13
H-B6.3 Water Collected from Decontamination Activities H-B-13

H-B7 Role of the Independent Qualified Registered Professional Engineer H-B-14

H-B8 Certification of Clean Closure H-B-14

H-B8.1 Conditions that Will Be Achieved When Closure is Complete H-B-14

H-B9 Closure Schedule and Time Frame H-B-15

H-B10 Cost of Closure H-B-16

Figures

Figure H-B1. WESF Dangerous Waste Management Units H-B-2

Figure H-B2. Hot Cell G Windows and Manipulators (June 2001) H-B-3

Figure H-B3. K3N Process Flow Diagram H-B-6

Figure H-B4. WESF Hot Cell G DWMU Closure Schedule Timeline H-B-17

Table

Table H-B1. WESF Hot Cell G DWMU Closure Activities Schedule H-B-15

H-B1 Introduction

This appendix describes closure activities for the Hot Cell G dangerous waste management unit (DWMU), which is part of the Waste Encapsulation and Storage Facility (WESF) Operating Unit Group (OUG).

As a miscellaneous storage unit, the WESF Hot Cell G DWMU must undergo *Resource Conservation and Recovery Act of 1976* (RCRA) clean closure. The term "clean closure" refers to decommissioning of the unit and performing closure activities that result in complete removal of all waste from the unit and complete removal or decontamination of all structures, equipment, debris, environmental media (i.e., soil and groundwater), and other materials affected by releases at or from the unit. This plan describes in detail the closure activities necessary to establish clean closure of the Hot Cell G DWMU, which include removal of equipment/waste; isolation of the Hot Cell G DWMU from the remaining portions of WESF; records review (i.e., capsule storage and operating and inspection documentation) for documented spills or releases of mixed waste; visual inspection of the Hot Cell G DWMU to identify any cracks, holes, or other types of breaches in the high-density concrete structure significant enough to reach underlying soil; decontamination; and visual inspection to confirm that the clean debris surface standard has been achieved. Upon completion of the specified closure activities, the Hot Cell G DWMU clean closure performance standards will be achieved, at which point the unit will be considered closed under RCRA. Once clean closure is achieved, the Hot Cell G DWMU shall remain in place until final disposition of WESF is addressed using *Comprehensive Environmental Response, Compensation, and Liability Act of 1980* (CERCLA) remedial actions correlated to B Plant.

Closure of the Hot Cell G DWMU will be performed in accordance with the closure schedule provided in Section 0. Within 60 days upon completion of closure activities, the Permittees shall provide the Washington State Department of Ecology (Ecology) with a closure certification in accordance with WAC 173-303-610(6), "Dangerous Waste Regulations," "Closure and Post-Closure." The closure certification will provide supportive evidence that the Hot Cell G DWMU has achieved the established clean closure standards.

This closure plan complies with the closure requirements outlined in WAC 173-303-610(2) through WAC 173-303-610(6) and has been developed using historical information, process knowledge, and guidance documents. Amendments to this closure plan will be submitted as a permit modification in accordance with WAC 173-303-610(3)(b) and WAC 173-303-830, "Permit Changes."

Please note, the terms "mixed waste" and/or "waste," when seen in this document, refer to dangerous waste or hazardous waste, as applicable.

H-B2 Hot Cell G Dangerous Waste Management Unit

The following sections provide descriptive information in regards to the physical construction and operation of the Hot Cell G DWMU.

H-B2.1 Unit Description

Hot Cell G is constructed of high-density concrete with inner dimensions of approximately 2 m (8 ft) wide by 4.9 m (16 ft) long by 4.11 m (13.5 ft) high and approximately 89 cm (35 in.) thick walls (Figure H-B1). The floor of the hot cell consists of an approximate 3 cm (1 in.) steel plate across the top of the hot pipe trench, then 0.64 cm (0.25 in.) of lead topped with 17.1 cm (6.75 in.) of high-density concrete, for a total floor thickness of approximately 20 cm (8 in.). The floors and walls are coated with white paint that is resistant to radiation and corrosion. Removable cover blocks, approximately 76 cm (30 in.) thick, top the hot cell and provide access to the canyon through the cell ceiling.

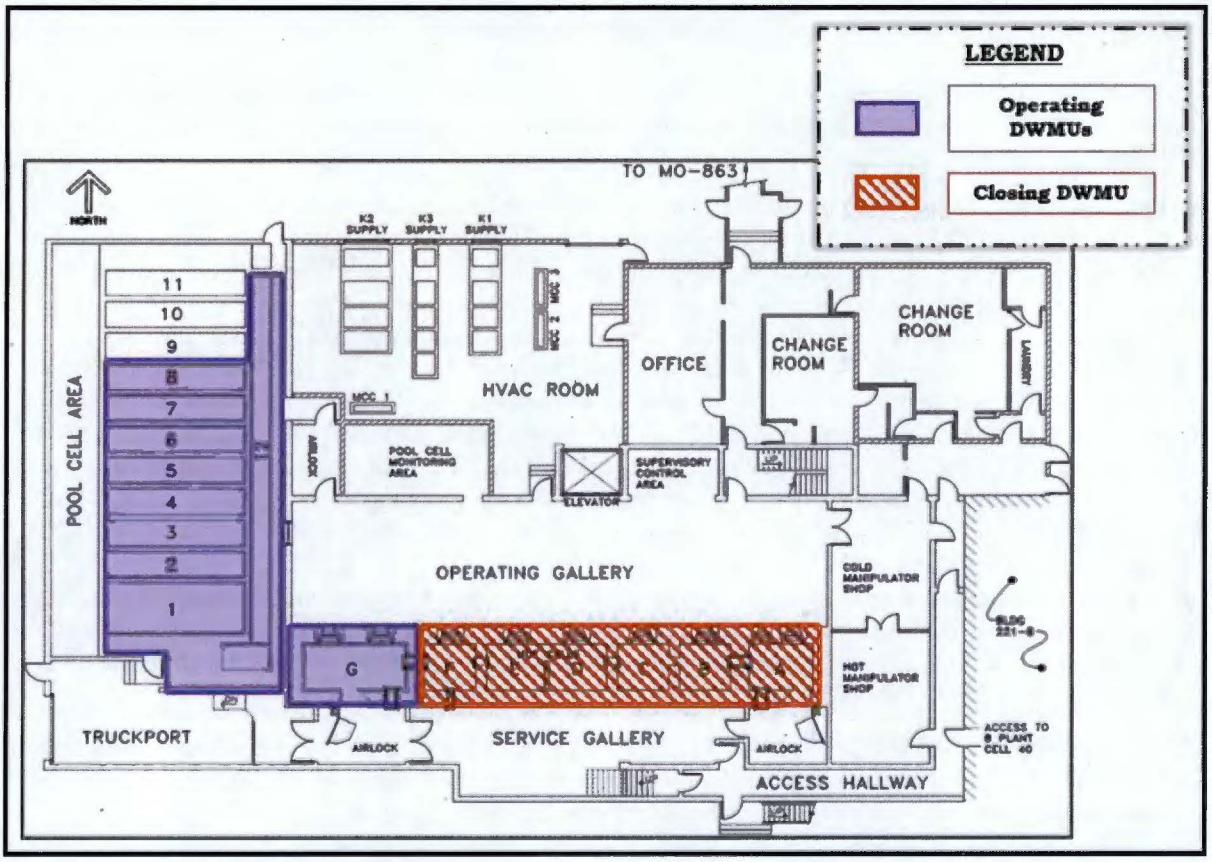

Figure H-B1. WESF Dangerous Waste Management Units

Service piping is embedded in the concrete walls of Hot Cell G. Service piping includes utility services (e.g., air, water, and electricity) that support process equipment operation.

The following subsections provide further information on unit specific features, including equipment, that support Hot Cell G operations.

H-B2.1.1 Sump

An approximate 30 cm (12 in.) wide by 41 cm (16 in.) long by 13 cm (5 in.) open-topped, stainless steel lined sump is recessed in the floor of Hot Cell G next to the east wall. A diaphragm pump was installed during the fall of 1998 to transfer any liquids collected in the sump to the radioactive low-level waste tank (Tank-100). However, as part of the initial closure activities for the Hot Cells A through F DWMU (WESF Addendum H-A, "Hot Cells A through F Dangerous Waste Management Unit Closure Plan," located in Part V, "Closure Units," of WA 7890008967, *Hanford Facility Resource Conservation and Recovery Act Permit* [hereinafter referred to as the Hanford Facility RCRA Permit]), all hot cells (including Hot Cell G) were isolated from this tank.

H-B2.1.2 Pass-Throughs

Hot Cell G has two pass-throughs equipped with shielding doors for passage of small equipment and solid waste. One is located in the east wall of the hot cell leading to Hot Cell F, while the other transfer drawer is located in the south wall of the hot cell and is accessible from the service gallery (Hot Cell G Airlock). The pass-throughs are approximately 36 cm (14 in.) wide by 46 cm (18 in.) high.

As part of the initial closure activities for Hot Cells A through F, the pass-through leading to Hot Cell F was sealed to prevent grout and any potential contamination from flowing into Hot Cell G.

H-B2.1.3 Personnel Entry Door

A shielded personnel entry door, located on the south wall of Hot Cell G, allows personnel access into the hot cell from the Hot Cell G Airlock. The door is approximately 2.3 m (7.4 ft) high by 1.2 m (4 ft) wide and 0.91 m (3 ft) thick, consisting of a steel plate frame filled solid with magnetite concrete. The door weighs approximately 10,251 kg (22,600 lb) and is automatically operated by a hydraulic pneumatic system.

H-B2.1.4 Viewing Windows

Two oil filled, lead glass windows are located on the north wall of Hot Cell G (Figure H-B2). These windows provide for shielding and direct viewing into the hot cell from the operating gallery. The viewing windows are composed of approximately 25 cm (10 in.) of 3.3 g/cm^3 lead glass (hot cell side) and 39.6 cm (15.6 in.) of 6.2 g/cm^3 lead glass (operating gallery side). The oil barrier separating the glass sections allows light to pass through the windows for viewing purposes. The soft lead glass is protected by cerium stabilized, nonbrowning, tempered glass on the hot cell side and tempered glass on the operating gallery side.

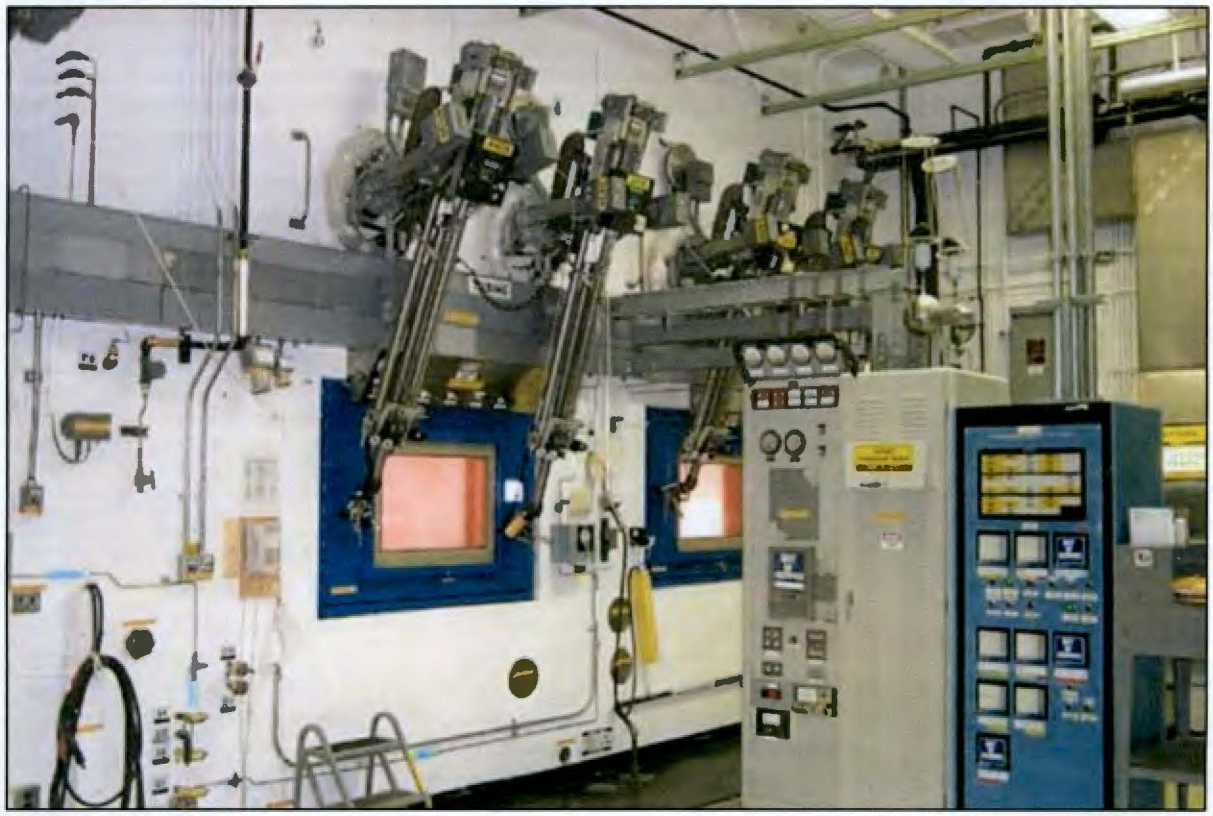

Figure H-B2. Hot Cell G Windows and Manipulators (June 2001)

H-B2.1.5 Manipulators

Hot Cell G has wall ports for four manipulators on the north wall of the cell leading to the operating gallery (two at each Hot Cell G viewing window as shown above in Figure H-B2). The manipulators can be installed or removed from the cell through approximately 25 cm (10 in.) diameter ports in the wall. All four manipulators are currently active and remain functional to support Hot Cell G operations.

Mechanical manipulators are designed to reproduce the natural movements and forces of the human hand and arm. The manipulators are equipped with a flexible booting that fits over the slave tong body and wrist. This booting protects the slave end from gross contamination and the corrosive cell atmosphere, while providing an air barrier between the hot cell and the operating gallery. Manipulators were installed in the hot cells to support encapsulation and maintenance operations, allowing process personnel to work remotely in the hot cell while operating the equipment from the operating gallery, therefore protecting workers from high levels of radiation and contamination.

H-B2.1.6 Transfer Chute

A penetration through the northwestern corner of the Hot Cell G floor leading into Pool Cell 12 provides the capability to transfer capsules between the two areas via a manually operated transfer cart. The capsule transfer chute, which houses the transfer cart, is approximately 14 cm (5.5 in.) in diameter and penetrates through the floor at an angle, extending several inches above the cell floor. The portion of the capsule transfer chute that is above the cell floor has been cut in half to serve as a cradle for the transfer cart and capsule.

H-B2.1.7 G-7 Shielded Storage

G-7 shielded storage can be used to store up to nine failed capsules. The shielded storage lid is operated pneumatically and contains a locking mechanism to prevent inadvertent opening of the lid. The G-7 shielded storage is approximately 81 cm (32 in.) in diameter and 110 cm (42 in.) high, weighs approximately 5,440 kg (12,000 lb), and is located on the floor next to the northern cell wall between the hot cell viewing windows.

H-B2.1.1 Miscellaneous Equipment

Hot Cell G contains a 2 ton capacity hoist that is controlled from the operating gallery. An approximate 0.6 m (2 ft) wide by 0.9 m (3 ft) long by 1 m (4 ft) high inspection table is located in close proximity to the northern cell wall near the west viewing window.

H-B2.1.2 Supporting Systems

The following sections describe the fire protection and K3N ventilation systems that support Hot Cell G operations.

H-B2.1.2.1 Fire Protection System

Hot Cell G is equipped with a manually activated water spray fire protection system that can be actuated from the operating gallery. Raw water supplies the fixed and manipulator directed spray nozzles within the hot cell. Hot Cell G also contains a heat detection system that, when activated, alarms within the building as well as through the fire alarm panel notifying the Hanford Fire Department.

H-B2.1.2.2 K3N Ventilation System

The ventilation system at WESF is designed to produce pressure boundaries that prevent migration from areas with high potential for contamination with radioactive particulates to areas with less potential for contamination to the atmosphere. Areas with high potential for contamination are maintained at a negative pressure with respect to uncontaminated areas, which means air flows from areas of lower potential contamination to areas of higher potential contamination. There are four separate supply systems

and three separate exhaust systems that service the confinement areas at WESF. Hot Cell G is ventilated by the K3N exhaust ventilation system, which also ventilates the canyon as well as Tank-100.

The K3N exhaust fan draws air from the canyon and Hot Cell G, passing it through high-efficiency particulate air (HEPA) filters before it exits through the monitored 296-B-10 stack. The K3N system consists of a filter housing with two redundant exhaust fans. The filter housing includes two HEPA sections in series, with each HEPA section consisting of six individual HEPA filters.

A process flow diagram of the K3N ventilation system is shown in Figure H-B3.

H-B2.2 Operational History

Originally, Hot Cell G was used for final encapsulation and outer capsule inspection. During processing, Hot Cell G was used to weld and inspect the outer capsules, obtain calorimetric data, and perform the radiological release of each capsule prior to transfer and storage in the pool cell area.

Hot Cell G was also used to load capsules in casks for shipment from WESF or unload capsules from casks being returned to WESF. Returned capsules were inspected for damage or defects in the outer capsule, decontaminated with a stainless steel wire brush, and transferred to the pool cells after radiological release for storage.

H-B2.3 Current Operations

The Hot Cell G DWMU remains operational to provide the capability to examine, maintain, and store capsules, as needed, as well as retain the capability for future removal of cesium and strontium capsules from WESF.

H-B2.3.1 Capsule Examinations

Currently, Hot Cell G is used to perform the following various capsule examinations on an as-needed basis:

- Visual examinations
- Go/no-go gauge tests
- Smear tests
- Inner capsule movement tests

H-B2.3.2 Capsule Maintenance

Capsule maintenance activities (e.g., polishing, rescribing, and overpacking) will be performed in Hot Cell G, when deemed necessary.

If at any point a capsule is noted as having an identification number that is not clearly visible, then the outer capsule will be polished with a capsule scrubber or buffer tool and rescribed in Hot Cell G. Hot Cell G will also continue to provide a location for welding and testing should installation of Type W overpacks onto capsules be required.

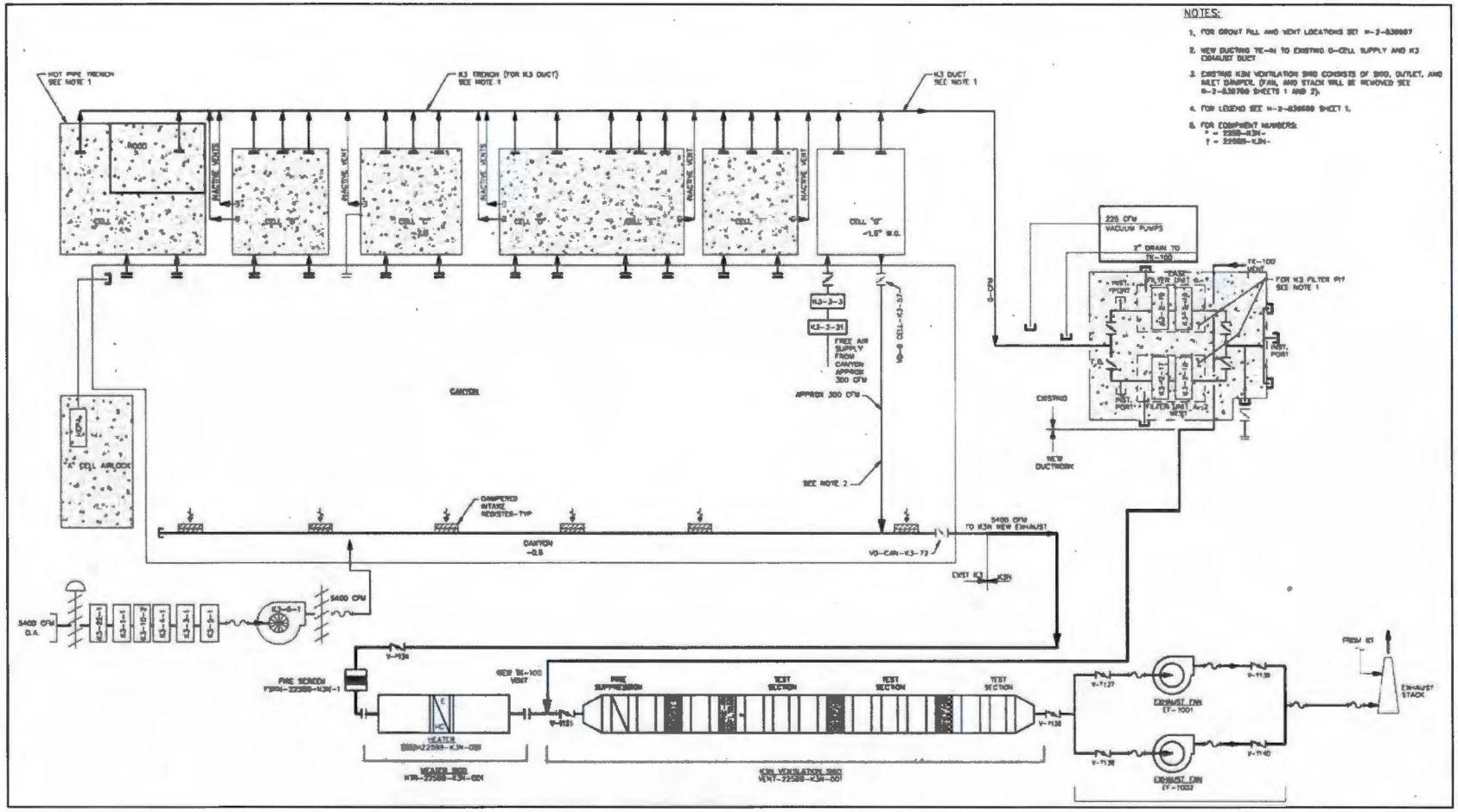

Figure H-B3. K3N Process Flow Diagram

H-B2.3.3 Capsule Storage

Hot Cell G provides a dry storage location for suspect or failed capsules. G-7 shielded storage is preferable for long-term storage of a nonconforming or failed capsule since it provides shielding and, therefore, allows for personnel entry into the hot cell even when capsules are present (Section H-B2.1.7 provides further detail on G-7 shielded storage). A failed capsule may also be placed in a rack or on the inspection table inside of Hot Cell G; however, personnel entry into the hot cell would be restricted while capsules are present in these locations.

Upon discovery of a suspected failed capsule, the capsule would be brought into Hot Cell G for further examination and testing. If it is determined that the capsule has indeed failed, it would then be placed into shielded storage, pending development of a full recovery plan.

H-B2.4 Maximum Waste Inventory

WESF currently stores 1,936 stainless steel capsules containing radioactive cesium chloride and strontium fluoride salts. WESF does not generate products, have any production processes, nor receive mixed waste from another onsite and/or offsite facility.

Hot Cell G primarily functions to support contingency operations in the event of a capsule failure via the preferred method of shielded storage. G-7 shielded storage can hold a maximum of nine capsules, each containing approximately 1 L (0.264 gal) of cesium chloride or strontium fluoride waste; therefore, the maximum waste inventory of the Hot Cell G DWMU is approximately 9 L (2.38 gal).

H-B3 Closure Performance Standards

Closure performance standards for the Hot Cell G DWMU will be based on WAC 173-303-610(2), which, in accordance with WAC 173-303-610(2)(a), requires closure of the facility in a manner that:

1. Minimizes the need for further maintenance (WAC 173-303-610(2)(a)(i)).
2. Controls, minimizes or eliminates to the extent necessary to protect human health and the environment (HHE), post-closure escape of dangerous waste, dangerous constituents, leachate, contaminated runoff, or dangerous waste decomposition products to the ground, surface water, groundwater, or atmosphere (WAC 173-303-610(2)(a)(ii)).
3. Returns the land to the appearance and use of surrounding land areas, to the degree possible, given the nature of the previous dangerous waste activity (WAC 173-303-610(2)(a)(iii)).

Furthermore, clean closure requires removal or decontamination of all dangerous waste, dangerous waste residues, and equipment, bases, liners, soils/subsoils, and other materials containing or contaminated with dangerous waste or dangerous waste residue in accordance with WAC 173-303-610(2)(b).

These closure performance standards are met through and further described in Sections H-B3.1 and H-B5 through H-B5.3.

H-B3.1 Clean Closure Levels

The Hot Cell G DWMU will be clean closed to the performance standards identified in WAC 173-303-610(2)(b)(ii). During closure activities, wastes will be removed from the DWMU which will then be decontaminated in accordance with WAC 173-303-610(5) and clean closed to the clean debris surface standards in accordance with 40 CFR 268.45, "Land Disposal Restrictions," "Treatment Standards for Hazardous Debris," Table 1, "Alternative Treatment Standards for Hazardous Debris."

Under WAC 173-303-610(2)(b)(ii), clean closure standards in this closure plan coordinate with Ecology Publication 94-111, *Guidance for Clean Closure of Dangerous Waste Units and Facilities*, Section 5.0, "Debris," which indicates that hazardous debris must be treated to comply with applicable land disposal restriction (LDR) treatment standards specified in WAC 173-303-140, "Land Disposal Restrictions," which includes, by reference, 40 CFR 268, then ultimately disposed of in an appropriate waste disposal facility. Debris is managed utilizing one of the following three options:

- Debris can be removed from a closing unit and managed as a dangerous waste, treated to comply with applicable LDR treatment standards, and disposed of at an appropriate dangerous waste disposal facility.
- Debris can be managed in special types of units in waste that do not constitute placement in a land disposal unit and, therefore, do not trigger LDR treatment standards.
- Facility owners/operators, generators, and transporters can decontaminate debris and ask Ecology to make a determination that debris does not contain dangerous waste.

The Hot Cell G DWMU will be decontaminated in accordance with LDR treatment standards for hazardous debris established in 40 CFR 268.45, Table 1. Ecology Publication 94-111, Section 5.3.1, "Alternative Treatment Standards for Hazardous Debris," states:

> *"Ecology recognizes that not all materials requiring decontamination during closure will meet the regulatory definition of "hazardous debris" listed in the regulations associated with the Alternative Treatment Standards for Hazardous Debris. For example, materials requiring decontamination during closure may include structures, such as concrete containment systems, that are not intended for disposal. Although these structures will not meet the regulatory definition of "hazardous debris," they require adequate and appropriate decontamination during closure. The Alternative Treatment Standards for Hazardous Debris represent the best demonstrated available technology (BDAT) for materials typically subject to decontamination during closure and, as such, are appropriate minimum clean closure decontamination standards regardless of the regulatory status of the materials in question."*

Decontamination of the Hot Cell G DWMU shall be achieved utilizing the appropriate physical extraction technology as further described in Section H-B5.3. Ecology Publication 94-111, Section 5.1, "Managing Hazardous Debris as Dangerous Waste," states:

> *"Debris treated using one of the established technologies is considered to comply with LDR treatment standards with no further testing needed. In addition, if debris is treated using an approved extraction or destruction technology, it need not be managed as a dangerous waste after treatment..."*

Therefore, upon completion of decontamination activities, clean closure of the Hot Cell G DWMU shall be achieved.

H-B4 Health and Safety Requirements

Closure of the Hot Cell G DWMU will be performed in a manner to ensure the safety of personnel and the surrounding environment by implementing the following personnel training requirements, site security measures, and inspections requirements during the closure period.

H-B4.1 Personnel Training Requirements

Qualified personnel will be trained in and perform all necessary closure activities in compliance with the applicable safety and environmental procedures identified in WESF Addendum G, "Personnel Training." All field operations will be performed in accordance with applicable health and safety requirements. Personnel will be equipped with appropriate personal protective equipment (PPE) for the closure activity being performed.

The Permittees have instituted training and/or qualification programs to meet training requirements imposed by regulations, U.S. Department of Energy (DOE) orders, and national standards such as those published by the American National Standards Institute/American Society of Mechanical Engineers. For example, the environmental, safety, and health training program provides workers with the knowledge and skills necessary to execute assigned duties safely. Attachment 5 to the Hanford Facility RCRA Permit describes specific requirements for the Hanford Facility Personnel Training Program. The Permittees will comply with the WESF Training Matrix, located in Table G-1 of WESF Addendum G, which provides training requirements for Hanford Facility personnel associated with closure activities for the Hot Cell G DWMU.

Project-specific safety training will include knowledge and skills necessary for personnel to perform work safely and in accordance with quality assurance requirements. Pre-job briefings will be performed to evaluate daily activities and associated hazards by considering the following factors:

- Objective of the activities
- Individual tasks to be performed
- Hazards associated with the planned tasks
- Environment in which the job will be performed
- Facility where the job will be performed
- Equipment and material required
- Safety protocols applicable to the job, including PPE requirements
- Training requirements for individuals assigned to perform the work
- Level of management control
- Emergency contacts

Training records are maintained for each employee in an electronic database. The Permittees' training organization maintains the training records system.

H-B4.2 Security Measures

The Hot Cell G DWMU is located inside the 225-B Building and is not accessible for unknowing or unauthorized entry by persons or livestock. The building is protected by locked doors with posted danger signs. Vehicular access to roads leading to the DWMU area is controlled through the Hanford Facility 24-hour controlled access points, which are posted with restrictive signage (Hanford Facility RCRA Permit Attachment 3, "Security"). Collaboratively, these measures help ensure that only authorized personnel will be allowed in the area. Additional measures may be taken to restrict unauthorized access during the closure period, if deemed necessary.

H-B4.3 Inspection Requirements

During the closure period, to prevent threats to HHE, the Hot Cell G DWMU will be inspected in accordance with WAC 173-303-320, "General Inspection," requirements.

Two visual inspections of the Hot Cell G DWMU will be conducted during closure. One visual inspection will be performed upon completion of the initial closure activity consisting of equipment removal and isolation activities. This visual inspection is necessary to determine the extent of any releases at or from the DWMU that could potentially impact the surrounding environment. The other visual inspection will be performed subsequently to decontamination activities. This visual inspection is necessary to verify that the Hot Cell G DWMU meets the clean debris surface standard, thereby confirming that RCRA clean closure has been achieved. Further details on the Hot Cell G visual inspections are provided in Sections H-B5.2 and H-B5.4.

Furthermore, the Hot Cell G DWMU will be inspected annually until the clean closure certification is accepted by Ecology. This inspection will verify the following conditions:

- Posted danger signs at each entrance to the OUG are present, written in English, visible from all angles of approach, and legible from a distance of at least 7.6 m (25 ft).
- No evidence of unusual conditions exists at the closing DWMU site.

Inspection documentation must include, at a minimum, the date and time of inspection, observations, date and nature of corrective actions taken (if any), and printed name/signature of inspection personnel. Corrective actions taken as a result of inspections must be remedied on a schedule that prevents hazards to HHE. Inspection documentation must be maintained in the WESF portion of the facility operating record for a minimum of five years after Ecology clean closure acceptance.

H-B5 Closure Activities

As a permitted miscellaneous unit for storage, this DWMU is a candidate for clean closure under RCRA. Clean closure determinations for the Hot Cell G DWMU will be based on successful completion of the closure activities outlined in this section.

The following closure activities, listed in sequential order, are required to achieve clean closure of the Hot Cell G DWMU:

- Equipment removal and isolation activities
- Records review and visual inspection
- Decontamination
- Confirmation of closure

Upon achieving clean closure, the Hot Cell G DWMU will remain in place until final disposition of WESF is addressed using CERCLA remedial actions correlated to B Plant.

H-B5.1 Equipment Removal and Isolation Activities

Prior to decontaminating the Hot Cell G DWMU, all equipment and waste remaining in the hot cell will need to be removed and/or isolated, as applicable.

H-B5.1.1 Removal Activities

The following equipment will be removed from the Hot Cell G DWMU:

- Manipulators
- Oil within the two hot cell viewing windows
- Other miscellaneous equipment (i.e., tools and PPE) or components

All other equipment in Hot Cell G will remain in place; however, if deemed necessary, other Hot Cell G equipment may be removed. All equipment that is removed will be managed in accordance with Section H-B5.1.1.1.

H-B5.1.1.1 Removal of Wastes and Waste Residues

All equipment that is removed from Hot Cell G (as identified in Section 0) will be managed in accordance with WAC 173-303 and WESF waste management practices. The waste will be designated (if necessary) and shipped to an approved facility for treatment, storage, and/or disposal (TSD).

Waste containers meeting U.S. Department of Transportation (DOT) requirements will be packaged and shipped in accordance with 49 CFR, "Transportation," criteria. Waste packaged in non-DOT regulation (large or irregular shaped) containers will be shipped in accordance with DOE/RL-2001-36, *Hanford Sitewide Transportation Safety Document*. Transportation by highway will be the primary means of shipping waste; however, waste may also be shipped by air or rail.

Waste will be treated (if necessary) to meet LDR treatment standards specified in WAC 173-303-140, which includes by reference 40 CFR 268, then ultimately disposed of in an appropriate waste disposal facility.

While waste residues are not anticipated, if waste residues are found during clean closure activities, they will be managed in accordance with all applicable requirements of WAC 173-303-170, "Requirements for Generators of Dangerous Waste," through WAC 173-303-230, "Special Conditions." Waste subject to LDR requirements of WAC 173-303-140, which includes by reference 40 CFR 268, will be characterized, designated, stored, and/or treated, as applicable, prior to disposal in an approved waste disposal facility.

H-B5.1.2 Isolation Activities

Prior to decontamination, Hot Cell G needs to be isolated from all other areas of the 225-B Building to ensure that any potential contamination remaining within the hot cell (i.e., hazardous debris) does not spread outside of the DWMU during decontamination activities. Numerous penetrations through the hot cell floor and walls must be sealed in order to isolate the DWMU. A combination of cover plates and mastic material will be employed for this purpose. Isolation of the Hot Cell G DWMU will include the following activities:

- Isolate all utility lines that remain connected to the hot cell. Utilities include air, water, and electrical services.
- Install cover plates over and/or seal hot cell penetrations, such as the transfer chute, manipulator ports, and service piping penetrations.

H-B5.2 Records Review and Visual Inspection

WESF capsule storage, operating, inspection, and spill records will be reviewed for documented spills or potential releases of dangerous waste within the Hot Cell G DWMU. A visual inspection will then be performed to determine and document the presence of any cracks, holes, or other breaches in the high-density concrete structure, sufficient to reach the underlying soil.

Collaborative results of the records review and visual inspection will be used to determine if dangerous waste or dangerous waste constituents could have been released to the environment.

Visual inspection of the Hot Cell G DWMU will be performed and documented in accordance with the requirements of WAC 173-303-320 and shall include, at a minimum, the following information:

- Date, time, and location of inspection
- Observations made during inspection
- Locations, dimensions, and photographs of all cracks, holes, or other breaches in the high-density concrete structure (if any)
- Corrective actions (if any) to prevent further contamination
- Name/signature of inspection personnel

Inspection documentation must be maintained in the WESF facility operating record for a minimum of five years after Ecology clean closure acceptance. Corrective actions taken as a result of the visual inspection must be remedied on a schedule that prevents hazards to HHE.

H-B5.3 Decontamination

As previously mentioned in Section H-B3.1, decontamination of the Hot Cell G DWMU shall be achieved utilizing the appropriate physical extraction technology listed in Table 1 of 40 CFR 268.45. High pressure steam and/or water spray treatment will achieve an adequate level of decontamination due to the extremely low potential for contamination and/or hazardous debris remaining within the Hot Cell G DWMU boundary and is, therefore, the appropriate treatment technology to achieve the clean debris surface standard.

Water or steam sprays of sufficient temperature, pressure, residence time, agitation, surfactants, and detergents, as applicable, will be applied to remove any potential hazardous contaminants from the debris surface or surface layers. Water generated from decontamination activities will be managed in accordance with Section H-B6.3.

H-B5.4 Confirmation of Closure

Upon completion of decontamination activities, the Hot Cell G DWMU will need to be visually inspected to verify that the clean debris surface standard has been achieved. The term "clean debris surface" (as defined in 40 CFR 268.45, Table 1, footnote 3) means that the surface, when viewed without magnification, shall be free of all visible contaminated soil and hazardous waste except that residual staining from soil and waste consisting of light shadows, slight streaks, or minor discolorations. Soil and waste in cracks, crevices, and pits may be present provided that such soil and waste, as well as any staining, is limited to no more than 5 percent of each square inch of surface area.

To date, there has not been a documented spill or release of capsule contents. The previous closure activity regarding records review will be used to determine whether or not a spill or release of mixed waste has occurred over the lifespan of the WESF OUG. Even if the records review confirms that no spills or releases have occurred, a visual inspection of the Hot Cell G DWMU will be performed to confirm that no waste residues remain after decontamination activities are complete. The visual inspection will be documented in accordance with the requirements of WAC 173-303-320 and shall include, at a minimum, the following information:

- Date, time, and location of inspection
- Observations made during inspection
- Locations, dimensions, and photographs of residual staining (if any)
- Corrective actions (if any)
- Name/signature of inspection personnel

Inspection documentation must be maintained in the WESF facility operating record for a minimum of five years after Ecology clean closure acceptance. Corrective actions taken as a result of the visual inspection must be remedied on a schedule that prevents hazards to HHE.

Once it has been determined that the clean debris surface standard has been met, the Hot Cell G DWMU shall have achieved clean closure under RCRA.

H-B6 Identifying and Managing Waste Generated During Closure

Closure activities for the Hot Cell G DWMU could potentially result in generation of the following three waste streams requiring proper management and disposal: equipment removed from Hot Cell G, oil drained from Hot Cell G viewing windows, and water collected from decontamination activities.

H-B6.1 Equipment Removed from Hot Cell G

Equipment, including manipulators and PPE, will be removed as necessary prior to decontamination activities. Such equipment will be managed as newly generated waste as previously mentioned in Section H-B5.1.1.1.

H-B6.2 Oil Drained from Hot Cell G Viewing Windows

The oil between the panes of glass in each viewing window will be drained and collected in pre-approved containers. The total volume of oil between the panes of glass in each window is approximately 30 L (8 gal); therefore, approximately 60 L (16 gal) of oil will be drained from to two Hot Cell G viewing windows. The oil between the glass sections is a white mineral oil (Chemical Abstracts Service Number 8042-47-5) with no hazardous properties; therefore, it will be managed as nondangerous maintenance waste and disposed of at an approved disposal facility.

H-B6.3 Water Collected from Decontamination Activities

Water used to decontaminate the Hot Cell G DWMU will be collected in the corresponding sump and subsequently containerized. The collected water is anticipated to be nondangerous and is considered a newly generated solid waste stream. Until confirmation of the nondangerous waste designation, waste must be handled in accordance with all applicable requirements of WAC 173-303-170 through WAC 173-303-230. The waste will be labeled, characterized in accordance with requirements in

WAC 173-303-070, "Designation of Dangerous Waste," stored, transported to, and disposed of at an approved disposal facility.

H-B7 Role of the Independent Qualified Registered Professional Engineer

An Independent Qualified Registered Professional Engineer (IQRPE) will be retained to provide certification of closure, as required by WAC 173-303-610(6). The IQRPE will be responsible for observing field activities and reviewing documents associated with closure of the Hot Cell G DWMU. At minimum, the following activities will be performed by the IQRPE:

- Observation and/or review of equipment/waste removal and disposition records
- Observation and/or review of the Hot Cell G DWMU visual inspection
- Observation and/or review of decontamination activities
- Observation and/or review of newly generated waste management and disposition records
- Verification that closure activities were performed in accordance with this closure plan

The IQRPE will record observations and reviews in a written report that will be retained in the WESF portion of the operating record. The resulting report will be used to develop the clean closure certification of the Hot Cell G DWMU, which will then be provided to Ecology.

H-B8 Certification of Clean Closure

In accordance with WAC 173-303-610(6), within 60 days of completion of closure of the Hot Cell G DWMU, certification that the DWMU has been closed in accordance with the specifications in this closure plan will be submitted to Ecology by registered mail or other means that establishes proof of receipt (including applicable electronic means). The certification will be signed by the owner or operator, and signed and stamped by an IQRPE.

Upon request by Ecology, the following information will be submitted to support closure certification:

- All field notes and photographs relative to closure activities
- Description and justification of any minor deviations from the approved closure plan
- Documentation of the final disposition of all dangerous wastes and dangerous waste residues (if any)
- Verification that all closure activities were performed in accordance with the approved closure plan
- Description of the DWMU area upon completion of closure

H-B8.1 Conditions that Will Be Achieved When Closure is Complete

Upon completion of the closure activities outlined within this closure plan, the Hot Cell G DWMU will be decontaminated to a clean debris surface standard and considered clean closed under RCRA. Once the entire WESF OUG has achieved RCRA clean closure, the OUG will be removed from the Hanford Facility RCRA Permit; however, WESF will be subject to future remedial action under CERCLA in conjunction with the established record of decision for B Plant. The WESF OUG shall remain in place until such time.

H-B9 Closure Schedule and Time Frame

Closure activities for the Hot Cell G DWMU, as well as the anticipated duration for each activity, are outlined in Table H-B1 and Figure H-B3. In accordance with WAC 173-303-610(4)(b), closure activities for the Hot Cell G DWMU will be completed no more than 180 days after the start of closure. Should unexpected circumstances arise and an extension to the 180 day closure activity period be deemed necessary, a permit modification will be submitted to Ecology for approval at least 30 days prior to expiration of the 180 day closure activity period in accordance with WAC 173-303-610(4)(c) and WAC 173-303-830, Appendix I, Section D.1.b. The extension request would also demonstrate that all steps to prevent threats to HHE, including compliance with all applicable permit requirements, have been and will continue to be taken.

Within 60 days following completion of closure activities outlined in this closure plan, a closure certification will be submitted to Ecology as outlined in Section H-B8.

Table H-B1. WESF Hot Cell G DWMU Closure Activities Schedule

Closure Activity Description		
Primary Activity	**Description of Activity**	**Duration**
Prior To Closure		
Submit Notification to Ecology of Intent to Close the Hot Cell G DWMU	In accordance with WAC 173-303-610(3)(c)(i), at least 45 days prior to the date on which closure is expected to begin.	--
Begin Closure of the Hot Cell G DWMU	Once all of the cesium and strontium capsules are removed from WESF, closure of the Hot Cell G DWMU will commence.	Day 0
Closure Activities		
Isolation and/or Removal of Equipment/Waste	Isolate and/or remove equipment and waste, as applicable. Package and ship waste to an approved facility for treatment, storage, and/or disposal.	90 Days (Day 90)
Records Review	Perform review of capsule storage, operating, inspection, and spill records. (Note: Records review will be performed concurrently with previous closure activity)	90 Days (Day 90)
Visual Inspection of the Hot Cell G DWMU	Inspect structural integrity (visible aspects only) for any cracks, holes, or other breaches in the high-density concrete structure.	10 Days (Day 100)
	Document visual inspection: Include photos, locations, and dimensions of cracks, holes, or other breaches in the Hot Cell G structure (if any).	
Decontamination	Apply high pressure steam and/or water to remove any potentially remaining hazardous contaminants.	60 Days (Day 160)
Confirmation of Closure	Visually inspect Hot Cell G DWMU to verify that the clean debris surface standard has been achieved.	10 Days (Day 170)

Table H-B1. WESF Hot Cell G DWMU Closure Activities Schedule

Closure Activity Description		
	Document visual inspection: Include photos, locations, and dimensions of residual staining or waste remaining in cracks, crevices, or pits (if any) to verify that such staining and/or waste remaining is limited to 5% of each square inch of surface area.	
RCRA Closure Activities Complete*		
Owner/Operators and IQRPE Submit Clean Closure Certification	In accordance with WAC 173-303-610(6), within 60 days of completion of closure a certification that the DWMU has been closed in accordance with the specifications in the approved closure plan will be submitted to Ecology.	60 Days (Day 230)

* RCRA clean closure achieved. DWMU shall remain in place until future remedial action takes place under CERCLA.

H-B10 Cost of Closure

An annual cost estimate outlining updated projections of anticipated closure costs for the Hanford Facility TSD units having final status is not required per Permit Condition II.H. The Hanford Facility is owned by DOE and operated by DOE and its contractors; therefore, in accordance with WAC 173-303-620(1)(c), "Financial Requirements," the provisions of WAC 173-303-620, are not applicable to the Hanford Facility.

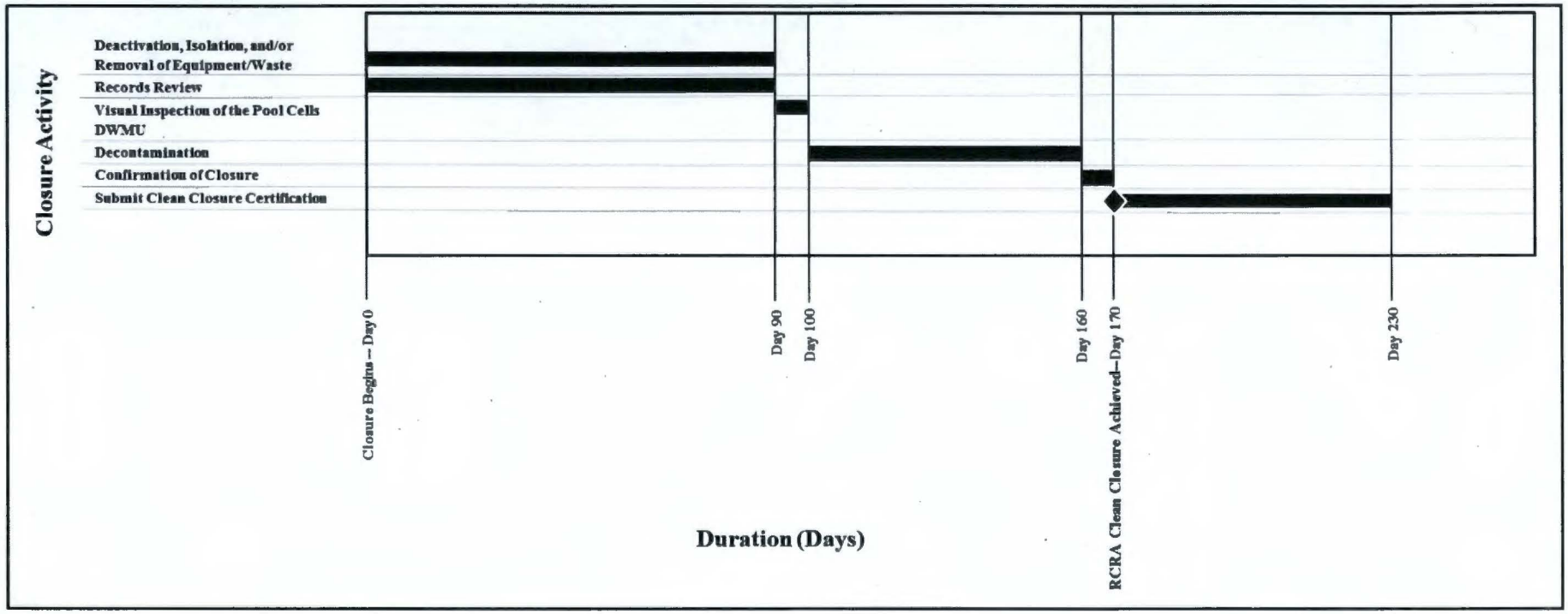

Figure H-B4. WESF Hot Cell G DWMU Closure Schedule Timeline

This page intentionally left blank.

Addendum I

Inspection Plan

This page intentionally left blank.

Contents

I1 Inspection Plan I-1

I1.1 General Inspection Requirements I-1

I1.1.1 Inspection Requirements and Types of Potential Problems I-1

I1.1.2 Frequency of Inspections I-3

I1.1.3 Inspection Log I-3

I1.1.4 Schedule for Remedial Action for Problems Revealed During Inspections I-4

Table

Table I-1. WESF Inspection Schedule I-2

This page intentionally left blank.

I1 Inspection Plan

This addendum describes the method(s) and schedule for inspections of the Waste Encapsulation and Storage Facility (WESF) Operating Unit Group waste storage areas and, furthermore, complies with the requirements set forth in WAC 173-303-320, "Dangerous Waste Regulations," "General Inspection."

WESF is located in the northwestern portion of the 200 East Area of the Hanford Facility, with the main 225-B Building adjoining B Plant on the west end. The 225-B Building houses the WESF dangerous waste management units (DWMUs), two of which are operating: Hot Cell G and Pool Cells.

WESF operations provide for continued safe storage and maintenance of the 1,936 capsules containing cesium and strontium mixed waste. The double-encapsulated cesium and strontium salts are stored underwater in various pool cells located in the western portion of the 225-B Building. WESF storage operations are designed to protect human health and the environment from the encapsulated mixed waste.

For further details on WESF DWMUs and storage operations, refer to WESF Addendum C, "Process Information."

Routine inspections are conducted at WESF to detect signs of equipment deterioration and prevent malfunctions that would cause a release of mixed waste to the environment or pose a threat to human health. Abnormal conditions and/or deficiencies identified by inspections will be corrected on a schedule that prevents hazards to personnel, the public, and the environment in accordance with the requirements of WAC 173-303-320(3).

Please note, the terms "mixed waste" and/or "waste", when seen in this document, refer to dangerous waste or hazardous waste, as applicable.

I1.1 General Inspection Requirements

The content and frequency of inspections are described in this subsection as well as Table I-1. A copy of the WESF inspection schedule will be maintained at the facility as required by WAC 173-303-320(2)(a). WESF inspections will be conducted by qualified individuals trained in accordance with WESF Addendum G, "Personnel Training," to inspect WESF waste storage areas.

I1.1.1 Inspection Requirements and Types of Potential Problems

Inspections are conducted to detect any signs of malfunction, deterioration, discharges, or other anomalies. Refer to Table I-1 for the types of problems looked for during an inspection. WESF inspections include, but are not limited to, the following key components:

- Pool cell beta monitoring system
- Security devices
- Safety and emergency equipment
- 225-B Building

Table I-1. WESF Inspection Schedule

Requirement Description	Inspection Frequency[a]	Types of Potential Problems
Pool Cell Beta Monitoring System:		
Data from Leak Detection Equipment Monitors (i.e., leakage of the capsules, ***NOT*** pool cell water)	Daily[b]	Verify that beta monitors and associated alarms are functional.
Security Devices:		
Posted Danger Signs	Annually	Verify that signs are posted and legible.
Safety and Emergency Equipment:		
225-B Automatic Sprinkler System – *Valves and Riser Pressure Gauges*	Monthly	Equipment is in good condition, valve seals are intact, and water pressure is available.
225-B Automatic Sprinkler System – *Valve Functional Test*	Annual	Verify that valves and associated alarms are functional.
Fire Extinguishers	Monthly	Equipment is present and in good physical condition, and seal is intact.
Emergency Lighting	Monthly	Verify that equipment is present and functional.
Communications Equipment [c]	Annually	Equipment is present and operating.
Safety Shower	Monthly	Equipment is present and functional.
Eyewash Stations (portable)	Semi Annually	Equipment is present and functional.
225-B Building:		
Exterior Surfaces and Surrounding Area	Annually	Check for structural damage to the building. Check outside the building for liquid accumulation or signs of hazardous waste releases.

Reference: WAC 173-303-320, "Dangerous Waste Regulations," "General Inspection."

a. Inspections will be performed on working days (not including holidays, weekends, or back shifts). Inspection frequencies include daily – once per calendar day, monthly – once per calendar month, semi annually – once per every six calendar months, and annually – once per calendar year.

b. To implement WAC 173-303-320(2)(c), the inspection requirement for the pool cell beta monitoring system is "daily when in use" and, therefore, is only required for pool cells actively storing mixed waste capsules.

c. Communications equipment includes two-way radios, public address system, and evacuation and take cover alarms.

I1.1.1.1 Pool Cell Beta Monitoring System

The deionized water in the pool cells actively storing mixed waste capsules is continuously monitored for the presence of cesium and/or strontium. The pool cell beta monitors and associated alarms will be monitored daily to ensure that a capsule has not malfunctioned (leaked). Pool cell beta monitors can be used for capsule leak detection since the dangerous and radioactive components of mixed waste are inseparable; therefore, a release of dangerous waste or dangerous waste constituents that does not exhibit radioactivity is not possible.

The beta monitoring system is periodically inspected to verify that the system and associated alarms are functional, and instrumentation readings are within the proper limits.

I1.1.1.2 Security Devices

Posted danger signs are inspected to verify that the signs are posted and legible. Posted signage is consistent with the requirements outlined in WESF Addendum E, "Security."

I1.1.1.3 Safety and Emergency Equipment

Safety and emergency equipment is inspected to verify that the equipment is present, in good condition, and functional. The WESF inspection schedule includes pertinent safety and emergency equipment identified in WESF Addendum J, "Contingency Plan," and Addendum F, "Preparedness and Prevention."

I1.1.1.4 225-B Building

The 225-B Building, which houses the WESF DWMUs, will be inspected on an annual basis. This inspection will include a walkdown of the outside of the 225-B Building, with emphasis on the pool cell portion of the facility. The inspector will check for signs of structural damage or deterioration (i.e., subsidence around the foundation, unusual settling, or major cracks in the structure) of the building that may cause, or could potentially lead to, the release of mixed waste to the environment or threat to human health. The surrounding area will also be inspected to check for liquid accumulation or signs of release of hazardous waste.

I1.1.2 Frequency of Inspections

The frequency of WESF inspections is based on the rate of possible deterioration of equipment, and probability of an environmental or human health incident (WAC 173-303-320(2)(c)) and is, furthermore, identified in Table I-1.

Due to the highly radioactive nature of the mixed waste capsules, weekly inspection of the capsules (in accordance with WAC 173-303-630(6), "Use and Management of Containers") is not feasible to keep radiation exposures as low as reasonably possible and would increase the risk for potential capsule damage/failure. The cesium and strontium salts are contained in double-walled capsules that have been designed, welded, undergone various performance tests, and stored in a manner to ensure that capsule integrity is maintained (see WESF Addendum C for further information on WESF capsule properties and storage operations).

Even though a capsule leak is highly unlikely, the pool cell beta monitors for pool cells actively storing mixed waste capsules are inspected daily. The pool cell beta monitoring system inspection frequency satisfies the WAC 173-303-630(6) requirement to inspect areas where containers are stored at least weekly since any detection of beta radiation would indicate that a container is leaking or deteriorating.

I1.1.3 Inspection Log

Inspections, implemented through operating requirements, will be documented on inspection checklists and/or log sheets in accordance with WAC 173-303-320(2)(d). Inspection checklists and/or log sheets will note the date and time of which the inspection began, and the items that will be assessed during each inspection. Any problems or discrepancies identified during the inspection are recorded on the inspection checklist and/or log sheet, reported to the operating organizations, and prioritized and addressed in a timely fashion as described in Section I1.1.4.

When the inspection is completed, the inspector prints their name and signs the inspection checklist and/or log sheet. The schedule and inspection records will be maintained, retained, and stored in the Hanford Facility Operating Record (WESF portion) in accordance with WA7890008967, *Hanford Facility Resource Conservation and Recovery Act Permit* (hereinafter referred to as Hanford Facility

RCRA Permit), Condition II.I, which complies with the record retention requirements set forth in WAC 173-303-320(2)(d) and WAC 173-303-380(1)(e), "Facility Recordkeeping."

I1.1.4 Schedule for Remedial Action for Problems Revealed During Inspections

In accordance with Hanford Facility RCRA Permit Condition II.O.2 (WAC 173-303-320(3)), the WESF operating organization will remedy any problems or discrepancies revealed by the inspection on a schedule that prevents hazards to human health and the environment. Where a hazard is imminent or has already occurred, immediate action will be taken, including activation of WESF Addendum J when required, as defined in Hanford Facility RCRA Permit Condition II.A.

Addendum J

Contingency Plan

This page intentionally left blank.

Contents

J1 Contingency Plan J-1

Appendix

J-A Building Emergency Plan for WESF ..... J-A-i

This page intentionally left blank.

J1 Contingency Plan

WAC 173-303, "Dangerous Waste Regulations," requirements for a contingency plan at the Waste Encapsulation and Storage Facility (WESF) Operating Unit Group (OUG) are satisfied in portions of WA7890008967, *Hanford Facility Resource Conservation and Recovery Act Permit* (hereinafter referred to as the Hanford Facility RCRA Permit) Attachment 4 (DOE/RL-94-02, *Hanford Emergency Management Plan*) and this addendum.

The Hanford Facility emergency management program is based on a graded approach for responses to emergency events using OUG-specific and/or Hanford Facility level emergency procedures. This addendum contains the building emergency plan (BEP) for WESF in Appendix J-A. The WESF BEP contains a description of WESF OUG-specific planning and response, which is used in conjunction with the Hanford Facility RCRA Permit Attachment 4 to meet the requirements for a contingency plan.

This page intentionally left blank.

Appendix J-A

Building Emergency Plan for WESF

This page intentionally left blank.

1

CHPRC ADMINISTRATIVE DOCUMENT PROCESSING AND APPROVAL

DOCUMENT TITLE:	**OWNING ORGANIZATION/FACILITY:**
Building Emergency Plan for the Waste Encapsulation Storage Facility	Waste and Fuels Management Project/WESF

Document Number: HNF-IP-0263-WESF **Revision/Change Number:** 13

DOCUMENT TYPE *(Check Applicable)* [x] Plan [ ] Report [ ] Study [ ] Description Document [ ] Other

DOCUMENT ACTION *(Check One)* [ ] New [x] Revision [ ] Cancellation

RESPONSIBLE CONTACTS

	Name	Phone Number
Author:	Cecilia Rocha	942-3925
Manager:	Eric Kinnunen	373-9059

DOCUMENT CONTROL

Is the document intended to be controlled within the Document Management Control System (DMCS)?	[x] Yes [ ] No
Does document contain Scientific and Technical Information (STI) intended for public use?	[x] Yes [ ] No
Does document contain Controlled Unclassified Information (CUI)?	[ ] Yes [x] No

DOCUMENT REVISION SUMMARY

NOTE: Provide a brief description or summary of the changes for the document listed.

Changes to the list of emergency response equipment.

REVIEWERS Others

Name *(print)*	Organization
Rick Wilbanks	WESF Facility Manager
Dave Watson	ECO

APPROVAL SIGNATURES

	Print Name	Signature	Date
Author:	Cecilia Rocha	[signature]	04/27/16
Responsible Manager:	Eric Kinnunen	[signature]	04/27/16
Other:			

RELEASE / ISSUE

DATE: Apr 28, 2016

HANFORD RELEASE

A-6005-184 (REV 6)

Date Received for Clearance Process (MM/DD/YYYY)
04/27/2016

INFORMATION CLEARANCE FORM

A. Information Category

- [ ] Abstract
- [ ] Journal Article
- [ ] Summary
- [ ] Internet
- [ ] Visual Aid
- [ ] Software
- [ ] Full Paper
- [ ] Report
- [x] Other Plan

B. Document Number HNF-IP-0263-WESF Revision 13

C. Title
Building Emergency Plan for the Waste Encapsulation Storage Facility

D. Proposed Internet Address

E. Required Information (MANDATORY)

1. Is document potentially Classified? (●) No ( ) Yes

Kinnunen, Eric P
Manager Required (Print and Sign)

If Yes
ADC Required (Print and Sign) ( ) No ( ) Yes Classified

2. Official Use Only (●) No ( ) Yes Exemption No. ____
3. Export Controlled Information (●) No ( ) Yes OUO Exemption No. 3
4. UCNI (●) No ( ) Yes
5. Applied Technology (●) No ( ) Yes OUO Exemption No. 5
6. Other (Specify) ____

7. Does Information Contain the Following:

a. New or Novel (Patentable) Subject Matter? (●) No ( ) Yes
If "Yes", OUO Exemption No. 3
If "Yes", Disclosure No.: ____

b. Commercial Proprietary Information Received in Confidence, Such as Proprietary and/or Inventions?
(●) No ( ) Yes If "Yes", OUO Exemption No. 4

c. Corporate Privileged Information? (●) No ( ) Yes
If "Yes", OUO Exemption No. 4

d. Government Privileged Information? (●) No ( ) Yes
If "Yes", Exemption No. 5

e. Copyrights? (●) No ( ) Yes If "Yes", Attach Permission.

f. Trademarks? (●) No ( ) Yes If "Yes", Identify in Document.

8. Is information requiring submission to OSTI? (●) No ( ) Yes
9. Release Level? (●) Public ( ) Limited

F. Complete for a Journal Article

1. Title of Journal

G. Complete for a Presentation

1. Title for Conference or Meeting ____
2. Group Sponsoring ____
3. Date of Conference ____
4. City/State ____
5. Will Information be Published in Proceedings? (●) No ( ) Yes
6. Will Material be Handed Out? (●) No ( ) Yes

H. Information Owner/Author/Requestor
Rocha, Cecilia A
(Print and Sign)

Responsible Manager
Kinnunen, Eric P
(Print and Sign)

Approval by Direct Report to President (Speech/Articles Only) ____
(Print and Sign)

I. Reviewers	Yes	Print	Signature	Public Y/N (If N, complete J)
General Counsel	[ ]			Y / N
Office of External Affairs	[ ]			Y / N
DOE	[ ]			Y / N
Other	[ ]			Y / N
Other	[ ]			Y / N
Other	[ ]			Y / N

J. Comments

Information Clearance Approval
APPROVED
By G. E. Bratton at 8:01 am, Apr 28, 2016

Approved for Public Release; Further Dissemination Unlimited

If Additional Comments, Please Attach Separate Sheet

A-6001-401 (REV 5)

HNF-IP-0263-WESF
Revision 13

Building Emergency Plan for the Waste Encapsulation Storage Facility

Prepared for the U.S. Department of Energy
Assistant Secretary for Environmental Management

Contractor for the U.S. Department of Energy
under Contract DE-AC06-08RL14788

P.O. Box 1600
Richland, Washington 99352

Approved for Public Release;
Further Dissemination Unlimited

HNF-IP-0263-WESF
Revision 13

Building Emergency Plan for the Waste Encapsulation Storage Facility

Document Type: PLAN Program/Project: WASTE AND FUELS MANAGEMENT PROJECT/WESF

C. A. Rocha
CH2M HILL Plateau Remediation Company

Date Published
April 2016

Prepared for the U.S. Department of Energy
Assistant Secretary for Environmental Management

Contractor for the U.S. Department of Energy
under Contract DE-AC06-08RL14788

P.O. Box 1600
Richland, Washington 99352

APPROVED
By G. E. Bratton at 8:01 am, Apr 28, 2016

Release Approval Date

Approved for Public Release;
Further Dissemination Unlimited

TRADEMARK DISCLAIMER

Reference herein to any specific commercial product, process, or service by tradename, trademark, manufacturer, or otherwise, does not necessarily constitute or imply its endorsement, recommendation, or favoring by the United States Government or any agency thereof or its contractors or subcontractors.

This report has been reproduced from the best available copy.

Printed in the United States of America

WASTE AND FUELS MANAGEMENT PROJECT	Document:	HNF-IP-0263-WESF
	Revision	13
BUILDING EMERGENCY PLAN	Page:	1 of 29
WASTE ENCAPSULATION STORAGE FACILITY	Effective Date:	April 30, 2016

This plan covers the following buildings and structures: 211BA, 225B, 225BA, 225BB, 225BC, 225BD, 225BE, 225BF, 225BG, 226B, 272B, 272BA, 272BB, 282B, 282BA, 296B10, 294B, MO133, MO134, MO232, MO312, MO2237, MO400, MO408 and MO410.

USQ #: WESF - 16 - 099

Screened by: LI Covey

Approved:

RG Wilbanks
Facility Manager

4-27-16
Date

DJ Watson
Environmental Compliance Officer

4-27-2016
Date

EP Kinnunen
CHPRC Emergency Preparedness

04/27/16
Date

This document will be reviewed at least annually and updated if necessary by Facility Management unless Hanford Facility RCRA Permit coordination requirements provide otherwise. The Building Emergency Director has the authority to carry out the provisions of this plan.

TABLE OF CONTENTS

1.0 GENERAL INFORMATION 5
- 1.1 FACILITY NAME 5
- 1.2 FACILITY LOCATION 5
- 1.3 OWNER 6
- 1.4 DESCRIPTION OF FACILITY AND OPERATIONS 6
- 1.5 BUILDING EVACUATION ROUTING 7

2.0 PURPOSE 7

3.0 FACILITY BUILDING EMERGENCY RESPONSE ORGANIZTION 7
- 3.1 BUILDING EMERGENCY DIRECTOR 10
- 3.2 OTHER MEMBERS 10

4.0 IMPLEMENTATION OF THE PLAN 10

5.0 FACILITY HAZARDS 11
- 5.1 HAZARDOUS MATERIALS 12
- 5.2 INDUSTRIAL HAZARDS 12
- 5.3 DANGEROUS/MIXED WASTE 12
- 5.4 RADIOACTIVE MATERIALS 12
- 5.5 CRITICALITY 12

6.0 POTENTIAL EMERGENCY CONDITIONS 13
- 6.1 FACILITY OPERATIONS EMERGENCIES 13
- 6.2 NATURAL PHENOMENA 14
- 6.3 SECURITY CONTINGENCIES 15
- 6.4 UNEXPECTED/UNIDENTIFIED ODORS 15

7.0 INCIDENT RESPONSE 15
- 7.1 PROTECTIVE ACTION RESPONSES 15
- 7.2 RESPONSE TO FACILITY OPERATIONS EMERGENCIES 17
- 7.3 PREVENTION OF RECURRENCE OR SPREAD OF FIRES, EXPLOSIONS, OR RELEASES 21
- 7.4 RESPONSE TO NATURAL PHENOMENA 21
- 7.5 SECURITY CONTINGENCIES 23
- 7.6 RESPONSE TO UNEXPECTED/UNIDENTIFED ODORS 24

8.0 TERMINATION OF EVENT, INCIDENT RECOVERY, AND RESTART OF OPERATIONS 24
- 8.1 TERMINATION OF EVENT 24
- 8.2 INCIDENT RECOVERY AND RESTART OF OPERATIONS 24
- 8.3 INCOMPATIBLE WASTE 25
- 8.4 POST EMERGENCY EQUIPMENT MAINTENANCE AND DECONAMINATION 25

9.0 EMERGENCY EQUIPMENT 26
- 9.1 FIXED EMERGENCY EQUIPMENT 26

9.2 PORTABLE EMERGENCY EQUIPMENT 26
9.3 COMMUNICATIONS EQUIPMENT/WARNING SYSTEMS 27
9.4 PERSONAL PROTECTIVE EQUIPMENT 27
9.5 SPILL CONTROL AND CONTAINMENT SUPPLIES 27
9.6 INCIDENT COMMAND POST 28

10.0 COORDINATION AGREEMENTS 28

11.0 REQUIRED REPORTS 28

12.0 PLAN LOCATION AND AMENDMENTS 28

13.0 FACILITY/BUILDING EMERGENCY RESPONSE ORGANIZATION 28

14.0 REFERENCES 29

ATTACHMENT A 29

1.0 GENERAL INFORMATION

The Waste Encapsulation and Storage Facility (WESF) is located on the Hanford Site, a 560-square-mile (1,450-square kilometer) U.S. Department of Energy Richland Office (DOE/RL) site in southeastern Washington State. The WESF is located in the northwest portion of the 200 East Area near the center of the Hanford Site. The Hanford Site Emergency Preparedness Program is based on the incident command system that allows a graded approach for response to emergency events. This plan contains a description of facility specific emergency planning and response and is used in conjunction with Hanford Facility RCRA Permit (Permit) Attachment 4, *Hanford Emergency Management Plan* (DOE/RL-94-02). Response to events is performed using facility specific and/or Hanford Site level emergency procedures.

1.1 Facility Name:

U.S. Department of Energy
Hanford Site
Waste Encapsulation and Storage Facility (WESF)

1.2 Facility Location:

Benton County, Washington within the 200 East Area

Buildings/facilities covered by this plan are:

211BA WESF Storage Building
225B Waste Encapsulation and Storage Facility
225BA K1 Filter Building
225BB K3 Filter Pit
225BC Compressor Building
225BD Waste Monitoring and Sample Building
225BE Maintenance Building
225BF Air Dryer (225BC Annex)
225BG Closed Loop Cooling System Building
226B Dangerous waste <90 day storage and
272B Operations/Storage Building
272BA Maintenance and Material Storage Building
272BB Tool Crib
282B Emergency Water Pump House (South)
282BA Emergency Water Pump House (North)
296B10 WESF Stack
294B Backflow Preventer Building
MO133 Office Areas
MO134 Craft trailer MO232 Office Areas, Training Trailer
MO312 Laundry Storage
MO2237 Mask Station
MO400 Office Areas
MO408 Office Areas
MO410 Office Areas

1.3 Owner:

U.S. Department of Energy
Richland Operations Office
825 Jadwin Avenue
Richland, Washington 99352

FACILITY MANAGER:

CH2M HILL Plateau Remediation Company
P.O. Box 1600
Richland, Washington 99352-1600

1.4 Description of the Facility and Operations

WESF was built to encapsulate radioactive cesium and strontium removed from underground storage tanks (Tank Farms) and is comprised of a canyon area, process cells, water-cooled storage pools, required support systems and capsule handling facilities. The process cells include manipulators that permit operators to perform the actions required for cesium and strontium capsule movement and inspections while looking through windows of 3-foot thick, leaded glass. Radioactive containment and confinement features are incorporated to protect plant personnel and the public from excessive radiation exposures.

The capsules are welded, stainless steel containers that encapsulate the highly radioactive cesium and strontium. The capsules are normally stored in the water-cooled storage pools. Individual capsules may be stored in the hot cells. The canyon structure separates clean working areas from highly contaminated process areas with concrete shielding.

Project W-130 will replace the exhaust portion of the existing K3 ventilation system with new components that will be referred to as the K3N exhaust ventilation system. The K3N exhaust ventilation system will tie into the existing stack and include an above grade filter skid and two exhaust fans. Project W-130 will also stabilize the contamination in A Cell through F Cell, the hot pipe trench, the K3 duct trench, the below grade K3 exhaust ventilation system ductwork, the K3 filter housings, and the K3 filter pits. The stabilization activities will minimize the potential for the spread of contamination from the facility.

1.4.1 Temporary Waste Accumulation Area

WESF temporary storage areas are:

- 226B Dangerous waste <90 day storage and
- 225-BE Satellite Storage Area

The waste stored at these locations can have one or more of the following characteristics: toxic, corrosive, reactive, flammable, and/or explosive.

1.4.2 Treatment, Storage and/or Disposal Units

WESF contains one Treatment, Storage and/or Disposal (TSD) unit, which contains two portions. The two portions are as follows:

- *Hot Cells A through G:* The hot cells are designated TSD units for possible storage of cesium capsules, strontium capsules, and if necessary, un-encapsulated material.
- *Storage Pool Cells 1 & 3 through 7 and 12:* The pool cells are designated TSD units due to the storing of cesium capsules and strontium capsules. (Other pool cells are also designed as TSD unit storage but are not being used for that purpose, e.g. Pools Cells 2 and 8.)

1.4.3 Outside Chemical Storage

Chemicals for pool cell cooling water treatment are stored in the Closed Loop Cooling System building (225-BG). The types of chemicals found in 225-BG include citric acid for pH control, a general corrosion inhibitor, and a biocide for control of algae and other micro-organisms.

1.4.4 Inside Chemical Storage

Tri-sodium phosphate is stored in WESF AMU and is used to decontaminate manipulators.

1.5 Building Evacuation Routing

Figures 1 and 2 provide identification of the primary and secondary staging areas and a general layout of the WESF. Alternate evacuation routes will be used on a case-by-case basis based on meteorological conditions at the time of the event.

2.0 PURPOSE

This plan describes both the facility hazards and the basic responses to upset and/or emergency conditions within the WESF. These events may include spills or releases caused by processing, fires and explosions, transportation activities, movement of materials, packaging, storage of hazardous materials, and natural and security contingencies. When used in conjunction with Permit Attachment 4, *Hanford Emergency Management Plan* (DOE/RL-94-02), this plan meets the requirements for contingency planning as required by WAC 173-303. Sections 1.5, 3.1, 4.0, 7.1, 7.1.1, 7.1.2, 7.2, 7.2.1, 7.2.2, 7.2.3, 7.2.4, 7.2.5, 7.2.5.1, 7.3, 8.2, 8.3, 8.4, 9.0, 9.1, 9.2, 9.3, 9.4, 9.5, 9.6, 11.0, 12.0, 13.0 of the Building Emergency Plan (BEP) are enforceable sections meeting RCRA contingency planning requirements. Enforceable sections cannot be changed without coordinating the change with the Permit modification process.

3.0 FACILITY/BUILDING EMERGENCY RESPONSE ORGANIZATION

Personnel listed in WESF Emergency Response Organization (ERO) listing are the minimum recommended staff for WESF, which is established to handle various emergencies at WESF. In any emergency that requires implementation of this emergency plan, the on-call Building Emergency Director (BED) has the authority to commit the resources required to respond, including money, manpower, and/or equipment.

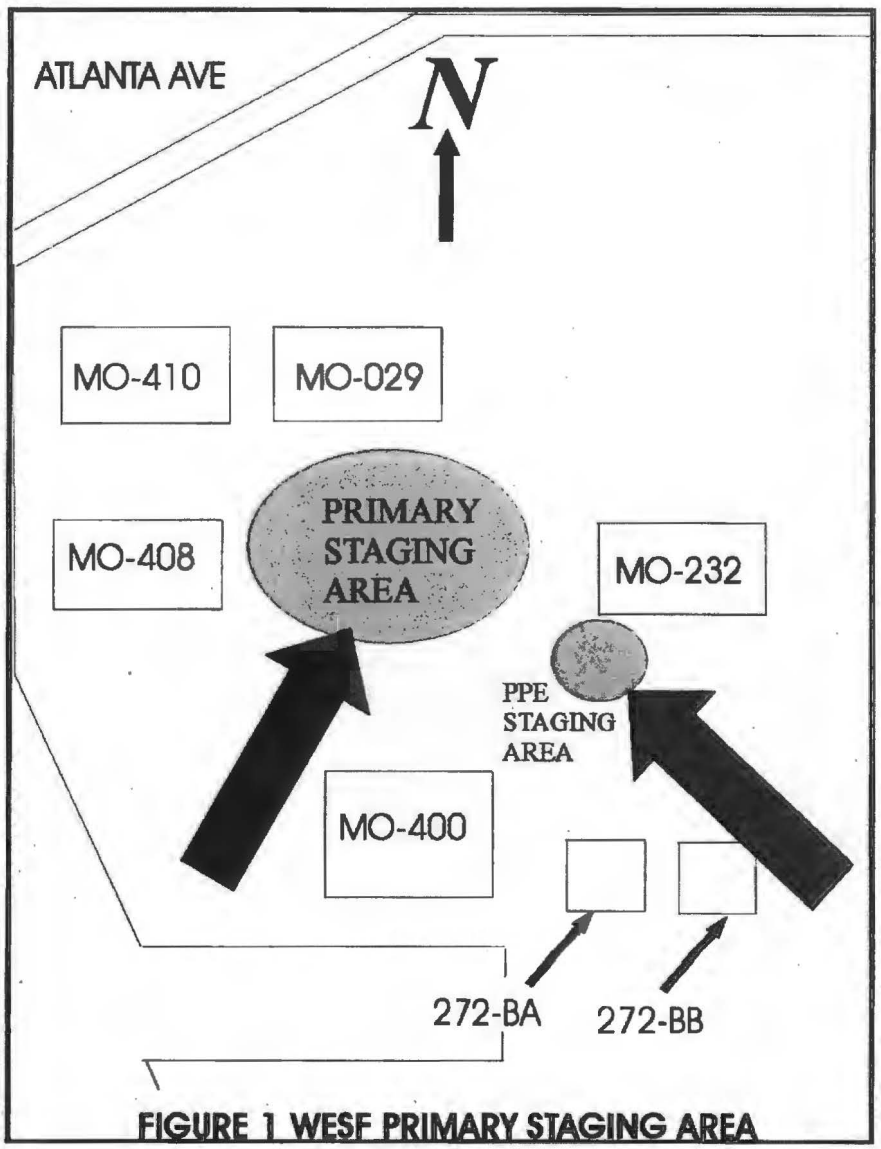

FIGURE 1 WESF PRIMARY STAGING AREA

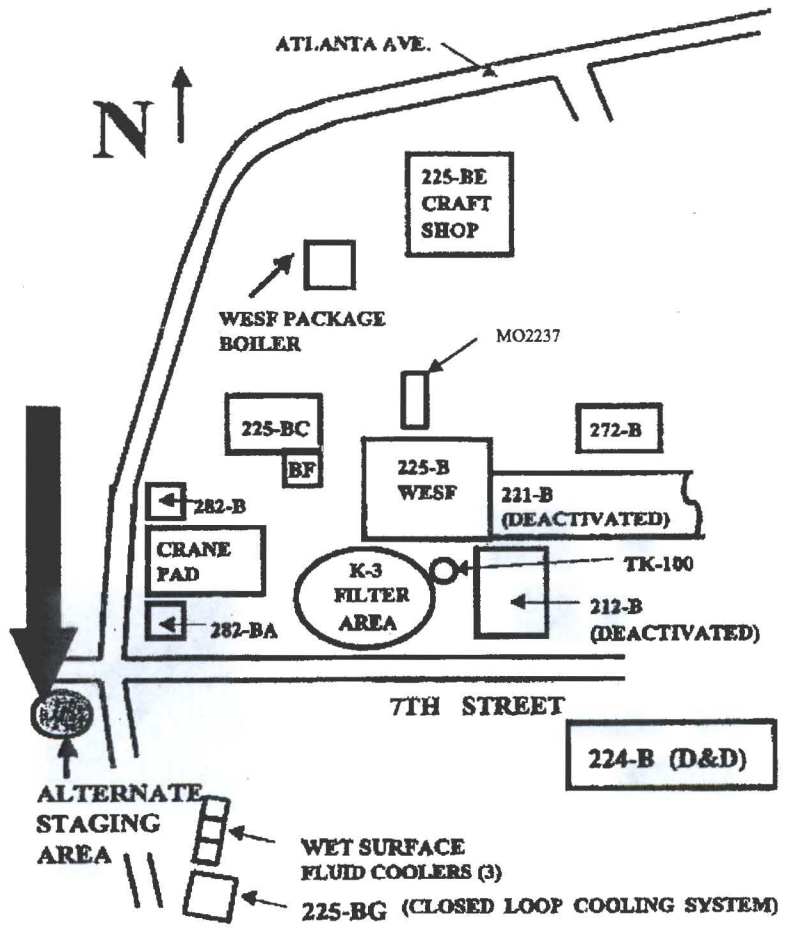

FIGURE 2 WESF ALTERNATE STAGING AREA

3.1 Building Emergency Director

Emergency response will be directed by the BED until the Incident Commander (IC) arrives. The Incident Command System (ICS) and staff with supporting on-call personnel fulfill the responsibilities of the Emergency Coordinator as discussed in WAC 173-303-360. During events, WESF personnel perform response duties under the direction of the BED. The Incident Command Post (ICP) is managed by the senior Hanford Fire Department official, unless the event is determined to primarily be a security event, in which case the Hanford Fire Department and Hanford Patrol will operate under a unified command system with Hanford Patrol making all decisions pertaining to security. These individuals are designated as the IC, and as such, have the authority to request and obtain any resources necessary for protecting people and the environment.

The BED becomes a member of the ICP and functions under the direction of the IC. In this role, the BED continues to manage and direct WESF operations.

A listing of BEDs by title, work location, and work telephone number is contained in Section 13.0 of this plan. The BED is on the premises or is available through an "on-call" list 24-hours a day. Names and home telephone numbers of the BEDs are available from the Patrol Operations Center (POC) in accordance with Permit Condition II.A.4.

3.2 Other Members

As a minimum, Facility Management appoints and ensures training is provided to individuals to perform as Personnel Accountability Aides and Staging Area Managers. The Personnel Accountability Aides are responsible for facilitating the implementation of protective actions (evacuation or take cover) and for facilitating the accountability of personnel after the protective actions have been implemented. Staging Area Managers are responsible for coordinating and conducting activities at the staging area. In addition, the BED can identify additional support personnel (radiological control, maintenance, engineering, hazardous material coordinators, etc.) to be part of the Facility/Building Emergency Response Organization.

The complete Facility/Building Emergency Response Organization listing of positions, names, work locations, and telephone numbers for the WESF is maintained in a separate location in a format determined appropriate by WESF management. Copies are distributed to appropriate WESF locations and to Emergency Preparedness.

4.0 IMPLEMENTATION OF THE PLAN

In accordance with WAC 173-303-360(2)(b), the BED ensures that trained personnel identify the character, source, amount, and areal extent of the release, fire, or explosion to the extent possible. Identification of waste can be made by activities that can include, but are not limited to, visual inspection of mixed waste capsules, sampling activities in the field, reference to inventory records, or by consulting with facility personnel. Samples of materials involved in an emergency might be taken by qualified personnel and analyzed as appropriate. These activities must be performed with a sense of immediacy and shall include available information.

The BED shall use the following guidelines to determine if an event has met the requirements of WAC 173-303-360(2)(d):

1. The event involved an unplanned spill, release, fire, or explosion,

AND

2.a The unplanned spill or release involved a dangerous waste, or the material involved became a dangerous waste as a result of the event (e.g., product that is not recoverable.),

OR

2.b The unplanned fire or explosion occurred at the WESF or transportation activity subject to RCRA contingency planning requirements,

AND

3. Time-urgent response from an emergency services organization was required to mitigate the event or a threat to human health or the environment exists.

As soon as possible, after stabilizing event conditions, the BED shall determine, in consultation with the site contractor environmental single-point-of-contact, if notification to the Washington State Department of Ecology (Ecology) is needed to meet WAC-173-303-360 (2)(d) reporting requirements. If all of the conditions under 1, 2, and 3 are met, notifications are to be made to Ecology. Additional information is found in Permit Attachment 4, *Hanford Emergency Management Plan* (DOE/RL-94-02), Section 4.2.

If review of all available information does not yield a definitive assessment of the danger posed by the incident, a worst-case condition will be presumed and appropriate protective actions and notifications will be initiated. The BED is responsible for initiating any protective actions based on their best judgment of the incident.

The BED must assess each incident to determine the response necessary to protect the personnel, facility, and the environment. If assistance from Hanford Patrol, Hanford Fire Department, or ambulance units is required, the Hanford Emergency Response Number (911 from site office phone/373-0911 from cellular phone) must be used to contact the POC and request the desired assistance. To request other resources or assistance from outside the WESF, the POC business number is used (373-3800).

5.0 FACILITY HAZARDS

This section provides an overview of hazardous materials, processes and/or operations that may be encountered at WESF.

5.1 Hazardous Materials

The current operations occurring at WESF require minimal use of bulk chemicals and small quantities of non-radioactive hazardous materials. Chemical storage areas are located inside and outside of complex facilities.

5.1.1 Outside chemical storage

Chemicals for pool cell cooling water treatment are stored in the Closed Loop Cooling System building (225-BG). The types of chemicals found in 225-BG include citric acid for pH control, a general corrosion inhibitor, and a biocide for control of algae and other micro-organisms.

5.1.2 Inside chemical storage

Tri-sodium phosphate is stored in WESF AMU and is for decontamination.

5.2 Industrial Hazards

WESF industrial hazards are similar to those found at many industrial projects on the Hanford Site. These hazards deal with compressed air systems, confined spaces (chemical inhalation, toxic/combustible material inhalation in chemical sewer manholes), high voltage equipment (electrical burns, shock), rotating equipment such as fans and turbines (noise, abrasions), and radiological hazards (radiological exposure depending on location).

5.2.1 Gas Bottle Storage Area

Nonflammable gas cylinders are stored in the Gas Bottle Storage Area on the west outside wall of WESF.

5.3 Dangerous/Mixed Waste

WESF generates small quantities of waste from routine facility operation and maintenance activities. WESF temporary storage areas and Chemical Management is contained in Section 1.4, Description of the Facility and Operations.

5.4 Radioactive Materials

The radioactive material in WESF consists mainly of cesium and strontium capsules stored in Pool Cells (54 MCi decayed to April 2010), residual contamination in process cells and vessels (approximately 120 kCi), and radioactive material captured in the K-3 exhaust duct (maximum of 150 kCi) and filter system (maximum of 9.2 kCi). Other radioactive materials and contamination can be found in areas designated as "Radiation Areas," "Contamination Areas," and "fixed Contamination Areas."

5.5 Criticality

Because no amount of fissile material exists at WESF, criticality is not possible. This section is not applicable to WESF.

6.0 POTENTIAL EMERGENCY CONDITIONS

Potential emergency conditions, under both WAC 173-303 and the DOE, may include one of three basic categories: (1) operations (process upsets, fires, explosions, loss of utilities, spills, and releases), (2) natural phenomena (e.g., earthquakes), and (3) security contingencies (e.g., bomb threat, hostage situation, etc.). The following are conditions that may lead to an emergency at the WESF.

6.1 Facility Operations Emergencies

6.1.1 Loss of Utilities

A loss of utilities could include the loss of electricity, loss of water (raw, sanitary, deionized), loss of ventilation or loss of air.

6.1.1.1 Loss of Electricity

Loss of electricity may result in a loss of ventilation needed for air balance contamination control as well as loss of system and radiological monitoring. The associated hazard is contamination spread and potential hydrogen accumulation in the pool cell area and hot cells.

6.1.1.2 Loss of Water

At the WESF, water loss can impact the fire protection systems, pool cell cooling, and water addition to the pool cells. This may result in an increased risk of hazardous chemical or radiological exposure.

6.1.1.3 Loss of Ventilation

Ventilation loss could result in the loss of contamination control, producing an increased risk for exposure to radioactive materials. Potential areas of contamination at WESF include the truck port, and galleries. The ventilation systems also remove hydrogen from the pool cell area and hot cells. Loss of ventilation could result in accumulation of hydrogen in these areas.

6.1.1.4 Loss of Air

At WESF loss of air could result in the following: Loss of ventilation control and loss of system monitoring capabilities.

6.1.2 Major Process Disruption/Loss of Plant Control

This Section is not applicable to WESF.

6.1.3 Pressure Release

The pressure hazards at WESF are the air systems (100 and 25 psig) and raw and sanitary water systems (100 psig).

6.1.4 Fire and/or Explosion

Fire hazards include smoke inhalation, explosions, burns, equipment damage, and an increased risk of exposure to airborne hazardous materials.

6.1.5 Hazardous Material Spill

Hazards associated with spills include potential exposure to radioactive, toxic, and corrosive material as well as environmental damage.

6.1.6 Dangerous/Mixed Waste Spill

Leaking capsule in pool cell will present hazard to operations personnel.

6.1.7 Transportation and /or Packaging Incidents

There is the potential for an emergency situation from an accident occurring during loading or transport of hazardous materials away from or to WESF. An incident resulting from a transportation or packaging accident has the potential for contamination of the environment, exposure to personnel, and associated industrial hazards.

6.1.8 Radioactive Material Release

Mixed wastes stored at the WESF could produce airborne radioactive contamination. The following types of emergencies are those identified as credible for this facility.

6.1.8.1 Gaseous Effluent Discharges (Stack Releases)

Hazards associated with stack releases include personnel and environmental exposure to radioactive airborne contamination.

6.1.8.2 Liquid Effluent Discharges

The primary hazard associated with a contaminated liquid effluent release is an environmental and personnel exposure to radioactive materials.

6.1.8.3 Significant Contamination Spread/Releases

Significant contamination spread or release may result in personnel and environmental exposure to radioactive materials.

6.1.9 Criticality

This section is not applicable to WESF.

6.2 Natural Phenomena

Natural phenomena are discussed in the following sections.

6.2.1 Seismic Event

The pool cell and hot cell structures are designed to withstand a 0.25g earthquake. Depending on the magnitude of the event, severe structural damage can occur resulting in serious injuries or fatalities and the release of hazardous materials to the environment. Damaged electrical circuits and wiring could result in the initiation of fires. An earthquake at the facility could result in a radioactive material release from the stack. WESF K-3 filter duct connections are not seismically qualified. Therefore, the K-3 exhaust is a likely source of radioactive material release after a seismic event.

6.2.2 Volcanic Eruption/Ash fall

Though not expected to cause structural damage, the ash resulting from a volcanic eruption could cause shorts in electrical equipment and plug ventilation system filters. Although a heavy deposition could present health hazards to Hanford Site workers due to respiration of ash, water supply contamination, and collapse of some of the older roofs, it is not expected that such an event would cause a significant release from WESF. It is assumed that there will be ample warning of an approaching large ash fall and the facility could be placed in a stable condition and steps taken to protect workers.

6.2.3 High Winds/Tornadoes

High winds or tornadoes may cause structural damage to systems containing hazardous materials resulting in a release of the materials to the environment.

6.2.4. Flood

Flooding can cause the release of hazardous materials depending on the type of storage containers. Floods can also cause short circuits in electrical wiring located at or below ground level. This may then result in an increased likelihood of fires. Flooding of WESF HEPA filters could result in loss of the associate ventilation system and/or possible release of radioactive material.

6.2.5 Range Fire

The hazards associated with a range fire are the same as those associated with a building fire plus potential site access restrictions and travel hazards such as poor visibility.

6.2.6 Aircraft Crash

In addition to the potential for serious injuries or fatalities, an aircraft crash could result in the direct release of hazardous materials to the environment or cause a fire that could lead to a release.

6.3 Security Contingencies

Security contingencies are discussed in the following sections.

6.3.1 Bomb Threat/Explosive Device

A bomb threat may be received by anyone who answers the telephone or receives mail. The major effect on the WESF is that personnel will need to perform safe shutdown of the facility before evacuation. If an explosive device detonates, the effects are the same as those discussed under fire and explosion.

6.3.2 Hostage Situation/Armed Intruder

A hostage situation or the entry of an armed hostile intruder(s) can pose an emergency if either of these conditions has the potential to adversely affect facility operations.

6.3.3 Suspicious Object

If a suspicious object is discovered, the major effect on the WESF is that personnel will need to perform an emergency shutdown of the facility before evacuation.

6.4 Unexpected/Unidentified Odors

Unexpected or unidentified odors have the potential to cause health effects and could be indicative of other events.

7.0 INCIDENT RESPONSE

The initial response to any emergency is to immediately protect the health and safety of persons in the affected area. Identification of released material is essential to determine appropriate protective actions. Containment, treatment, and disposal assessment are secondary responses.

The following sections describe the process for implementing basic protective actions as well as descriptions of response actions for the events listed in Section 6.0 of this plan. Permit Attachment 4, *Hanford Emergency Management Plan* (DOE/RL-94-02), Section 1.3, provides concept of operations for emergency response on the Hanford Site.

This section provides a discussion of protective action responses, response to facility operations emergencies, response to natural phenomena, and response to security contingencies. In addition, a section addressing prevention of secondary release, fires, or explosions is provided.

7.1 Protective Action Responses

Protective action responses are discussed in the following sections. The steps identified in the following description of actions do not have to be performed in sequence because of the unanticipated sequence of incident events.

7.1.1 Evacuation

7.1.1.1 Building/Facility Evacuation

The required actions to be accomplished during an evacuation of WESF are determined by the BED.

The building exits are clearly marked throughout WESF and are kept clear of obstructions. Special provisions for any person temporarily or permanently disabled are provided as necessary.

If an evacuation is ordered or the evacuation siren sounds (steady siren), employees shall leave the building by the nearest exit and proceed to the Primary Staging Area for accountability unless they are instructed otherwise.

Locations of both the Primary and Alternate staging areas are:

- Primary Staging Area: Between MO400 and MO029
- Alternate Staging Area: Southwest corner of Atlanta Ave. and 7th St.

Staging Areas for personnel in protective clothing are as follows:

- Primary Staging Area: Sign #8 south of MO-232
- Alternate Staging Area: Stage in a location determined by the SAM to remain segregated and downwind from affected personnel.

Evacuation notification to plant personnel will be performed by any available means. This may include the Evacuation Siren (steady siren), PA Announcements, Runners, or the use of Bullhorns.

7.1.1.2 Area Evacuation

All employees shall be familiar with the evacuation process. The order to evacuate the area will normally be passed via the emergency alerting systems.

Individuals must stop work and place the facility in a safe condition. Use emergency shutdown procedures if necessary.

The evacuation siren will be activated. In the event that the evacuation siren is inoperable, the BED will issue the order to evacuate by any available means.

Personnel report to the Primary Staging Area, unless otherwise directed. Accountability of personnel will be performed. The results of personnel accountability will be reported to the Emergency Operations Center (EOC), only if accountability cannot be established.

Personnel will be segregated into four groups:

- Protective clothing clad personnel,
- Persons with keys to immediately available private vehicles,
- Persons with keys to government vehicles, and
- All others.

Load personnel in civilian clothes into private and government vehicles, load protective clothing clad persons into a separate government vehicle, and request additional transportation for people with late shutdown duties. Pertinent evacuation information (routes, destination, etc.) is relayed to personnel with vehicle keys. Vehicles are dispatched as soon as they are loaded. Load remaining people into private vehicles, maintaining segregation if possible.

Requests for additional transportation are relayed to the EOC. In addition, the BED provides a status report of any personnel remaining to perform late shutdown duties.

7.1.2 Take Cover

The required actions to be accomplished during a take cover at WESF are set forth in a facility-specific procedure.

When the Take Cover Alarm (wavering siren) is activated, personnel shall take cover in the nearest building or trailer. The BED shall notify the POC upon activation of the emergency siren system.

The following actions should be taken or considered in a Take Cover:

- Shut doors and windows and wait for further instructions.
- Secure ventilation and unnecessary electronic or electrical equipment, if possible.
- Follow normal exit procedures from radiological areas (in preparation for a possible evacuation).
- Potentially exposed personnel should be reported to the BED to assure they receive appropriate follow-up evaluation.

7.2 Response to Facility Operations Emergencies

Depending on the severity of the event, the BED reviews the site-wide and WESF emergency response procedure(s) and, as required, categorizes and/or classifies the event. If necessary, the BED initiates area protective actions and Hanford Site Emergency Response Organization activation. The steps identified in the following description of actions do not have to be performed in sequence because of the unanticipated sequence of incident events. Attachment A provides a list of procedures.

7.2.1 Loss of Utilities

A case-by-case evaluation is required for each event to determine loss of utility impacts. When a BED determines a loss of utility impact, actions are taken to ensure dangerous and/or mixed

waste is being properly managed, to the extent possible given event circumstances. As necessary, the BED will stop operations and take appropriate actions until the utility is restored.

7.2.1.1 Loss of Electricity

In the event of a loss of normal electrical power to buildings requiring power to maintain air balance for contamination control, occupants of the buildings shall evacuate and assemble at the staging area or non-contaminated area.

For detailed operational emergency response, refer to the facility-specific plan and Emergency Response Procedure (ERP).

7.2.1.2 Loss of Water

For detailed operational emergency response, refer to the facility-specific plan and ERP procedure.

7.2.1.3 Loss of Ventilation

For detailed operational emergency response, refer to facility-specific plan and ERP procedures.

7.2.1.4 Loss of Air

For detailed operational emergency response, refer to the facility-specific plan and ERP procedure.

7.2.1.5 Utility Disconnect Plan

The utility disconnect plan for WESF is contained in a facility-specific procedure.

7.2.2 Major Process Disruption/Loss of Plant Control

This section is not applicable to WESF because operations at WESF do not include a major process.

7.2.3 Pressure Release

Possible pressure-related emergencies at WESF could be due to a failure of the air receiver tank, the air dryer, and gas cylinder bottles. For detailed response, refer to facility-specific plan and ERP.

7.2.4 Fire and/or Explosion

In the event of a fire, the discoverer activates a fire alarm (pull box); calls 911 from site office phone/373-0911 from cellular phone, or verifies that Hanford Emergency Response Number has been called. Automatic initiation of a fire alarm (through the smoke detectors and sprinkler system) is also possible.

- Unless otherwise instructed, personnel shall evacuate the area/building by the nearest safe exit and proceed to the designated staging area for accountability.
- On actuation of the fire alarm, ONLY if time permits, personnel should shut down equipment and secure waste. The alarm automatically signals the Hanford Fire Department.
- The BED proceeds directly to the ICP, obtains all necessary information pertaining to the incident and sends a representative to meet Hanford Fire Department.
- The BED provides a formal turnover to the IC, when the IC arrives at the ICP.
- The BED informs the Hanford Site Emergency Response Organization as to the extent of the emergency (including estimates of dangerous waste and mixed waste quantities released to the environment).
- If operations are stopped in response to the fire, the BED ensures that systems are monitored for leaks, pressure buildup, gas generation, and ruptures.
- Hanford Fire Department firefighters extinguish the fire as necessary.

7.2.5 Hazardous Material, Dangerous and/or Mixed Waste Spill

Spills can result from many sources including process leaks, container spills or leaks, damaged packages or shipments, or personnel error. Spills of mixed waste are complicated by the need to deal with the extra hazards posed by the presence of radioactive materials.

- The discoverer notifies the BED and initiates SWIM response:
  - **S**tops work,
  - **W**arns others in vicinity,
  - **I**solates the area,
  - **M**inimizes exposure to the hazards.

- If applicable, requests the BED Secure ventilation.
- The BED determines if emergency conditions exist requiring response from the Hanford Fire Department based on classification of the spill and injured personnel, and evaluates the need to perform additional protective actions.
- If the Hanford Fire Department resources are not needed, the spill is mitigated with resources identified in Section 9.0 of this plan and proper notifications are made.
- If the Hanford Fire Department resources are needed, the BED calls 911 from site office phone/373-0911 from cellular phone.
- The BED sends a representative to meet the Hanford Fire Department.
- The BED provides a formal turnover to the IC when the IC arrives at the ICP.
- The BED informs the Hanford Site Emergency Response Organization as to the extent of the emergency (including estimates of dangerous waste and mixed waste quantities released to the environment).
- If operations are stopped in response to the spill, the BED ensures that systems are monitored for leaks, pressure buildup, gas generation, and ruptures.
- Hanford Fire Department stabilizes the spill.

7.2.5.1 Damaged or Unacceptable Shipments

The WESF does not receive onsite transfers or off-site shipments of dangerous and/or mixed waste.

7.2.6 Radioactive Material Release

Section 7.2 addresses the requirements for a radiological material release.

For detailed responses refer to facility-specific plant and ERP procedure as listed in Attachment A.

7.2.6.1 Loss of Pool Cell Water

For detailed WESF operational emergency response, refer to the facility-specific plant and ERP procedure.

7.2.6.2 Radioactive Gaseous Effluent Discharge - Stack Alarm

For detailed operational emergency response, refer to the facility-specific plant and ERP procedure.

There is continuous monitoring of the air stream with both local and remote alarms as required for a major stack.

7.2.6.3 Radioactive Liquid Effluent Discharge

For detailed operational emergency response, refer to the facility-specific plant and ERP procedure.

7.2.6.4 Significant Airborne Contamination

For detailed operational emergency response, refer to the facility-specific plant and ERP procedure.

Typically, a continuous air monitor (CAM) will indicate airborne contamination. Personnel shall respond to a continuous air monitor alarm by carrying out the following activities:

- Stop work activities, immediately exit the area, and notify management and the BED.
- Warn other personnel to stay out of the area.
- Contact Radiological Control (RC) and Operations Management and stand by for survey and contamination status.
- Operations will post the area as an airborne radioactivity area. RC will investigate the cause and survey as appropriate to determine the extent of contamination.

7.2.7 Criticality

This section is not applicable to WESF.

7.3 Prevention of Recurrence or Spread of Fires, Explosions, or Releases

The BED, as part of the ICP, takes the steps necessary to ensure that a secondary release, fire, or explosion does not occur. The BED will take measures, where applicable, to stop processes and operations; collect and contain released wastes and remove or isolate containers. The BED shall also monitor for leaks, pressure buildups, gas generation, or ruptures in valves, pipes, or other equipment, whenever this is appropriate.

7.4 Response to Natural Phenomena

Depending on the severity of the event, the BED reviews site wide and WESF emergency response procedure(s) and, as required, categorizes and/or classifies the event. If necessary, the BED initiates area protective actions and Hanford Site Emergency Response Organization activation. The steps identified in the following description of actions do not have to be performed in sequence because of the unanticipated sequence of incident events. Attachment A provides a list of procedures.

7.4.1 Seismic Event

Section 7.4 addresses the requirements for a seismic event.

The Hanford Site Emergency Response Organization primary role in a seismic event is coordinating the initial response to injuries, fires, and fire hazards and acting to contain or control radioactive and/or hazardous material releases.

Individuals should remain calm and stay away from windows and hazardous material storage locations. Once the shaking has subsided, individuals shall evacuate carefully and assist personnel needing help. The location of any trapped individuals should be reported to the BED or reported to 911 from site office phones/373-0911 from cellular phone.

The BED takes whatever actions are necessary to minimize damage and personnel injuries. Responsibilities include the following:

- Coordinating searches for personnel and potential hazardous conditions (fires, spills, etc.).
- Conducting accountability.
- Securing utilities and facility operations.
- Arranging rescue efforts, and notifying 911 for assistance.
- Determining if hazardous materials were released.
- Determining current local meteorological conditions.
- Warning other facilities and implementing protective actions if release of hazardous materials poses an immediate danger.
- Providing personnel and resource assistance to other facilities, if required and possible.

7.4.2 Volcanic Eruption/Ash fall

Section 7.4 addresses the requirements for a volcanic eruption/ash fall.

Volcanic eruptions and ash fallout from the Cascade mountain range are a possibility. The

Hanford Site Emergency Operations Center will notify the facility of impending ashfall. When notified of impending ashfall, or when ash fall and/or snowfall are occurring, the BED will respond per the facility-specific procedure.

When notified of impending ash fall, the BED will implement measures to minimize the impact of the ash fall. BED actions include the following:

- Installing filter media over building ventilation intakes.
- Installing filter media or protective coverings on outdoors equipment that may be adversely affected by the ash (diesel generators, equipment rooms, etc.).
- Shutting down some or all operations and processes.
- Sealing secondary use exterior doors.

If other emergency conditions arise as a result of the ash fall (e.g., fires due to electrical shorts or lightning), response is as described in other sections of this plan.

7.4.3 High Winds/Tornadoes

Section 7.4 addresses the requirements for high winds/tornados.

Upon notification of impending high winds, the BED takes steps necessary to secure all outdoor waste and hazardous material containers and storage locations. All doors and windows are shut, and personnel are warned to use extreme caution when entering or exiting the building. Ventilation, utilities and operations will be shut down as appropriate to lessen the severity of the impact.

7.4.4 Flood

For detailed operational emergency response, refer to the facility-specific plant and ERP procedure.

7.4.5 Range Fire

Responses to range fires are handled by preventive measures (i.e., keeping hazardous material and waste accumulation areas free of combustible materials such as weeds and brush). If a range fire breaches the WESF boundary, the response is as described in Section 7.2.4.

7.4.6 Aircraft Crash

The response to an aircraft crash is the same as for a fire and/or explosion (Section 7.2.4).

7.5 Security Contingencies

Depending on the severity of the event, the BED reviews site-wide and WESF emergency response procedure(s) and, as required, categorizes and/or classifies the event. If necessary, the BED initiates area protective actions and Hanford Site Emergency Response Organization activation. The steps identified in the following description of actions do not have to be performed in sequence because of the unanticipated sequence of incident events. Attachment

A provides a list of procedures.

7.5.1 Bomb Threat/Explosive Device

Response to a bomb threat/explosive device is discussed in the following sections.

7.5.1.1 Telephone Threat

Individuals receiving telephoned threats attempt to get as much information as possible from the caller (using the bomb threat checklist if available). Upon conclusion of the call, or during the call if possible, notify the BED and Hanford Patrol by calling 911 (do not use wireless communications devices for reporting a bomb threat/explosive device unless beyond 100 feet from the suspected object).

The BED evacuates WESF and questions personnel at the staging area regarding any suspicious objects. When Hanford Patrol personnel arrive, follow their instructions.

7.5.1.2 Written Threat

Receivers of written threats handle the letter as little as possible. Notify the BED and Hanford Patrol by calling 911 (do not use wireless communications devices for reporting a bomb threat/explosive device unless beyond 100 feet from the suspected object). Depending on the content of the letter, the BED might evacuate the affected locations. The letter is turned over to Hanford Patrol and their instructions are followed.

7.5.2 Hostage Situation/Armed Intruder

The discoverer of a hostage situation or armed intruder reports the incident to 911 from site office phones/373-0911 from cellular phones and to the BED if possible. Hanford Patrol will determine the remaining response actions.

7.5.3 Suspicious Object

The discoverer of a suspicious object reports this object to the BED and to 911 (do not use wireless communications devices for reporting a bomb threat/explosive device unless beyond 100 feet from the suspected object), if possible, and ensures that the object is not disturbed.

7.6 Response to Unexpected/Unidentified Odors

Unexpected and unidentified odors should be investigated by the facility or project safety and health personnel. If the odor can be traced to an identifiable source and controlled safely with local resources, it can be resolved at the facility level. Air monitoring may aid in identification of a source and help determine if the odor is indicative of a health threat or is merely a nuisance. If facility or project safety and health personnel concur that the odor may be indicative of a health threat and cannot be safely controlled with local resources or an odor is found to be the result of an action or condition that requires emergency response, the Hanford Fire Department would be notified and respond accordingly.

8.0 TERMINATION OF EVENT, INCIDENT RECOVERY, AND RESTART OF OPERATIONS

Permit Attachment 4, *Hanford Emergency Management Plan* (DOE/RL-94-02), Section 9.0, describes actions for event termination, incident recovery, and restart of operations. The extent by which these actions are employed is based on the incident classification of each event. In addition, Permit Attachment 4, *Hanford Emergency Management Plan* (DOE/RL-94-02), also contains actions for the management of incompatible wastes that might apply.

8.1 Termination of Event

For events where the Hanford Emergency Operations Center (Hanford-EOC) is activated, the Site Emergency Director (SED) and the Incident Commander (IC) have the authority to declare event termination. Termination occurs after all applicable criteria in this procedure have been met and concurrence among SED and the IC has been obtained. Termination from a security-related event will include the concurrence of the Security Director. For events where the Hanford-EOC is not activated, the ICS and staff will declare event termination.

8.2 Incident Recovery and Restart of Operations

A recovery plan is developed when necessary in accordance with Permit Attachment 4, *Hanford Emergency Management Plan* (DOE/RL-94-02), Section 9.2. A recovery plan is needed following an event where further risk could be introduced to personnel, the WESF, or the environment through recovery action and/or to maximize the preservation of evidence.

If this plan was implemented according to Section 4.0 of this plan, Ecology is notified before operations can resume. Permit Attachment 4, *Hanford Emergency Management Plan* (DOE/RL-94-02), Section 5.1, discusses different reports to outside agencies. This notification is in addition to those required reports and must include the following statements.

- There are no incompatibility issues with the waste and released materials from the incident.
- All the equipment has been cleaned, fit for its intended use, and placed back into service.

The notification required by WAC 173-303-360(2)(j) may be made via telephone conference. Additional information that Ecology requests regarding these restart conditions will be included in the required 15-day report identified in Section 11.0 of this plan.

For emergencies not involving activation of the Hanford-EOC, the BED ensures that conditions are restored to normal before operations are resumed. If the Hanford Site Emergency Response Organization was activated and the emergency phase is complete, a special recovery organization could be appointed at the discretion of RL to restore conditions to normal. This process is detailed in RL and contractor emergency procedures. The makeup of this organization depends on the extent of the damage and the effects. The onsite recovery organization will be appointed by the appropriate contractor's management.

8.3 Incompatible Waste

After an event, the BED or the onsite recovery organization ensures that no waste that might be incompatible with the released material is treated, stored, and/or disposed of until cleanup is completed. Clean up actions are taken by WESF personnel or other assigned personnel. Permit Attachment 4, *Hanford Emergency Management Plan* (DOE/RL-94-02), Section 9.2.3, describes actions to be taken.

Waste from cleanup activities is designated and managed as newly generated waste. A field check for compatibility is performed before storage, as necessary. Incompatible wastes are not placed in the same container. Containers of waste are placed in approved storage areas appropriate for their compatibility class.

If incompatibility of waste was a factor in the incident, the BED or the onsite recovery organization ensures that the cause is corrected.

8.4 Post Emergency Equipment Maintenance and Decontamination

All equipment used during an incident is decontaminated (if practicable) or disposed of as spill debris. Decontaminated equipment is checked for proper operation before storage for subsequent use. Consumable and disposed materials are restocked. Fire extinguishers are replaced.

The BED ensures that all equipment is cleaned and fit for its intended use before operations are resumed. Depleted stocks of neutralizing and absorbing materials are replenished, protective clothing is cleaned or disposed of and restocked, etc.

9.0 EMERGENCY EQUIPMENT

Emergency resources and equipment for the WESF are presented in this section.

9.1 Fixed Emergency Equipment

FIXED EMERGENCY EQUIPMENT		
TYPE	**LOCATION**	**CAPABILITY**
225B Wet-Pipe Automatic Sprinkler System	225B areas, except process cells, canyon, and pool cell	Detect and Suppress Fire
Decontamination Rooms	225B SWP Lobby	Assist in decontamination of personnel
Safety Shower	225B SWP Lobby	Assist in flushing chemicals/materials from the body and/or eyes and face of personnel.
Eye Wash Station	225BG Chemical Room	Assist in flushing chemicals/materials from eyes and face of personnel.

Fire Doors	Throughout 225B	Fire Containment
Fire Alarm Pull Boxes	Throughout WESF	Notification of personnel and Hanford Fire Department (HFD)/Patrol Operations Center (POC)

9.2 Portable Emergency Equipment

PORTABLE EMERGENCY EQUIPMENT		
TYPE	**LOCATION**	**CAPABILITY**
Fire Extinguishers	Located throughout WESF	Fire suppression
Radiological Emergency Response Kit *	MO-232	Equipment and materials needed to assist in response to a radiological/emergency event.

*This equipment is for radiological emergency response purposes only. It is not Ecology's intent to regulate radionuclides. However, it is necessary to maintain an up-to-date complete BEP.

9.3 Communications Equipment/Warning Systems

COMMUNICATIONS EQUIPMENT		
TYPE	**LOCATION**	**CAPABILITY**
Public Address (PA) System	All telephones	Internal Communication Dial #, 8, 0, then talk
Steady Siren	Located in 225B Room 108 and MO232. Audible throughout WESF	Emergency Evacuation Notification to Personnel
Wavering Siren	Located in 225B Room 108 and MO232. Audible throughout WESF	Emergency Take Cover Notification to Personnel
Two-way radios	Key personnel	Internal Communications

NOTE: Site-wide communications and warning systems are identified in Permit Attachment 4, *Hanford Emergency Management Plan* (DOE/RL-94-02), Table 5.1.

9.4 Personal Protective Equipment

PERSONAL PROTECTIVE EQUIPMENT		
TYPE	**LOCATION**	**CAPABILITY**
Protective Clothing*	225B SWP Lobby, MO-312, and MO-232 Response Kit	Personnel Contamination Protection
Respirators*	MO2237 and MO-232	Airborne Contamination Protection

*This equipment is for radiological emergency response purposes only. It is not Ecology's intent to regulate radionuclides. However, it is necessary to maintain an up-to-date complete BEP.

9.5 Spill Control and Containment Supplies

SPILL KITS AND SPILL CONTROL EQUIPMENT		
TYPE	**LOCATION**	**CAPABILITY**
Spill Kit, drums, carts, etc.	WESF Heating, Ventilation/ Air Conditioning (HVAC) Room; 225B - WESF Aqueous Make-Up Unit (AMU); 225B Pool Cell Airlock and 225-BG	Response to spills of hazardous materials

9.6 Incident Command Post

The ICPs can be identified in a fixed location or the IC can determine a location appropriate for the event. Emergency resource materials are stored at each location. The IC could activate the Hanford Fire Department Mobile Command Unit if necessary.

10.0 COORDINATION AGREEMENTS

RL has established a number of coordination agreements or memoranda of understanding (MOU) with various agencies to ensure proper response resource availability for incidents involving the Hanford Site. A description of the agreements is contained in Permit Attachment 4, *Hanford Emergency Management Plan* (DOE/RL-94-02), Section 3.0, Table 3-1.

11.0 REQUIRED REPORTS

Post incident written reports are required for certain incidents on the Hanford Site. The reports are described in Permit Attachment 4, *Hanford Emergency Management Plan* (DOE/RL-94-02), Section 5.1.

Facility management must note in the TSD-unit operating record, the time, date and details of any incident that requires implementation of the contingency plan (refer to Section 4.0 of this plan). Within fifteen (15) days after the incident, a written report must be submitted to Ecology. The report must include the elements specified in WAC 173-303-360(2)(k).

12.0 PLAN LOCATION AND AMENDMENTS

Copies of this plan are maintained at the following locations:

- MO-232
- 225B, room 108A

This plan will be reviewed and immediately amended as necessary, in accordance with Permit Attachment 4, Hanford Emergency Management Plan (DOE/RL-94-02), Section 14.3.1.1.

13.0 FACILITY/BUILDING EMERGENCY RESPONSE ORGANIZATION

WESF BED's		
TITLE	**WORK LOCATION**	**WORK PHONE**
Shift Operations Manager	225B Operating Base	372-0764, 372-0054 or 372-0394

Names and home telephone numbers of the BEDs are available from the POC (373-3800) in accordance with Permit Condition II.A.4.

14.0 REFERENCES

DOE/RL-94-02, *Hanford Emergency Management Plan*

DOE O 231.1A, *"Environment, Safety, and Health Reporting"*, U.S. Department of Energy, Washington D.C.

DOE M 231.1-2, *"Occurrence Reporting and Processing of Operations Information"*, U.S. Department of Energy, Washington D.C.

WAC 173-303, *"Washington State Dangerous Waste Regulations," Washington Administrative Code*, Washington State Department of Ecology, Olympia, Washington

Ecology, *Hanford Facility Resource Conservation and Recovery Act Permit for the Treatment, Storage, and Disposal of Dangerous Waste, Permit Number* WA7890008967, Washington State Department of Ecology, Olympia, Washington, as amended.

ATTACHMENT A

Listing of Procedures

DOE-0223, *Emergency Plan Implementing Procedures*: RLEP 1.0 "Recognizing and Classifying Emergencies." Appendix 1-2.H.

DOE-0223, *Emergency Plan Implementing Procedures*: RLEP 1.1 "Hanford Incident Command System and Event Recognition and Classification"

DOE-0223, *Emergency Plan Implementing Procedures*: RLEP 3.4 "Emergency Termination, Reentry, and Recovery"

ERP-WESF-001, *Evacuation /Take Cover*

ERP-WESF-002, *Natural Hazard Emergency*

ERP-WESF-003, *Spills*

ERP-WESF-004, *Bomb Threat*

WESF-ORO-ER-52703, Loss of Pool Cell water

ATTACHMENT 2A

REDLINE STRIKEOUT CHANGES TO REVISED WESF PART B PERMIT APPLICATION PER IMPLEMENTATION OF PROJECT W-130 MODIFICATION

Addendum C

Process Information

This page intentionally left blank.

~~ADDENDUM C~~

~~PROCESS INFORMATION~~

Contents

~~C. PROCESS INFORMATION ..... C.1~~

~~C.1 Storage Unit Description ..... C.1~~

~~C.1.1 Description of Capsules ..... C.1~~

~~C.1.1.1 Cesium Capsules ..... C.1~~

~~C.1.1.2 Type W Capsules ..... C.1~~

~~C.1.1.3 Strontium Capsules ..... C.2~~

~~C.1.2 Capsule Management Practices ..... C.2~~

~~C.1.2.1 Removal of Mixed Waste Storage Capsules ..... C.2~~

~~C.1.2.2 Pool Cell Water ..... C.2~~

~~C.1.3 Capsule Labeling ..... C.2~~

~~C.1.4 Containment Requirements for Storing Capsules ..... C.2~~

~~C.2 Prevention Of Reaction Of Ignitable, Reactive, and Incompatible Waste In WESF ..... C.2~~

~~C.3 Analysis Of Miscellaneous Unit Regulatory Requirements Pursuant To WAC 173-303-680 ..... C.3~~

C1 Introduction and Operating Unit Group Description C-1

C1.1 Dangerous Waste Management Unit Descriptions C-3

C1.1.1 Hot Cell G DWMU C-4

C1.1.2 Pool Cells DWMU C-6

C1.2 List of Wastes and Maximum Waste Inventories C-1.i

C1.2.1 Hot Cell G DWMU Maximum Waste Inventory C-1.i

C1.2.2 Pool Cells DWMU Maximum Waste Inventory C-1.i

C2 Process Information C-2.i

C2.1 Description of Capsules C-2.ii

C2.1.1 Condition C-6

C2.1.2 Identification and Labeling C-6

C2.1.3 Waste Compatibility C-6

C2.2 Capsule Management Practices C-6

C2.2.1 Capsule Handling C-7

C2.2.2 Aisle Spacing C-7

C2.2.3 Inspections C-7

C2.3 Containment Requirements for Storing Capsules C-8

C2.3.1 Controlling Run-On and Runoff C-8

C2.4 Prevention of Reaction of Ignitable, Reactive, and Incompatible Waste in WESF C-8

C2.5 Air Emissions C-8

C2.5.1 Applicability of Subpart AA Standards C-8

C2.5.2 Applicability of Subpart BB Standards C-9

C2.5.3 Applicability of Subpart CC Standards C-9

C3 Analysis of Miscellaneous Unit Regulatory Requirements Pursuant to WAC 173-303-680 ..... C-9

C4 Training C-10

Figures

Figure C-1. WESF 225-B Building First Floor Plan C-2
Figure C-2. WESF 225-B Building Second Floor Plan C-2
Figure C-3. WESF 225-B Building East/West Sectional View C-3
Figure C-4. WESF 225-B Building North/South Sectional View C-3
Figure C-5. Hot Cell G Windows and Manipulators (June 2001) C-5
Figure C-6. K3N Process Flow Diagram C-7
Figure C-7. Pool Cell Circulation and Drain Lines C-9
Figure C-8. Isometric Drawing of Pool Cell Systems C-11
Figure C-9. K1, K2, and K4 Ventilation Systems C-13
Figure C-10. Cesium Capsule C-3
Figure C-11. Strontium Capsule C-5
Figure C-12. Type W Overpack (Typical) C-5

Table

Table C-1. Capsule Properties C-1

C1 Introduction and Operating Unit Group Description

This addendum provides a description of storage operations in effect at the Waste Encapsulation and Storage Facility (WESF) Operating Unit Group.

WESF is located in the northwestern portion of the 200 East Area of the Hanford Facility and consists of the main 225-B Building, which adjoins B Plant on the west end, as well as numerous support buildings and systems. The 225-B Building is approximately 47.9 m (157 ft) long by 30 m (97 ft) wide by 12 m (40 ft) high and is constructed of steel reinforced concrete that is partitioned into seven hot cells (A through G), the hot cell service area, operating areas, building service areas, and the pool cell area consisting of Pool Cells 1 through 12 (Figures C-1 through C-4).

The main, two-story, approximately 1,858 m^2 (20,000 ft^2) building (225-B) houses the three WESF dangerous waste management units (DWMUs), one closing unit and two operating units as indicated below:

- Hot Cells A through F (*Closing*)
- Hot Cell G (*Operating*)
- Pool Cells (*Operating*)

(Note: Since the Hot Cells A through F DWMU is considered a closing unit, further information regarding this DWMU is not provided in this addendum. Refer to Part V, *Closure Units*, of the *Hanford Facility Resource Conservation and Recovery Act Permit* (hereinafter referred to as the Hanford Facility RCRA Permit), identification number WA 7890008967, for further details on the WESF Hot Cells A through F.)

WESF operations provide for continued safe storage and maintenance of the 1,936 capsules containing cesium chloride and strontium fluoride salts (i.e., mixed waste). The WESF capsules meet the definition of "container" as defined in WAC 173-303-040, "Dangerous Waste Regulations," "Definitions." However, due to the unique characteristics of the capsules and radioactive component of the mixed waste, WESF storage operations differ from the standard container management requirements of WAC 173-303-630, "Use and Management of Containers." Therefore, WESF is considered a miscellaneous storage unit. For further discussion on the analysis of miscellaneous unit regulatory requirements pursuant to WAC 173-303-680, "Miscellaneous Units," refer to Section C3.

Due to the radioactive nature of the mixed waste contents, all cesium and strontium capsules are stored underwater. Underwater storage of the capsules provides necessary radiation shielding for the worker protection and cooling for the capsules. Capsule storage, maintenance, and management operations are designed to maintain structural integrity and, therefore, ensure that the sealed capsules will not rupture or leak.

WESF has been designed and constructed to isolate and maintain confinement of the encapsulated mixed waste during normal storage conditions as well as in the event of a natural phenomenon or manmade accident over the design life of the facility. WESF storage and maintenance operations are designed to protect human health and the environment from the encapsulated mixed waste.

Please note that the terms "mixed waste" and/or "waste", when used in this document, refer to dangerous waste or hazardous waste, as applicable.

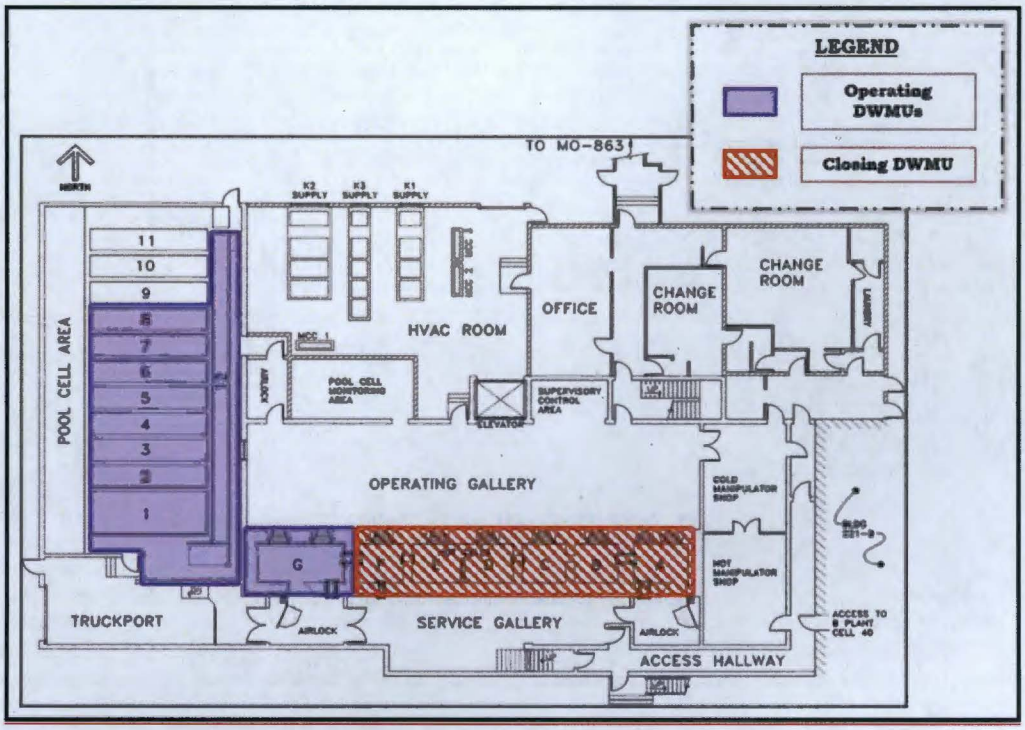

Figure C-1. WESF 225-B Building First Floor Plan

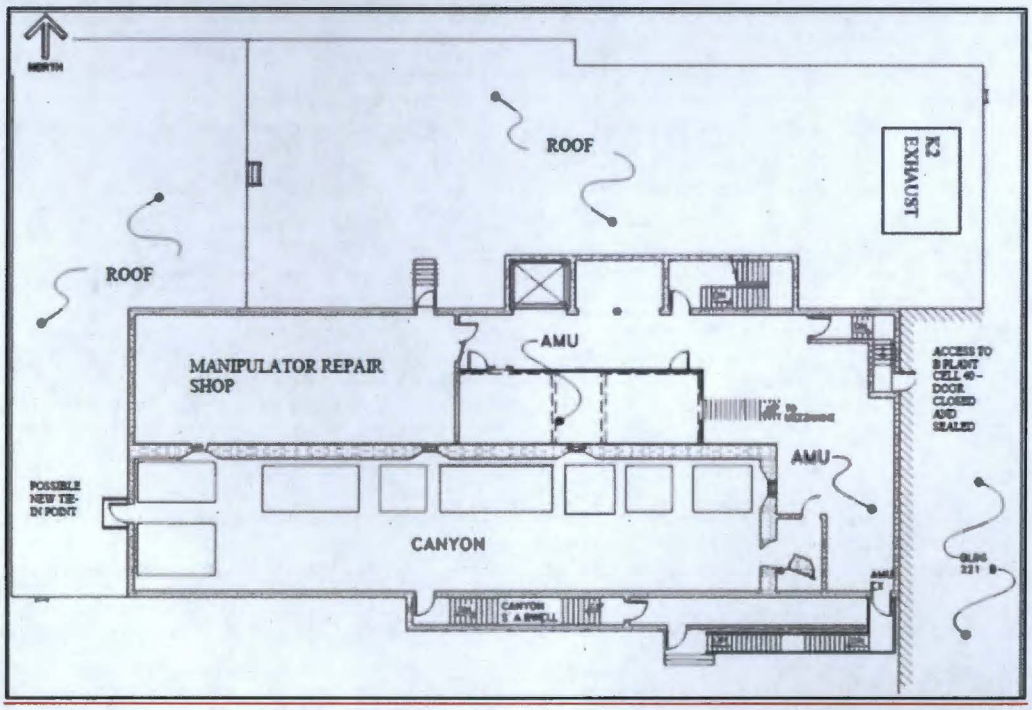

Figure C-2. WESF 225-B Building Second Floor Plan

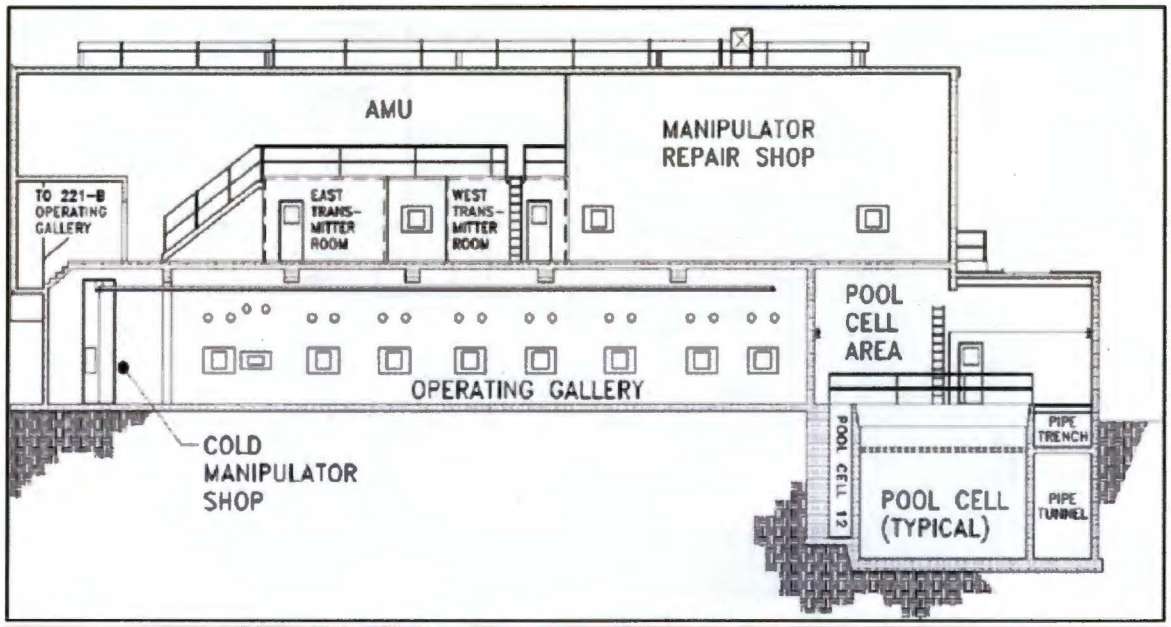

Figure C-3. WESF 225-B Building East/West Sectional View

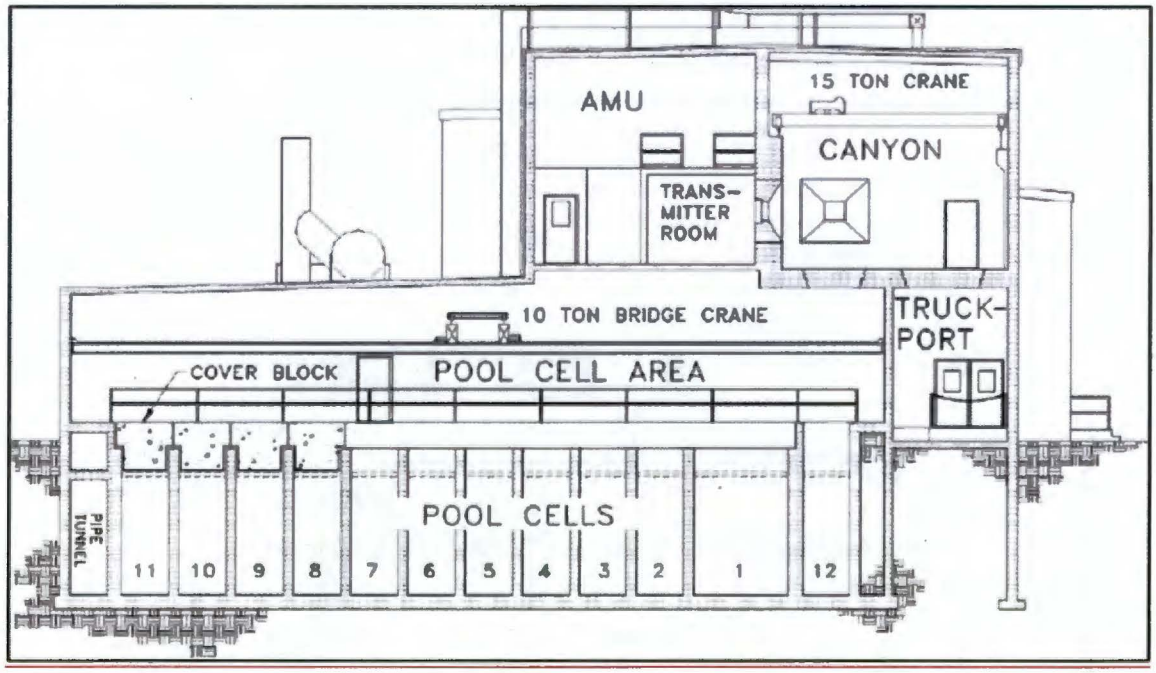

Figure C-4. WESF 225-B Building North/South Sectional View

C1.1 Dangerous Waste Management Unit Descriptions

WESF consists of two operating DWMUs as depicted in Figure C-1. The Hot Cell G and Pool Cells DWMUs remain operational since both are necessary for continued maintenance and storage of the cesium and strontium capsules. The capsules are normally stored underwater which provides radioactive shielding and helps remove heat generated by the capsules. Pool Cells 1, 3 through 7, and 12

(when deemed necessary) store the cesium and strontium capsules, while Hot Cell G provides a dry storage location for suspect or failed capsules.

C1.1.1 Hot Cell G DWMU

Hot Cell G is constructed of high-density concrete with inner dimensions of approximately 4.9 m (16 ft) long by 2 m (8 ft) wide by 4.11 m (13.5 ft) high, with approximately 89 cm (35 in.) thick walls. The floor of the hot cell consists of an approximate 3 cm (1 in.) steel plate across the top of the hot pipe trench, then 0.64 cm (0.25 in.) of lead topped with 17.1 cm (6.75 in.) of high-density concrete, for a total floor thickness of approximately 20 cm (8 in.). The floors and walls are painted with white, radiation and corrosion resistant paint. Removable cover blocks approximately 76 cm (30 in.) thick, top the hot cell, providing access to the canyon through the cell ceiling.

Service piping is embedded in the concrete walls of Hot Cell G. Service piping includes utility services (e.g., air, water, and electricity) that support process equipment operation. A shielded personnel entry door located on the south wall of Hot Cell G allows personnel access into the hot cell from the Hot Cell G Airlock. The door is approximately 2.3 m (7.4 ft) high by 1.2 m (4 ft) wide and 0.91 m (3 ft) thick, consisting of a steel plate frame filled solid with magnetite concrete. The door weighs approximately 10,251 kg (22,600 lb) and is automatically operated by a hydraulic-pneumatic system.

Hot Cell G is equipped with the two pass-throughs with shielding doors for passage of small equipment and solid waste. One is located in the east wall of the hot cell leading to Hot Cell F, while the other transfer drawer is located in the south wall of the hot cell and is accessible from the service gallery (Hot Cell G Airlock). The pass-throughs are approximately 36 cm (14 in.) wide by 46 cm (18 in.) high. As part of the initial closure activities for Hot Cells A through F DWMU (described in the "Waste Encapsulation and Storage Facility Hot Cells A Through F Dangerous Waste Management Unit Closure Plan" located in Part V of the Hanford Facility RCRA Permit), the pass-through leading to Hot Cell F was sealed to prevent grout and any potential contamination from flowing into Hot Cell G.

Two oil filled, lead glass windows are located on the north wall of Hot Cell G (Figure C-5). These windows provide for shielding and direct viewing into the hot cell from the operating gallery. The viewing windows are composed of approximately 25 cm (10 in.) of 3.3 g/cm^3 lead glass (hot cell side) and 39.6 cm (15.6 in.) of 6.2 g/cm^3 lead glass (operating gallery side). The oil barrier separating the glass sections allows light to pass through the windows for viewing purposes. The soft lead glass is protected by cerium stabilized, nonbrowning, tempered glass on the hot cell side and tempered glass on the operating gallery side.

Hot Cell G has wall ports for four manipulators on the north wall of the cell leading to the operating gallery (two at each Hot Cell G viewing window as shown in Figure C-5). The manipulators can be installed or removed from the cell through approximately 25 cm (10 in.) diameter ports in the wall. All four manipulators are active and remain functional to support Hot Cell G operations.

Mechanical manipulators are designed to reproduce the natural movements and forces of the human hand and arm. The manipulators are equipped with a flexible booting that fits over the slave tong body and wrist. This booting protects the slave end from gross contamination and the corrosive cell atmosphere, while providing an air barrier between the hot cell and the operating gallery. Manipulators were originally installed in the hot cells to support encapsulation and maintenance operations, allowing process personnel to work remotely in the hot cell while operating the equipment from the operating gallery; therefore, protecting the workers from high levels of radiation and contamination.

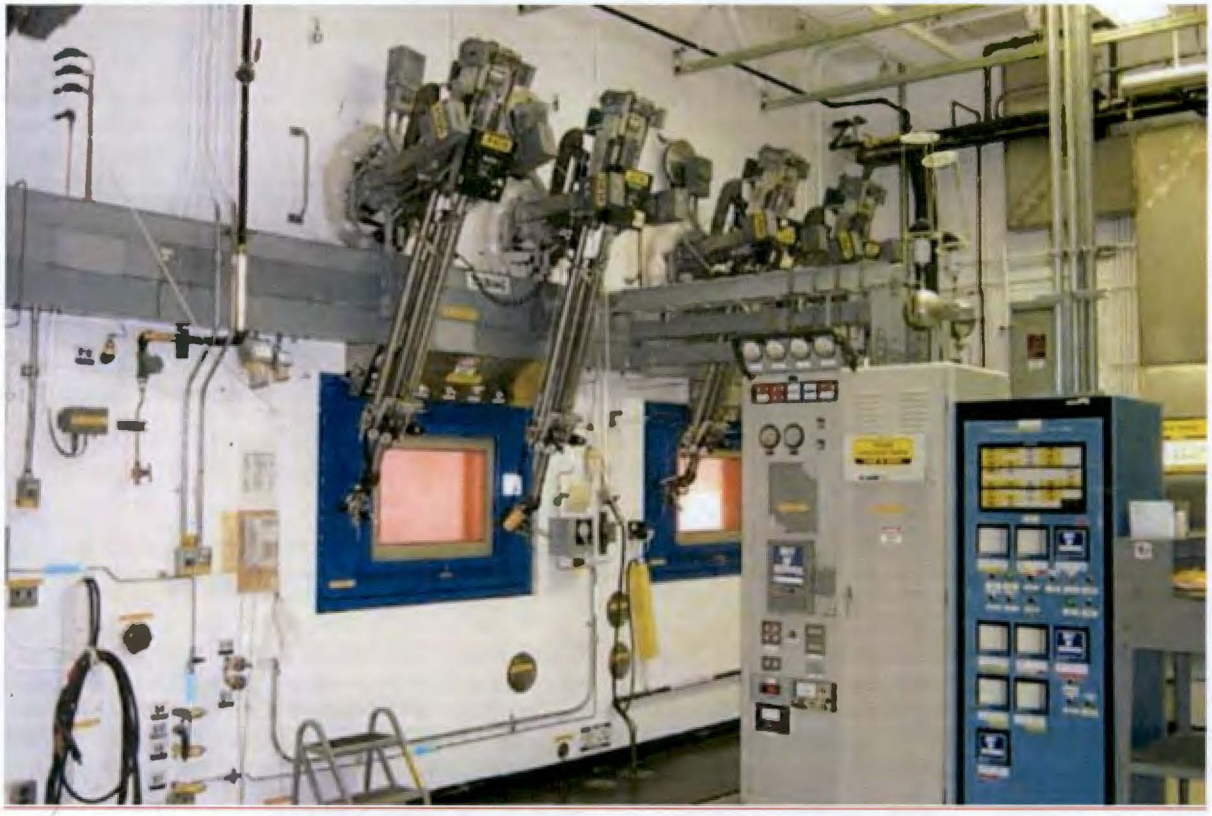

Figure C-5. Hot Cell G Windows and Manipulators (June 2001)

Hot Cell G contains a 2-ton capacity hoist that is controlled from the operating gallery. There is also an approximate 0.6 m (2 ft) wide by 0.9 m (3 ft) long by 1 m (4 ft) high inspection table located in Hot Cell G in close proximity to northern cell wall near the west viewing window.

A penetration through the northwestern corner of the Hot Cell G floor leading into Pool Cell 12 provides the capability to transfer capsules between the two areas via a manually operated transfer cart and trolley system. The capsule transfer chute, which houses the transfer cart, is approximately 14 cm (5.5 in.) in diameter and penetrates through the floor at an angle, extending several inches above the cell floor. The portion of the capsule transfer chute that is above the cell floor has been cut in half to serve as a cradle for the transfer cart and capsule.

G-7 shielded storage, located on the floor next to the northern cell wall between the hot cell viewing windows, can be used to store up to nine failed capsules. The shielded storage lid is operated pneumatically and contains a locking mechanism to prevent inadvertent opening of the lid. The shielded storage device is approximately 81 cm (32 in.) in diameter and 110 cm (42 in.) high and weighs approximately 5,440 kg (12,000 lb).

An approximate 30 cm (12 in.) wide by 41 cm (16 in.) long by 13 cm (5 in.) open-topped, stainless steel lined sump is recessed in the floor of Hot Cell G next to the east wall. A diaphragm pump was installed the fall of 1998 to transfer any liquids collected in the sump to the radioactive low-level waste tank (Tank-100). However, as part of the initial closure activities for the Hot Cells A through F DWMU (described in the "Waste Encapsulation and Storage Facility Hot Cells A Through F Dangerous Waste Management Unit Closure Plan" located in Part V of the Hanford Facility RCRA Permit), all hot cells (including Hot Cell G) were isolated from this tank.

C1.1.1.1 Supporting Systems

Fire Protection System. Hot Cell G is equipped with a manually activated water spray fire protection system that can be actuated from the operating gallery. Raw water supplies the fixed and manipulator directed spray nozzles within the hot cell. Hot Cell G also contains a heat detection system that, when activated, alarms within the building as well as through the fire alarm panel notifying the Hanford Fire Department.

K3N Ventilation System. The ventilation system at WESF is designed to produce pressure boundaries that prevent migration from areas with high potential for contamination with radioactive particulates to areas with less potential for contamination to the atmosphere. Areas with high potential for contamination are maintained at a negative pressure with respect to uncontaminated areas; therefore, air flows from areas of lower potential contamination to areas of higher potential contamination. There are four separate supply systems and three separate exhaust systems that service the confinement areas at WESF. Hot Cell G is ventilated by the K3N exhaust ventilation system (Figure C-6), which also ventilates the canyon as well Tank-100.

The K3N exhaust fan draws air from the canyon and Hot Cell G, passing it through the K3N high-efficiency particulate air (HEPA) filters before it exits through the monitored 296-B-10 stack. The K3N system consists of a filter housing with two redundant exhaust fans. The filter housing includes two HEPA sections in series with each HEPA section consisting of six individual HEPA filters.

C1.1.2 Pool Cells DWMU

The pool cell area, located on the west end of the 225-B Building, is approximately 10 m (34 ft) wide by 22 m (72 ft) long by 4.0 m (13 ft) high (Figure C-1). The pool cell area has 12 pool cells that support underwater storage of the cesium and strontium capsules; however, only Pool Cells 1 through 8 and 12 comprise the Pool Cells DWMU. (Note: Information pertaining to Pool Cells 9, 10, and 11 has been added for informational purposes only.)

All pool cells are constructed of reinforced structural concrete with stainless steel liners. The pool cell liners are constructed of 16-gauge type 304 stainless steel on the sides of the pool cells, while the flooring is constructed of 14-gauge type 304 stainless steel. The pool cell walls are approximately 30 cm (12 in.) thick, while the pool cell floors are approximately 23 cm (21 in.) thick (with the exception of Pool Cell 12 which is approximately 46 cm [18 in.] thick).

Pool Cell 1 is approximately 2.67 m (8.75 ft) wide by 6.629 m (21.75 ft) long and 5.5 m (18 ft) deep. Pool Cells 2 through 11 are approximately 1.35 m (4.42 ft) wide by 6.629 m (21.75 ft) long and 5.5 m (18 ft) deep. Pool Cell 12 is approximately 0.9 m (3 ft) wide by 19.79 m (64.92 ft) long and 4.72 m (15.5 ft) deep. Pool Cell 12 runs along the east end of Pool Cells 1 through 11 and contains a cask pit located at the southern end of the pool. The cask pit is approximately 1.35 m (4.42 ft) wide by 2.26 m (7.42 ft) long and 5.5 m (18 ft) deep.

The pool cell pipe tunnel runs along the west side of Pool Cells 1 through 11 and the north side of Pool Cells 11 and 12. The pipe tunnel is approximately 2.3 m (7.5 ft) wide by 21.8 m (71.5 ft) long and 3.734 m (12.25 ft) deep as it runs along the west side of Pool Cells 1 through 11, and approximately 8.153 m (26.75 ft) wide by 1.09 m (3.58 ft) long and 3.734 m (12.25 ft) deep as it runs along the north side of Pool Cells 11 and 12 with a section that is approximately 0.9 m (3 ft) wide by 1.32 m (4.33 ft) long. The approximately 0.3 m (1 ft) thick pipe tunnel ceiling is the floor of the pool cell pump trench, which contains the pool cell circulation pumps. All dimensions of the pump trench are the same as the pipe tunnel except for the depth, which is 1.5 m (5.0 ft). The top of the pool cell pump trench is the floor of the pool cell area.

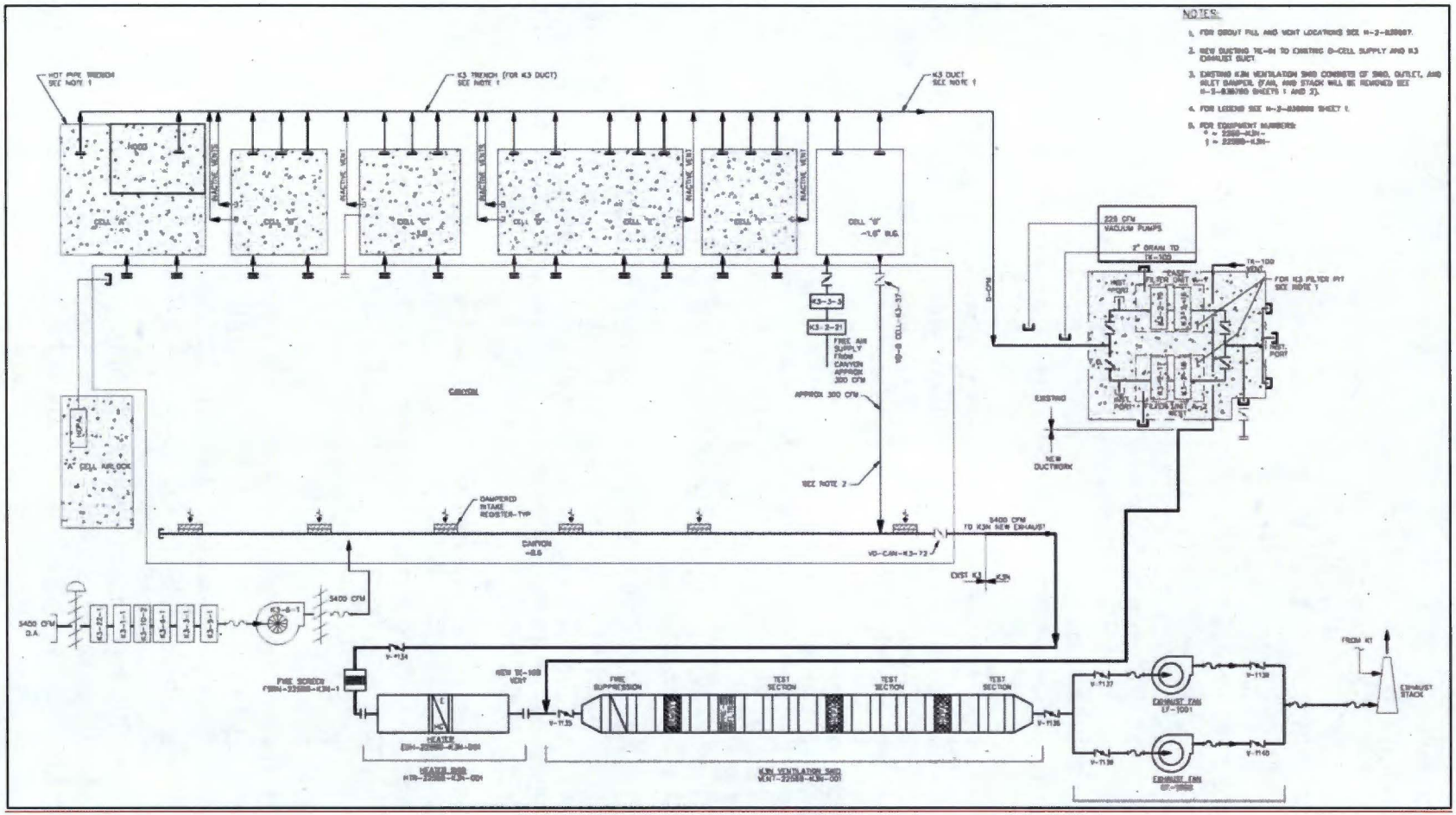

Figure C-6. K3N Process Flow Diagram

There are three personnel access doors, approximately 0.9 m (3 ft) wide by 2 m (7 ft) high, in the pool cell area. There is an access door located on the east wall, which leads to the operating gallery through an airlock. Another access door is located on the south wall, which leads to the truckport. The final access door is located in the northeastern corner of the pool cell area and leads to the outside. This access door is normally kept closed for ventilation control; however, the door can be opened in the event of an emergency to provide for passive ventilation of the pool cell area.

C1.1.2.1 Pool Cell Transfer Ports and Piping

Transfer Ports

Transfer ports (i.e., manually operated ball valves) connect Pool Cells 1 through 11 to Pool Cell 12 and are used to transfer capsules or water between the pool cells. Each transfer port is located approximately 0.9 m (3 ft) above the pool cell floor and contains a manual indicator which displays the valve position (open versus closed).

Pool Cell Circulation Lines

Each pool cell has a stainless steel circulation line that is approximately 7.6 cm (3.0 in.) in diameter. This line extends horizontally from the pool cell distribution header through the pool cell liner and wall into the pipe tunnel before curving upward, extending vertically through the pipe tunnel ceiling where it connects to the pool cell heat exchanger. A simplified schematic of the pool cell circulation lines is shown in Figure C-7.

Pool Cell Drain Lines

Approximately 1 cm (0.5 in.) above each pool cell floor there is an abandoned stainless steel drain line that is approximately 5 cm (2 in.) in diameter. Each pipe runs through the pool cell liner and wall into the pipe tunnel before curving upward and extending vertically where it embeds in the pipe tunnel ceiling. A simplified schematic of the pool cell drain lines is shown in Figure C-7.

Pool Cell 12 Fill Pipe

A schedule 40 painted carbon steel fill pipe extends from Pool Cell 12, through the metal cover plate located on the north end of Pool Cell 12, and through the north wall of the pool cell area just west of the personnel access door. The fill pipe is approximately 6.4 cm (2.5 in.) in diameter and has a total length of less than 2 m (7 ft). There are no plugs or valves associated with the fill pipe, except for the dust cap, which covers the standard fire hose connection on the outside end of the pipe.

C1.1.2.2 Pool Cell Monitoring Equipment and Systems

Temperature Monitoring, Heat Exchanger, and Cooling Systems

The pool cells are equipped with water temperature indicators and alarms. Water temperatures are displayed and controlled in the pool cell monitoring area adjacent to and accessible from the operating gallery (Figure C-1).

To remove heat generated by the capsules, Pool Cells 1 and 3 through 7 are each equipped with a heat exchanger and circulation pump that continuously circulates the pool cell water (Figures C-7 and C-8). The circulated water passes through a spiral heat exchanger and is then returned to the bottom of the pool cell via three distributors. This system helps remove heat generated by the capsules. Pool Cell 12 also has a circulation system that continuously circulates the pool cell water; however, instead of using a heat exchanger, heat is removed using the pool cell closed loop cooling system (CLCS) or a backup once-through cooling system using raw water and the existing pool cell heat exchangers.

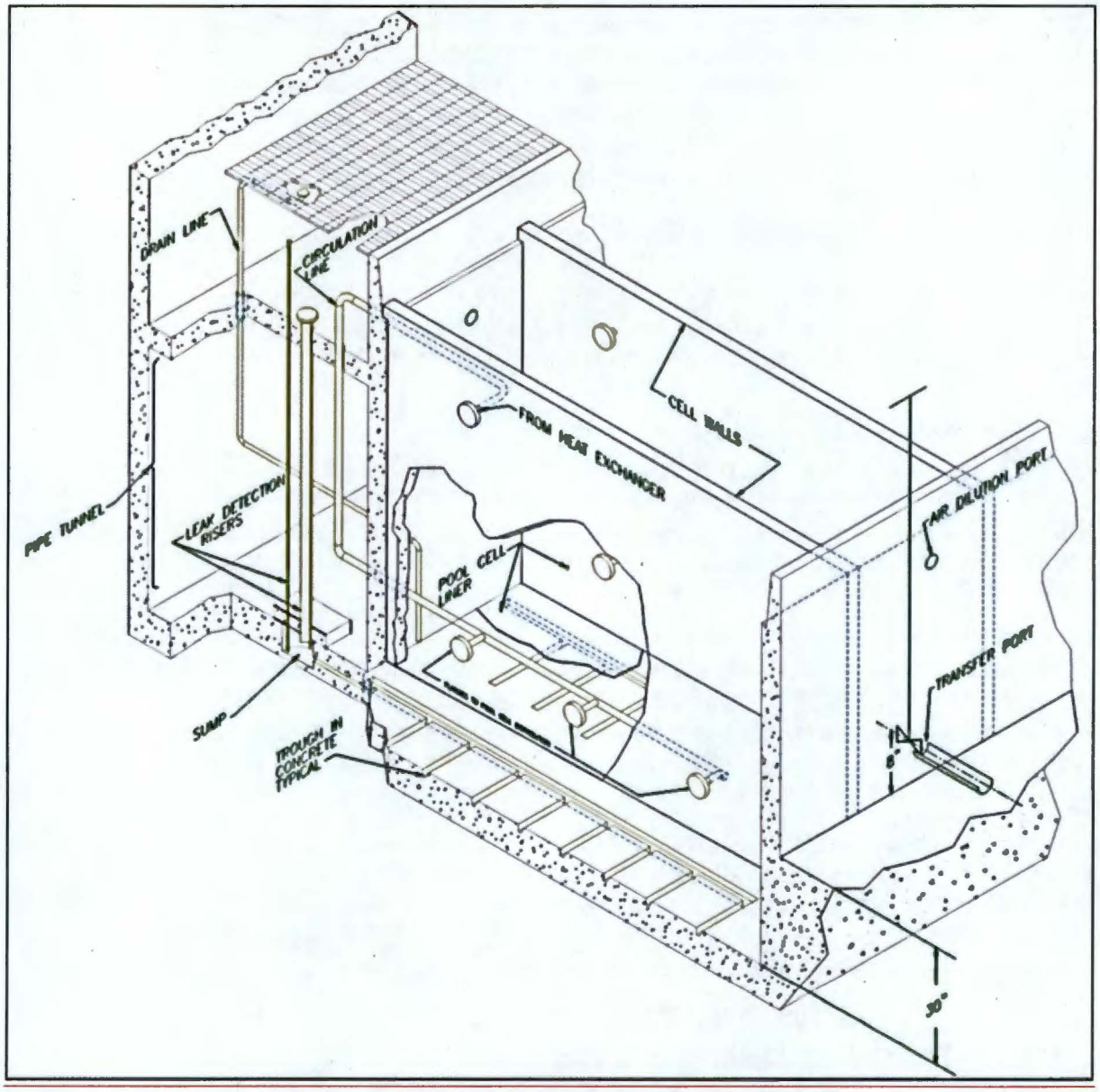

Figure C-7. Pool Cell Circulation and Drain Lines

The CLCS circulates water from the outlet of the wet surface fluid coolers (WSFCs), through pool cell heat exchangers, back to the inlet of the WSFCs using two circulation pumps located in building 225-BG. Only one of the two 480 V, 100 HP circulation pumps is required to be in operation to supply the necessary flow. Three WSFCs are provided to transfer heat removed from the pool cell heat exchangers to the atmosphere.

If the CLCS is unavailable, raw water along with the existing pool cell heat exchangers may be used as an alternate once-through cooling system. The once-through raw water system discharges to the Treated Effluent Disposal Facility.

Pool Cell Water Leak Detection System

Each pool cell has a sloped leak collection system under the stainless steel liner. The individual collection systems for Pool Cells 1 through 11 each drain to a collection sump located in the pipe tunnel (Figure C-7). The system for Pool Cell 12 contains two collection sumps: one is located to the east, while the other is located to the southwest of the pool cell.

The collection system in Pool Cell 1 consists of 10 troughs, which feed to the central trough from each side. An approximate 2.5 cm (1.0 in.) drain line at the west end of Pool Cell 1 runs under the pipe tunnel floor to the collection sump, which is approximately 51 cm (20 in.) in diameter and 30 cm (12 in.) deep. The collection sump is constructed of stainless steel covered with approximately 15 cm (6.0 in.) of reinforced concrete. An approximate 2.5 cm (1.0 in.) line extends from the collection sump to the west underneath the grating and is used to remove water from the collection sump. An approximate 15 cm (6.0 in.) line travels from the collection sump to the pump trench, which houses a conductivity probe that is used to detect water collected in the sump.

Pool Cells 2 through 11 each have a main collection trough near the north side with 10 feeder troughs, as well as a collection sump that is the same as the sump for Pool Cell 1 (described in the above paragraph).

As mentioned previously, Pool Cell 12 consists of two collection sumps. The collection sump to the east is near the centerline between Pool Cells 6 and 7. A single trough runs through Pool Cell 12, approximately 30 cm (12 in.) from the west wall. This sump collects water from the northern third and middle third of the pool cell, which drain toward each other where the drain line to the collection sump is located. The approximate 2.5 cm (1.0 in.) line for transferring water from the sump lies in the wall between Pool Cells 6 and 7 and ends below the grating to the west of the pool cells. The second collection sump for Pool Cell 12 is located to the south of Pool Cell 1 and to the west of the cask pit portion of Pool Cell 12. This sump collects water from the southern third of Pool Cell 12 and from a single trough in the cask pit portion of the pool cell. The sumps water transfer line also ends below the grating to the west. Each of the collection sumps for Pool Cell 12 have a conductivity probe that is used to detect water collected in the sump. A portable pump is used to remove water collected in either of these two sumps.

Pool Cell Water Level Monitoring System

The pool cells are equipped with differential pressure type water level indicators and alarms. Pool cell water levels are displayed in the pool cell monitoring area adjacent to and accessible from the operating gallery (see Figure C-1). Water levels can also be determined using pool cell weight factor indicators, a manual level indicator, or visual comparison with equipment that has a known documented level in the pool cell.

Pool Cell 12 has a float style level monitor that can be seen from outside the 225-B Building when the personnel access door on the north wall is open. In the event of an emergency that prevents access to the 225-B Building, this monitor would be used for determining the water level.

Deionized Water System

The deionized water system, consisting of two banks of portable columns, is located on the second floor of the Aqueous Makeup Unit (AMU) Area (Figure C-2). Sanitary water enters the in-service bank, flowing through a depth filter and mixed resin bed(s) prior to exiting the system. Water that leaves the system is monitored for chemical purity. One bank of deionizers is normally in-service at a time; however, both banks can be used concurrently if deemed necessary.

Typically, deionized water is stored in an approximately 3,800 L (1,000 gal) storage tank (Tk-210) in the AMU Area. However, deionized water may also be valved to flow directly from the deionizers to the desired area (i.e., pool cells).

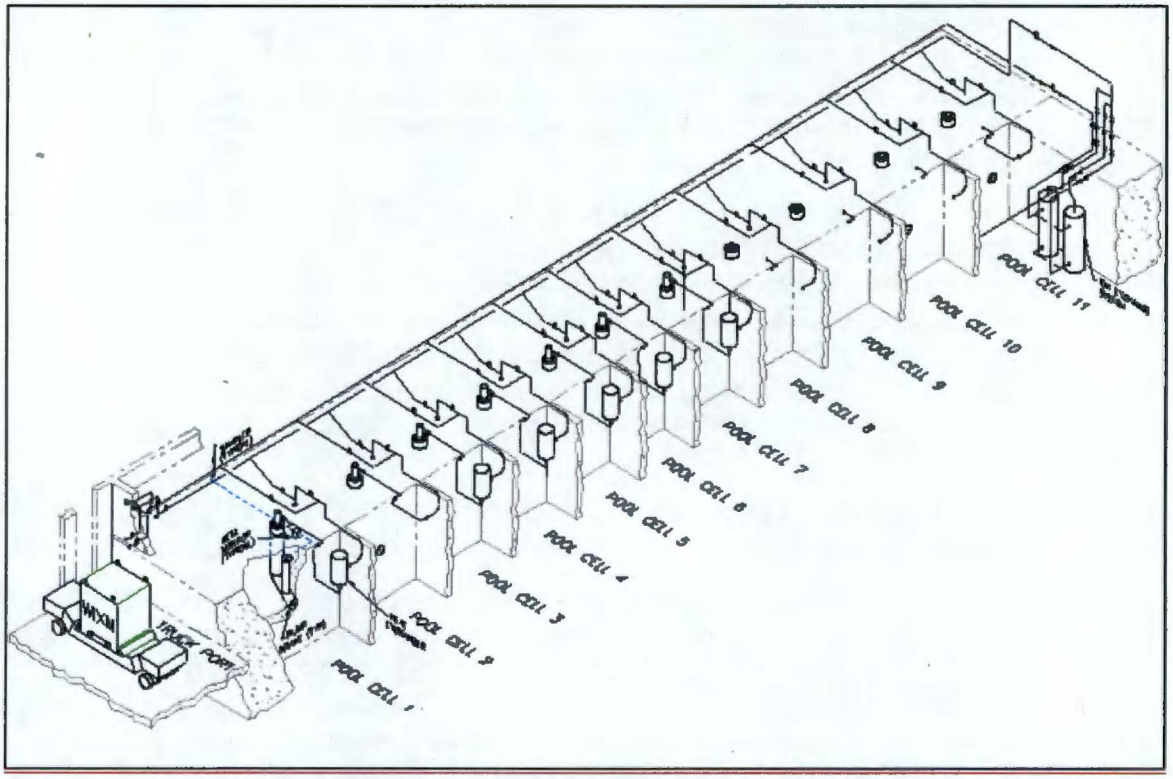

Figure C-8. Isometric Drawing of Pool Cell Systems

Pool Cell Beta Monitoring System

Beta monitors are located in pool cells that store or could potentially store capsules (i.e., Pool Cells 1, 3 through 7, and 12). Each detector monitors a sample line from the circulation pump and passes it into a sample chamber composed of a cerium crystal and photomultiplier tube. The monitor is designed to detect gross beta and gamma radiation in the pool cell water, providing early indication of a capsule leak. Since the dangerous and radioactive components of mixed waste are inseparable, there cannot be a release of dangerous waste or dangerous waste constituents that does not exhibit radioactivity.

Pool Cell Normal Ion-Exchange System

Water from Pool Cells 1, 3 through 7, and 12 is periodically diverted to a deionizing system located in Pool Cell 11. The pool cell water is filtered prior to entering the ion exchange (IX) column(s) containing technical grade mixed-bed IX resin. Impurities in the pool cell water, such as chloride ions, corrosion products, dissolved salts, and solid debris, are removed by the deionizing system. A simplified schematic of the IX system is shown in Figure C-8.

Pool Cell Emergency Ion Exchange System

The emergency IX system provides a method to decontaminate water in the pool cells in the event of a capsule leak. Water from the affected pool cell would be circulated through a WESF ion exchange module (WIXM) located in the truckport. WIXMs are portable, shielded, disposable IX resin units designed to remove radioactive cesium and/or strontium from the water of the affected pool cell. WIXMs consist of a stainless steel IX column and support piping encased in a reinforced concrete shielding block measuring approximately 2.2 m (7.2 ft) long, by 2.2 m (7.2 ft) wide, by 2.7 m (8.8 ft) tall. Once the contaminated water is circulated through the WIXM, the purified water is then returned to the pool cell.

Pool Cell Cleaning System

The pool cell cleaning system uses a sand filter to remove organic and mineral materials from the water. Two different suction assemblies can be used for cleaning:

1) Fixed length skimmer basket assembly consisting of a skimmer basket connected to the pump suction via piping.

2) Hard-piped dual suction assembly that has a short leg acting as a vacuum break and a longer leg with flexible hosing and cleaning head attachments that allows the bottom of the pool cells to be cleaned.

The cleaning system discharge piping for both assemblies is routed back to the pool cell containing the suctions legs, thus, completing the circulation pathway.

Brushes are used to clean algae from the pool cell walls. The remaining debris is then captured and removed by the pool cell cleaning system.

C1.1.2.3 Equipment and Tools

Several other types of equipment and tools are used in the pool cells for capsule movement, examination, storage, and maintenance activities.

Pool Cells 1 and 3 through 7 each contain one small (13 by 13 grid) and two large (18 by 21 grid) capsule storage racks, which store capsules in an upright position in designated locations. Capsules can be transferred underwater between pool cell capsule storage rack locations or to the capsule transfer cart using pool cell tongs. The tongs are also used to perform certain tests and retrieve items that were unintentionally dropped into the pool cells (e.g., pens, badges, and dosimeters).

An underwater camera system, as well as underwater lighting, may be used for viewing the capsules or pool cell structures.

A motorized catwalk, approximately 1.2 m (4.0 ft) wide by 7.6 m (25 ft) long, is located over the pools. The catwalk can travel the full length of the pool cell area, providing access to each of the pool cells for capsule examination, movement, and maintenance activities. There is protective railing on each side of the length of the catwalk for personnel safety. The railing also contains supports for the camera and pool cell tools used during capsule examination and movement activities.

The pool cells have a maintenance platform that is used to perform maintenance on the pool cell heat exchanger(s) and other pool cell systems. The platform is designed so that it cannot fit into a pool cell regardless of the orientation.

C1.1.2.4 Pool Cell Area Ventilation System

The K4 heating, ventilation, and air conditioning (HVAC) system supplies 100 percent outside air to the pool cell area. Outside air is filtered and heated or cooled, as necessary, prior to entering the centrifugal fan which distributes the air to the pool cell area.

The pool cell area is exhausted from the K1 exhaust system, which sequentially passes through one stage of pre-filters, one stage of bag filters, and two stages of HEPA filters. One of two redundant fans exhausts the air from the filter banks through the monitored 296B-10 stack. The K1 exhaust ventilation system prevents hydrogen accumulation by removing radiolytic hydrogen from the pool cell area.

A process flow diagram of the K4 supply and K1 exhaust ventilation systems is shown in Figure C-9.

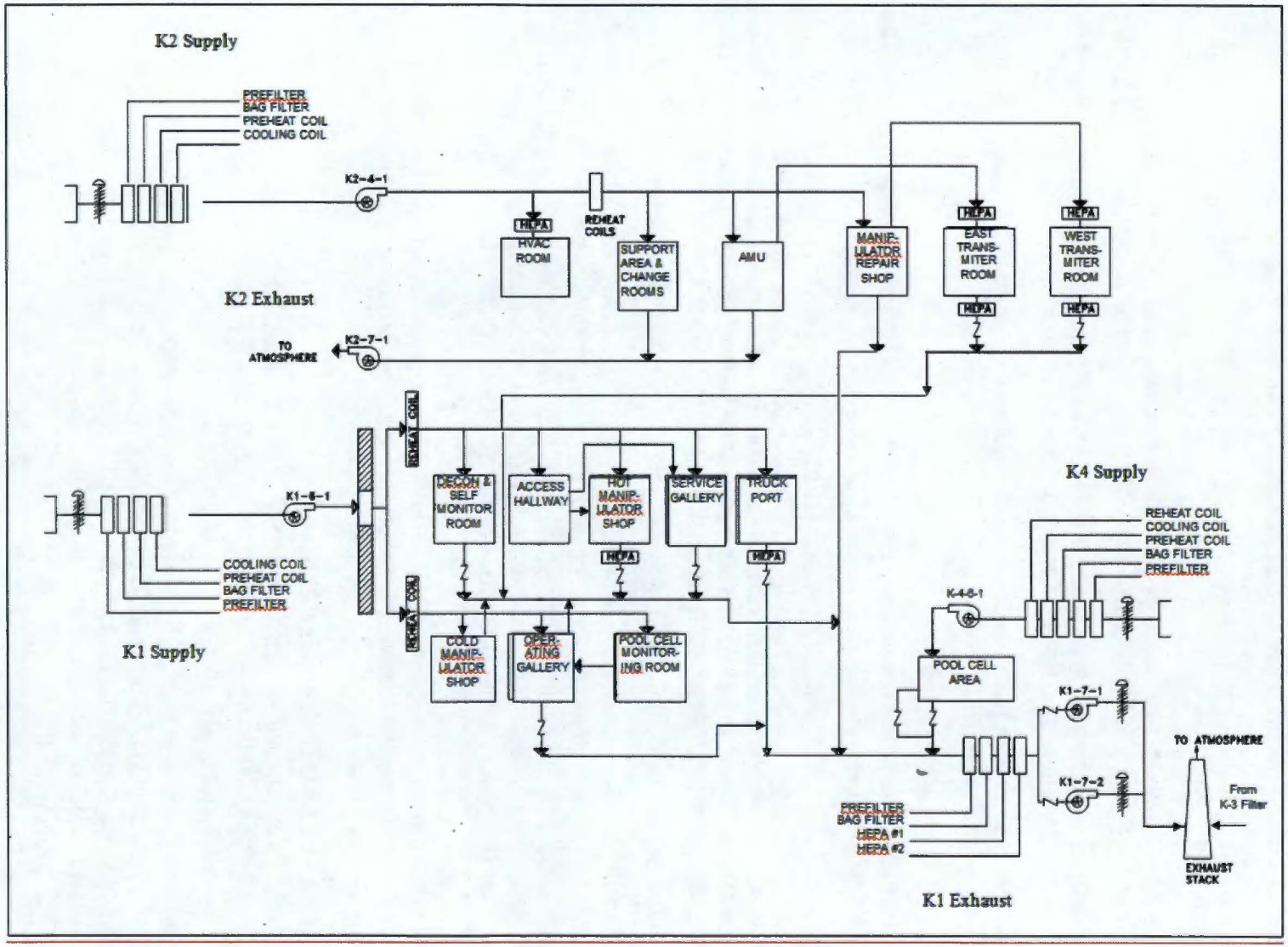

Figure C-9. K1, K2, and K4 Ventilation Systems

C1.2 List of Wastes and Maximum Waste Inventories

Two waste streams are managed at WESF consisting of the cesium chloride and strontium fluoride salts, which are stored within double-walled capsules (further described in Section 0). WESF currently stores 1,936 stainless steel capsules containing radioactive cesium chloride and strontium fluoride salts. WESF does not generate products, have any production processes, nor receive waste from another onsite and/or offsite facility.

For a comprehensive list of waste managed in accordance with *Resource Conservation and Recovery Act of 1976* (RCRA) regulations, including classification and estimated annual quantities, refer to the WESF Part A Form located in Addendum A.

C1.2.1 Hot Cell G DWMU Maximum Waste Inventory

Hot Cell G primarily functions to support contingency operations in the event of a capsule failure via the preferred method of shielded storage (G-7). The shielded storage device can hold a maximum of nine capsules, each containing approximately 1 L (0.264 gal) of cesium chloride or strontium fluoride waste; therefore, the maximum waste inventory of the Hot Cell G DWMU is approximately 9 L (2.38 gal).

C1.2.2 Pool Cells DWMU Maximum Waste Inventory

Pool Cells 1 through 8 and 12 comprise the Pool Cells DWMU. Capsules are stored in capsule storage racks located in Pool Cells 1, 3, 4, 5, 6, and 7. Each of these pool cells contains three capsule storage racks, for a total of 715 capsule storage locations, per pool cell; therefore, the 6 pool cells collectively can hold up to 4,290 capsules.

Even though Pool Cell 12 is normally used for transferring capsules from Hot Cell G to one of the six pool cells (or vice versa), Pool Cell 12 can also be used for temporary capsule storage. The storage capacity of Pool Cell 12 has been calculated by dividing the area of the pool cell floor (approximately 177,450 cm^2 [27,650 $in.^2$]) by the area required to store each capsule horizontally, in a single layer (not stacked) on the pool cell floor (approximately 610 cm^2 [96 $in.^2$]), since there are no capsule storage racks located in Pool Cell 12. Based on these calculations, the storage capacity of Pool Cell 12 is 288 capsules.

Although Pool Cells 2 and 8 are within the Pool Cells DWMU boundary, both of these pool cells are not used for capsule storage. Therefore, combining the storage capacity of Pool Cells 1, 3, 4, 5, 6, and 7 (4,290 capsules) with the storage capacity of Pool Cell 12 (288 capsules) equals the total maximum storage capacity of 4,578 capsules for the Pool Cells DWMU.

Since each capsule contains approximately 1 L (0.264 gal) of cesium chloride or strontium fluoride waste, the maximum waste inventory of the Pool Cells DWMU is approximately 4,578 L (1,209 gal).

C2 Process Information

The WESF mission is to provide continued safe storage of the cesium and strontium mixed waste capsules, including necessary maintenance, examination, decontamination, movement, storage, and surveillance of the capsules. Due to the radioactive component of the mixed waste contents, capsule management practices differ from the standard container management requirements specified in WAC 173-303-630. However, all deviations to the standard requirements are essential for worker protection, as well as maintaining capsule integrity, and are protective of human health and the environment. Capsules are handled, managed, and stored in a manner that reduces the likelihood of potential release of the mixed waste contents as described in the following sections.

DRAFT

~~This page intentionally left blank.~~

DRAFT

~~C. PROCESS INFORMATION~~

~~This addendum discusses the processes used to store waste at WESF. Two waste streams are managed at WESF, which consists of the cesium chloride and strontium fluoride salts that are stored within capsules. The two areas that could store capsules are the pool cells and hot cells.~~

~~WESF will be permitted as a miscellaneous storage unit under WAC 173-303-680. The design of the stainless steel capsules precludes the mixed waste from contact with the pool cell water and monitoring equipment is installed to detect leakage of the mixed waste from the storage capsules. There is no potential for incidental rainwater to enter into the pool cells or hot cells. The hot cells currently have an active managed fire suppression system. Unintended water is not allowed within the pool cell and hot cell operating areas, including fire suppression water.~~

~~WESF pool cells and hot cells have been designed and built to isolate and maintain confinement of the mixed waste during normal storage conditions and in the event of a natural or man-made accident over the design life of WESF.~~

~~C.1 Storage Unit Description~~

~~This section discusses WESF processes that will be involved in the storage operations. All of the mixed waste in storage at WESF originated at WESF. WESF does not receive mixed waste from an onsite and/or offsite facility.~~

~~The pool cell area consists of 12 pools lined with stainless steel. Only Pool Cells 1 through 8, and 12 can be used for capsule storage. The mixed waste capsules are currently stored in Pool Cells 1, 3 through 7, and 12. The pool cells are filled with water to a depth of approximately 4 meters (13 feet) to provide cooling and shielding for the capsules. The hot cell area consists of seven hot cells labeled A through G. The hot cells are constructed of reinforced concrete for shielding and have viewing windows. Activities within the hot cells are performed remotely using manipulators. Only Hot Cells F and G are active for mixed waste capsule storage. Capsules are not normally stored in Hot Cells F or G; but could be placed in either cell for storage or evaluation.~~

~~C.1.1~~C2.1 Description of Capsules

~~The two waste streams consisting of cesium chloride and strontium fluoride are stored in three types of~~ WESF currently stores 1,936 capsules~~ at WESF~~: 1,335 of these capsules contain cesium chloride salt, while the remaining 601 capsules contain strontium fluoride salt. There are three types of cesium and strontium capsules: mixed waste capsules of cesium salts, Type W ~~overpack~~overpacks of mixed waste capsules, and mixed waste capsules of strontium salts. ~~The cesium salts are stored in both the mixed waste cesium capsules and Type W overpack capsules. There are a total of 1,936 cesium and strontium~~ Table C-1 contains design specifications of the capsules in storage~~; 1,335 cesium capsules and 601 strontium capsules~~ at WESF.

Table C-1. Capsule Properties

Capsule Type	Containment Boundary	Material	Wall Thickness[a] (cm [in.])	Outside Diameter (cm [in.])	Total Length (cm [in.])	Cap Thickness (cm [in.])
CsCl Capsule	Inner	316L Stainless Steel	0.241, 0.262, or 0.345 (0.095, 0.103, or 0.136)	5.72 (2.25)	50.102 (19.725)	1 (0.4)
	Outer	316L Stainless Steel	0.277, 0.302, or 0.345 (0.109, 0.119, or 0.136)	6.668 (2.625)	52.769 (20.775)	1 (0.4)
SrF_2 Capsule	Inner	Hastelloy® C-276	0.305 or 0.345 (0.120 or 0.136)	5.715 (2.225)	51.054 (19.05)	1 (0.4)
	Outer	316L Stainless Steel[b]	0.277, 0.302, or 0.345 (0.109, 0.119, or 0.136)	6.668 (2.625)	51.05 (20.10)	1 (0.4)
Type W Overpack	Single	316L Stainless Steel	0.318 (0.125)	8.26 (3.25)	55.436 (21.825)	1 (0.4)

Note: Capsule data are taken from HNF-22687, *WESF Capsule Data Book.*

a. The specified wall thickness of the capsules was changed during production.

b. Some of the initial SrF_2 capsules were made with Hastelloy® C-276 outer capsules.

CsCl = cesium chloride SrF_2 = strontium fluoride

1

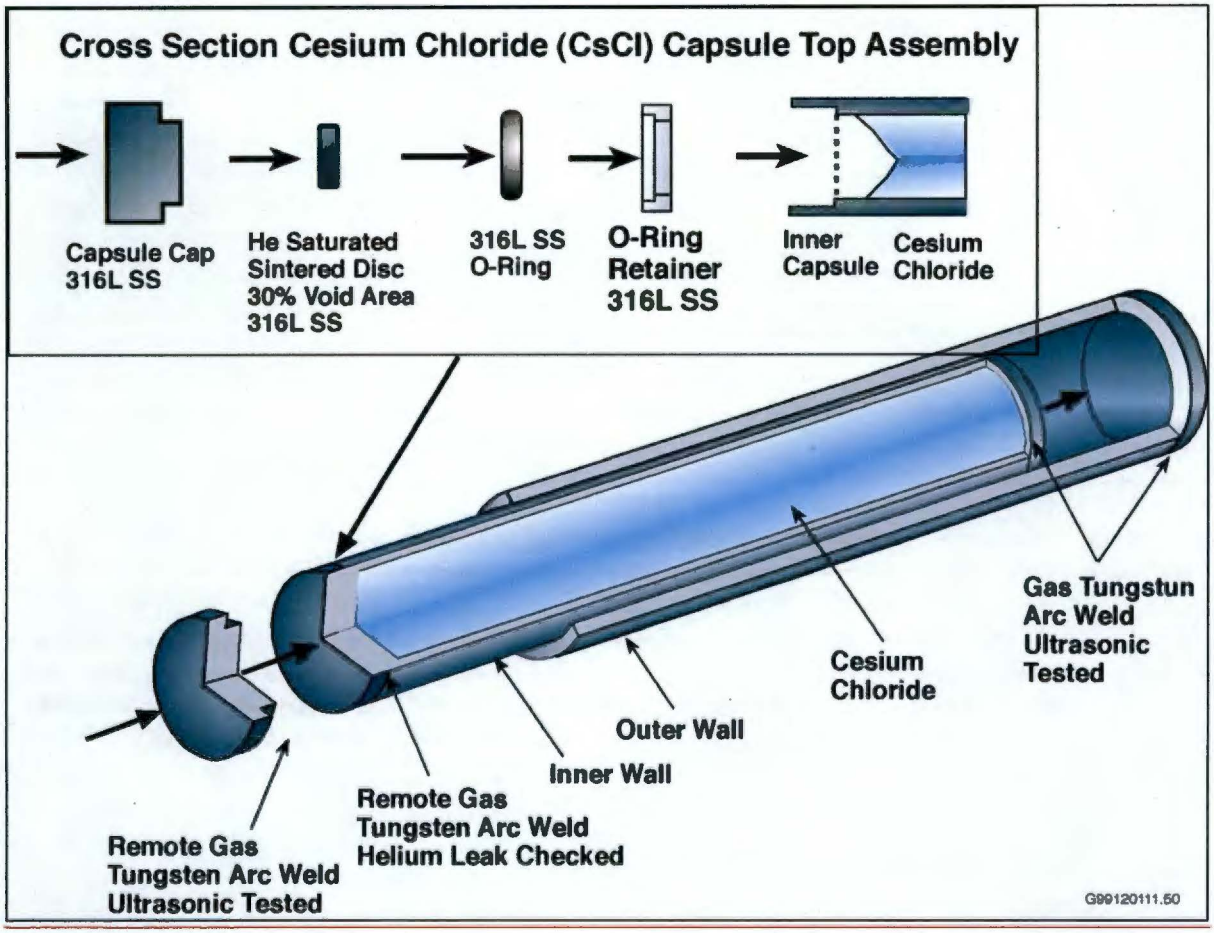

~~C.1.1.1~~Figure C-10. Cesium ~~Capsules~~Capsule

The ~~standard mixed waste~~ cesium ~~capsule consists of a~~capsules are double ~~capsule configuration with one~~walled (i.e., a capsule placed inside another ~~as shown in Figure C.1. Both the cesium inner and outer capsules and end caps are made of 316L~~capsule), stainless steel~~. The inner capsule dimensions are 5.7 centimeters (2.25 inches) in diameter by 50.1 centimeters (19.725 inches) long. The outer capsule is 6.7 centimeters (2.625 inches) in diameter by 52.8 centimeters (20.725 inches) long. There are 1,312 standard mixed waste cesium capsules in storage.~~

~~C.1.1.2 Type W Capsules~~

~~The Type W overpack mixed waste cesium capsule (Figure C.2) is a 316L stainless steel capsule used to contain standard mixed waste cesium capsules that had swollen as a result of thermal cycling, cesium chloride that had been reconfigured into pencils or pellets for use as irradiators, or the contents~~ containers with a length of ~~capsules that had been cut up for examination purposes. The Type W overpack capsule is 8.3 centimeters (3.25 inches) in diameter by 55.4 centimeters (21.8 inches) long. There are 23 Type W capsules in storage.~~

~~C.1.1.3 Strontium Capsules~~

~~Two types of material are used to encapsulate the strontium fluoride. Like the standard cesium capsule, the strontium capsule consists of a capsule within a capsule as shown in Figure C.3. The inner capsule is Hastelloy C-276™. The outer capsule for the majority of strontium capsules is 316L stainless steel and the remaining capsules have a Hastelloy C-276™ outer capsule. The inner capsule is 5.7 centimeters (2.25 inches) in diameter by 48.4 centimeters (19.05 inches) long. The outer capsule is 6.7 centimeters (2.625 inches) in diameter by 55.4 centimeters (21.8 inches) long. There are 601 standard mixed waste strontium capsules in storage.~~

~~C.1.2 Capsule Management Practices~~

~~Pool Cells 1 and 3 through 7 are the primary pool cells used for capsule storage and each of these pools contains one small (13-by-13 grid) and two large (18-by-21 grid) capsule storage racks. Capsules are placed vertically in the storage racks and are stored in~~ approximately ~~4 meters (13 feet) of water for shielding and cooling.~~

~~One or more capsules may be moved from the pool cells to the hot cells for inspection or storage. Using long handled tongs, the capsule can be moved under water from its storage pool location into Pool Cell 12 through a transfer port located~~ 52.769 cm (20.775 in.) and a diameter of approximately ~~1 meter (3 feet) above the pool cell floor. The capsule can then be temporarily stored on the floor or in a rack in Pool Cell 12 or be immediately moved to the hot cells. Capsules are transferred individually to and from Hot Cell G through a transfer chute. The capsule transfer chute is equipped with a trolley device for lowering and raising the capsule. Once in Hot Cell G, the capsules can be transferred into Hot Cell F using manipulators.~~6.668 cm (2.625 in.) (Figure C-10). Strontium capsules have the same general dimensions but consist of a Hastelloy® inner capsule and a stainless steel outer capsule (Figure C-11).

~~C.1.2.1 Removal of Mixed Waste Storage Capsules~~

~~Removal of mixed waste capsules stored within WESF will not be conducted routinely. It is planned that the mixed waste capsules will remain in WESF for storage until a final disposition option becomes available.~~

~~C.1.2.2 Pool Cell Water~~

~~Deionized water from the WESF deionized water system is added to the pool cells periodically to maintain water level due to evaporation.~~

Of the cesium capsules, 23 are referred to as Type W overpacks (Figure C-12). Type W overpacks were fabricated and overpacked at the 324 Building from 1997 to 1999. Of these overpacks, 16 contain degraded cesium capsules, while the other 7 contain containers of cesium chloride that were packaged during cleanout of the 324 Building. Type W overpacks are made of stainless steel and have a length of approximately 55.436 cm (21.825 in.) and a diameter of approximately 8.26 cm (3.25 in.).

WESF encapsulation operations took place between September 1974 and January 1985. First, the cesium chloride or strontium fluoride salt was added to the inner capsule, followed by a sintered metal disk to aid the helium leak check performance test. The capsule was then purged with helium, capped, welded, leak checked to verify integrity of the inner capsule weld, and decontaminated before it was inserted into a stainless steel outer capsule. The outer capsule cap was welded in place, and the weld was examined ultrasonically. Finally, a calorimetry test was performed prior to placing the capsule in storage.

iviv

® Hastelloy is a registered trademark of Haynes International, Kokomo, Indiana.

The Type W overpacks had both a helium leak check and ultrasonic weld inspection on the outer capsule to verify weld integrity.

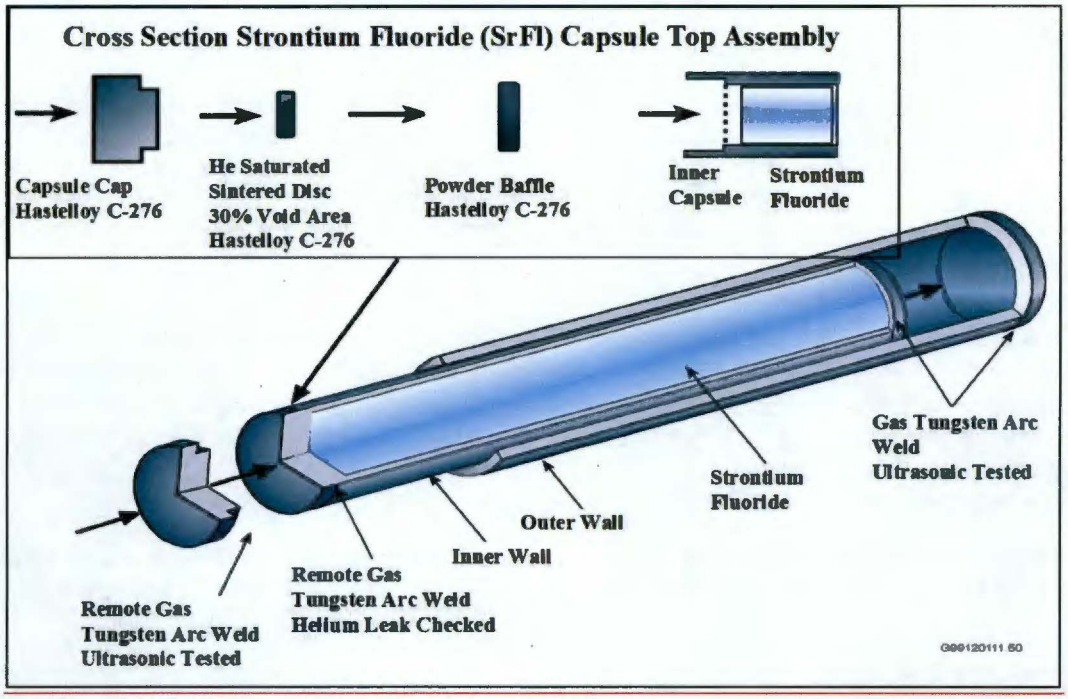

~~C.1.3~~ Figure C-11. Strontium Capsule ~~Labeling~~

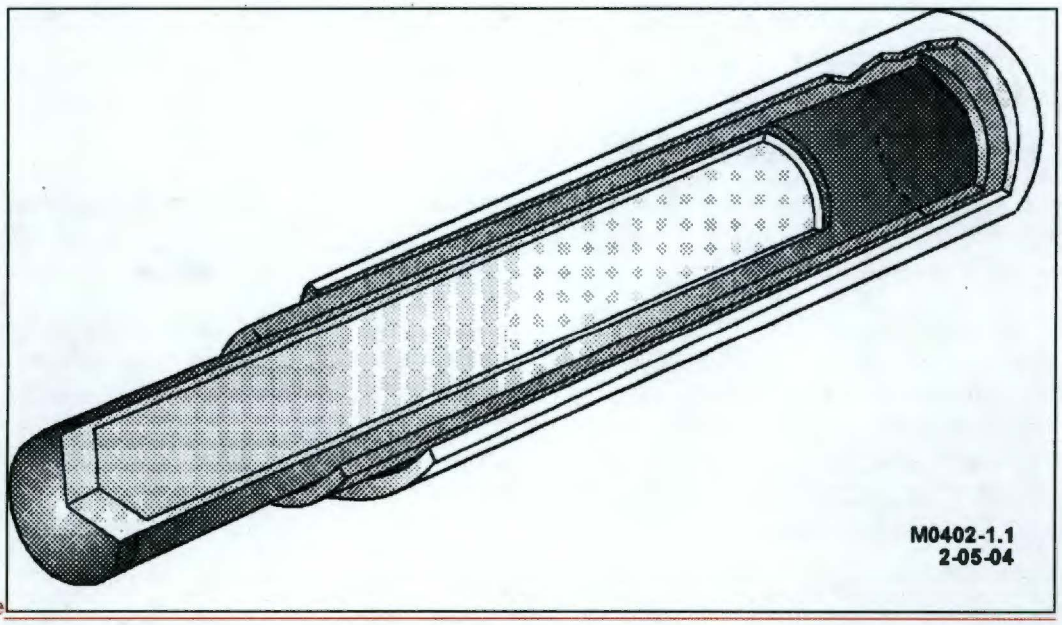

~~The~~

Figure C-12. Type W Overpack (Typical)

All capsules are designed to fit through the transfer chute between Hot Cell G and Pool Cell 12, through the pool cell transfer ports, as well as in the pool cell storage racks. All capsules are marked with a unique identification number and are designed for long-term storage in water.

C2.1.1 Condition

Capsules will be sealed (i.e., welded) at all times. If a capsule is found to have an apparent structural defect, or suspected or determined to have lost its structural integrity, the capsule will immediately be transferred to Hot Cell G to undergo further examination and testing. If it is determined that the capsule is in fact compromised (i.e., leaking), then the capsule will preferably be stored in shielded storage until a full recovery plan is established (e.g., encapsulating in a Type W overpack) as described in Section C2.2.

C2.1.2 Identification and Labeling

Due to the unique characteristics of the capsules and underwater storage configuration, the WESF capsules ~~will~~are not ~~be~~ labeled with traditional ~~hazardous~~dangerous waste or major risk labels~~, but will meet the intent of WAC 173-303-320 with an alternative to standard labeling requirements as described in Permit Addendum E.~~ . However, each capsule has been scribed with a unique identifier for tracking purposes. Capsule contents and corresponding storage locations are documented and maintained in the WESF operating record.

Signs are posted at ~~the~~ personnel entrances to the areas storing mixed waste, identifying any potential hazards in the area~~ to~~. These danger signs satisfy ~~WAC 173-303-320 and WAC 173-303-630.~~applicable requirements of WAC 173-303-320, "General Inspection," and WAC 173-303-630.

C2.1.3 Waste Compatibility

All capsules are constructed of materials that are compatible with the mixed waste being stored, and are designed for long-term storage in water. Capsule materials preclude chemical, electrochemical, or other reactions (e.g., internal corrosion) from occurring. WESF capsules do not exhibit the characteristics of ignitability or reactivity as defined in WAC 173-303-040 as well as WAC 173-303-090(5) and (7), "Dangerous Waste Characteristics."

C2.2 Capsule Management Practices

Capsule storage, maintenance, and management operations are designed to maintain the structural integrity of the double-walled capsules and provide shielding from the radioactive component of the mixed waste contents.

Pool Cells 1 and 3 through 7 are the primary pool cells used to store all of the cesium and strontium capsules. Each of these pools is filled with approximately 4 m (13 ft) of deionized water and contains three capsule storage racks which store capsules in an upright position in designated locations. Each position within the capsule storage racks in the various pool cells has been assigned a unique identifier to readily track the exact location of each individual capsule. Furthermore, all capsule end caps have been scribed with a unique identifier for tracking purposes. Capsule locations are documented and maintained in the WESF operating record.

Pool cells that store capsules are equipped with water level monitoring systems as described in Section C1.1.2.2. Periodically deionized water from the WESF deionized water system (see Section C1.1.2.2) is added to the pool cells to maintain water levels due to water loss attributed to evaporation. In the event of an emergency (e.g., high radiation levels in the pool cell area), water may be remotely added to Pool Cell 12 via the fill pipe located on the outside of the north wall of the pool cell area. Since the pool cell transfer ports are normally kept in an open position, water will flow from Pool Cell 12 into the active pool

cells. However, if the transfer ports are closed, water will overflow through the air dilution ports (Figure C-7) between Pool Cell 12 and the other pool cells.

Capsules may be moved between pool cells or transferred to Hot Cell G for further examination, testing, and/or storage. Pool cell tongs are used to obtain the designated capsule from its storage location (i.e., rack position within the specified pool cell). The capsule is then transported underwater to Pool Cell 12 via the pool cell transfer port. From here, the capsule may be temporarily stored on the pool cell floor, relocated to a different pool cell (via pool cell transfer port) for storage, or transferred to Hot Cell G via the capsule transfer cart.

Hot Cell G DWMU provides the capability to inspect, maintain, and store capsules, as needed, as well as retain the capability for future removal of the cesium and strontium capsules from WESF. All capsule handling operations are performed remotely using mechanical manipulators described in Section **Error! Reference source not found.**.

If a capsule is suspected of leaking, it will be transferred to Hot Cell G where further examination and performance testing will take place. Nonconforming or failed capsules may be overpacked and/or placed in dry storage within Hot Cell G. G-7 shielded storage is preferable for long-term storage of a nonconforming or failed capsule since it provides radiation shielding and, therefore, allows for personnel entry into the hot cell even when suspect or failed capsules are present (refer to Section **Error! Reference source not found.** for further details on G-7 shielded storage). A capsule may also be placed in a rack or on the inspection table inside of Hot Cell G; however, personnel access into the hot cell would be restricted while suspect or failed capsules are present in these locations.

If at any point a capsule is noted as having an identification number that is not clearly visible, the outer capsule will be polished with a capsule scrubber or buffer tool and rescribed with the appropriate identification number in Hot Cell G. Hot Cell G will also continue to provide a location for welding and testing should installation of Type W overpacks onto capsules be required.

C2.2.1 Capsule Handling

Due to the lethal nature of the radioactive component of the mixed waste contents, all capsules are handled remotely using pool cell tongs or mechanical manipulators as mentioned in Section C2.2. The double-walled capsules have been sealed (i.e., welded) and serve as the primary containment of the encapsulated cesium chloride and strontium fluoride mixed waste. Under no circumstances shall the capsules be opened. Capsules will be kept sealed at all times, with their end caps welded in place.

Capsule handling activities are performed by trained and qualified personnel whom meet the requirements specified in WESF Addendum G, "Personnel Training," as denoted in Section 0.

C2.2.2 Aisle Spacing

Cesium and strontium capsules are normally stored underwater in designated pool cells or temporarily stored in Hot Cell G when deemed necessary; therefore, aisle spacing requirements outlined in WAC 173-303-630(5)(c) are not applicable to the capsule storage configuration at WESF. However, the mixed waste capsules are stored in a manner that allows for unobstructed movement of personnel and emergency equipment to any area of the operating facility in the event of an emergency.

C2.2.3 Inspections

Inspections of active storage areas are conducted by qualified personnel trained in accordance with WESF Addendum G to detect any signs of malfunction, deterioration, discharges, or other anomalies that could potentially harm human health or the environment. The content and frequency of inspections are specified in WESF Addendum I, "Inspection Plan."

~~C.1.4~~C2.3 Containment Requirements for Storing Capsules

All capsule storage operations are confined within the WESF 255-B Building. The ~~design~~designs of the ~~pool cell~~Pool Cells and ~~hot cell areas that are directly involved with the handling and storage of mixed waste~~Hot Cell G DWMUs are built to keep exposures ~~to these~~ as low as reasonably achievable ~~(ALARA).~~ . The pool cell and hot cell areas are built to isolate and maintain confinement of the encapsulated mixed waste during normal storage conditions and in the event of a natural or ~~man-made~~manmade accident.

WESF does not store any capsules with free liquids, waste that exhibit ignitability or reactivity, or waste designated as F020 through F023, F026, or F027 ~~(Section J~~; therefore, in accordance with WAC 173-303-630(7)(c), WESF needs not have a containment system as described in WAC 173-303-630(7).

C2.3.1 Controlling Run-On and Runoff

Since the mixed waste capsules are stored underwater in pool cells within the 225-B Building and pool cell water levels are controlled as described in Section C1.1.2.2, run-on is not considered a relevant factor in evaluating the protectiveness of waste storage activities at WESF. However, the 225-B Building design and construction do address precipitation control. The WESF roof, walls, and foundation prevent precipitation run-on from entering the pool cell and hot cell areas; therefore, no precipitation can contact the waste. Since no precipitation can enter the building to contact the waste, no run-off can occur.

~~C.2~~C2.4 Prevention ~~Of~~of Reaction ~~Of~~of Ignitable, Reactive, and Incompatible Waste ~~In~~in WESF

The mixed waste contents of the capsules stored at WESF do not exhibit characteristics of ignitability, reactivity, or incompatibility. Additionally, WESF does not and will not store ignitable, reactive, or ~~waste~~ incompatible waste with the mixed waste~~. The WESF capsules do not contain or generate materials that are explosive, pyrophoric, or chemically reactive. The capsule materials preclude chemical, electrochemical, or other reactions (such as internal corrosion). The WESF~~ capsules ~~will~~. Therefore, WAC 173-303-630(8) and (9) requirements are not ~~exhibit~~applicable to WESF.

C2.5 Air Emissions

This section addresses air emission standards from the ~~characteristics~~following requirements:

- WAC 173-303-690, "Air Emission Standards for Process Vents," incorporated by 40 CFR 264, "Standards for Owners and Operators of ~~ignitability~~Hazardous Waste Treatment, Storage, and Disposal Facilities," Subpart AA, "Air Emission Standards for Process Vents."
- WAC 173-303-691, "Air Emission Standards for Equipment Leaks," incorporated by 40 CFR 264, Subpart BB, "Air Emission Standards for Equipment Leaks."
- WAC 173-303-692, "Air Emission Standards for Tanks, Surface Impoundments, and Containers," incorporated by 40 CFR 264, Subpart CC, "Air Emission Standards for Tanks, Surface Impoundments, and Containers."

C2.5.1 Applicability of Subpart AA Standards

The air emission standards in 40 CFR 264, Subpart AA apply to process vents associated with distillation, fractionation, thin-film evaporation, solvent extraction, or air or steam stripping operations for hazardous wastes with organic concentrations of at least 10 parts per million (ppm) by weight. Since WESF does not have any process vents subject to Subpart AA, these standards do not apply.

C2.5.2 Applicability of Subpart BB Standards

The air emission standards in 40 CFR 264, Subpart BB apply to equipment that contains or ~~reactivity as defined in WAC 173-303-040 and WAC 173-303-090(5~~comes into contact with waste with a total organic concentration of 10 percent by weight or more. Since WESF does not store dangerous waste with associated organic compounds, Subpart BB standards do not apply (see WESF Addendum A for a comprehensive list of waste managed at the facility).

C2.5.3 Applicability of Subpart CC Standards

Air emission standards of 40 CFR 264, Subpart CC apply to tank, surface impoundment, and container storage units that manage waste with average volatile organic concentrations equal to or exceeding 500 ppm by weight, based on the waste composition at the point of origination. However, containers that solely manage mixed waste are exempt per 40 CFR 264.1080(b)(6), "Applicability."

~~C.3~~C3 Analysis ~~O~~of Miscellaneous Unit Regulatory Requirements Pursuant ~~T~~to WAC 173-303-680

~~WAC 173-303-680 requires "~~WAC 173-303-680 requirements state that "a miscellaneous unit must be located, designed, constructed, operated, maintained, and closed in a manner that will ensure protection of the human health and the environment. -Permits for miscellaneous units are to contain such terms and provisions as necessary to protect the human health and the environment~~…"~~…" Waste management process descriptions provided ~~above~~in this addendum describe all essential elements of waste management practices necessary to support the required demonstrations, including requirements of ~~WAC 173-303-680(~~WAC 173-303-680(3).

~~WAC 173-303-680(~~WAC 173-303-680(2)(a) through (c) requires consideration of the potential release or migration of waste or waste constituents to groundwater, surface water, and air. -Since mixed ~~waste~~wastes managed at WESF are in sealed capsules with little~~ or~~, if any, potential for release outside of the outer capsule, explicit consideration of these ~~WAC~~*Washington Administrative Code* sections ~~are~~is not

necessary. -WESF is not seeking to be permitted as a disposal unit~~, so consideration of postclosure care~~; therefore, the requirements of ~~WAC 173-303-680(~~WAC 173-303-680(4) ~~is~~are not ~~necessary.~~applicable.

~~**Figure C.1. Cesium Capsule**~~

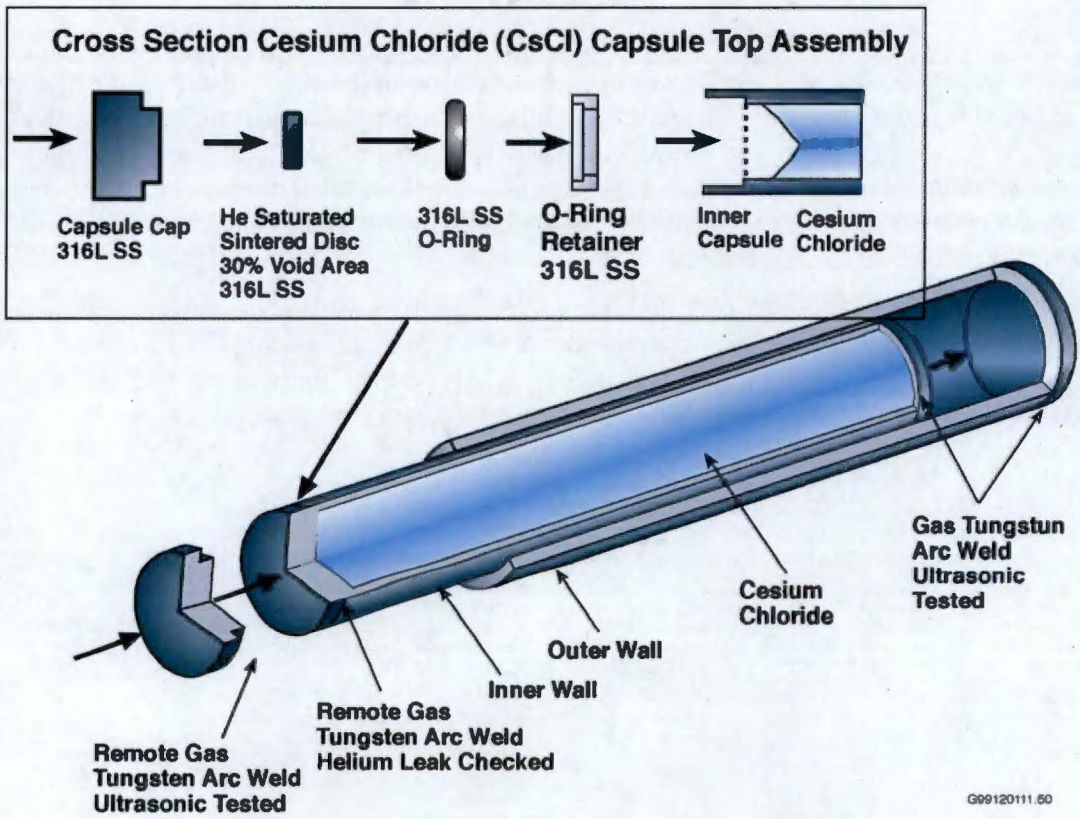

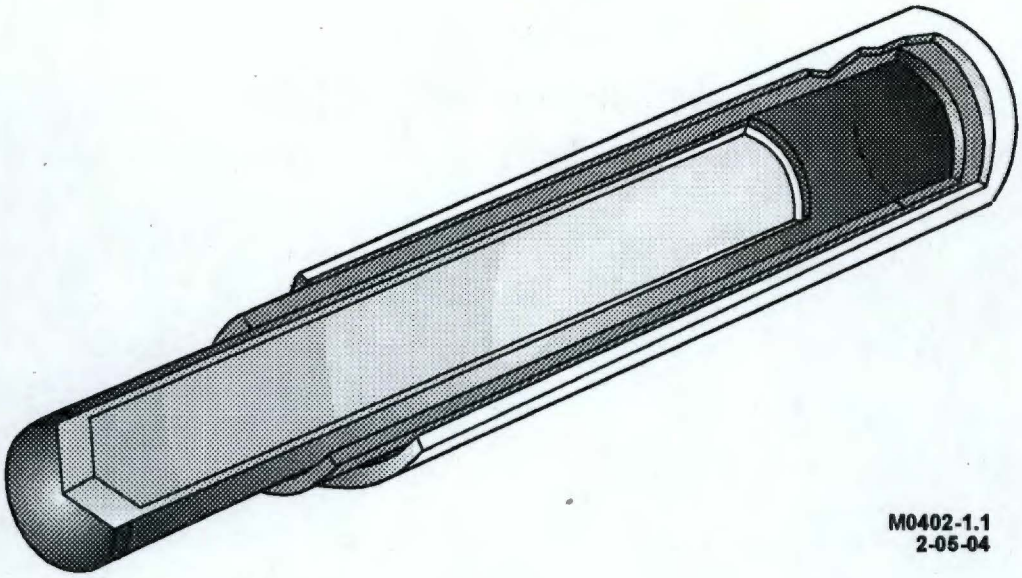

~~Figure C.2. Type W Overpack Capsule (Typical)~~

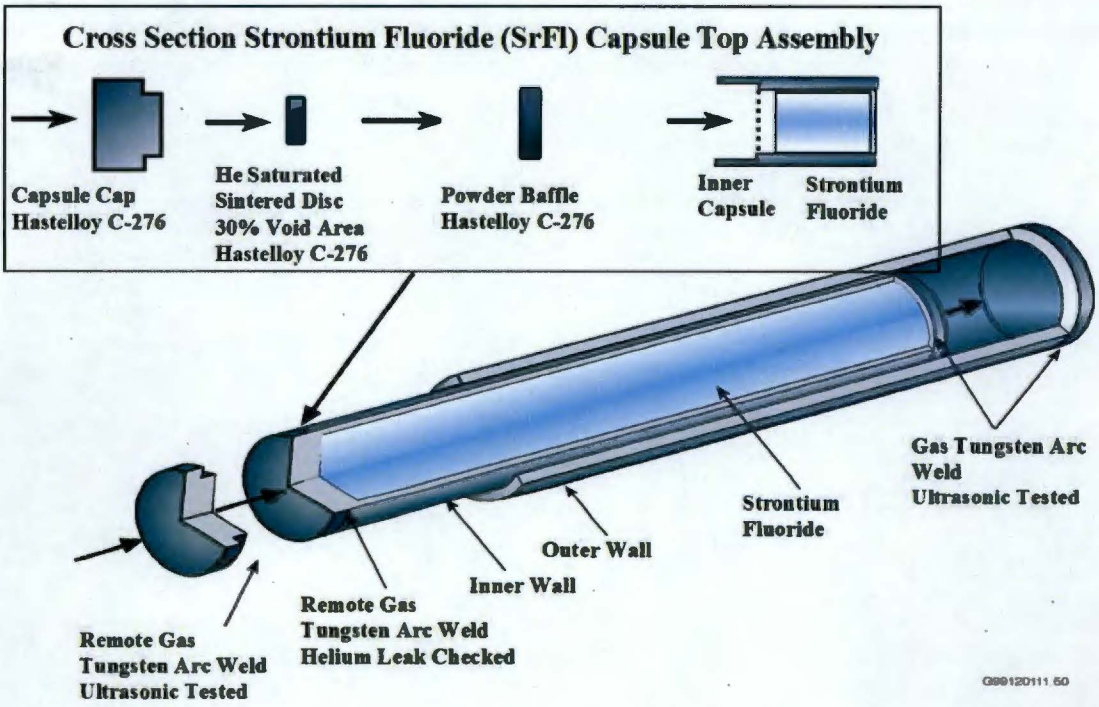

~~Figure C.3. Strontium Capsule~~

C4 ~~This page intentionally left blank.~~Training

For training requirements relative to duties described in this addendum, refer to WESF Addendum G.

This page intentionally left blank.

Addendum E

Security

DRAFT

DRAFT

This page intentionally left blank.

DRAFT

1

DRAFT

~~ADDENDUM E~~

~~SECURITY~~

Contents

~~E. SECURITY REQUIREMENTS ..... E.1~~
~~E.1 Security ..... E.1~~
~~E.1.1 Security Procedures and Equipment ..... E.1~~

DRAFT

~~E SECURITY~~

~~This Addendum discusses security requirements as related to WESF. WESF is operated to minimize exposure of human health and the environment to the mixed waste capsules. Shielding, contamination control, control of toxic or dangerous material, and safety and security procedures will be used to keep exposure ALARA. Shielding will be provided to comply with the ALARA as required by 10 CFR 835.~~

~~The mixed waste is in solid form and placed in stainless steel capsules.~~

~~E.1 Security~~

~~Refer to Permit Attachment 3, Security.~~

~~E.1.1 Security Procedures and Equipment~~

~~Because WESF is located within the portion of the Hanford Facility controlled by the 24-hour surveillance system, WAC 173-303-310 (2)(c) does not apply. In lieu of the signage described in Permit Attachment 3, entrances to portions of WESF used to manage waste are posted with a sign, in English, reading, *DANGER WASTE STORAGE - MAJOR CHEMICAL RISK: TOXIC*. Signs will be visible from all angles of approach, will be legible from a distance of at least 7.6 meters (24.9 feet) and meet the intent of WAC 173-303-310.~~

E1 Security E-1

E2 Security Provisions E-1

E2.1 Access Control E-1

E2.2 Warning Signs E-2

This page intentionally left blank.

E1 Security

This addendum discusses the security requirements relative to the Waste Encapsulation and Storage Facility (WESF) Operating Unit Group and, furthermore, complies with the security requirements set forth in WAC 173-303-310, "Dangerous Waste Regulations," "Security."

WESF is located in the northwestern portion of the 200 East Area of the Hanford Facility, with the main 225-B Building adjoining B Plant on the west end.

WESF operations provide for continued safe storage and maintenance of the 1,936 capsules containing cesium and strontium radioactive mixed waste. The double-encapsulated cesium and strontium salts are stored underwater in various pool cells located in western portion of the 225-B Building. WESF storage operations are designed to protect human health and the environment from the encapsulated mixed waste.

For further details on WESF DWMUs and storage operations, refer to WESF Addendum C, "Process Information."

Please note that the terms "mixed waste" and/or "waste," when used in this document, refer to dangerous waste or hazardous waste, as applicable.

E2 Security Provisions

Since WESF is located within the 200 East Area of the Hanford Facility, additional Hanford Facility security measures are provided as described in WA7890008967, *Hanford Facility Resource Conservation and Recovery Act Permit* (hereinafter called the Hanford Facility RCRA Permit), Attachment 3, "Security." Collectively, these security systems combined with the security measures identified in this addendum prevent unknowing entry and minimize the possibility for unauthorized entry of persons or livestock onto the active dangerous/mixed waste portions of WESF, as required by WAC 173-303-310(1).

E2.1 Access Control

The Hanford Facility maintains surveillance and access controls 24 hours per day, 7 days per week. Three different barricades guarded by armed protective Hanford Patrol forces control vehicular access to the active portions of the Hanford Facility (e.g., WESF) (WAC 173-303-310(2)(c)). Access is limited to authorized individuals displaying appropriate security identification issued only by the U.S. Department of Energy. Continuous surveillance of WESF as well as the entire Hanford Facility is further provided by roving, motorized patrols conducted by Hanford Patrol personnel. The constant presence of protective force personnel provides access controls to active portions of the Hanford Facility, including WESF, thus meeting the requirements of WAC 173-303-310(2)(b).

The Columbia River provides a natural barrier for the northern and eastern portions of the Hanford Facility boundary, while perimeter fencing provides an artificial barrier for the western and southern portions of the Hanford Facility boundary (WAC 173-303-310(2)(c)).

All WESF dangerous/mixed waste management activities are performed within the main 225-B Building, which is kept locked at all times (WAC 173-303-310(2)(c)). Keys to access doors are controlled and accessible only by authorized personnel. All personnel are required to check in with the Shift Operations Manager in the Operating Base prior to beginning any assigned work tasks or scheduled tours of the facility. Visitors must adhere to all personal protection requirements and are subject to escorting protocols.

Personnel training requirements for those individuals whose assigned work tasks directly relate to WESF dangerous/mixed waste management activities are established in WESF Addendum G, "Personnel Training."

E2.2 Warning Signs

Entrances to portions of WESF used to store and manage the mixed waste capsules are posted with danger signs reading, "DANGER WASTE STORAGE - MAJOR CHEMICAL RISK: TOXIC."

Furthermore, danger signs are posted at area boundaries within the Hanford Facility stating, "No Trespassing. Security Badges Required Beyond This Point. Authorized Vehicles Only. Public Access Prohibited." Hanford Facility barricades and perimeter fences are posted with restrictive signage as well.

All posted signage is written in English, visible from all angles of approach, legible from a distance of at least 7.6 m (25 ft), and meets the requirements set forth in WAC 173-303-310(2)(a).

Addendum F

Preparedness and Prevention

DRAFT

DRAFT

This page intentionally left blank.

DRAFT

DRAFT

ADDENDUM F

PREPAREDNESS AND PREVENTION

Contents

F. PREPAREDNESS AND PREVENTION F.1
F.1 Preparedness and Prevention Requirements F.1
F.1.1 Equipment Requirements F.1
F.1.2 Internal Communication F.1
F.1.3 External Communications F.1
F.1.4 Emergency Equipment F.1
F.1.5 Water for Fire Control F.1
F.2 Preventive Procedures, Structures, And Equipment F.2
F.2.1 Unloading Operations F.2
F.2.2 Runoff F.2
F.2.3 Water Supplies F.2
F.2.4 Equipment and Power Failure F.2
F.2.5 Personal Protection Equipment F.2
F.3 Prevention of Reaction of Ignitable, Reactive, and Incompatible Waste F.2

DRAFT

F1 Preparedness and Prevention F-1

F2 Preparedness and Prevention Requirements F-1

F2.1 Equipment Requirements F-1

F2.1.1 Communication Systems F-2

F2.1.2 Emergency Equipment F-3

F2.1.3 Water for Fire Control F-4

F3 Preventive Procedures, Structures, and Equipment F-4

F3.1 Unloading Operations and Aisle Spacing Requirements F-4

F3.2 Prevention of Run-On, Run-Off, and Contamination to Water Supplies F-4

F3.3 Equipment and Power Failure F-4

F3.4 Personal Protection Equipment F-5

F4 Prevention of Reaction of Ignitable, Reactive, and Incompatible Waste F-5

F5 Arrangements with Local Authorities F-6

DRAFT

This page intentionally left blank.

DRAFT

~~F. PREPAREDNESS AND PREVENTION~~

~~This Addendum discusses preparedness and prevention requirements; preventive procedures, structures, and equipment; and prevention of reaction of ignitable, reactive, and incompatible waste as related to Waste Encapsulation and Storage Facility (WESF).~~

~~WESF is operated to minimize exposure of human health and the environment to the mixed waste capsules. Shielding, contamination control, control of toxic or dangerous material, and safety and security procedures will be used to keep exposure ALARA. Shielding will be provided to comply with the ALARA as required by 10 CFR 835.~~

~~The mixed waste is in solid form and placed in stainless steel capsules.~~

~~F.1 Preparedness and Prevention Requirements~~

~~The following sections describe the preparedness and prevention measures to be taken at WESF.~~

F1 Preparedness and Prevention

This addendum addresses the preparedness and prevention measures in effect at the Waste Encapsulation and Storage Facility (WESF) Operating Unit Group and, furthermore, complies with the requirements set forth in WAC 173-303-340, "Dangerous Waste Regulations," "Preparedness and Prevention," WAC 173-303-806(4)(a)(viii), "Final Facility Permits;" and WAC 173-303-395(4), "Other General Requirements."

WESF is located in the northwestern portion of the 200 East Area of the Hanford Facility, with the main 225-B Building adjoining B Plant on the west end. The 225-B Building houses the WESF dangerous waste management units (DWMUs), two of which are operating: Hot Cell G and Pool Cells.

WESF operations provide for continued safe storage and maintenance of the 1,936 capsules containing cesium and strontium radioactive mixed waste. The double-encapsulated cesium and strontium salts are stored underwater in various pool cells located in western portion of the 225-B Building. WESF storage operations are designed to protect human health and the environment (HHE) from the encapsulated mixed waste.

For further details on WESF DWMUs and storage operations, refer to WESF Addendum C, "Process Information."

Please note that the terms "mixed waste" and/or "waste", when used in this document, refer to dangerous waste or hazardous waste, as applicable.

F2 Preparedness and Prevention Requirements

WESF is designed, constructed, maintained, and operated to minimize the possibility of fire, explosion, or any other unplanned natural phenomenon or manmade incident that could cause unintentional release of dangerous waste or dangerous waste constituents to the air, soil, surface water, or groundwater which could threaten HHE. The following subsections describe preparedness and prevention measures to be taken at WESF, which help avoid or mitigate such situations.

~~F.1.1~~F2.1 Equipment Requirements

~~The following sections describe the internal and external communications systems and the emergency equipment required that could be activated by the WESF Building Emergency Director (BED).~~

The following communications equipment, fire suppression systems and equipment are available for use at WESF, in accordance with the requirements of WAC 173-303-340(1). All communications, alarm/notification, and fire protection equipment and detection systems are tested and maintained to assure proper operation in time of emergency (WAC 173-303-340(1)(d)).

F2.1.1 Communication Systems

~~F.1.2~~*F2.1.1.1 Internal Communication*

~~At WESF~~WESF is equipped with internal communications devices used to provide immediate emergency instruction to onsite personnel. Communications devices described in this section meet the internal communications requirements of WAC 173-303-340(1)(a), (1)(b), and (2)(a).

Onsite internal communication systems consist of alarms and notification systems, telephones ~~capable of~~, hand-held two-way radios, and a public address ~~are used for internal communication and are~~ system interfaced for voice paging throughout the facility (WAC 173-303-340(1)(a)).

The following audible alarm systems are available to provide warnings to WESF personnel:

- A fire detection system with audible alarms is located throughout the ~~facility.~~225-B Building providing personnel notification to evacuate. For further details on fire detection systems refer to Section F2.1.2.1.
- ~~Personnel~~Manual fire alarm pull boxes are located throughout WESF. Activation of manual fire alarm pull boxes triggers an audible fire alarm.
- Manually actuated take cover alarms are located in the Operations Base (225-B Building) as well as the Incident Command Post (MO232). Such alarms provide personnel notification to take cover and are audible throughout WESF.
- Manually actuated evacuate alarms are located in the Operations Base (225-B Building) as well as the Incident Command Post (MO232). Such alarms provide personnel notification to evacuate and are audible throughout WESF.

Whenever mixed waste (capsule) handling operations occur at WESF ~~will~~, all personnel involved must have ~~voice~~ immediate access to an emergency communication ~~or equivalent~~device (e.g., a hand-held two-way radio and/or telephone), either directly or through visual (e.g., hand signals) ~~during work assignments to maintain external~~ or voice contact with another employee, capable of directing emergency communications with ~~shift supervisors. Supervision will contact the Hanford Facility emergency telephone number (911) (373-0911 for cellular telephones) if assistance is needed.~~another employee (WAC 173-303-340(2)(a)).

~~The onsite internal communication systems provide immediate emergency instruction to personnel. The onsite internal communication system includes telephones, various alarms systems, private automatic exchange (PAX) communication system, and two-way radios.~~

~~F.1.3~~*F2.1.1.2 External Communications*

~~WESF is equipped with devices for summoning emergency assistance from the Hanford Fire Department and/or emergency response teams as necessary. External communication is made via fire alarms, a telephone communication system, or two-way radios (hand-held and vehicle-mounted radios) as described in Permit Attachment 4, *Hanford Emergency Management Plan* (DOE/RL-94-02). A telephone communication system and two-way radios can be used to access a supervisor, who contacts the Hanford~~

~~Site emergency network if assistance is needed. Refer to Addendum J, Section J.4.3, for communication equipment requirements.~~

As required by WAC 173-303-340(1)(b), the communications equipment described in Section F2.1.1 must have the capability for contacting the Hanford Patrol Operations Center and Hanford Fire Department to request the assistance of local emergency response organizations.

When activated, the fire detection system and manual fire alarm pull boxes will automatically transmit a fire alarm signal to the 200 Area central fire station.

In the instance that just one employee is at WESF during operations, the individual must have immediate access to a hand-held two-way radio capable of summoning external emergency assistance (WAC 173-303-340(2)(b)).

The Hanford Patrol Operations Center Point of Contact can be contacted for 24-hour emergency communications and for information relays by landline telephone or two-way radio.

State and local response organizations are contacted through the Hanford Patrol Operations Center by dialing emergency number 911 from site telephones, or 509-373-0911 from cellular phones; or for non-emergencies, by dialing the main contact number for the Hanford Patrol Operations Center at 509-373-3800. Onsite responders are notified and/or dispatched through the Hanford Patrol Operations Center.

~~F.1.4~~F2.1.2 Emergency Equipment

~~Emergency~~Portable fire extinguishers and fire control equipment ~~will be~~are available for use ~~at~~throughout WESF ~~as required by WAC 173-303-340(~~(WAC 173-303-340(1~~). A~~)(c)). For a list of emergency equipment ~~is included in~~ , refer to WESF Addendum J, "Contingency Plan." WESF operations personnel are trained in the use of such emergency equipment. For details on personnel emergency training requirements, refer to WESF Addendum G, "Personnel Training."

F2.1.2.1 Fire Detection Systems

Two kinds of fire detectors are used either alone or in combination in the 225-B Building: ionization type elements responsive to products of combustion, and fixed temperature, rate compensated elements. Electrical signals from the fire detectors are transmitted to a central fire alarm panel located in the main entrance corridor. The central panel will initiate an audible alarm system throughout the buildings. The alarm system can also be activated by flow alarm switches installed in the sprinkler system piping. The fire alarm signals are transmitted to the 200 Area central fire station. The fire detection and alarm system is capable of electronically monitoring its own operation and providing trouble signals for loss of electrical power, open circuits, or other problems that could affect the operation of the system. The system provides battery power for approximately 60 hours of operation upon loss of electrical power.

F2.1.2.2 Fire Suppression Systems

The 225-B Building support area, heating, ventilation, and air conditioning room, operating gallery, service gallery, manipulator repair shop, hot and cold manipulator shops, truckport, and Aqueous Makeup Unit area are protected with a wet pipe automatic sprinkler system that alarms when activated through the fire alarm panel to the Hanford Fire Department. Portable fire extinguishers are located throughout the building as well.

F2.1.2.3 Hot Cell Fire Protection Systems

Hot Cell G is equipped with a manually activated water spray fire protection system that can be actuated from the operating gallery. Raw water supplies the fixed and manipulator directed spray nozzles within

the hot cell. Hot Cell G also contains a heat detection system that alarms when activated within the building as well as through the fire alarm panel notifying the Hanford Fire Department.

F.1.5F2.1.3 Water for Fire Control

The pool cell area does not use water for fire control. The hot cell area currently has a manually activated fire suppression system. Incidental combustibles within WESF are administratively controlled to minimize fire hazards in these areas of the facility.

The raw water system provides water at adequate volume and pressure to supply WESF fire needs (WAC 173-303-340(1)(d)). In the event of loss of raw water pressure to WESF, a diesel driven backup pump can be used to supply raw water to WESF from the deep well supply. An underground fire water line supplies water to the local fire hydrant.

F.2F3 Preventive Procedures, Structures, and Equipment

The following sections describe preventive procedures, structures, and equipment.

F.2.1F3.1 Unloading Operations and Aisle Spacing Requirements

All of the waste in storage at WESF originated atcurrently stores 1,936 double-walled capsules containing cesium chloride and strontium fluoride salts. WESF. WESF will does not produce products, have any production processes, nor receive mixed waste from another onsite and/or offsite facility; therefore, no unloading operations inspections are required. Any additional waste accepted intonot applicable.

Furthermore, the capsules are stored underwater in a designated pool cell storage rack location. A capsule(s) may be transferred to Hot Cell G for temporary storage as deemed necessary. Aisle spacing requirements in WAC 173-303-630(5)(c), "Use and Management of Containers," are not applicable to WESF storage operations (see WESF will require a modification of this Addendum andC for further details on WESF storage operations). However, the Permit.mixed waste capsules are stored in a manner that allows for unobstructed movement of personnel and emergency equipment to any area of the operating facility in the event of an emergency, therefore meeting the intent of WAC 173-303-340(3).

F.2.2 Runoff

F3.2 BecausePrevention of Run-On, Run-Off, and Contamination to Water Supplies

Since the mixed waste capsules are stored underwater in pool cells within the 225B225-B Building and pool level iscell water levels are controlled as described in WESF Addendum C in this permit, run-on is not considered a relevant factor in evaluating the protectiveness of waste storage activities at WESF. However, normal building design and construction practices at WESF do address precipitation control. The WESF roof, walls, and foundation prevent precipitation run-on from entering the pool cell and hot cell areas; therefore, no precipitation can contact the waste. -Because no precipitation can enter the building to contact the waste, no run-off is expectedcan occur.

F.2.3 Water Supplies

Pool cell levels will be monitored. Deionized water will be supplied to the pool cell area for filling the pool cells as required. The pool cell area has a sanitary water supply and the hot cell area has deionized water and raw water for fire suppression. The rest of WESF has water supplied for the support areas within the 225B Building.

F.2.4F3.3 Equipment and Power Failure

LossA temporary loss of electrical power does not constitute an emergency, and would not result in a release of mixed waste. -The Bonneville Power Administration grid is the primary power source which supplies WESF. Upon loss of power, the WESF standby electrical system diesel driven generator will start, supplying power to the facility until normal power is restored.

WESF will not be occupied during power outages except for personnel providing a response action. Rechargeable battery powered lighting units will provide emergency illumination. -Emergency communication equipment will be available to summon emergency assistance in the event of a power-loss.

F.2.5F3.4 Personal Protection Equipment

WESF Addendum J does not require any personal protection equipment for management of the capsules. Hearing protection is provided to personnel entering the pool cell area.

F.3F4 Prevention of Reaction of Ignitable, Reactive, and Incompatible Waste

WESF does not and will not store ignitable waste, reactive waste, or waste found incompatible with the mixed waste-capsules.

DRAFT

~~This page intentionally left blank.~~

F5 Arrangements with Local Authorities

Written emergency assistance agreements exist with local authorities that include arrangements to familiarize and furnish local hospitals, police departments, fire departments, and city and county emergency response teams with Hanford Facility information (WAC 173-303-340(4)(a) through (c)). The response agreements designate primary emergency authority (WAC 173-303-340(4)(d)). If state or local authorities decline to enter into a response agreement or familiarization arrangement with the Hanford Facility, the Permittees will record the refusal in the WESF portion of the Hanford Facility Operating Record as required by WA7890008967, *Hanford Facility Resource Conservation and Recovery Act Permit,* Condition II.I.1.g (WAC 173-303-340(5)).

DRAFT

Addendum G

Personnel Training

This page intentionally left blank.

Contents

G1 **Personnel Training** G-1

Table

G-1. WESF Training Matrix ..... G-2~~3~~

This page intentionally left blank.

G1 Personnel Training

This addendum describes the personnel training requirements for the Waste Encapsulation and Storage Facility (WESF) Operating Unit Group.

The Permittees will ensure that personnel training meets the requirements of WAC 173-303-330, "Dangerous Waste Regulations," "Personnel Training." Specific requirements for the "Hanford Facility Personnel Training ~~program~~Program" are described in WA7890008967, *Hanford Facility Resource Conservation and Recovery Act Permit* (hereinafter referred to as the Hanford Facility RCRA Permit), Attachment 5.-

The Permittees will comply with the training matrix ~~below~~in Table G-1, which provides training requirements for ~~Waste Encapsulation and Storage Facility~~ personnel~~.~~ that perform waste management duties at WESF. Refer to the ~~Waste Encapsulation and Storage Facility~~WESF Dangerous Waste Training Plan (DWTP) for a complete description of personnel training requirements. -As required by Hanford Facility RCRA Permit Condition II.I.~~2.,~~1 (WAC 173-303-380, "Facility Recordkeeping"), which satisfies the training records requirements set forth in WAC 173-303-330(3), a copy of the WESF DWTP will be placed in the Hanford Facility Operating Record~~,~~ (WESF ~~file,~~portion) and will be updated by the ~~Permittee~~Permittees as unit-specific conditions change.-

Training received by facility personnel will be commensurate with the duties they ~~perform~~ perform. Individuals are not required to receive training for work duties they do not perform. Continuing training is administered annually, or at 2 year or 3 year retraining frequencies. A course is administered annually if it is administered not less than 30 days after the retraining date set for that course.

~~Waste Encapsulation and Storage Facility Training Matrix~~

	~~Training Category[1]~~				
~~Permit Attachment 5, Training Category~~	~~General Hanford Facility Training~~	~~Contingency Plan Training~~	~~Emergency Coordinator Training~~	~~Operations training~~	
~~WESF DWTP Implementing Plan~~	~~Orientation Program~~	~~Emergency Response (contingency plan)~~	~~Emergency Coordinator Training~~	~~General Waste Management~~	~~Miscellaneous Storage Unit Management~~
~~Job title/position~~					
~~Nuclear Chemical Operator~~	~~X~~	~~X~~			~~X~~
~~Shift Operations Manager (SOM)~~	~~X~~	~~X~~	~~X~~		
~~Environmental Compliance Officer~~	~~X~~			~~X~~	

~~1 Refer to the Dangerous Waste Training Plan (DWTP) prepared for the Waste Encapsulation and Storage Facility for a complete description.~~

Table G-1. WESF Training Matrix

Training Category Course Description[a]	Frequency of Training	Training Type[b]	Job Title/Position									
			Non-WESF Personnel or Visitor	SOM	SOE	SPOC	Waste Service Provider[c]	Maintenance Craft	RCT	NCO	ECO	BED
General Training	Annual	GHFT, CPT	X	X	X	X	X	X	X	X	X	X
Container Management	Annual	GHFT, OT		X			X	X	X	X		
Building Emergency	Annual	ECT										X
ECO Training	Initial	OT									X	
Inspections	Every 2 years	OT								X		
Facility Health and Safety	Annual	GHFT, CPT	X[d]	X	X	X[d]	X	X	X	X	X	X
Waste Designation	Annual	OT					X					
Waste Services	Initial	OT					X					
Waste Shipper	Every 3 years	OT					X					
Waste Management	Initial	GHFT		X				X	X			
SOM	Every 2 years	OT		X								
SOE	Every 2 years	OT			X							

a. See WESF Dangerous Waste Training Plan for a complete description of coursework in each training category.
b. Training types identified in this table (e.g., General Hanford Facility Training and Operations Training) are further discussed in WA7890008967, *Hanford Facility Resource Conservation and Recovery Act Permit* (Attachment 5).
c. Waste service providers include TSDRs, verifiers, shippers, and WMRs. Different waste service providers are only required to take the necessary courses specific to their waste management duties.
d. This training is required only if workers are unescorted in the facility. Personnel that do not have this training will be escorted.

Table G-1. WESF Training Matrix

Training Category Course Description[a]	Frequency of Training	Training Type[b]	Job Title/Position									
			Non-WESF Personnel or Visitor	SOM	SOE	SPOC	Waste Service Provider[c]	Maintenance Craft	RCT	NCO	ECO	BED

BED = Building Emergency Director
CPT = Contingency Plan Training
ECO = Environmental Compliance Officer
ECT = Emergency Coordinator Training
GHFT = General Hanford Facility Training
NCO = Nuclear Chemical Operator
OT = Operations Training
RCT = Radiological Control Technician
SOE = Stationary Operating Engineer
SOM = Shift Operations Manager
SPOC = Single Point of Contact
TSDR = Treatment, Storage, and Disposal Unit Acceptance Representative
WESF = Waste Encapsulation and Storage Facility
WMR = Waste Management Representative

This page intentionally left blank.

DRAFT

Addendum I

Inspection ~~plan~~Plan

DRAFT

DRAFT

This page intentionally left blank.

DRAFT

1

DRAFT

~~ADDENDUM I~~

~~INSPECTION PLAN~~

Contents

I1 Inspection Plan I-1
I1.1 General Inspection Requirements I-1
I1.1.1 Inspection Requirements and Types of Potential Problems I-2
I1.1.2 Frequency of Inspections I-3
I1.1.3 Inspection Log I-4
I1.1.4 Schedule for Remedial Action for Problems Revealed During Inspections I-4

Table

Table I-1. WESF Inspection Schedule I-2

DRAFT

This page intentionally left blank. ~~I.....INSPECTION REQUIREMENTS.....I.1~~

~~I.1 Inspection Plan.....I.1~~

~~I.1.1 General Inspection Requirements.....I.1~~

~~I.1.2 Schedule for Remedial Action for Problems Revealed.....I.1~~

~~I.1.3 Specific Process or Waste Type Inspection Requirements.....I.1~~

DRAFT

~~I INSPECTION plan~~

~~The mixed waste is in solid form and placed in stainless steel capsules.~~

DRAFT

~~I.1~~I1 Inspection Plan

This ~~section~~addendum describes the method(s) and schedule for inspections ~~at~~of the Waste Encapsulation and Storage Facility (WESF~~). These~~) Operating Unit Group waste storage areas and, furthermore, complies with the requirements set forth in WAC 173-303-320, "Dangerous Waste Regulations," "General Inspection."

WESF is located in the northwestern portion of the 200 East Area of the Hanford Facility, with the main 225-B Building adjoining B Plant on the west end. The 225-B Building houses the WESF dangerous waste management units (DWMUs), two of which are operating: Hot Cell G and Pool Cells.

WESF operations provide for continued safe storage and maintenance of the 1,936 capsules containing cesium and strontium mixed waste. The double-encapsulated cesium and strontium salts are stored underwater in various pool cells located in the western portion of the 225-B Building. WESF storage operations are designed to protect human health and the environment from the encapsulated mixed waste.

For further details on WESF DWMUs and storage operations, refer to WESF Addendum C, "Process Information."

Routine inspections ~~will help ensure~~are conducted at WESF to detect signs of equipment deterioration and prevent malfunctions that ~~situations do not exist that might~~would cause ~~or lead to the~~a release of mixed waste to the environment or ~~that might~~ pose a threat to human health~~ and environment. Deficiencies~~. Abnormal conditions and/or deficiencies identified by inspections ~~must~~will be corrected on a schedule that prevents hazards to personnel, the public, and the environment in accordance with the requirements of WAC 173-303-320(3).

Please note, the terms "mixed waste" and/or "waste", when seen in this document, refer to dangerous waste or hazardous waste, as applicable.

~~I.1.1~~I1.1 General Inspection Requirements

The content and frequency of inspections are described in this ~~section. The schedule and inspection records are kept in the inspection logbooks and retained by WESF operations personnel. Inspection records will be retained in accordance with Permit Conditions II.I, and II.X.~~

~~The inspection checklists will consist of a listing of items to be assessed during each inspection. A 'yes/no' response will be made for each listed item. Any deficiencies identified and recorded during the inspection will be reported to WESF management. WESF management will review and determine corrective actions to be taken.~~

~~*I.1.1.1 Types of Potential Problems*~~

~~Types of problems looked for during an inspection are provided in~~subsection as well as Table I~~.~~-1. ~~All~~A copy of the ~~waste in storage~~WESF inspection schedule will be maintained at ~~WESF originated at WESF. WESF does not receive mixed waste from an onsite and/or offsite~~ the facility~~. Because the mixed waste is in a solid form within a stainless steel capsule, spills are not probable. Therefore, spills are not considered among the types of problems that should be addressed, through~~ as required by WAC 173-303-320(2)(a). WESF inspections~~.~~

~~*I.1.1.2 Inspection Schedule*~~

~~The mixed waste capsules are sealed. Frequent inspection of individual mixed waste capsules that require removal of capsules from storage racks is not feasible because of ALARA concerns and the storage~~

~~configuration as described in~~ will be conducted by qualified individuals trained in accordance with WESF Addendum ~~C~~G, "Personnel Training," to inspect WESF waste storage areas.

I1.1.1 ~~The solid form~~Inspection Requirements and Types of ~~mixed waste is sealed in~~ Potential Problems

Inspections are conducted to detect any signs of malfunction, deterioration, discharges, or other anomalies. Refer to Table I-1 for the ~~stainless steel capsules; this makes a leak unlikely. Therefore, frequent~~types of problems looked for during an inspection. WESF inspections include, but are not limited to, the following key components:

- Pool cell beta monitoring system
- Security devices
- Safety and emergency equipment
- 225-B Building

Table I-1. WESF Inspection Schedule

Requirement Description	Inspection Frequency[a]	Types of Potential Problems
Pool Cell Beta Monitoring System: Data from Leak Detection Equipment Monitors (i.e., leakage of the capsules, ***NOT*** pool cell water)	Daily[b]	Verify that beta monitors and associated alarms are functional.
Security Devices: Posted Danger Signs	Annually	Verify that signs are posted and legible.
Safety and Emergency Equipment: 225-B Automatic Sprinkler System – *Valves and Riser Pressure Gauges*	Monthly	Equipment is in good condition, valve seals are intact, and water pressure is available.
225-B Automatic Sprinkler System – *Valve Functional Test*	Annual	Verify that valves and associated alarms are functional.
Fire Extinguishers	Monthly	Equipment is present and in good physical condition, and seal is intact.
Emergency Lighting	Monthly	Verify that equipment is present and functional.
Communications Equipment [c]	Annually	Equipment is present and operating.
Safety Shower	Monthly	Equipment is present and functional.
Eyewash Stations (portable)	Semi Annually	Equipment is present and functional.
225-B Building: Exterior Surfaces and Surrounding Area	Annually	Check for structural damage to the building. Check outside the building for liquid accumulation or signs of hazardous waste releases.

Reference: WAC 173-303-320, "Dangerous Waste Regulations," "General Inspection."

DRAFT

a. Inspections will be performed on working days (not including holidays, weekends, or back shifts). Inspection frequencies include daily – once per calendar day, monthly – once per calendar month, semi annually – once per every six calendar months, and annually – once per calendar year.

b. To implement WAC 173-303-320(2)(c), the inspection requirement for the pool cell beta monitoring system is "daily when in use" and, therefore, is only required for pool cells actively storing mixed waste capsules.

c. Communications equipment includes two-way radios, public address system, and evacuation and take cover alarms.

I1.1.1.1 Pool Cell Beta Monitoring System

The deionized water in the pool cells actively storing mixed waste capsules is continuously monitored for the presence of cesium and/or strontium. The pool cell beta monitors and associated alarms will be monitored daily to ensure that a capsule ~~inspection is not necessary and removal of the capsules only introduces additional~~has not malfunctioned (leaked). Pool cell beta monitors can be used for capsule leak detection since the dangerous and radioactive components of mixed waste are inseparable; therefore, a release of dangerous waste or dangerous waste constituents that does not exhibit radioactivity is not possible.

The beta monitoring system is periodically inspected to verify that the system and associated alarms are functional, and instrumentation readings are within the proper limits.

I1.1.1.2 Security Devices

Posted danger signs are inspected to verify that the signs are posted and legible. Posted signage is consistent with the requirements outlined in WESF Addendum E, "Security."

I1.1.1.3 Safety and Emergency Equipment

Safety and emergency equipment is inspected to verify that the equipment is present, in good condition, and functional. The WESF inspection schedule includes pertinent safety and emergency equipment identified in WESF Addendum J, "Contingency Plan," and Addendum F, "Preparedness and Prevention."

I1.1.1.4 225-B Building

The 225-B Building, which houses the WESF DWMUs, will be inspected on an annual basis. This inspection will include a walkdown of the outside of the 225-B Building, with emphasis on the pool cell portion of the facility. The inspector will check for signs of structural damage or deterioration (i.e., subsidence around the foundation, unusual settling, or major cracks in the structure) of the building that may cause, or could potentially lead to, the release of mixed waste to the environment or threat to human health. The surrounding area will also be inspected to check for liquid accumulation or signs of release of hazardous waste.

I1.1.2 Frequency of Inspections

The frequency of WESF inspections is based on the rate of possible deterioration of equipment, and probability of an environmental or human health incident (WAC 173-303-320(2)(c)) and is, furthermore, identified in Table I-1.

Due to the highly radioactive nature of the mixed waste capsules, weekly inspection of the capsules (in accordance with WAC 173-303-630(6), "Use and Management of Containers") is not feasible to keep radiation exposures as low as reasonably possible and would increase the risk for potential capsule damage~~. Refer to Table I.1 for proposed inspection frequencies.~~/failure. The cesium and strontium salts are contained in double-walled capsules that have been designed, welded, undergone various performance tests, and stored in a manner to ensure that capsule integrity is maintained (see WESF Addendum C for further information on WESF capsule properties and storage operations).

Even though a capsule leak is highly unlikely, the pool cell beta monitors for pool cells actively storing mixed waste capsules are inspected daily. The pool cell beta monitoring system inspection frequency satisfies the WAC 173-303-630(6) requirement to inspect areas where containers are stored at least weekly since any detection of beta radiation would indicate that a container is leaking or deteriorating.

I1.1.3 Inspection Log

Inspections, implemented through operating requirements, will be documented on inspection checklists and/or log sheets in accordance with WAC 173-303-320(2)(d). Inspection checklists and/or log sheets will note the date and time of which the inspection began, and the items that will be assessed during each inspection. Any problems or discrepancies identified during the inspection are recorded on the inspection checklist and/or log sheet, reported to the operating organizations, and prioritized and addressed in a timely fashion as described in Section I1.1.4.

When the inspection is completed, the inspector prints their name and signs the inspection checklist and/or log sheet. The schedule and inspection records will be maintained, retained, and stored in the Hanford Facility Operating Record (WESF portion) in accordance with WA7890008967, *Hanford Facility Resource Conservation and Recovery Act Permit* (hereinafter referred to as Hanford Facility RCRA Permit), Condition II.I, which complies with the record retention requirements set forth in WAC 173-303-320(2)(d) and WAC 173-303-380(1)(e), "Facility Recordkeeping."

I.1.2I1.1.4 Schedule for Remedial Action for Problems Revealed During Inspections

In accordance with Hanford Facility RCRA Permit Condition II.X.4.O.2 (WAC 173-303-320(3)), the WESF operating organization will remedy any problems or discrepancies revealed by the inspection on a schedule that prevents hazards to human health and the environment. Immediate actions will be implemented based on the contingency plan (Addendum J).

I.1.3 Specific Process or Waste Type Inspection Requirements

Due to the design of the capsules and storage restrictions, the capsules cannot be routinely inspected by direct visual means. Inspections of other types of equipment that provide confidence to detect leakage of the capsules are provided in Table I.1.

Table I.1 WAC 173-303-320(2) Inspection Schedule

Requirement description	Inspection frequency	Types of potential problems
Data from leak detection equipment monitors leakage of the capsules (not pool cell water)	Monthly	Observe annunciator panel in WESF operation gallery to determine if lights are operating.
Security devices: "Danger Waste storage—major chemical risk: toxic" signs	Weekly	Signs are posted and legible.
Safety and emergency equipment: emergency lighting	Monthly	Equipment is present and functional.
Annual inspection of 225B Building	Annually	Walk around outside of building and identify any structural damage.

DRAFT

Where a hazard is imminent or has already occurred, immediate action will be taken, including activation of WESF Addendum J when required, as defined in Hanford Facility RCRA Permit Condition II.A.

~~This page intentionally left blank.~~

DRAFT

Addendum J

Contingency Plan

DRAFT

DRAFT

This page intentionally left blank.

DRAFT

DRAFT

ADDENDUM J

CONTINGENCY PLAN

Contents

J CONTINGENCY PLAN J.1
J.1 Building Evacuation Routing (Building Layout) J.3
J.2 Building Emergency Director J.3
J.3 Implementation of the Contingency Plan J.4
J.3.1 Protective Action Responses J.4
J.3.2 Response to Facility Operations Emergencies J.6
J.3.3 Prevention of Recurrence or Spread of Fires, Explosions, or Releases J.7
J.3.4 Incident Recovery and Restart of Operations J.7
J.3.5 Incompatible Waste J.8
J.3.6 Post Emergency Equipment Maintenance and Decontamination J.8
J.4 Emergency Equipment J.8
J.4.1 Fixed Emergency Equipment J.8
J.4.2 Portable Emergency Equipment J.8
J.4.3 Communications Equipment/Warning Systems J.9
J.4.4 Personal Protective Equipment J.9
J.4.5 Spill Control and Containment Supplies J.9
J.4.6 Incident Command Post J.9
J.5 Required Reports J.9
J.6 Plan Location and Amendments J.9
J.7 Facility/Building Emergency Response Organization J.10

DRAFT

J1 Contingency Plan J-1

Appendix

J-A Building Emergency Plan for WESF ..... J-A-i

DRAFT

This page intentionally left blank.

DRAFT

J CONTINGENCY PLAN

J1 The requirements in this Contingency Plan are applicable to waste that is regulated by WAC 173-303 (e.g. dangerous

WAC 173-303, "Dangerous Waste Regulations," requirements for a contingency plan at the Waste Encapsulation and mixed waste). Pursuant to WAC 173-303-350(2),Storage Facility (WESF) Operating Unit Group (OUG) are satisfied in portions of WA7890008967, *Hanford Facility Resource Conservation and* according to the provisions of this Addendum J, *Recovery Act Permit* (hereinafter referred to as the Hanford Facility Permit WA7890008967 (RCRA Permit) -Attachment 4 (DOE/RL-94-02, *Hanford Emergency Management Plan* (DOE/RL-94-02), and the Building Emergency Plan) and this addendum.

The Hanford Facility emergency management program is based on a graded approach for responses to emergency events using OUG-specific to WESF will be amended to incorporate requirements and/or Hanford Facility level emergency procedures. This addendum contains the building emergency plan (BEP) for WESF in Appendix J-A. The WESF BEP contains a description of WAC 173-303-350 and WAC 173-303-360 within 30 days of the effective date of the permit. WESF OUG-specific planning and response, which is used in conjunction with the Hanford Facility RCRA Permit Attachment 4 to meet the requirements for a contingency plan.

DRAFT

Table J.1 identifies the sections of the unit-specific building emergency plan written to meet WAC 173-303-350(3) contingency plan requirements identified in this addendum. In addition, Section 12.0 of the unit-specific WESF building emergency plan is written to meet WAC 173-303-350 and WAC 173-303-360 requirements. Copies of Permit Attachment 4, *Hanford Emergency Management Plan* (DOE/RL-94-02) and the building emergency plan are located and maintained on the Hanford Facility and available as identified in Section J.6. Revisions to Addendum J require a Permit modification subject to WAC 173-303-830 and Permit Condition I.C.3.

The unit specific building emergency plan also serves to satisfy a broad range of other requirements [e.g., Occupational Safety and Health Administration standards (29 CFR 1910), *Toxic Substance Control Act of 1976* (40 CFR 761) and U.S. Department of Energy Orders]. Therefore, revisions made to portions of this unit specific building emergency plan that are not governed by the requirements of WAC 173-303-350 and -360 will not be considered as a modification subject to WAC 173-303-830 or Permit Condition I.C.3.

Any changes to sections of Attachment 4 or the BEP that are governed by the requirements of WAC 173-303-350 and -360 (identified in Table J.1) will be provided to Ecology for review to ensure compliance with the requirements of Addendum J and to determine if a permit modification request is required.

Table J.1. Hanford Facility Documents Containing Contingency Plan Requirements of WAC 173-303-350(3)

Requirement	Permit Attachment 4 *Hanford Emergency Management Plan* (DOE/RL-94-02)	Building Emergency Plan[1] (HNF-IP-0263-WESF)	Addendum J
-350(3)(a) - A description of the actions, which facility personnel must take to comply with this section and WAC 173-303-360	X[2] Section 1.3.4	X[2] Sections 7.1, 7.2 through 7.2.5, and 7.3 Sections 4.0, 8.2, 8.3, 8.4, and 11.0	X[2] Sections J.3.1, J.3.2 through J.3.2.5, and J.3.3 Sections J.3, J.3.4, J.3.5, J.3.6, and J.5
-350(3)(b) - A description of the actions which shall be taken in the event that a dangerous waste shipment, which is damaged or otherwise presents a hazard to the public health and the environment, arrives at the facility, and is not acceptable to the owner or operator, but cannot be transported pursuant to the requirements of WAC 173-303-370(5), Manifest system, reasons for not accepting dangerous waste shipments.	X[2] Section 1.3.4	X[2], Section 7.2.5.1	X[2], SectionJ.3.2.5.1
-350(3)(c) - A description of the arrangements agreed to by local police departments, fire departments,	X Sections 3.2.3, 3.3.1, 3.3.2, 3.4,		

Requirement	Permit Attachment 4 *Hanford Emergency Management Plan* (DOE/RL-94-02)	Building Emergency Plan[1] (HNF-IP-0263-WESF)	Addendum J
hospitals, contractors, and state and local emergency response teams to coordinate emergency services as required in WAC 173-303-340(4).	3.4.1.1, 3.4.1.2, 3.4.1.3, 3.7, and Table 3-1		
-350(3)(d) - A current list of names, addresses, and phone numbers (office and home) of all persons qualified to act as the emergency coordinator required under WAC 173-303-360(1). Where more than one person is listed, one must be named as primary emergency coordinator, and others must be listed in the order in which they will assume responsibility as alternates		X[5] Sections 3.1and 13.0	X[5] Sections J.2 and J.7
-350(3)(e) - A list of all emergency equipment at the facility (such as fire extinguishing systems, spill control equipment, communications and alarm systems, and decontamination equipment), where this equipment is required. This list must be kept up to date. In addition, the plan must include the location and a physical description of each item on the list, and a brief outline of its capabilities.		X Section 9.0	X Section J.4
-350(3)(f) - An evacuation plan for facility personnel where there is a possibility that evacuation could be necessary. This plan must describe the signal(s) to be used to begin evacuation, evacuation routes, and alternate evacuation routes.	X[6] Figure 7-3 and Table 5-1	X[7] Section 1.5	X[7] Section J.1 and facility operating record

An 'X' indicates requirement applies.

[1] Portions of Permit Attachment 4, *Hanford Emergency Management Plan* (DOE/RL-94-02) not enforceable through Appendix A of that document are not made enforceable by reference in the building emergency plan.

[2] Permit Attachment 4, *Hanford Emergency Management Plan* (DOE/RL-94-02) contains descriptions of actions relating to the Hanford Site Emergency Preparedness System. Other credible scenarios that exist at WESF and all emergency procedures at WESF that are different from those in Attachment 4, must be identified in the WESF BEP. The description of actions contained in the building emergency plan will be used during an event by a building emergency director.

[3] This footnote is intended to be blank.

[4] This footnote is intended to be blank.

[5] Emergency Coordinator names and home telephone numbers are maintained with the Patrol Operations Center (telephone number 373-0911) in accordance with Permit Condition II.A.3 and will be updated, at a minimum, monthly.

[6] The Hanford Facility (site wide) signals are provided in Attachment 4, table 5.1. WESF specific communication equipment and warning systems are provided in section J.4.3.

[7] Evacuation routes for occupied buildings surrounding the DWMU are posted on information boards within the buildings.

J.1 Building Evacuation Routing (Building Layout)

Evacuation routing maps will be maintained in the facility operating record and provide identification of the primary and secondary staging areas and a general layout of the WESF. Alternate evacuation routes will be used on a case-by-case basis based on meteorological conditions at the time of the event.

J.2 Building Emergency Director

The Incident Command System (ICS) and staff, with supporting on-call personnel, will meet the requirements of the Emergency Coordinator as identified in WAC 173-303-360(1). The Building Emergency Director (BED) will direct emergency response until the Incident Commander (IC) arrives. The BED becomes a member of the ICP and functions under the direction of the IC. In this role, the BED will continue to manage and direct WESF operations. During events, WESF personnel will perform response duties under the direction of the BED. The senior Hanford Fire Department official will manage the Incident Command Post (ICP), unless the event is determined to be primarily a security event, in which case the Hanford Fire Department and Hanford Patrol will operate under a unified command system with Hanford Patrol making all the decisions pertaining to security. These individuals will be designated as the IC and as such, have the authority to request and obtain any resources necessary for protecting people and the environment.

A listing of the BEDs by title, work location, and work telephone number is contained in Section J.7 of this plan. The BED will be on the premises or will be available through an "on-call" list 24-hours-a-day. Names and home telephone numbers of the BEDs are available from the Patrol Operations Center in accordance with Permit Condition II.A.3.

J.3 Implementation of the Contingency Plan

In accordance with WAC 173-303-360(2)(b), whenever there is a release, fire, or explosion, the BED will ensure that trained personnel identify the character, exact source, amount, and areal extent of any released materials. Identification of waste can be made by activities that can include, but are not limited to, visual inspection of mixed waste capsules, sampling activities in the field, reference to inventory records, or by consulting with facility personnel. During the emergency, if samples of materials are required, sampling will be performed by qualified personnel and the samples will be analyzed as appropriate. These activities must be performed with a sense of immediacy and will include available information.

The BED will use the following procedures of WAC 173-303-360(2)(d) to implement an emergency event:

"If the emergency coordinator determines that the facility has had a release, fire, or explosion which could threaten human health or the environment, he must report his findings as follows:

(i) If his assessment indicates that evacuation of local areas may be advisable, he must immediately notify appropriate local authorities. He must be available to help appropriate officials decide whether local areas should be evacuated; and

~~(ii) He must immediately notify the department and either the government official designated as the on-scene coordinator, or the National Response Center (using their 24-hour toll free number (800) 424-8802)."~~

~~As soon as possible, after stabilizing event conditions, the BED will determine, in consultation with the site contractor environmental single-point-of-contact, if notification to Ecology is needed to meet WAC 173-303-360(2)(d) reporting requirements. Additional information is found in Permit Attachment 4, *Hanford Emergency Management Plan* (DOE/RL-94-02), Section 4.2.~~

~~If review of all available information does not yield a definitive assessment of the danger posed by the incident, a worst-case condition will be presumed and appropriate protective actions and notifications will be initiated. The BED will be responsible for initiating any protective actions based on their best judgment of the incident.~~

~~The BED will assess each incident to determine the response necessary to protect the personnel, facility, and the environment. If assistance from Hanford Patrol, Hanford Fire Department, or ambulance units is required, the Hanford Emergency Response Number (911 from site office phones/373-0911 from cellular phones) must be used to contact the Patrol Operations Center and request the desired assistance. To request other resources or assistance from outside the WESF, the Patrol Operations Center business number is used (373-3800).~~

~~J.3.1 Protective Action Responses~~

~~Protective action responses are discussed in the following sections. The steps identified in the following description of actions do not have to be performed in sequence because of the unanticipated sequence of incident events.~~

~~*J.3.1.1 Evacuation*~~

~~*J.3.1.1.1 Building/Facility Evacuation*~~

~~If an evacuation is ordered or the evacuation siren sounds in the area of WESF, personnel will proceed to the appropriate staging area (refer to Section J.1).~~

~~The BED or Staging Area Manager will direct the evacuation; however, to ensure that evacuations will be conducted promptly and safely, all personnel will be familiar with the correct evacuation procedure.~~

~~Area evacuations are either rapid or controlled, as pointed out in the following steps. When possible, the following steps must be conducted concurrently.~~

~~Area Evacuation Procedure~~
~~• Halt any operations or work and place the equipment and structures in a safe condition. Use emergency shutdown procedures for rapid evacuation.~~
~~• Use whatever means are available (bullhorns, runners, etc.) to pass the evacuation information to personnel.~~
~~• Evacuate personnel to the staging area; group personnel as follows: potentially contaminated protective clothing, keys immediately available for vehicles those needing rides. Assist personnel that are temporary/permanently disabled.~~
~~• Conduct personnel accountability. If unable to account for personnel, report personnel accountability results to the Hanford Emergency Operations Center (Hanford EOC) at any of the following numbers (373-1786, 373-3876, 376-8612, or 376-4712).~~
~~• Inform IC of any potentially affected personnel (i.e., injured, contaminated, exposed, etc.) once the IC arrives at the ICP.~~

~~Area Evacuation Procedure~~
~~• Relay pertinent evacuation information (routes, destination, etc.) to drivers.~~ ~~• Dispatch vehicles as soon as the vehicles are loaded.~~
~~• Report status to the Hanford EOC, request additional transportation if required, and report if any personnel remain who are performing late shutdown duties.~~

~~J.3.1.2 Take Cover~~

~~The required actions to be accomplished during a take cover at WESF will be set forth in a facility-specific procedure.~~

~~When the Take Cover Alarm (Wavering Siren) is activated, personnel will take cover in the nearest building or trailer. The BED will notify the Patrol Operations Center upon activation of the emergency siren system.~~

~~The following actions will be taken or considered in a Take Cover:~~

- ~~Shut doors and windows and wait for further instructions~~
- ~~Secure ventilation system~~
- ~~Follow normal exit procedures from radiological areas~~
- ~~Lock up classified documents and prepare for a possible evacuation~~
- ~~Report your location to the Personnel Accountability Aid or the BED~~
- ~~Personnel Accountability Aides will provide accountability status to the Staging Area Manager for facility personnel during an event.~~
- ~~Inform IC of any potentially affected personnel (i.e., injured, contaminated, exposed, etc.) once the IC arrives at the ICP.~~

~~J.3.2 Response to Facility Operations Emergencies~~

~~Whenever there is an imminent or actual emergency situation, the BED will review the site-wide and WESF emergency response procedure(s) and, as required, categorize and/or classify the event. If necessary, the BED will initiate area protective actions and Hanford Site Emergency Response Organization activation. The steps identified in the following description of actions do not have to be performed in sequence because of the unanticipated sequence of incident events.~~

~~J.3.2.1 Loss of Utilities~~

~~A case-by-case evaluation is required for each event to determine loss of utility impacts. When a BED determines a loss of utility impact, actions will be taken to ensure dangerous or mixed waste is being properly managed. As necessary, the BED will stop operations and take appropriate actions until the utility is restored.~~

~~J.3.2.2 Major Process Disruption/Loss of Plant Control~~

~~This section is not applicable to WESF because operations at WESF do not include a major process.~~

DRAFT

~~J.3.2.3 Pressure Release~~

~~The most probable pressure-related emergency at WESF would be failure of a utility steam line. In the event of such a failure, the affected line will be isolated and repairs will be made. Additional pressure-related emergencies at WESF could be due to a failure of the air receiver tank, the air dryer or the JCI Boiler (due to close proximity), and gas cylinder bottles.~~

~~J.3.2.4 Fire and/or Explosion~~

~~In the event of a fire, the discoverer will activate a fire alarm (pull box); will call 911 from site office phones/373-0911 from cellular phones or verify that the Hanford Emergency Response Number has been called. Automatic initiation of a fire alarm (through the smoke detectors and sprinkler systems) is also possible.~~

- ~~Unless otherwise instructed, personnel will evacuate the area/building by the nearest safe exit and proceed to the designated staging area for accountability.~~
- ~~On actuation of the fire alarm, ONLY if time permits, personnel will shut down equipment and secure waste. The alarm automatically signals the Hanford Fire Department.~~
- ~~The BED will proceed directly to the ICP, obtain all necessary information pertaining to the incident, and send a representative to meet Hanford Fire Department.~~
- ~~The BED will provide a formal turnover to the IC, when the IC arrives at the ICP.~~
- ~~The BED will inform the Hanford Site Emergency Response Organization as to the extent of the emergency (including estimates of dangerous waste and mixed waste quantities released to the environment).~~
- ~~If operations are stopped in response to the fire, the BED will ensure that systems are monitored for leaks, pressure buildup, gas generation, and ruptures.~~
- ~~Hanford Fire Department firefighters will extinguish the fire as necessary.~~

~~J.3.2.5 Hazardous Material, Dangerous and/or Mixed Waste Spill~~

~~Spills can result from many sources including process leaks, container spills or leaks, damaged packages or shipments, or personnel error. Spills of mixed waste are complicated by the need to deal with the extra hazards posed by the presence of radioactive materials.~~

- ~~The discoverer will notify the BED and will initiate the SWIMS response:~~
  - ~~Stops work~~
  - ~~Warns others in the vicinity~~
  - ~~Isolates the area~~
  - ~~Minimizes exposure to the hazards~~
  - ~~Requests the BED Secure ventilation.~~
- ~~The BED will determine if emergency conditions exist requiring response from the Hanford Fire Department based on classification of the spill and injured personnel, and will evaluate the need to perform additional protective actions.~~
- ~~If the Hanford Fire Department resources are not needed, the spill will be mitigated with resources identified in Section J.4 and proper notifications will be made.~~
- ~~If the Hanford Fire Department resources are needed, the BED will call 911 from site office phones/373-0911 from cellular phones.~~
- ~~The BED will send a representative to meet the Hanford Fire Department.~~
- ~~The BED will provide a formal turnover to the IC when the IC arrives at the ICP.~~

- The BED will inform the Hanford Site Emergency Response Organization as to the extent of the emergency (including estimates of dangerous waste, mixed waste, or radioactive material quantities released to the environment).
- If operations are stopped in response to the spill, the BED will ensure that systems are monitored for leaks, pressure buildup, gas generation, and ruptures.
- Hanford Fire Department will stabilize the spill.

J.3.2.5.1 Damaged or Unacceptable Shipments

This is not applicable because the WESF does not receive onsite transfers or offsite shipments of dangerous and/or mixed waste.

J.3.3 Prevention of Recurrence or Spread of Fires, Explosions, or Releases

The BED, as part of the ICP, will take the steps necessary to ensure that a secondary release, fire, or explosion does not occur. The BED will take measures, where applicable, to stop processes and operations; collect and contain released wastes and remove or isolate containers. The BED will also monitor for leaks, pressure buildups, gas generation, or ruptures in valves, pipes, or other equipment, whenever this is appropriate.

J.3.4 Incident Recovery and Restart of Operations

A written recovery plan is needed following an event when the recovery actions could result in further risk to human health or the environment. This written recovery plan will be developed in accordance with Permit Attachment 4, *Hanford Emergency Management Plan* (DOE/RL-94-02), Section 9.2. Permit Attachment 4, *Hanford Emergency Management Plan* (DOE/RL-94-02), Section 5.1, also discusses different reports to outside agencies.

If the contingency plan was implemented, Ecology will be notified before operations can resume [WAC 173-303-360(2)(j)]. This notification must include the following statements.

No waste that may be incompatible with the released material is treated, stored, or disposed of until cleanup procedures are completed. WAC 173-303-360(2)(i); and

All emergency equipment listed in the contingency plan is cleaned, and fit for its intended use before operations are resumed. WAC 173-303-360(2)(i)(ii).

The notification required by WAC 173-303-360(2)(j) may be made via telephone and documentation of the notification will be included in the WESF operating record. Additional information that Ecology requests will be included in the required 15-day report identified in Section J.5 and required by WAC 173-303-360(2)(k).

For emergencies not involving activation of the Hanford EOC, the BED will ensure that conditions are restored to normal before operations are resumed. If the Hanford Site Emergency Response Organization was activated and the emergency phase is complete, a special recovery organization could be appointed at the discretion of RL to restore conditions to normal. This process is detailed in RL and contractor emergency procedures. The makeup of this organization depends on the extent of the damage and the effects. The appropriate contractor's management will appoint the onsite recovery organization.

J.3.5 Incompatible Waste

After an emergency, the BED or the onsite recovery organization will ensure that no waste that may be incompatible with the released material is treated, stored, or disposed of until cleanup procedures are completed pursuant to WAC 173-303-360(2)(i). Clean up actions

~~will be taken by WESF personnel or other assigned personnel. Permit Attachment 4, *Hanford Emergency Management Plan* (DOE/RL-94-02), Section 9.2.3, describes actions to be taken.~~

~~Waste from cleanup activities will be designated and managed as newly generated waste.~~

~~A field check for compatibility will be performed before storage, as necessary.~~

~~Incompatible wastes will not be placed in the same container and will follow the requirements of WAC 173-303-630(9). Containers of waste will be placed in approved storage areas appropriate for their compatibility class.~~

~~If incompatibility of waste was a factor in the incident, the BED or the onsite recovery organization will ensure that the cause is identified and corrected.~~

~~J.3.6 Post Emergency Equipment Maintenance and Decontamination~~

~~The BED will ensure that all emergency equipment listed in section J.4 is cleaned and fit for its intended use before operations are resumed in accordance with WAC 173-303-360(2)(i)(ii). Depleted stocks of neutralizing and absorbing materials will be replenished; protective clothing will be cleaned or disposed of and restocked, etc.~~

~~All equipment used during an incident will be decontaminated (if practicable) or disposed of as spill debris. Decontaminated equipment will be checked for proper operation before storage for subsequent use. Consumable and disposed materials will be restocked. Fire extinguishers will be replaced.~~

~~J.4 Emergency Equipment~~

~~Emergency resources and equipment for the WESF are presented in this section.~~

~~J.4.1 Fixed Emergency Equipment~~

~~FIXED EMERGENCY EQUIPMENT~~		
~~TYPE~~	~~LOCATION~~	~~CAPABILITY~~
~~225B Wet-Pipe Automatic Sprinkler System~~	~~225B areas, except process cells, canyon, and pool cell~~	~~Detect and Suppress Fire~~
~~Decontamination Rooms~~	~~225B SWP Lobby~~	~~Personnel Decontamination~~
~~Fire Doors~~	~~Throughout 225B~~	~~Fire Containment~~
~~Fire Alarm Pull Boxes~~	~~Throughout WESF~~	~~Notification of Personnel and Fire Department~~

~~J.4.2 Portable Emergency Equipment~~

~~PORTABLE EMERGENCY EQUIPMENT~~		
~~TYPE~~	~~LOCATION~~	~~CAPABILITY~~
~~Fire Extinguishers~~	~~Located throughout WESF~~	~~Fire suppression~~

~~J.4.3 Communications Equipment/Warning Systems~~

~~COMMUNICATIONS EQUIPMENT~~		
~~TYPE~~	~~LOCATION~~	~~CAPABILITY~~
~~Public Address (PA) System~~	~~All telephones~~	~~Internal Communication Dial #, 8, 0, then talk~~
~~Steady Siren~~	~~Located in 225B Room 108 and 2025E control room. Audible throughout WESF~~	~~Emergency Evacuation Notification to Personnel~~
~~Wavering Siren~~	~~Located in 225B Room 108 and 2025E control room. Audible throughout WESF~~	~~Emergency Take Cover Notification to Personnel~~

Two-way radios	Key personnel	Internal Communications
Cellular phones	Operations Manager, OBED, WESF Surveillance Operator	Exterior Communications

Note: Site wide communications and warning systems are identified in Permit Attachment 4, *Hanford Emergency Management Plan* (DOE/RL-94-02), Table 5.1.

J.4.4 Personal Protective Equipment

PERSONAL PROTECTIVE EQUIPMENT		
TYPE	LOCATION	CAPABILITY
None	—	—

J.4.5 Spill Control and Containment Supplies

SPILL KITS AND SPILL CONTROL EQUIPMENT		
TYPE	LOCATION	CAPABILITY
Spill Kit	WESF Heating, Ventilation/ and Air Conditioning (HVAC) Room; Pool Cell	Response to spills of hazardous materials

J.4.6 Incident Command Post

The ICPs will be identified in a fixed location or the IC will determine a location appropriate for the event. Emergency resource materials will be stored at each location. The IC will activate the Hanford Fire Department Mobile Command Unit if necessary.

J.5 Required Reports

Post incident written reports are required for certain incidents on the Hanford Site. The reports are described in Permit Attachment 4, *Hanford Emergency Management Plan* (DOE/RL-94-02), Section 5.1.

Facility management will note in the Hanford Facility Operating Record, WESF File, the time, date, and details of any incident that requires implementation of the contingency plan (refer to Section J.3). Within fifteen (15) days after the incident, a written report must be submitted to Ecology. The report must include the elements specified in WAC 173-303-360(2)(k).

J.6 Plan Location and Amendments

Copies of Attachment 4 [*Hanford Emergency Management Plan* (DOE/RL-94-02)] will be maintained per permit condition I.M.1. Copies of the Building Emergency Plan and WESF Permit Addendum J will be maintained at the following locations:

- MO-232
- 225B, room 108A

These documents will be available in either hard copy or electronic form.

This plan will be reviewed and immediately amended as necessary, in accordance with Permit Attachment 4, *Hanford Emergency Management Plan* (DOE/RL-94-02), Section 14.3.1.1.

J.7 Facility/Building Emergency Response Organization

WESF BEDs		
TITLE	WORK LOCATION	WORK PHONE
Shift Operations Manager	225B Operating Base	372-0054 or 372-0394

~~Names and home telephone numbers of the BEDs are available from the Patrol Operations Center (373-0911) in accordance with Permit Condition II.A.3.~~

DRAFT

This page intentionally left blank.

DRAFT

Appendix J-A

Building Emergency Plan for WESF

DRAFT

This page intentionally left blank.

DRAFT

1

DRAFT