STATE OF WASHINGTON
DEPARTMENT OF ECOLOGY
*3100 Port of Benton Blvd • Richland, WA 99354 • (509) 372-7950*
*711 for Washington Relay Service • Persons with a speech disability can call 877-833-6341*

September 5, 2017 17-NWP-103

Mr. Kevin W. Smith, Manager
Office of River Protection
United States Department of Energy
PO Box 450, MSIN: H6-60
Richland, Washington 99352

Ms. Peggy McCullough, Project Director
Bechtel National, Inc.
2435 Stevens Center Place, MSIN: H4-02
Richland, Washington 99354

Re: Final Class 3 Permit Modification 8C.2017.6F to the *Hanford Facility Resource Conservation and Recovery Act Permit, Dangerous Waste Portion, Revision 8C, for the Treatment, Storage, and Disposal of Dangerous Waste*, Part III, Operating Unit Group 10, Waste Treatment and Immobilization Plant (WTP Permit), Effluent Management Facility (EMF) Secondary Containment, WA7890008967

References: See page 4

Dear Mr. Smith and Ms. McCullough:

This letter issues the Department of Ecology's (Ecology) final permit decision to approve and incorporate the proposed permit modification 8C.2017.1D, from here on known as permit modification 8C.2017.6F. This modification is incorporated into Part III, Unit Group 10, WTP Permit. In accordance with Washington Administrative Code (WAC) 173-303-840(8)(b), this WTP Permit is effective October 5, 2017.

The purpose of this Class 3 permit modification is to update the WTP Permit Chapters and Appendices to support the design and construction of the EMF Secondary Containment. This modification consists of:

- New Interim Compliance Schedule Appendix 1.4 for EMF.
- Revised Part A.
- Revised Permit Conditions.
- Revised Permit Chapters and new Permit Chapters (Chapter 2 and Chapter 4G).
- Revised Appendices and an entirely new Appendix 13.

The Department of Energy – Office of River Protection and Bechtel National, Inc. requested a Temporary Authorization (TA) in accordance with WAC 173-303-830(4)(e), to begin installation of EMF Secondary Containment Systems. Ecology granted the TA for 180 days on February 27, 2017 (Reference 2), to place foundations and stem walls for EMF Buildings 25, 25A, 26, and the stack. Ecology granted a second TA request on June 22, 2017 (Reference 3), to set ring beams and topping slabs for Buildings 25 and 25A during this public comment period.

® 18

 

As required by WAC 173-303-840(3)(d), Ecology held a 45-day public comment period from May 22, 2017 through July 7, 2017 (Reference 4). Ecology received four sets of comments during the public comment period. Ecology reviewed the comments and issued a *Response to Comments* document. The *Response to Comments* document is on the enclosed DVD (Ecology Publication 17-05-006) and is available on the Ecology website at: https://fortress.wa.gov/ecy/publications/SummaryPages/1705006.html.

The permit modification is also on the enclosed DVD. Copies of this DVD are available at the Hanford Public Information Repositories in Richland, Spokane, and Seattle, Washington, as well as Portland, Oregon. A hard copy is available for viewing at:

| | |
|---|---|
| Department of Ecology<br>Nuclear Waste Program<br>3100 Port of Benton Boulevard<br>Richland, Washington 99354 | United States Department of Energy<br>Administrative Record<br>2440 Stevens Center Place<br>Richland, Washington 99354 |

Individuals can request copies of the DVD by contacting Ecology's Resource Center at (509) 372-7950.

In accordance with WAC 173-303-830(4)(f)(ii), Ecology's decision to grant or deny a Class 3 permit modification request under this section may be appealed under the permit appeal procedures of WAC 173-303-845.

**Your Right to Appeal**

You have a right to appeal this permit modification to the Pollution Control Hearings Board (PCHB) within 30 days of the date of receipt of this Permit. The appeal process is governed by Chapter 43.21B of the Revised Code of Washington (RCW) and Chapter 371-08 of the WAC. "Date of receipt" is defined in RCW 43.21B.001(2).

To appeal you must do all of the following within 30 days of the date of receipt of this Permit:

- File your appeal and a copy of this Permit with the PCHB (see addresses below). Filing means actual receipt by the PCHB during regular business hours.
- Serve a copy of your appeal and this Permit on Ecology in paper form – by mail or in person (see addresses below). E-mail is not accepted.

You must also comply with other applicable requirements in Chapter 43.21B of the RCW and Chapter 371-08 of the WAC.

**1. To file your appeal with the Pollution Control Hearings Board:**

| **Mail appeal to:** | **OR** | **Deliver your appeal in person to:** |
|---|---|---|
| The Pollution Control Hearings Board<br>PO Box 40903<br>Olympia, Washington 98504-0903 | | The Pollution Control Hearings Board<br>1111 Israel Road, Southwest, Suite 301<br>Tumwater, Washington 98501 |

**2. To serve your appeal on the Department of Ecology:**

| **Mail appeal to:** | **OR** | **Deliver your appeal in person to:** |
|---|---|---|
| The Department of Ecology<br>Appeals Processor<br>PO Box 47608<br>Olympia, Washington 98504-7608 | | The Department of Ecology<br>Appeals Processor<br>300 Desmond Drive Southeast<br>Lacey, Washington 98503 |

**3. Send a copy of your appeal to:**

Dan McDonald, Tank Waste Treatment Project Manager
Department of Ecology
Nuclear Waste Program
3100 Port of Benton Boulevard
Richland, Washington 99354

If you have any questions regarding this permit modification, please contact John Richardson, Permit Writer, at john.richardson@ecy.wa.gov or (509) 372-7943, or Mandy Jones, Permit Coordinator, at mandy.jones@ecy.wa.gov or (509) 372-7916.

Sincerely,

Suzanne Dahl
Dangerous Waste Permit Manager
Nuclear Waste Program

yl/mrb
Enclosure

References:

1. Letter 16-ECD-0056, dated November 21, 2016, "Submittal of Dangerous Waste Permit Class 3 Modification Notification for the Effluent Management Facility, 24590-BOF-PCN-ENV-15-002"
2. Letter 17-NWP-021, dated February 27, 2017, "Request for Temporary Authorization to Begin Installation of Effluent Management Facility Secondary Containment"
3. Letter 17-NWP-073, dated June 22, 2017, "Request for Temporary Authorization to Begin Installation of Effluent Management Facility Secondary Containment"
4. Letter 17-NWP-056, dated May 17, 2017, "Proposed Class 3 Permit Modification 8C.2017.1D of the *Hanford Facility Resource Conservation and Recovery Act Permit, Dangerous Waste Portion, Revision 8C, for the Treatment Storage, and Disposal of Dangerous Waste* (Site-wide Permit), Part III, Operating Unit Group 10, Waste Treatment and Immobilization Plant (WTP) Effluent Management (EMF) Secondary Containment, WA7890008967"

cc: See page 4

cc electronic w/o enc:

Dave Bartus, EPA
Dennis Faulk, EPA
Mary Beth Burandt, USDOE
Rob Hastings, USDOE
Lori Huffman, USDOE
Christopher Kemp, USDOE
Lori Baker, BNI
Barry Curn, BNI
Alan Dobson, BNI
Jean Dunkirk, BNI
Mark Frei, BN
Lori Fritz, BNI
Kim Irwin, BNI
Roger Landon, BNI
Sandi Murdock, BNI
John Norwood, BNI
Scott Oxenford, BNI
Bruce Schappell, BNI
Edward Sproat, III, BNI
John St. Julian, BNI
Elizabeth Winkelman, BNI
Phil Worley, BNI
Donna Yasek, BNI
Jon Perry, MSA
Rose Ferri, YN
Ken Niles, ODOE
Dan Roberson, AECOM
Deborah Alexander, Ecology
Jennifer Cantu, Ecology
Annette Carlson, Ecology
Tracy Gao, Ecology
Mandy Jones, Ecology
Yoanna Lucatero, Ecology
John Richardson, Ecology
Ron Skinnarland, Ecology
Nancy Ware, Ecology

cc w/enc, DVD:

Tim Hamlin, EPA
Cliff Clark, USDOE
Lori Huffman, USDOE
Christopher Kemp, USDOE
Matt Johnson, CTUIR
Jack Bell, NPT
Alyssa Buck, Wanapum
Rose Longoria, YN
Susan Leckband, HAB
Ken Niles, ODOE
John Fowler, ACHP
Robin Priddy, BCAA
Donald Redman, USACE
Trevor Fox, USFW
Mike Livingston, WDFW
John Martell, WDOH
John Wiesman, WDOH
Sonia Soelter, WSDA
Allyson Brooks, WSDAHP
Cindy Preston, WSDNR
BNI Correspondence Control
Environmental Portal
Gonzaga University Foley Center Library
Hanford Facility Operating Record
MSA Correspondence Control
Portland State University Library, Government Information
University of Washington Suzzallo Library, Government Publications
USDOE-ORP Correspondence Control
USDOE Pubic Reading Room, CIC
USDOE-RL Correspondence Control
USEPA Region 10 Hanford Field Office Correspondence Control

cc w/enc, DVD and hard copy:

NWP Central File
USDOE Administrative Record: Hanford Site-wide Permit

cc w/enc, hard copy:

NWP Library: Hanford Site-wide Permit

Quarter Ending 12/31/2016 24590-BOF-PCN-ENV-15-002

# Hanford Facility RCRA Permit Modification Notification Form
## Part III, Operating Unit 10
## Waste Treatment and Immobilization Plant

Index

Page 2 of 3: Hanford Facility RCRA Permit, Part III, Operating Unit 10, Waste Treatment and Immobilization Plant

Add newly issued permit documents, and update existing permit documents, found in various Appendices of the Waste Treatment and Immobilization Plant (WTP) Dangerous Waste Permit (DWP) and Administrative Record. Update the existing WTP DWP Chapters and Appendices to describe design/process modifications needed to support the new Direct Feed LAW (DFLAW) configuration. Add a new appendix in WTP DWP Chapter 4 to describe the new Effluent Management Facility (EMF) and DFLAW configuration to support the design and construction of the EMF Tanks and Miscellaneous Units Secondary Containment requirements. Add a new appendix to the WTP DWP to include documents associated with EMF/DFLAW configuration.

Submitted by Co-Operator:

Roger J. Landon 11/8/16
Roger J. Landon Date

Reviewed by ORP Program Office:

11/8/16
J. F. Grindstaff Date

Quarter Ending 12/31/2016

24590-BOF-PCN-ENV-15-002

| Hanford Facility RCRA Permit Modification Notification Form | |
|---|---|
| Unit: | Permit Part: |
| **Waste Treatment and Immobilization Plant** | **Part III, Operating Unit 10** |

Quarter Ending 12/31/2016 24590-BOF-PCN-ENV-15-002

Description of Modification:

The purpose of this Class 3 Permit Change Notice (PCN) is to update the Waste Treatment and Immobilization Plant (WTP) Dangerous Waste Permit (DWP) Chapters and Appendices to support the new Direct Feed Low-Activity Waste (DFLAW) configuration, which includes a new facility, the Effluent Management Facility (EMF). In addition, new WTP DWP Chapter 4 Appendix 4G will be added along with WTP DWP Appendix 13.

The EMF will include new DWP Tanks and Miscellaneous Units, including associated ancillary equipment and secondary containment. In addition, the Low-Activity Waste (LAW) Facility, Analytical Laboratory (Lab), and Balance of Facilities (BOF) engineering documents and DWP permit chapters will be updated to accommodate the new configuration.

The PCN will add several new engineering documents, including an Independent, Qualified, Registered Professional Engineer (IQRPE) report, a General Arrangement Plan, several Process Flow Diagrams, several Piping & Instrumentation Diagrams, and several Permit Documents. In addition, the PCN will include revisions to previously issued Permit Documents and an existing Engineering Specification. An Overview of the Effluent Management Facility Process Design (Mass Balance) will be entered into the administrative record. This PCN updates or adds new information in WTP DWP Appendices 7.5, 7.7, 7.9 to reflect current design. In addition, Appendix 13 will be added to the WTP DWP. It will contain documents associated with the EMF and DFLAW configuration. Documents will be added to:

- Appendix 13.1 (Process Flow Diagrams)
- Appendix 13.2 (Piping and Instrumentation Diagrams)
- Appendix 13.4 (General Arrangement Drawing)
- Appendix 13.11 (Independent, Qualified, Registered Professional Engineer Report)
- Appendix 13.13 (Instrument Control Logic and Narrative Description)
- Appendix 13.18 (Operating Documents)

This PCN includes newly issued and revised Chapters and Appendices associated with the WTP DWP.

Revisions will occur to the following DWP Chapters and Appendices:

- Chapter 1- Part A Form
- Chapter 2- Topographic Map
- Chapter 3, Appendix 3A- Waste Analysis Plan
- Chapter 3 Appendix 3B- Quality Assurance Project Plan
- Chapter 4- Process Information
- Chapter 4, Appendix 4A- Figures and Drawings
- Chapter 4, Appendix 4E- Low-Activity Waste (LAW) Vitrification Facility
- Chapter 4, Appendix 4H- Analytical Laboratory (Lab)
- Chapter 4, Appendix 4I- Balance of Facilities
- Chapter 6- Procedures to Prevent Hazards
- Chapter 6, Appendix 6A- Inspection Schedule
- Chapter 7- Contingency Plan
- Chapter 7, Appendix 7A- Emergency Response
- Chapter 8- Personnel Training
- Chapter 11- Closure Plan

In addition, Chapter 4 Appendix 4G will be added to include information on the EMF and DFLAW configuration.

Information on the documents included in this PCN is located in the table below.

| **Appendix 7.5- Civil, Structural, and Architectural Criteria and Typical Design Details** | | | |
|---|---|---|---|
| Replace | 24590-WTP-PER-CSA-02-001, Rev.10 | With | 24590-WTP-PER-CSA-02-001, Rev.11 |
| **Appendix 7.7- Engineering Specifications** | | | |

| | | | |
|---|---|---|---|
| Replace | 24590-WTP-3PS-AFPS-T0006, Rev.2 | With | 24590-WTP-3PS-AFPS-T0006, Rev.3 |
| **Appendix 7.9- Material Selection Documentation** | | | |
| Replace | 24590-WTP-PER-M-02-001, Rev.3 | With | 24590-WTP-PER-M-02-001, Rev.4 |
| **Appendix 13.1- Process Flow Diagrams** | | | |
| Add | 24590-BOF-M5-V17T-00011, Rev.0 | | |
| Add | 24590-BOF-M5-V17T-00013, Rev.0 | | |
| Add | 24590-BOF-M5-V17T-00012, Rev.0 | | |
| Add | 24590-BOF-M5-V17T-00014, Rev.0 | | |
| **Appendix 13.2- Piping and Instrumentation Diagrams (P&IDs)** | | | |
| Add | 24590-BOF-M6-DEP-00001002, Rev.0 | | |
| Add | 24590-BOF-M6-DEP-00009001, Rev.0 | | |
| Add | 24590-BOF-M6-DEP-00009002, Rev.0 | | |
| Add | 24590-BOF-M6-DEP-00009003, Rev.0 | | |
| Add | 24590-BOF-M6-DEP-00009004, Rev.0 | | |
| Add | 24590-BOF-M6-DEP-00009005, Rev.0 | | |
| Add | 24590-BOF-M6-DEP-00011001, Rev.0 | | |
| Add | 24590-BOF-M6N-DEP-00007 (Issued against 24590-BOF-M6-DEP-00009001/9003/9005) | | |
| Add | 24590-BOF-M6N-J21T-00002 (Issued against 24590-BOF-M6-DEP-00011001) | | |
| Add | 24590-BOF-M6N-DEP-00001 (issued against 24590-BOF-M6-DEP-00001002) | | |
| **Appendix 13.4- General Arrangement Drawings** | | | |
| Add | 24590-BOF-P1-25-00001, Rev.0 | | |
| **Appendix 13.11 - Independent, Qualified, Registered Professional Engineer (IQRPE) Reports** | | | |
| Add | 24590-CM-HC4-HXYG-00240-02-00017, Rev. 0 | | |
| **Appendix 13.13- Instrument Control Logic and Narrative Description** | | | |
| Add | 24590-BOF-PER-J-16-001, Rev.0 | | |
| **Appendix 13.18- Operating Documents** | | | |
| Add | 24590-BOF-PER-M-16-001, Rev.0 | | |
| Add | 24590-BOF-PER-M-16-003, Rev.0 | | |
| Add | 24590-BOF-PER-M-16-002, Rev.0 | | |
| **Administrative Record** | | | |
| Replace | 24590-WTP-PER-PR-03-001, Rev.1 | With | 24590-WTP-PER-PR-03-001, Rev.2 |
| Add | 24590-BOF-M3-V17T-00001002, Rev. 0 | | |
| Add | CCN 293458 (Mass Balance) | | |
| Add | 24590-BOF-M3-V17T-00001001, Rev. 0 | | |
| **Chapter 1- Part A Form** | | | |
| Replace | Dangerous Waste Permit Application Part A Form, Rev. 2 | With | Dangerous Waste Permit Application Part A Form, Rev. 3 |
| **Chapter 2- Topographic Map** | | | |
| Remove | Chapter 2 Topographic Map | | |
| Add | Figure 2A-1 | | |

Quarter Ending 12/31/2016 24590-BOF-PCN-ENV-15-002

| | | | |
|---|---|---|---|
| Add | Figure 2A-2 | | |
| Add | Figure 2A-3 | | |
| **Appendix 3A- Waste Analysis Plan** | | | |
| Replace | Appendix 3A Waste Treatment Plant Waste Analysis Plan | With | Appendix 3A Waste Treatment Plant Waste Analysis Plan |
| **Appendix 3B- Quality Assurance Project Plan** | | | |
| Replace | Appendix 3B Quality Assurance Project Plan | With | Appendix 3B Quality Assurance Project Plan |
| **Chapter 4- Process Information** | | | |
| Replace | Chapter 4 Process Information | With | Chapter 4 Process Information |
| **Chapter 4, Appendix 4A- Figures and Drawings** | | | |
| Replace | Appendix 4A Figures and Drawings | With | Figure 4A Figures and Drawings |
| **Chapter 4, Appendix 4E- Low-Activity Waste (LAW) Vitrification Facility** | | | |
| Replace | Appendix 4E Low-Activity Waste Vit. Facility | With | Appendix 4E Low-Activity Waste Vit. Facility |
| **Chapter 4, Appendix 4G- Direct Feed Low-Activity Waste (EMF)** | | | |
| Add | Direct Feed Low-Activity Waste (EMF) | | |
| **Chapter 4, Appendix 4H- Analytical Laboratory** | | | |
| Replace | Appendix 4H Analytical Laboratory | With | Appendix 4H Analytical Laboratory |
| **Chapter 4, Appendix 4I- Balance of Facilities** | | | |
| Replace | Appendix 4I Balance of Facilities | With | Appendix 4I Balance of Facilities |
| **Chapter 6 – Procedures to Prevent Hazards** | | | |
| Replace | Chapter 6 Procedures to Prevent Hazards | With | Chapter 6 Procedures to Prevent Hazards |
| **Appendix 6A- Inspection Schedule** | | | |
| Replace | Appendix 6A Inspection Schedule | With | Appendix 6A Inspection Plan |
| **Chapter 7 – Contingency Plan** | | | |
| Replace | Chapter 7 Contingency Plan | With | Chapter 7 Contingency Plan |
| **Appendix 7A- Emergency Response Plan** | | | |
| Remove | Appendix 7A Emergency Response Plan | | |
| **Chapter 8- Personnel Training** | | | |
| Replace | Chapter 8 Personnel Training | With | Chapter 8 Personnel Training |
| **Chapter 11- Closure Plan** | | | |
| Replace | Chapter 11 Closure Plan | With | Chapter 11 Closure Plan |

24590-WTP-PER-CSA-02-001:

- Added Figure 17 - Typical Details; Waterstops; EMF Buildings
- Added Figure 18 - Typical Details; Liner Plate and Grillage Support Details; EMF Buildings
- Added Figure 19 - Typical Details; Equipment Support and Ring Beam; EMF Buildings
- Added Figure 20 - Typical Details; Sumps; EMF Buildings
- Added Figure 21 - Typical Details; Wall Penetrations; EMF Buildings
- Added Figure 22 - Typical Details; Embed Plate, Stanchion Support, Subchange Room Interface; EMF Buildings
- Revised Sections 1 and 2 to include EMF related content

24590-WTP-3PS-AFPS-T0006:

Modified to incorporate 24590-WTP-FC-C-16-0090 by design

- Revised Section 7.5.2.1 to: When defects are in the finish coat, all areas sanded must be overcoated per the required dry film thickness in Appendix C Table 2 of this specification.

24590-WTP-PER-M-02-001:

- Clarified transfer lines source term and added AEA statement

24590-BOF-M5-V17T-00011

- Newly issued Process Flow Diagram for the Direct Feed Effluent Transfer System showing details of DEP-VSL-00001, DEP-VSL-00002, and DEP-VSL-00004A/B

24590-BOF-M5-V17T-00012

- Newly issued Process Flow Diagram for the Direct Feed Effluent Transfer System showing details of DEP-EVAP-00001, DEP-RBLR-00001, and associated pumps, filters, and condensers.

24590-BOF-M5-V17T-00013

- Newly issued Process Flow Diagram for the Direct Feed Effluent Transfer System showing details of DEP-VSL-00003A/B/C and associated pumps, preheaters, and primary/secondary HEPA filters

24590-BOF-M5-V17T-00014

- Newly issued Process Flow Diagram for the Direct Feed Effluent Transfer System showing details of DEP-VSL-00005A/B and associated pumps and filters.

24590-BOF-M6-DEP-00001002, 24590-BOF-M6-DEP-00009001, 24590-BOF-M6-DEP-00009002, 24590-BOF-M6-DEP-00009003. 24590-BOF-M6-DEP-00009004, 24590-BOF-M6-DEP-00009005, and 24590-BOF-M6-DEP-00011001

- Newly issued Piping & Instrumentation Diagrams for the DFLAW configuration/EMF process area sumps, pumps, filters, leak detection boxes and miscellaneous sumps.

24590-BOF-M6N-J21T-00002 (Issued Against 24590-BOF-M6-DEP-00011001)

- Drawing Change Notice- Miscellaneous changes to low-point drain vessel P&ID.

24590-BOF-M6N-DEP-00007 (Issued against 24590-BOF-M6-DEP-00009001/9003/9005)

- Drawing Change Notice- Miscellaneous title changes and removal of excess valve and pump references.

24590-BOF-M6N-DEP-00001 (issued against 24590-BOF-M6-DEP-00001002)

- Drawing Change Notice – Addition, removal and revision of offsheet connectors for leak detection.

24590-BOF-P1-25-00001

- Newly issued General Arrangement Plan at Elevation 0'0" showing the LAW Effluent Process Building and LAW Effluent Drain Tank Building.

24590-CM-HC4-HXYG-00240-02-00017

- Newly issued IQRPE Structural Integrity Assessment Report assessing the EMF secondary containment.

24590-BOF-PER-J-16-001

- Newly issued Permit Document describing the instrument control logic for sumps/pumps in the DFLAW EMF Process (DEP) System in the LAW effluent process and drain tank buildings.

24590-BOF-PER-M-16-001

- Newly issued Permit Document describing the EMF secondary containment system leak detection capabilities.

24590-BOF-PER-M-16-002

- Newly issued Permit Document describing the EMF waste removal criteria for the tank systems and miscellaneous unit systems secondary containment.

24590-BOF-PER-M-16-003

- Newly issued Permit Document describing the required EMF liner heights for the tank systems and miscellaneous unit systems secondary containment.

24590-WTP-PER-PR-03-001

- Revised to include Direct Feed Law operations

CCN 293458

- Newly issued Permit Document to provide an overview of the EMF process design.

24590-BOF-M3-V17T-00001002

- Newly issued Process Stream Table to support CCN 293458

24590-BOF-M3-V17T-00001001

- Newly issued Process Stream Table to support CCN 293458

Chapter 1 Dangerous Waste Permit Application Part A Form:

- Updated Part A language
- Added information on EMF Tanks and Miscellaneous Units

Chapter 2 Topography Map:

- Added EMF information
- Updated information on Figures 2A-2, 2A-2, and 2A-3

Appendix 3A Waste Treatment Plant Waste Analysis Plan:

- Updated waste analysis and analytical data language to include DFLAW configuration/EMF information
- Replaced current Revision 8C WAP version with 2013 Washington Department of Ecology Dangerous Waste Permit Application Requirements, publication 95-402 template
- Made text changes to improve clarity

Appendix 3B Appendix B Quality Assurance Project Plan:

- Updated quality assurance project plan language to include DFLAW configuration/EMF information
- Replaced current Revision 8C QAPP version with 2013 Washington Department of Ecology Dangerous Waste Permit Application Requirements, publication 95-402 template
- Made text changes to improve clarity

Chapter 4 Process Description:

- Updated to include DFLAW configuration/EMF information

- Made text changes to improve clarity and add additional operating information

Appendix 4A Figures and Drawings
- Updated Figures 4A-1 and 4A-3

Appendix 4E LAW:
- Updated to include DFLAW configuration/EMF information
- Made text changes to improve clarity and add additional operating information

Appendix 4G EMF:
- Added to include DFLAW configuration/EMF information

Appendix 4H Lab:
- Updated to include DFLAW configuration/EMF information
- Made text changes to improve clarity and add additional operating information

Appendix 4I BOF:
- Updated to include DFLAW configuration/EMF information
- Made text changes to improve clarity and add additional operating information

Chapter 6 Procedures to Prevent Hazards:
- Updated security, preparedness and prevention requirements, structures, and equipment language
- Replaced current Revision 8C Chapter 6 version with 2013 Washington Department of Ecology Dangerous Waste Permit Application Requirements, publication 95-402 template
- Updated to include DFLAW configuration/EMF information
- Made text changes to improve clarity and add additional operating information

Appendix 6A Inspection Schedule:
- Updated for inspection schedules and inspection tables
- Replaced current Revision 8C Chapter 6A version with 2013 Washington Department of Ecology Dangerous Waste Permit Application Requirements, publication 95-402 template
- Updated to include DFLAW configuration/EMF information
- Made text changes to improve clarity and add additional operating information

Chapter 7 Contingency Plan
- Replaced Revision 8C version with 2013 Washington Department of Ecology Dangerous Waste Permit Application Requirements, publication 95-402 template.
- Combined information from Appendix 7A into Chapter 7.
- Updated to include DFLAW configuration/EMF information
- Made text changes to improve clarity

Appendix 7A Emergency Response Plan:
- Removed entire Appendix 7A as information from Appendix 7A was added into Chapter 7

Chapter 8 Personnel Training:
- Updated training language
- Replaced current Revision 8C Chapter 8 version with 2013 Washington Department of Ecology Dangerous Waste Permit Application Requirements, publication 95-402 template
- Updated to include DFLAW configuration/EMF information
- Made text changes to improve clarity

Chapter 11 Closure Plan:

Quarter Ending 12/31/2016 24590-BOF-PCN-ENV-15-002

- Updated to include DFLAW configuration/EMF information
- Made text changes to improve clarity

This DWP component may be re-evaluated to confirm design adequacy. If the re-evaluation results in future design changes, the changes will be reviewed by Ecology in subsequent permit modifications.

| WAC 173-303-830 Modification Class: | Class 1 | Class [1]1 | Class 2 | Class 3 |
|---|---|---|---|---|
| Please mark the Modification Class: | | | | X |

Enter relevant WAC 173-303-830, Appendix I Modification citation number: WAC 173-303-830 Appendix I G.5.a

Enter wording of WAC 173-303-830, Appendix I Modification citation: "That require additional or different management practices, tank design, different fire protection specifications, or significantly different tank treatment process from that authorized in the permit"

| | |
|---|---|
| Modification Approved/Concur: [X] Yes [ ] Denied (state reason below)<br>Reason for denial: | Reviewed by Ecology:<br>S. Dahl 9/5/17<br>S. Dahl Date |

DEPARTMENT OF
ECOLOGY
State of Washington

# Response to Comments

## Modification of the *Hanford Facility Resource Conservation and Recovery Act Permit for the Treatment, Storage, and Disposal of Dangerous Waste,* Part III, Operating Unit Group 10 (WA7890008967) Waste Treatment and Immobilization Plant Effluent Management Facility Secondary Containment 8C.2017.1D

## May 22, 2017 through July 7, 2017

*Summary of a public comment period and responses to comments*

September 2017
Publication no. 17-05-006

## PUBLICATION AND CONTACT INFORMATION

This publication is available on the Department of Ecology's (Ecology) website at https://fortress.wa.gov/ecy/publications/SummaryPages/1705006.html

For more information contact:

Dan McDonald, Tank Waste Treatment Project Manager
Nuclear Waste Program
3100 Port of Benton Boulevard
Richland, WA 99354

Phone: 509-372-7950
Email: Hanford@ecy.wa.gov

Washington State Department of Ecology - www.ecy.wa.gov

- Headquarters, Lacey 360-407-6000
- Northwest Regional Office, Bellevue 425-649-7000
- Southwest Regional Office, Lacey 360-407-6300
- Central Regional Office, Yakima 509-575-2490
- Eastern Regional Office, Spokane 509-329-3400

Ecology publishes this document to meet the requirements of Washington Administrative Code 173-303-840 (9).

*If you need this document in a format for the visually impaired, call the Nuclear Waste Program at 509-372-7950. Persons with hearing loss can call 711 for Washington Relay Service. Persons with a speech disability can call 877-833-6341.*

# Response to Comments

## Modification of the *Hanford Facility Resource Conservation and Recovery Act Permit for the Treatment, Storage, and Disposal of Dangerous Waste,* Part III, Operating Unit Group 10 (WA7890008967) Waste Treatment and Immobilization Plant Effluent Management Facility Secondary Containment 8C.2017.1D

## May 22, 2017 through July 7, 2017

Department of Ecology
Nuclear Waste Program
3100 Port of Benton Boulevard
Richland, Washington 99354

*This page is purposely left blank.*

## TABLE OF CONTENTS

Introduction.....1
Reasons for Issuing the Permit .....1
Public Involvement Actions.....3
List of Commenters.....4
Attachment 1: Comments and Responses
Appendix A: Copies of All Public Notices

*This page is purposely left blank.*

## INTRODUCTION

The Washington State Department of Ecology's Nuclear Waste Program (NWP) manages dangerous waste within the state by writing permits to regulate its treatment, storage, and disposal. When a new permit or a significant modification to an existing permit is proposed, NWP holds a public comment period to allow the public to review the change and provide formal feedback. (See Washington Administrative Code [WAC] 173-303-830 for types of permit changes.)

The Response to Comments is the last step before issuing the final permit, and its purpose is to:

- Specify which provisions, if any, of a permit will become effective upon issuance of the final permit, providing reasons for those changes.
- Describe and document public involvement actions.
- List and respond to all significant comments received during the public comment period.

### This Response to Comments is prepared for:

| | |
|---|---|
| Comment period: | Effluent Management Facility Secondary Containment, 8C.2017.1D<br>May 22, 2017 through July 7, 2017 |
| Permit: | *Hanford Facility Resource Conservation and Recovery Act (RCRA) Permit for the Treatment, Storage, and Disposal of Dangerous Waste, Part III, Operating Unit Group 10 (WA7890008967), Waste Treatment and Immobilization Plant* |
| Permittees | U.S. Department of Energy, Office of River Protection (USDOE-ORP) and Bechtel National Inc. (BNI) |
| Original issuance date: | September 27, 1994 |
| Effective date: | October 5, 2017 |

To see more information related to the Hanford Site and nuclear waste in Washington, please visit our website: www.ecy.wa.gov/programs/nwp.

## REASONS FOR ISSUING THE PERMIT

The Effluent Management Facility (EMF) is being built to support the Direct Feed Low Activity Waste (DFLAW) configuration. The EMF allows for the processing of effluent waste from the Low Activity Waste Facility and Analytical Laboratory prior to the operation of the High Level Waste and Pretreatment Facilities. This DFLAW configuration feeds waste directly from the Low Activity Waste Pretreatment System Facility to the Low Activity Waste Facility.

When the High Level Waste and Pretreatment facilities become operational, the Waste Treatment Plant will change to the baseline configuration. It is anticipated that when the Waste Treatment Plant is operating in the baseline configuration, EMF will not be operated. However, it will remain in standby until the treatment of the waste has been completed.

DFLAW operations are designed to operate for ten years. This allows time to resolve technical issues with the high level waste and pretreatment processes and finish the construction of those facilities.

This proposed permit modification addresses the design and construction of the secondary containment systems for the permitted tanks, vessels, miscellaneous units, and ancillary equipment in the EMF. There are five permitted secondary containment systems in the EMF located at the (-) 39' and 0' elevations. The secondary containment systems are provided with sloped liners to direct any liquids to secondary containment sumps.

All secondary containment systems meet WAC 173-303-640(4) waste removal criteria. The secondary containment systems are capable of detecting and collecting a release of liquid and include nine permitted secondary containment sumps.

The secondary containment systems satisfy WAC-173-303-640(4) leak detection criteria, and all secondary containment systems are designed and will be operated to contain 100% capacity of the largest dangerous or mixed waste tank or vessel within its boundary.

This modification is applicable to three buildings (listed below) and a stack at EMF.

- Process (Building 25)
- Low Point Drain (Building 25A)
- Utility (Building 26)

This proposed permit modification consisted of:

- Revised Part A
- Revised and new permit chapters
- Revised and new appendices, which include:
    - Process Flow Diagrams
    - Piping and Instrument Diagrams
    - General Arrangement Drawings
    - Civil, Structural and Architectural Criteria and Typical Details
    - Engineering Specifications
    - Material Selection Specifications
    - Independent, Qualified, Registered, Professional Engineer (IQRPE) report
    - Instrument Control Logic
    - Operating Documents

## PUBLIC INVOLVEMENT ACTIONS

Ecology and the Permittees encouraged public comment on the proposed EMF Secondary Containment Class 3 Modification (8C.2017.1D) during a 45-day public comment period held May 22, 2017, through July 7, 2017.

The following actions were taken to notify the public:

- Mailed a public notice announcing the comment period to 1,465 interested members of the public.
- Distributed copies of the public notice to members of the public at Hanford Advisory Board meetings.
- Placed a public announcement legal classified advertisement in the *Tri-City Herald* on May 21, 2017.
- Sent a notice announcing the start of the comment period to the Hanford-Info email list, which has 1,450 recipients.

The Hanford information repositories located in Richland, Spokane, and Seattle, Washington, and Portland, Oregon, received the following documents for public review:

- Public notice
- Transmittal letter
- Statement of Basis for the proposed 8C.2017.1D Permit Modification
- Draft  Permit Modification 8C.2017.1D

The following public notices for this comment period are in Appendix A of this document:

1. Statement of Basis
2. Focus Sheet
3. Classified advertisement in the *Tri-City Herald*
4. Notice sent to the Hanford-Info email list

## LIST OF COMMENTERS

### Commenter Identification:

The table below lists the names of organizations or individuals who submitted a comment on the EMF Secondary Containment Permit modification (8C.2017.1D). The comments and responses are in Attachment 1.

| Commenter | Organization |
|---|---|
| Anonymous | Citizen |
| Mike Conlan | Citizen |
| Scott Kiffer | Citizen |
| Confederated Tribes and Bands of the Yakama Nation | Tribal |

## ATTACHMENT 1: COMMENTS AND RESPONSES

### Description of Comments:

Ecology accepted comments from May 22, 2017 through July 7, 2017. This section contains the comments that we received during the public comment period and our responses, as required by RCW 34.05.325(6)(a)(iii). Comments are grouped by individual and each comment is addressed separately.

## Comment from: Anonymous Citizen

I-1-1

DESIGN THAT AFFECTS SECONDARY CONTAINMENT IS INCOMPLETE.
In order to have a defensible design for the effluent management facility secondary containment, it is important to understand the composition of the fluids that might leak to it. The means understanding the processes that occur in the Process Building. In the current permit change proposal (Statement of Basis, page 15), DOE/Bechtel submitted to Ecology for inclusion in the administrative record documents 24590-BOF-M3-V17T-00001001 and 24590-BOF-M3-V17T-00001002, Effluent Management Facility Process Flow Diagrams Process Stream Tables, Rev 0, (Systems DEP and DVP). In addition, DOE/Bechtel submitted, to be part of the Permit, four Process Flow Diagram Drawings, 24590-BOF-M5-V17T-00011, 12, 13,and 14.

Ecology should note that the process stream data tables in 24590-BOF-M3-V17T-00001001 and 24590-BOF-M3-V17T-00001002 contain "TBD" as an entry 957 times. And "TBD" is entered at least once for stream properties for 60 of the 63 streams identified. This many "TBD" entries indicate the design cannot be complete because ORP/Bechtel do not understand the process conditions or chemistry. How were the drawings identified as Rev 0, ready for construction? Should they be Rev A, Preliminary?

In the Statement of Basis File, DOE/Bechtel provided a document to the administrative record, CCN-293458, that is identified as Overview of the Effluent Management Facility Process Design (Mass Balance). This is not the actual title. The actual title is "Overview of the Effluent Management Facility Process Design Update (Supersedes CCN 290401)." This document is only a list of assumptions and procedures. It takes the approach of "trust us, we combined a lot of spreadsheets." It does not provide adequate mass balance information. This report in no way allows evaluation of the DFLAW/EMF flow sheet. The feed tanks in the tank farms are not even identified. As a result, the quality of the data is indeterminate. Further, this document notes that "TBD" was deliberately used in the process flow diagrams to indicate where vendor information is MISSING and will be added later, during the design process. So by definition, the design is incomplete, and evaluation of chemistry against the materials selected for secondary containment is indeterminate. The process corrosion "data" must be questioned in light of the incomplete understanding of the process. CCN-293458 notes that corrosion control chemicals are to be added - and the identity of the chemicals and the amounts are not specified.

I-1-2

ALL WTP PROCESS FLOW DIAGRAMS SHOULD HAVE DATA TABLES
As shown above, process flow diagrams cannot be understood without having the chemical and physical properties provided in the data tables. Ecology should consider requiring the PFD data tables to be provided in the permit for the EMF and also/or every single PFD at WTP. Having the data tables associated together with the PFD drawings is a standard industry practice, according to information at the American Institute of Chemical Engineers Center for Chemical Process Safety, which uses the diagrams and data tables in the room during chemical hazards and operability studies. This combination was done previously for the ETF.

I-1-3

THE MATERIALS SELECTION DOCUMENT FOR EMF SECONDARY CONTAINMENT IS VAGUE
The permit modification request includes document 24590-WTP-PER-M-02-001, Rev 4, Material Selections for Building Secondary Containment/Leak Detection. The criteria in this document are inadequate. The word "chloride" is never mentioned, and the secondary containment for the EMF may be exposed to considerably corrosive solutions. The liner materials selected may not be robust enough. ORP/Bechtel commit to "flushing" liners if a spill is detected. This is an after the fact response (administrative control), not a safe by design liner. And there is no guarantee that a slow drip of corrosive solution will not occur - a drip that is never detected at a sump. The liner material may be inadequate. How does the liner material compare to the materials selected for the process equipment? How can the process equipment or the secondary equipment be specified when the flow sheet has 957 TBD entries?

I-1-4

RELIANCE ON ORP/BECHTEL CORRECTIVE ACTIONS IS IMPROPER
Ecology described in the Response to Comments document (Ecology Publication 17-05-003) that Ecology intends to continue to "engage" with the permittees to ensure that vulnerabilities and other issues are being addressed appropriately and corrective actions are being implemented. Ecology further referred to "improvements" in the WTP Quality Assurance and Corrective Action Management Plan. The plans and promises are ineffective, based on considerable past experience. As a result, safety problems and expensive rework have occurred over and over. Please see enclosed a sampling of the history of OIG, enforcement, and GAO reviews, which indicate that the improvement plans, which were cited frequently, did not and do not result in better work products. The design is incomplete, and Ecology should not accept "plans" as a means to approve this permit.

I-1-5

ECOLOGY'S CONCLUSION THAT THERE IS NO FRAUD IS INCORRECT
Ecology stated in the Response to Comments (Publication 17-05-003) that "simply put, there is no fraud ... " This statement has no basis. Only a Court/Jury can make the legal determination that no fraud occurred or continues to occur at WTP. DOE and Bechtel avoided having the determination of whether there is fraud at WTP, by settling the

Fraudulent Claims Act Case (2:13-cv-05013-EFS) for a payment of $125,000,000, before there could be a trial and judgment. As stated by the GAO2: "As part of the settlement agreement, the contractors admitted no wrongdoing, and the United States did not concede that its claims were not well founded ." The vulnerability and reality of fraud continue to exist for the EMF and its equipment. The taint remains.

On May 26, 2017 the ORP Chief of Staff emailed ORP staff to pass along the ORP Manager's advice regarding the value of professional legal liability insurance. This email noted that DOE would pay up to half the cost of the insurance for managers and supervisors.

2 See GAO-17-235, Department of Energy- Use of Leading Practices Could Help Manage the Risk of Fraud and Other Improper Payments, March 2017.

I-1-6

IMPACTS TO TANK FARM CORROSION ARE IGNORED

In order to have a defensible design for the effluent management facility, it is important to understand whether operation of the EMF will adversely impact other portions of the permitted facilities. Document RPP-RPT-59257 , Evaluation of EMF Evaporator Down Time Returns to Tank Farms shows that, when the EMF is offline, the EMF Evaporator Feed may be pumped to the tank farms, in order to keep the LAW melter running. This document advises that that Tank Farms reserve a minimum of 250,000 gallons of space to receive "corrosion controlled" EMF feed, and that planning should assume frequent periods when this will occur However, CCN-295275, from a March 27, 2017 meeting, shows that the corrosion impacts to the tank farms are not known. The impacts on the tank farms and the RPP System Planning, including the amounts and types of corrosion control chemicals needed are not known. The volume of waste returned to the tank farms could actually be greater, especially if the unknown corrosion chemical additions are included.

RPP-RPT-59257 and CCN-295275 show that DOE has no actual and complete provision for processing the feed to the EMF when the EMF is not operable . DOE is planning to dump the EMF evaporator feed to the tank farms when the EMF is out of service. The Tank Farms have not received this type of waste before. The EMF feed includes vitrification off-gas scrubber waste. If the EMF evaporator feed is not dumped to the tank farms during down times, the WTP will not be able to meet its contractual obligation to operate at least 70% of the time. The problems of cobbling together new processes such as LAWPS and EMF are fundamental and serious.

CCN-293458 further includes an alternate route to dispose of EMF evaporator concentrate to the tank farms, without identifying the impact to tank farms corrosion rates and risk. The concentrate contains even higher concentrations of chloride than the evaporator feed. DOE has not figured out the consequences to the DSTs or to DFLAW or to Pretreatment or HLW due to the return of these corrosive streams to the tank farms. Why construct something for which the process development work is so

woefully incomplete? How much more sodium will be added to the waste to control corrosion? How much more volume in total? What is the impact to the length and risk of operations?

There are several documents in the attached list that point out the risk of pursuing construction when there is inadequate process development. There is no pilot plant for the EMF. No evaporator test data are available to show successful evaporation of submerged bed scrubber bottoms and other off-gas streams. No corrosion tests have been conducted on the yet to be defined EMF process streams.

I-1-7

LIFE CYCLE FLOW SHEET IMPACTS ARE UNKNOWN

In order to have a defensible design for the effluent management facility secondary containment, it is important to have a complete understanding of the flow sheet for the life of the WTP, not just the next 10 years. What happens when the DFLAW removes millions of gallons of supernatant from the DSTs, such that the solution that was planned to transfer the HLW solids to PT is removed and its chemistry altered? The HLW was supposed to be a 10wt% slurry, with 90% being LAW feed. What are the consequences? To corrosion when the nitrates are selectively removed? To operations? To safety? What are the consequences of leaving void spaces for longer than intended in the old SSTs and DSTs? What is the increasing risk of subsidence? What are the consequences to the bases being used now to redesign HLW and PT? Will the re-designs need to be re-designed yet again to meet QA for the post-DFLAW chemistry impacts? Based on past experience - there will be unplanned and expensive rework to come.

I-1-8

A SUPPLEMENTAL ENVIRONMENTAL IMPACT STATEMENT IS NEEDED

The DFLAW Baseline Change, which de-couples Pretreatment and HLW from DFLAW is not in any form evaluated in the Tank Closure and Waste Management EIS. This is NOT among the alternatives analyzed. Therefore the unintended consequences and risks are NOT ANALYZED in the EIS. There is no system plan that shows the inexorable change in the chemistry of the WTP feed due to the early removal of LAW without the transfer of HLW. Ecology has said no update to the EIS is needed, but Ecology has not at all demonstrated which scenarios in the EIS provide coverage for this fundamental change or for the unnecessary exposure of workers. The TC&WM EIS does not evaluate the risk to workers as the tank farms processes cesium over and over and dumps it back to the tank farms to keep it out of DFLAW.

The TC& WM EIS does not evaluate the risks of the proposed packaging and potential offsite shipment of solidified EMF bottoms (a novel waste), or the impacts of this novel material when transferred to the tank farms. The risks and costs of implementing DFLAW are not in the EIS. The TC&WM EIS alternatives address only an integrated and simultaneous processing of HLW and LAW via Pretreatment.

An addendum to the EIS is required. No further construction of the EMF, which is specific to the DFLA W configuration, should occur until this action is evaluated in an EIS. DOE has adopted 40 CFR Parts 1500 to 1508 for the purposes of compliance with the National Environmental Policy Act (NEPA). The Council on Environmental Quality requires that, if an agency has made a substantial change in a proposed action that is relevant to environmental concerns, or if there are significant new circumstances or information relevant to environmental concerns and bearing on the proposed action or its impacts, a supplemental EIS must be prepared for an old EIS so that the agency has the best possible information to make any necessary substantive changes in its decisions regarding the proposal. See 40 CFR Section 1502.9(c).

The TC&WM EIS does not account for the change in risk or for the beyond belief increase in costs. Even now; the Tank Farms LAWPS facility to treat tank waste to feed DFLAW has increased in total project cost from $470 Million to $680 - $740 Million. ORP and Bechtel's considerable underestimate of the total project cost for LAWPS was documented in a letter from DOE HQ on May 22, 2017, based on an annual independent review.

The added LAWPS costs are in addition to the increase of $4.6 Billion in costs for LAW vitrification. Similarly increased costs to complete PT and HLW are a reality and but are not documented. And they are likely to be the same or greater, billions of dollars more each.

Per 40 CFR 1500.1(b) NEPA procedures must ensure that environmental information is available to public officials and citizens before decisions are made and before actions are taken. The information must be of high quality. No supplemental EIS is available for the impacts of DFLAW to the ORP Life Cycle and mission. EMF and LAWPS construction should stop. ORP overstepped its authority in implementing the DFLAW decision.

I-1-9

ECOLOGY'S COMPLIANCE AGREEMENT WORSENS RISK

Ecology's response to prior comments on this subject indicates that Ecology's primary concerns are for (a) emptying tanks, and (b) vitrifying any part of the waste. Ecology has abandoned any pretense of concern regarding risk, and Ecology has abandoned any pretense of concern over the failure of integration of safety in the design, and the failure to address the indeterminate and shoddy quality of this project, which puts people at risk. A new EIS analysis is needed , and it should include new alternatives that include immediate filling of void spaces in the SSTS, followed by installation of robust barriers, as has been done in a couple of places already. Performance assessments show that these barriers are effective. The whole WTP architecture of the TC&WM EIS is out of date due to the irresponsible pursuit of DFLAW, and it is time to go back to the drawing board. This is supported by the enclosed list of documents. GAO noted in 2002 that it is not clear if the compliance agreements will be used to oppose DOE's latest initiative to focus on accelerating risk reduction (GAO-02-852T).

The SSTs and DSTs should be evaluated for closure under CERCLA as a landfill, without emptying the waste from them. This would be the least risk, the least cost, and the safest for the workers and the environment. Ecology's preference for all-glass exceeds the delegation to implement RCRA regulations. Nowhere in the RCRA regulations does it say that Ecology chooses the waste form for Hanford. Political manipulation of the waste form selection to require a high temperature process has created the "most complex project ever," as is frequently mentioned in requests for funds. Political selection of the waste form also increases the vulnerability to fraud and it has helped in the mismanagement $19B to date (See GAO-17-306).

I-1-10

DOE OVERSIGHT CONTINUES TO FAIL TO SERVE THE PUBLIC
DOE has cherry picked what reviews will be performed. On May 2, 2017, the DOE Office of Inspector General abruptly cancelled a planned audit of quality records at WTP. Further, the OIG has postponed a review of commercial grade dedication (CGD) for three years, according to their annual planning documents. Failure of commercial grade dedication to provide a sound basis that safety functions will be met was an issue resulting in a $170,000 fine in 2010, per a 2010 Consent Order, that noted this was a repeat issue from 2007. And the problems have continued, with subsequent ORP QA Findings for inadequate CGD. Yet the OIG is absent, despite noting in 2010, that: if there is a recurrence of nuclear safety deficiencies similar to those identified above, the Office of Enforcement may decide to pursue additional enforcement action. See pages 24-25 of the enclosed list.

Ecology has a firm basis to reject claims that DOE/ORP oversight and Bechtel corrective actions will make the EMF and the EMF secondary containment safe to start up and operate.

## Response to: Anonymous Citizen

I-1-1

Ecology believes all of the necessary design and technical information has been provided to support the Effluent Management Facility (EMF) Secondary Containment Modification. As part of the standard permitting process Ecology performs a completeness determination and an extensive technical deficiency evaluation. Ecology's review identified areas where additional design and technical detail were needed. In order to track and document the technical deficiencies, Ecology added Appendix 1.4, Interim Compliance Schedule - WTP Effluent Management Facility (EMF), to the permit. The addition of the EMF Interim Compliance Schedule will ensure the Permittees provide Ecology with the additional design documents and associated technical information on an agreed upon schedule. The Interim Compliance Schedule items detailed in Appendix 1.4 will need to be met prior to operation of the EMF.

I-1-2

The Permittees are not required by the Washington Administrative Code (WAC) regulations to include data tables in their Process Flow Diagrams.

I-1-3

WAC-173-303-640(4) requires that secondary containment vault areas be provided with an impermeable interior coating or lining that is compatible with the stored waste in order to prevent the migration of waste into the concrete. The Effluent Management Facility vault areas are being designed to meet the WAC requirement. Stainless steel cell liners are used in inaccessible areas or in areas where a potential spill of waste would require a higher level of corrosion protection. The vaults will be resistant to caustic solution corrosion consistent with the Materials Selection for Building Secondary Containment/Leak Detection (24590-WTP-PER-M-02-001) in the Dangerous Waste Permit Appendix 7.9.

I-1-4

Issues identified concerning the Office of Inspector General or the General Accounting Office are outside the scope of this modification. Ecology is not involved in the interactions between Department of Energy and these departments. Ecology maintains oversight of WTP activities associated with the Dangerous Waste Permit and will continue to meet with and engage the Permittees regarding the vulnerabilities identified in Condition Reports, the existing Design and Operability Reviews, and outstanding Technical Issues.

I-1-5

Ecology is not involved in the Department of Energy's litigation or interactions with the U.S. General Accounting Office.

I-1-6

Evaluation of corrosion impacts to equipment at the Tank Farms is outside the scope of this modification. The impacts of corrosion on the Tank Farm tanks will be assessed by the Tank Farms, and is part of the Double Shell Tank (DST) Waste Acceptance Criteria.

Each facility operating under the Direct-Feed Low-Activity Waste (DFLAW) configuration will maintain acceptance criteria for waste being received at their facility. Chemical parameters such as corrosivity are considered when a facility is establishing their waste acceptance criteria. Waste generated by WTP will need to meet the waste acceptance criteria of the receiving facility, before it can be shipped.

Over the 10-year estimated operations of DFLAW, WTP is forecasted to treat

approximately 20 million gallons of waste. WTP is projected to return approximately one million gallons of liquid waste to the DSTs. Half of the waste is expected to be generated from LAW offgas effluent and the remainder is estimated to be made up of corrosion conditioning chemicals. The Permittees are continuing to perform studies with the intention of reducing the amount of waste returned to the DSTs.

I-1-7

The evaluation of impacts to the Single Shell Tanks, Double Shell Tanks, and other facilities is outside the scope of the modification.

The Department of Energy and its contractors are assessing the Integrated Flowsheets and waste feed criteria under the DFLAW and baseline configurations. The results of these evaluations will be reflected in the WTP operating permit.

I-1-8

The Department of Energy evaluated the DFLAW concept in the Final Tank Closure and Waste Management EIS and concluded that it was bounded by the analysis in Alternative 2B.

I-1-9

Ecology is working to ensure that long-term storage, treatment and disposal of the waste is protective of human health and the environment. The DFLAW configuration will support the project's ability to vitrify waste as early as 2023. Thereby, reducing the risk associated with liquid waste in the Tank Farms.

The Department of Energy evaluated the DFLAW concept in the Final Tank Closure and Waste Management EIS and concluded that it was bounded by the analysis in Alternative 2B. Any necessary engineering or administrative measures required for the Tank Farms will be documented and evaluated separate from this permit modification.

I-1-10

Ecology is not involved in the Department of Energy's (DOE) interactions with the DOE Office of Inspector General. As stated in previous response to comment documents DOE performed an audit of the Commercial Grade Dedication (CGD) program in 2015 that resulted in a change to the WTP CGD program. At the end of the DOE audit, several actions were identified, resulting in the development of a new program that aligns with the DOE requirements.

Compensatory measures were put in place until Subject Matter Experts were identified, vendor documentation was resubmitted, and required procedures were revised. This is a

DOE requirement and the DOE has determined that the revised CGD program has been successfully implemented. WTP Project is continuing to implement the Commercial Grade Dedication Program developed by BNI, and approved by DOE.

Oversight of Bechtel is a requirement of the Department of Energy under Federal Acquisition Requirements.

Documentation that is provided to Ecology to support the permitting of the EMF Facility is independently reviewed and evaluated by Ecology to determine if the necessary regulatory requirements are met prior to issuance of a permit.

### Comment from: Mike Conlan

I-2-1

1. Remove all nuclear waste,
2. Do not allow anymore nuclear waste into the facility,
3. Replace all the single storage tanks,
4. Stop all the nuclear leakage entering the Columbia River

### Response to: Mike Conlan

I-2-1

Ecology is working to ensure that long-term storage, treatment and disposal of the waste is protective of human health and the environment.
The proposed permit changes are not to allow new waste, but to better manage the waste already at Hanford.
Single-shell tanks are not in the scope of this comment period. Ecology does agree the tanks pose a threat. We believe a better approach to addressing it is to remove the waste from the single-shell tanks and put it in the compliant double-shell tanks to prepare for eventual treatment in the Waste Treatment Plant now being built. The construction and operation of the Effluent Management Facility is a positive step to eventual treatment of tank waste currently stored at Hanford. Stopping any potential nuclear waste from impacting the Columbia River is not within the scope of the WTP Permit. Prevention of groundwater and surface water impacts are addressed in operations associated with other units.

### Comment from: Scott Kiffer

I-3-1

Ecology and the WTP Permittees are violating The False Claims Act (FCA), 31USC §3729(a)(1)(C); ORP and its Contractors are violating Federal Acquisition Regulations (FAR),
48 CFR 52.236-25; ORP Contractors and their Subcontractors are violating Washington State

Engineering Statutes, RCW 18.43.105; and the Director of Ecology is violating RCW 18.43.120.

As a result, the Washington State Hazardous Waste Management Program cannot provide
adequate enforcement of compliance to environmental regulations in the design of new hazardous waste facilities at the DOE Hanford site for the WTP, as required by the applicable
sections of RCRA and CERCLA.

### Response to: Scott Kiffer

I-3-1

Ecology permitting reviews all application material to ensure that the application meets Washington State Regulations and the requirements of the Hanford Dangerous Waste Permit to protect our air, land and water.

WTP is meeting Permit Condition II.L.2.e by providing design specification documents with their permit modifications. These specifications are included as appendices to the WTP Dangerous Waste Permit.

Consistent with Permit Condition III.10.E.9.b.i, IQRPE Reports provide the technical information on which the certification is based.

As stated in the Fact Sheet, Ecology is continuing with the phased permitting approach as originally intended for WTP. Modifications to the existing WTP Permit will be made, as appropriate, to accommodate the DFLAW process.

### Comment from: Confederated Tribes and Bands of the Yakama Nation

I-4-1

YN ERWM appreciates the clarifications to our prior comments as provided in the Responsiveness Summary. However, we are somewhat disappointed. Acknowledgement of the apparent value of the comment but non-incorporation of these responses within the documents per our requests seemingly indicates an unwillingness to take the time to present a best effort Permit (e.g. multiple responses: Thank you for your comment. It will be kept under consideration for a future revision and incorporated if applicable.) We also noted there were many technically astute comments provided by others, especially those related to design, risk or safety concerns that we felt were not robustly addressed. In the future, we hope these types of concerns will be responded to with more depth.

We remain in objection with the inclusion of any language within any of the WTP supporting documents stating Ecology's agreement with the permitting and approval for long-term storage of TRU waste on the Hanford site.

I-4-2

- Edit III.10.M.5.g to include required compliance with WAC 173-303-640(4)(b)(ii) &173-303-640(4)(b)(iii & iv) Condition III.10.M.5.j is appropriate, but nothing compels the Permittee to design to meet these WACs as they proceed with design. The Compliance Schedule does require submittals for these, but to comply with the Permit it must be within the Conditions of the Permit, not just the Compliance Schedule.

- Edit III.10.M.5.g to state required compliance with WAC 173-303-640(4)(d).

- Edit III.10.M.5.g to include required compliance with WAC 173-303-640(4)(e). YN does not support the use of 'special coatings' for those areas containing Miscellaneous Unit equipment. The Permittee cannot just jump to use of WAC 173-303-640(4)(e)(ii)(C) without obtaining a variance. This is not a vault system. See WAC 173-303-640( 4)(g & h).

- Edit III.10.M.5.g to include required compliance with WAC 173-303-640(4)(f).

- Edit III.10.M.5.g to clarify where within the Permit Conditions compliance with WAC 173-303-810(14) is met.

I-4-3

Edit III.10.M.9. Compliance Schedule to include dates if feasible.

I-4-4

Clarify why Effluent Management Facility Miscellaneous Treatment Unit Subsystems Table 6A-6 'Inspection' and 'Frequency' columns are not populated. YN requests 'Frequency' to be daily for these.

I-4-5

Delete any discussions of new treatment standards to Hanford tank wastes within the WTP WAP. This needs to be fully vetted by the public prior to any preparation of a petition by WTP staff.

I-4-6

Ecology's use of Guidance for Preparing Waste Sampling and Analysis Documents and QA/QC Requirements at Nuclear Waste Sites should not hinder use of its Omnibus Authority to require additional sampling (i.e. aliquots of split samples for WTP analysis) prior to waste acceptance at the DFLAW facility or the identification of designation of secondary waste stream disposal and treatment path. YN requests Ecology edit the WTP WAP to include this additional sampling requirements and the identification of designation of secondary waste stream disposal and treatment paths.

I-4-7

Clarify how there is ensured EMF operations and coordination with LAW Permit Conditions (e.g. III.10.H.5.f).

**Response to: Confederated Tribes and Bands of the Yakama Nation**

I-4-1

We are sorry to hear that you feel Ecology did not adequately address some of the comments you provided on the Waste Analysis Plan (WAP) during the first public comment period for this Class 3 Modification. As noted in the Response to Comment document, Ecology has developed an Interim Compliance Schedule for the EMF. Interim Compliance Schedule Item EMF-3 requires WTP to "Update and submit for approval the Waste Analysis Plan and associated Quality Assurance Project Plan (Chapter 3A and 3B) to Ecology for review and approval." This Interim Compliance Schedule Item will need to be completed prior to operations of the facility. The comments provided specific to the WAP will be reviewed, evaluated, and addressed at that time.

Ecology appreciates the Yakama Nation's position regarding long term storage of TRU waste at Hanford. There is no language included in this permit modification that makes reference to Ecology's permitting and/or approval of long-term storage of TRU waste on the Hanford Site.

I-4-2

The Permittees are required to design Treatment, Storage, and Disposal facilities in accordance with all applicable WAC requirements. Permit Condition III.10.M.9.b.ii requires the Permittees to follow WAC 173-303-640(4)(b) through (f). Your requested edit has already been addressed in this EMF specific permit condition (III.10.M.9.b.ii). The Permittees are compelled and required to comply with their permit conditions.

Permit Condition III.10.M.5.g applies to Miscellaneous Treatment Units and WAC 173-303-640(4)(d) is a requirement specific to Tank Systems. Permit Condition III.10.M.9.b is specific to the secondary containment and leak detection requirements for the EMF Miscellaneous Unit and requires compliance with WAC 173-303-640, in accordance with WAC 173-303-680.

The Permittees are not pursuing a variance, and Permit Condition III.10.M.5.h requires impermeable coatings for all tank systems.

Permit Condition III.10.M.5.g applies to Miscellaneous Treatment Units and WAC 173-303-640(4)(f) is a requirement specific to Ancillary Equipment. Permit Condition III.10.M.9.b is specific to the secondary containment and leak detection requirements for the EMF Miscellaneous Unit and requires compliance with WAC 173-303-640, in accordance with WAC 173-303-680.

Compliance with WAC 173-303-810(14) is addressed in Permit Condition III.10.C.2.a, which applies to all WTP facilities.

I-4-3

Compliance Schedule dates are identified in Appendix 1.4, Interim Compliance Schedule - WTP Effluent Management Facility (EMF).

I-4-4

We appreciate the Yakama Nation's suggestion for inspection frequencies. In order to meet Interim Compliance Schedule Item EMF-4, Permittees will have to populate Table 6A-6 for Inspection Schedules.

I-4-5

The text included in the WAP Section 3A.6 is not new language to the WTP Permit. Ecology agrees, all proper regulatory requirements will be followed to ensure that any new treatment standards are reviewed and approved prior to incorporation into the WTP Permit.

I-4-6

Please see Chapter 3B, Quality Assurance Project Plan (QAPP) for Waste Analysis Plan for more information on the characterization of the waste feed and the characterization of secondary waste streams. As required by Appendix 1.4, Interim Compliance Schedule Item, EMF-3 the Waste Analysis Plan and associated Quality Assurance Project Plan will need to be updated and submitted for Ecology for review and issued for public comment prior to operation of the EMF. In order to ensure Quality Assurance and Quality Control, Ecology has the authority to request split samples at the facility.

I-4-7

Coordination between the LAW and EMF facilities will be ensured via the Permittee submittal of LAW and EMF Operating Permit Modifications. Ecology and the public will have an opportunity to review how the Permittees will ensure safe and compliant operations of the DFLAW configuration.

## APPENDIX A: COPIES OF ALL PUBLIC NOTICES

Public notices for this comment period:

1. Statement of Basis
2. Focus Sheet
3. Classified advertisement in the *Tri-City Herald*
4. Notice sent to the Hanford-Info email list

DEPARTMENT OF
ECOLOGY
State of Washington

# STATEMENT OF BASIS

**Proposed Permit Modification of the**
***Hanford Facility Resource Conservation and Recovery Act Permit, Dangerous Waste Portion, Revision 8C, for the Treatment, Storage, and Disposal of Dangerous Waste,***
**Part III, Operating Unit Group 10, Waste Treatment and Immobilization Plant,**
**WA7890008967**

May 2017

This page intentionally left blank.

# STATEMENT OF BASIS

## Proposed Permit Modification of the *Hanford Facility Resource Conservation and Recovery Act Permit, Dangerous Waste Portion, Revision 8C, for the Treatment, Storage, and Disposal of Dangerous Waste*, Part III, Operating Unit Group 10, Waste Treatment and Immobilization Plant, WA7890008967

### Permittees

United States Department of Energy
Office of River Protection
PO Box 450
Richland, Washington 99352

Bechtel National, Inc.
2435 Stevens Center Place
Richland, Washington 99354

The Washington State Department of Ecology (Ecology) developed this Statement of Basis to fulfill the requirements of Washington Administrative Code (WAC) 173-303-840(2)(f)(iv).

The Statement of Basis provides information on Ecology's decision to modify the *Hanford Facility Resource Conservation and Recovery Act Permit, Dangerous Waste Portion, Revision 8C, for the Treatment, Storage, and Disposal of Dangerous Waste,* Part III, Operating Unit Group 10, Waste Treatment and Immobilization Plant (WTP), hereafter called the "WTP Permit."

This permit modification includes supporting technical information and engineering drawings for the design and construction of the secondary containment of the Effluent Management Facility (EMF) within the WTP.

The EMF is being built to support the Direct Feed Low Activity Waste (DFLAW) configuration. The EMF allows for the processing of waste at the Low Activity Waste (LAW) Vitrification Facility and Analytical Laboratory to start prior to the operation of the High-Level Waste (HLW) and Pretreatment (PT) Facilities. This DFLAW configuration feeds waste directly from the Low-Activity Waste Pretreatment System (LAWPS) to the LAW Facility. When the PT and HLW Vitrification facilities become operational, WTP will change to the baseline configuration. When the WTP is operating in the baseline configuration, it is anticipated that the EMF will not be operated. However, it will remain in standby until the treatment of the waste has been completed. DFLAW operations are designed to operate for ten years. This allows time to resolve technical issues with the HLW and PT processes and finish the construction of those facilities.

This proposed permit modification incorporates technical detail in the chapters within the WTP Permit. Ecology has drafted an Interim Compliance Schedule for EMF that is specific to the design, construction and eventual operations of the facility. Ecology has also drafted associated permit conditions and included them with this draft modification. Additionally, the appendices and figures have been revised, supporting information has been incorporated and format changes have been addressed where needed, in this modification.

Ecology chose to prepare a Statement of Basis as described in WAC 173-303-840(2)(f)(iv), rather than a Fact Sheet.

We prepared a Statement of Basis for previous major WTP permit modifications. This process will be followed for all permit modifications that incorporate similar design package information and other changes to the WTP Permit Conditions.

This Statement of Basis is divided into four sections:

1.0 Hanford Facility Resource Conservation and Recovery Act Permit (Site-wide Permit).
2.0 The WTP Permitting Process.
3.0 Procedures for Reaching a Final Decision on the Draft WTP Permit Modification.
4.0 Proposed Modifications to the WTP Permit.

Also included at the end of the Statement of Basis is a table, listing the design documents and drawings submitted by the permittees for incorporation into the WTP Permit.

## 1.0 HANFORD FACILITY RESOURCE CONSERVATION AND RECOVERY ACT PERMIT (SITE-WIDE PERMIT)

Ecology issued the Site-wide Permit in 1994. The Site-wide Permit provides standard and general facility conditions, as well as unit-specific conditions for the operation, closure, and post-closure care of mixed and dangerous waste Treatment, Storage, and Disposal (TSD) units at Hanford. Approximately 40 TSD units are operating or closing under Resource Conservation and Recovery Act final status standards.

Conditions of the Site-wide Permit are presented in six parts:

| | |
|---|---|
| Part I | Standard Conditions. |
| Part II | General Facility Conditions. |
| Part III | Unit-Specific Conditions for Final Status Operating Units. |
| Part IV | Corrective Action for Past Practice Units. |
| Part V | Unit-Specific Conditions for Units Undergoing Closure. |
| Part VI | Unit-Specific Conditions for Units in Post-Closure. |

The WTP TSD Unit was added to Part III of the Site-wide Permit on September 25, 2002. The WTP Permit portion was effective on October 25, 2002. The WTP TSD Unit is currently being constructed under final permit status standards.

The Washington State Dangerous Waste Regulations in WAC 173-303-830 describe the types of changes or modifications that may be made to a Dangerous Waste Permit issued by Ecology.

The WTP Permit is modified as needed, typically one or more times a year, to incorporate Class 1, [1]1, 2, and 3 modifications; Agency-Initiated modifications; and minor changes in grammar, consistency, and presentation.

## 2.0 THE WTP PERMITTING PROCESS

The Permittees and Ecology are using a phased (or stepped) approach to permit the WTP TSD Unit. The first phase was completed on September 25, 2002, with issuance of a final Dangerous Waste Permit allowing construction of the LAW, PT, HLW, LAB, and BOF facilities to start.

This second phase of permitting is included in the compliance schedule, and requires the Permittees to submit design and other information for Ecology approval before regulated portions of the WTP TSD Unit are constructed.

A WTP Interim Compliance Schedule for the United States Department of Energy provides Ecology additional detailed information addressing the submittal of design documents necessary to support construction of the rest of the WTP TSD Unit, and its eventual operation.

The third phase of permitting is implementation of the last portion of the compliance schedule. This requires updating portions of the Dangerous Waste Permit Application and then modifying the WTP Permit prior to facility start-up operations. These portions (for example, Contingency Plan, Closure Plan, and Training Plan) of the WTP Permit are operational in nature and cannot be completed before the design is nearly complete.

When the three phases of permitting are completed, the WTP TSD Unit will comply with all the applicable requirements of WAC 173-303. Then, after receiving written permission from Ecology, the Permittees can begin treatment and storage of dangerous and mixed waste at the WTP.

Originally, the design submittals (second permitting phase) were structured to allow the Permittees to provide design information in roughly the same order as the WTP facilities are constructed.

The design packages start at the base level of the facilities (below-grade levels) and are submitted for regulated areas of each level before construction begins. This process was adjusted for some design packages. When the facility process systems are installed on more than one level, the design packages will address the associated components for each level. This prevents confusion caused by one process system description being segmented into multiple design packages.

The WTP Permit organizes design packages into three general groups by the type of regulated equipment:

1. Primary containment (i.e., tanks, miscellaneous units [evaporators and melters], and containment buildings).
2. Secondary containment.
3. Other associated regulated equipment (i.e., ancillary equipment, equipment associated with miscellaneous units, and instrumentation).

Using tank systems as an example, secondary containment packages include details of the design of secondary containment that must be in place in regulated areas when the floors and walls are built for that level of each facility (for example, the floor slope, and sump locations).

The installation of tanks and other large equipment usually follows construction of the floors and walls. Therefore, a tank package on that level will be included in the WTP Permit before installation. The tank package would contain, for example, structural details for those tanks or miscellaneous units showing nozzle locations, unit volumes, and tank shell thickness.

The last equipment usually installed on a level for a tank system is the ancillary equipment (for example, piping, pumps, process instrumentation, and electrical equipment). Therefore, the ancillary equipment package provides details for the equipment on that level that will be included in the WTP Permit before installation. Information in the package would include, for example, materials of construction, and pump types and their operating limits.

Because each WTP facility consists of multiple levels, many design packages are required. Of the estimated 180 design packages needed for WTP, approximately 40 remain to be incorporated in the WTP Permit.

The WTP Permit allows Permittees to reference previously submitted design information, therefore some design packages may consist mostly of references to information already provided.

The Effluent Management Facility (EMF) is an additional facility that is being incorporated into the WTP Operating Unit Group 10. Therefore, it will be permitted in the same phased approach as the rest of the WTP TSD Units and will have an associated Interim Compliance Schedule specific to the EMF. This draft modification is limited to the design and construction of the secondary containment of the EMF.

## 3.0 PROCEDURES FOR REACHING A FINAL DECISION ON THE DRAFT WTP PERMIT MODIFICATION

The Washington State Hazardous Waste Management Act (Chapter 70.105, Revised Code of Washington) and the rules declared in WAC Chapter 173-303 regulate the management of dangerous waste in Washington State. WAC 173-303-800 requires facilities that treat, store, and/or dispose of dangerous waste to obtain a permit for these activities.

Regulatory requirements for public notice and involvement on permit modifications are described in WAC 173-303-840(3) and (4). On November 28, 2016 the permittees submitted a Class 3 permit modification request to Ecology for the Secondary Containment of the EMF, which included updated chapters, appendices and design documents. The Permittees held a public comment period from November 28, 2016 through January 27, 2017. The Permittees also held a public meeting on January 9, 2017 at the Richland Public Library.

After review of the USDOE Class 3 permit modification, Ecology issued a completeness review letter on February 3, 2017 in accordance with WAC 173-303-830(4)(c)(vi) and WAC 173-303-840(1)(b) identifying the issues that were incomplete and the technical deficiencies. Additionally, Ecology issued letter on March 31, 2017 in accordance with WAC 173-303-840(1)(b). After working with the Permittees to resolve the items that were incomplete and the technical deficiencies, Ecology proceeded with drafting the permit to support a second public comment period.

Public comments from the Permittees' comment period are addressed by Ecology in a response to comments document. This response to comments document accompanies the draft permit modification. The response to comments document associated with this USDOE 60-day public comment period is available online at http://ecy.wa.gov/programs/nwp/commentperiods.htm.

As required by WAC 173-303-840(3)(d), draft modifications to the WTP Permit will have at least a 45-day public comment period. The public comment period for this proposed permit modification begins on May 22, 2017, and ends on July 7, 2017.

Comments must be post-marked, received by e-mail, or hand-delivered no later than close of business (5:00 p.m. PST) July 7, 2017. Direct all written comments to:

Mandy Jones
Washington State Department of Ecology
3100 Port of Benton Blvd.
Richland, Washington 99354

Electronic comment link: http://wt.ecology.commentinput.com/?id=56Thj

In accordance with WAC 173-303-840(10)(c), when a permit is modified, only the conditions subject to modification are open for comment. All other aspects of the existing Permit remain in effect for the duration of the modification.

Ecology will consider and respond to all written comments on this permit modification submitted by the deadline. Ecology will then make a final permit decision, which will become effective 30 days after Ecology provides notice of the decision to the Permittees and to all who commented. If the final decision includes substantial changes to the WTP Permit because of public comment, we will initiate a new public comment period.

A public hearing is not scheduled, but if there is enough interest, Ecology will consider holding one. To request a hearing or for more information, contact:

Joanna Morse
Washington State Department of Ecology
(509) 372-7880
E-mail address: hanford@ecy.wa.gov

After completion of the 45-day public comment period, Ecology will provide a response to comments document and a notification of the final permit decision to the Permittees and all others who commented. The final permit decision may be appealed within 30 days after issuance of that decision.

Copies of the WTP Permit, including the proposed permit modification, are available for review at the NWP Resource Center, USDOE Administrative Record, and Hanford Public Information Repositories. For additional information call (509) 372-7950 or email hanford@ecy.wa.gov.

## Administrative Record

**Richland**
Washington State Department of Ecology
Nuclear Waste Program Resource Center
3100 Port of Benton Boulevard
Richland, Washington 99354
Contact: Teresa Booth (509) 372-7950

United States Department of Energy
Administrative Record
2440 Stevens Drive
Richland, Washington 99354
Contact: Heather Childers (509) 376-2530

## Hanford Public Information Repositories

**Richland**
United States Department of Energy
Reading Room
2770 Crimson Way, Room 101L
Richland, Washington 99354
Contact: Janice Parthree (509) 375-3308

**Portland**
Portland State University
Branford Price Millar Library
1875 Southwest Park Avenue
Portland, Oregon 97207
Contact: Claudia Weston (503) 725-4542

**Seattle**
University of Washington
Suzzallo Library
PO Box 352900
Seattle, Washington 98195
Contact: Hilary Reinert (206) 543-5597

**Spokane**
Gonzaga University
Foley Center
502 East Boone Avenue
Spokane, Washington 99258
Contact: John Spencer (509) 313-6110

This Statement of Basis, Public Notice and information for the proposed permit modification is also available online at http://www.ecy.wa.gov/programs/nwp/commentperiods.htm. If special accommodations are needed for public comment, contact Ecology, at (509) 372-7950 or hanford@ecy.wa.gov.

## 4.0 PROPOSED MODIFICATIONS TO THE WTP PERMIT

This proposed permit modification contains the following engineering, design, and permitting detail. New or revised documents submitted with the modification are listed below. See Table 1 at the end of this document for the entire list of documents submitted by the Permittees to support this permit modification.

This proposed permit modification addresses the design and construction of the secondary containment systems that have been designed to hold the permitted tanks, vessels, miscellaneous units, and ancillary equipment that will be housed in the EMF. There are five permitted secondary containment systems in the EMF located at the (-) 39' and 0' elevations. The secondary containment systems are provided with liners that are sloped to direct liquids to secondary sumps. All secondary containment systems meet WAC 173-303-640(4) waste removal criteria. The secondary containment systems are capable of detecting and collecting a release of liquid and include nine permitted secondary containment sumps. All sumps have leak detection instrumentation with the ability to detect a release of liquid in the secondary containment system. The secondary containment systems satisfy WAC 173-303-640(4) leak detection criteria, and all secondary containment systems are designed and will be operated to contain 100% capacity of the largest dangerous or mixed waste tank or vessel within its boundary. This modification is applicable to the following buildings: the Process (Bldg. 25), Low Point Drain (Bldg. 25A) and Utility (Bldg. 26) buildings at the EMF.

This proposed permit modification consists of:

- New Interim Compliance Schedule Appendix 1.4 for EMF
- Revised Part A
- Revised Permit Conditions
- Revised Permit Chapters
- New Permit Chapters (Chapter 2 and Chapter 4G)
- Revised Appendices and new Appendix 13 which include:
    - Process Flow Diagrams
    - Piping and Instrument Diagrams
    - General Arrangement Drawings
    - Civil, Structural and Architectural Criteria and Typical Details
    - Engineering Specifications
    - Material Selection Specifications
    - Independent, Qualified, Registered, Professional Engineer (IQRPE) report
    - Instrument Control Logic
    - Operating Documents

## 4.1 Incorporation of Class 1 and Class [1]1 Permit Modifications (PCNs) and Permit Equivalency Notices (PENs)

Previously approved Class 1 and Class [1]1 PCNs and PENs are incorporated through the Quarterly Modifications. There will be no PCNs or PENs incorporated through this proposed modification.

## 4.2 Supplemental Design Information

Table 1 lists the design information included in this proposed permit modification and the proposed location in the WTP Permit. At issuance of the final WTP Permit, Ecology will specify where each drawing or report resides in the WTP Permit.

Paper copies of the page changes to the WTP Permit that result from this modification will be placed in the Administrative Record.

The letter issuing the final WTP Permit decision to the Permittees and Hanford contractors will include the current WTP Permit with the modifications on a DVD.

## 4.3 Identifying Changes in this Proposed Permit Modification

As the WTP TSD Unit is constructed, Ecology will modify the WTP Permit for many reasons, including to clarify text, add new conditions, delete existing conditions, correct errors, or add information. To communicate the changes, proposed permit modifications will include page changes showing all significant proposed changes to the WTP Permit. The text to be deleted will be struck-out with a single line, and the new text will be redlined. Only the text being changed in the current modification will be indicated by redlines and strikeouts.

Newly added documents and drawings are provided for review in this proposed permit modification. New document and drawing numbers and titles are shown in redline/strikeout text in the affected appendix drawing lists.

When a WTP Permit modification is issued, “clean” pages incorporating permit modifications will be issued to the Permittees and placed in the Administrative Record. All redlines and strikeouts will be removed. Documents and drawings listed in the appendices will not be redlined and will be incorporated by reference only.

Ecology publication number 07-05-006, *Responsiveness Summary* (September 27, 2007), explains the reason for replacing permit version documents with source documents to which the WTP is constructed. Source documents are in a state of constant revision as design details are finalized and additional information is added to provide clarity and to correct typographical errors.

The Permittees use Document Change Notices (DCNs) to track changes not yet incorporated into source documents. In some cases, DCNs are issued at the time of Ecology’s review. These are not provided for public comment, but will appear in the next revision of the WTP Permit for review. Source documents have been replacing permit version documents since September 2007.

This page intentionally left blank.

## Table 1 – Design Information Submitted by Permittees

## For Incorporation into the WTP Permit

## Table of Contents

| Document Title | Document Number | Revision | Permit Condition | Included | Remarks |
|---|---|---|---|---|---|
| **Permit Chapters** | | | | | |
| Chapter 1, Part A | N/A | 3 | 173-303-806(4)(a)<br>173-303-806(4)(c)<br>173-303-806(4)(a)(i) | Y | Update to incorporate addition of EMF to the WTP |
| Chapter 2, Topographic Map | N/A | N/A | 173-303-806(4)(a)(xviii) | Y | Update to incorporate addition of EMF to the WTP |
| Appendix 3A, Waste Analysis Plan | N/A | N/A | 173-303-806(4)(a)(iii)<br>173-303-300(5) | Y | Update to incorporate addition of EMF to the WTP |
| Appendix 3B, Quality Assurance Project Plan | N/A | N/A | 173-303-806<br>173-303-335 | Y | Update to incorporate addition of EMF to the WTP |
| Chapter 4, Process Information | N/A | N/A | 173-303-806(4)(a) | Y | Update to incorporate addition of EMF to the WTP |
| Chapter 4A, Figure and Drawings | N/A | N/A | 173-303-806(4)(a) | Y | Update to incorporate addition of EMF to the WTP |
| Chapter 4E, LAW | N/A | N/A | 173-303-806(4)(a) | Y | Update to incorporate addition of EMF to the WTP |
| Chapter 4G, EMF | N/A | N/A | 173-303-806(4)(a) | Y | Update to incorporate addition of EMF to the WTP |
| Chapter 4H, Lab | N/A | N/A | 173-303-806(4)(a) | Y | Update to incorporate addition of EMF to the WTP |
| Chapter 4I, BOF | N/A | N/A | 173-303-806(4)(a) | Y | Update to incorporate addition of EMF to the WTP |
| Chapter 6, Procedures for Preventing Hazards | N/A | N/A | 173-303-806(4)(a)(vii)<br>173-303-350 | Y | Update to incorporate addition of EMF to the WTP |
| Chapter 6A, Inspection Schedule | N/A | N/A | 173-303-806(4)(a)(v)<br>173-303-320 | Y | Update to incorporate addition of EMF to the WTP |
| Chapter 7, Contingency Plan | N/A | N/A | 173-303-806(4)(a)(viii) | Y | Update to incorporate addition of EMF to the WTP |
| Chapter 7A, Emergency Response | N/A | N/A | 173-303-806(4)(a) | Y | Delete Chapter 7A, all content was incorporated into Chapter 7. |
| Chapter 8, Personnel | N/A | N/A | 173-303-806(4)(a)(viii) | Y | Update to incorporate addition of EMF to the WTP |

| Document Title | Document Number | Revision | Permit Condition | Included | Remarks |
|---|---|---|---|---|---|
| Chapter 11, Closure Plan | N/A | N/A | 173-303-806(4)(a)(xiii) | Y | Update to incorporate addition of EMF to the WTP |
| **Appendix 7.5 - Civil, Structural and Architectural Criteria and Typical Details** | | | | | |
| Permit Document – Secondary Containment Design | 25490-WTP-PER-CSA-02-001 | 11 | 173-303-640(4)(c) | Y | To be incorporated into Appendix 7.5 (Replacing Rev. 10) |
| **Appendix 7.7 – Engineering Specifications** | | | | | |
| Engineering Specifications of field applied Special protective Coating | 24590-WTP-3PS-AFPS-T0006 | 3 | 173-303-640-(3)(a)<br>173-303-806(4)(c) | Y | To be incorporated into Appendix 7.7 (Replacing Rev. 2). |
| Secondary Containment Areas | | | | | |
| **Appendix 7.9 – Material Selection Documentation** | | | | | |
| Permit Document – Material Selection for Building Secondary Containment/Leak Detection | 24590-WTP-PER-M-02-001 | 4 | 173-303-806(4)(c) | Y | To be incorporated into Appendix 7.9 (Replacing Rev. 3). |
| **Appendix 13.1 – Process Flow Diagrams** | | | | | |
| Process Flow Diagram – Direct Feed Effluent Transfer (System DEP) | 24590-BOF-M5-V17T-00011 | 0 | 173-303-640(3)(a)<br>173-303-806(4)(c) | Y | To be incorporated into Appendix 13.1 |
| Process Flow Diagram – Direct Feed Effluent Evaporator System (System DEP) | 24590-BOF-M5-V17T-00012 | 0 | 173-303-640(3)(a)<br>173-303-806(4)(c) | Y | To be incorporated into Appendix 13.1 |
| Process Flow Diagram – Direct Feed Concentrate Transfer (System DEP and DVP) | 24590-BOF-M5-V17T-00013 | 0 | 173-303-640(3)(a)<br>173-303-806(4)(c) | Y | To be incorporated into Appendix 13.1 |
| Process Flow Diagram – Direct Feed Process Concentrate Transfer (System DEP) | 24590-BOF-M5-V17T-00014 | 0 | 173-303-640(3)(a)<br>173-303-806(4)(c) | Y | To be incorporated into Appendix 13.1 |
| **Appendix 13.2 – Piping and Instrument Diagram (P&ID)** | | | | | |
| P&ID – BOF/EMF Direct Feed LAW EMF – Process System Low Point Drain Vessel Pump - DEP-PMP-00001A/B | 24590-BOF-M6-DEP-00001002 | 0 | 173-303-640(3)(a)<br>173-303-806(4)(c) | Y | To be incorporated into Appendix 13.2 |
| P&ID – BOF/EMF Direct Feed LAW EMF – Process System – Process Area Sumps – DEP-SUMP-00002A/B | 24590-BOF-M6-DEP-00009001 | 0 | 173-303-640(3)(a)<br>173-303-806(4)(c) | Y | To be incorporated into Appendix 13.2 |
| P&ID – BOF/EMF Direct Feed LAW EMF – Process System – Process Vessel Area Sumps – DEP-SUMP-00004A/B | 24590-BOF-M6-DEP-00009002 | 0 | 173-303-640(3)(a)<br>173-303-806(4)(c) | Y | To be incorporated into Appendix 13.2 |

| Document Title | Document Number | Revision | Permit Condition | Included | Remarks |
|---|---|---|---|---|---|
| P&ID – BOF/EMF Direct Feed LAW EMF – Process System – Miscellaneous Sumps – DEP-SUMP-00008 | 24590-BOF-M6-DEP-00009003 | 0 | 173-303-640(3)(a)<br>173-303-806(4)(c) | Y | To be incorporated into Appendix 13.2 |
| P&ID – BOF/EMF Direct Feed LAW EMF – Process System – Process Area Sumps – DEP-SUMP-00003A/B | 24590-BOF-M6-DEP-00009004 | 0 | 173-303-640(3)(a)<br>173-303-806(4)(c) | Y | To be incorporated into Appendix 13.2 |
| P&ID – BOF/EMF Direct Feed LAW EMF – Process System – Process Area Sumps – DEP-SUMP-00005A/B | 24590-BOF-M6-DEP-00009005 | 0 | 173-303-640(3)(a)<br>173-303-806(4)(c) | Y | To be incorporated into Appendix 13.2 |
| P&ID – BOF/EMF Direct Feed LAW EMF – Process System – Effluent System Leak Detection DEP-LOB-00001 Thru 00006 | 24590-BOF-M6-DEP-00011001 | 0 | 173-303-640(3)(a)<br>173-303-806(4)(c) | Y | To be incorporated into Appendix 13.2 |
| P&ID – BOF/EMF Direct Feed LAW EMF Vessel Vent Process System DVP-EXHR-00001A/B | 24590-BOF-M6-DVP-00001001 | 0 | 173-303-640(3)(a)<br>173-303-806(4)(c) | Y | To be incorporate into Appendix 13.2 |
| BOF/EMF Buildings SDJ Plant Room V&ID Exhaust Stack Monitoring System | 24590-BOF-M8-SDJ-00001 | A | 173-303-640(3)(a)<br>173-303-806(4)(c) | Y | To be incorporate into Appendix 13.2 |
| **Document Change Notices (DCNs)** | | | | | |
| Document Change Notice – Miscellaneous Changes to Low Point Drain Vessel and P&ID | 24590-BOF-M6N-DEP-00001 (issued against 24590-BOF-M6-DEP-00001002) | 0 | | Y | To be incorporated into Appendix 13.2 |
| Document Change Notice – Miscellaneous Title Changes and Removal of Auto/Manual on DEP-YC-8650 | 24590-BOF-M6N-DEP-00007 (issued against 24590-BOF-M6-DEP-00009001/9003/9005) | 0 | | Y | To be incorporated into Appendix 13.2 |
| Document Change Notice – Addition, Removal, and Revision of Off sheet Connection for Leak Detection | 24590-BOF-M6N-J21T-00002 (Issued against 24590-BOF-M6-DEP-00011001 | 0 | | Y | To be incorporated into Appendix 13.2 |
| **Appendix 13.4 – General Drawings** | | | | | |
| General Arrangement Plan – Balance of Facilities LAW Effluent Process BLDG. and LAW Effluent Drain Tank Bldg. General Arrangement Plan at Elevation 0FT – 0 IN | 24590-BOF-P1-25-00001 | 0 | 173-303-640(3)(a)<br>173-303-806(4)(c) | Y | To be incorporated into 13.4 |

| Document Title | Document Number | Revision | Permit Condition | Included | Remarks |
|---|---|---|---|---|---|
| Balance of Facilities LAW Effluent Utility Bldg. & LAW Effluent Electrical Bldg. General Arrangement Plan at Elev. 0'-0" | 24590-BOF-P1-26-00001 | 0 | 173-303-640(3)(a)<br>173-303-806(4)(c) | Y | To be incorporated into 13.4 |
| Balance of Facilities LAW Effluent Utility Bldg. & LAW Effluent Electrical Bldg. General Arrangement Sections A& B | 24590-BOF-P1-26-00002 | 0 | 173-303-640(3)(a)<br>173-303-806(4)(c) | Y | To be incorporated into 13.4 |
| **Appendix 13.11 – Independent, Qualified, Registered Professional Engineer (IQRPE) Reports** | | | | | |
| IQRPE Independent Assessment Report | 24590-CM-HC4-HXYG-00240-02-0017 | 0 | 173-303-640(3)(a)<br>173-303-806(4)(c) | Y | To be incorporated into 13.11 |
| **Appendix 13.13 – Instrument Control Logic and Narrative Description** | | | | | |
| Permit Document – System Logic Description for the Direct Feed LAW Effluent Management Facility Process System (DEP) | 24590-BOF-PER-J-16-001 | 0 | 173-303-640(4)(c)<br>173-303-806(4)(c) | Y | To be incorporated into Appendix 13.13 |
| **Appendix 13.18 – Operating Documents** | | | | | |
| Permit Document – Leak Detection Capability for EMF Facility | 24590-BOF-PER-M-16-001 | 0 | 173-303-806(4)(c) | Y | To be incorporated into Appendix 13.18 |
| Permit Document – Waste Removal Capacity for the Direct Feed LAW Effluent Management Facility (EMF) | 24590-BOF-PER-M-16-002 | 0 | 173-303-806(4)(c) | Y | To be incorporated into Appendix 13.18 |
| Permit Document – Dangerous Waste Permit (DWP) Liner height in the Effluent Management Facility (EMF) | 24590-BOF-PER-M-16-003 | 0 | 173-303-806(4)(c) | Y | To be incorporated into Appendix 13.18 |
| **Administrative Record** | | | | | |
| Permit Document – Prevention of Hydrogen Accumulation in WTP Tank Systems and Miscellaneous Treatment Unit Systems | 24590-BOF-PER-PR-03-001 | 2 | | N | To be incorporated into the Administrative Record (Replacing Rev. 1) |
| Effluent Management Facility Process Flow Diagrams Process Stream Tables (System DEP and DVP) | 24590-BOF-M3-V17T-00001002 | 0 | | N | To be incorporated into the Administrative Record |
| Overview of the Effluent Management Facility Process Design (Mass Balance) | CCN 293458 (Superseding 290073 and 29401) | NA | | N | To be incorporated into the Administrative Record |

| Document Title | Document Number | Revision | Permit Condition | Included | Remarks |
|---|---|---|---|---|---|
| Effluent Management Facility process Flow Diagrams Process Stream Tables (System DEP and DVP) | 24590-BOF-M3-V17T-00001001 | 0 | | N | To be incorporated into the Administrative Record |

# Ecology Proposes Changes to Waste Treatment Plant Design

The Washington State Department of Ecology (Ecology) is proposing a modification to the *Hanford Facility Resource Conservation and Recovery Act (RCRA) Permit*, Revision 8C. This change affects the *Dangerous Waste Portion for the Treatment, Storage, and Disposal of Dangerous Waste* for the Waste Treatment and Immobilization Plant (WTP Permit). The proposed change is located in Part III, Operating Unit Group 10.

The permittees are:

U.S. Department of Energy Office of River Protection
P.O. Box 450
Richland, Washington 99352

Bechtel National, Inc.
2435 Stevens Center Place
Richland, Washington 99354

This class 3 permit modification provides the technical information and engineering drawings to support the design and construction of the secondary containment for the Effluent Management Facility (EMF) within the WTP. The modification includes information for the following buildings at EMF: Process (Building 25), Low Point Drain (Building 25A) and Utility (Building 26).

This proposal is one of many changes to the original WTP Permit. Periodic updates allow the permittees to continue construction while designing other parts of the WTP. All modifications to the WTP Permit are classified by Ecology under Washington Administrative Code 173-303-830.

## Direct Feed LAW Configuration Overview

In order to initiate tank waste treatment by 2023, ORP developed a plan to begin feeding pre-treated low-activity tank waste directly to the WTP Low-Activity Waste (LAW) Vitrification Facility. This plan is called the Direct Feed Low-Activity Waste (DFLAW) configuration.

### Why It Matters

The proposed permit changes affect the Waste Treatment and Immobilization Plant (WTP). WTP will immobilize in glass 56 million gallons of dangerous radioactive and chemical waste stored in 177 underground storage tanks at Hanford.

Some waste from the tanks has polluted groundwater that flows toward, and can seep into, the Columbia River. Safely treating tank waste is an important goal to help protect people and the environment.

### Public Comment Period

May 22, 2017 -
July 7, 2017

### To Submit Comments

***New!*** Please submit comments electronically (preferred) via: http://wt.ecology.commentinput.com/?id=56Thj, send by U.S. mail, or hand-deliver to:

Mandy Jones
3100 Port of Benton Blvd.
Richland, WA 99354

### Public Meeting

A public meeting is not scheduled, but if there is enough interest, we will consider holding one. To request a meeting or for more information, contact:

Joanna Morse
509-372-7950
Hanford@ecy.wa.gov

### Special Accommodations

To request ADA accommodation, including materials in a format for the visually impaired, call the Nuclear Waste Program at 509-372-7950.

Persons with impaired hearing may call Washington Relay Service at 711.

Persons with speech disability may call TTY at 877-833-6341.

The DFLAW configuration supports treatment by allowing the LAW Vitrification Facility and the Analytical Laboratory (Lab) to begin treating waste prior to the startup of the Pretreatment (PT) Facility and High-Level Waste (HLW) Vitrification Facility. Although most of the WTP facilities required for the DFLAW configuration are complete or near completion, the plan does require construction of two new facilities:

1. Effluent Management Facility (EMF).
2. LAW Pretreatment System (LAWPS) Facility (not within the scope of this modification).

*The Waste Treatment Plant, commonly called the vit plant, in 2016 (photo courtesy of Bechtel).*

## Design Package for Effluent Management Facility Secondary Containment

The Effluent Management Facility (EMF) permit modification package 24590-BOF-PCN-EVN-15-002 addresses the design and construction of the secondary containment for the Process (Bldg. 25), Low Point Drain (Bldg. 25A) and Utility (Bldg. 26) buildings.

The DFLAW configuration is intended to be in operation for ten years. This allows time to resolve issues with the HLW and PT processes and finish the construction of those facilities. Once the HLW and PT facilities are completed, the WTP operations will shift to the original WTP baseline configuration and continue treatment of the tank waste. Once WTP is operating in the baseline configuration, EMF will discontinue operations. However, EMF will remain in cold stand-by until the treatment of tank waste has been completed.

The Direct Feed LAW Effluent Management Process (DEP) system within the EMF is in place to replicate some functions the Pretreatment Facility performed during baseline operations. Those functions will include management and treatment of the liquid effluent from the LAW and LAB Radioactive Liquid Waste Disposal systems. The major components of the DEP system include an evaporator, reboiler, three condensers, and nine regulated vessels, listed below:

- Evaporator (DEP-EVAP-00001)
- Reboiler (DEP-RBLR-00001)
- Condensers (DEP-COND-00001A/B/C)
- Low Point Drain Vessel (DEP-VSL-00001)
- Evaporator Feed Vessel (DEP-VSL-00002)
- Evaporator Concentrate Vessels (DEP-VSL-00003A/B/C)
- Overhead Sampling Vessels (DEP-VSL-00004A/B)
- Lag Storage Vessels (DEP-VSL-00005A/B)

Once effluents are treated at the EMF they may be transferred to one of three other facilities for further processing or storage. Those facilities are: the Tank Farms, the Liquid Effluent Retention Facility/Effluent Treatment Facility (LERF/ETF), or the LAW Vitrification Facility.

Future permit modifications to incorporate the major components of the DEP system into the WTP Permit will be documented in the draft Interim Compliance Schedule that is supplied with this draft permit modification for public review and comment. The permitting of these major components will be processed as Agency Initiated Modifications, to support the continued design and construction of the EMF.

## Reviewing the Proposed Changes

Ecology invites you to review and comment on this proposed WTP Permit modification. The comment period runs from May 22, 2017, through July 7, 2017. See the box on the right side of page 1 for information on how to submit comments.

During the public comment period, documents will be available for review beginning May 22, 2017, on Ecology's website and at the locations listed on page 4.

## Hanford's Information Repositories and Document Review Locations

### Richland

Ecology Nuclear Waste Resource Center
3100 Port of Benton Blvd.
Richland, WA 99354
Contact: Teresa Booth
509-372-7950

Department of Energy Administrative Record
2440 Stevens Drive, Room 1101
Richland, WA 99354
Contact: Heather Childers
509-376-2530

Department of Energy Reading Room
2770 Crimson Way, Room 101L
Richland, WA 99354
Contact: Janice Parthree
509-375-3308

### Portland

Portland State University
Branford Price Millar Library
1875 SW Park Avenue
Portland, OR 97207
Contact: Claudia Weston
503-725-4542

### Seattle

University of WA Suzzallo Library
P.O. Box 352900
Seattle, WA 98195
Contact: Hilary Reinert
206-543-5597

### Spokane

Gonzaga University Foley Center
502 E Boone Avenue
Spokane, WA 99258
Contact: John Spencer
509-313-6110

### Terms To Know

***Resource Conservation & Recovery Act (RCRA):*** Law authorizing the U.S. Environmental Protection Agency to manage hazardous waste, including the generation, transportation, treatment, storage, and disposal of radioactive hazardous and other solid waste and waste in underground tanks.

***Dangerous Waste Permit:*** A State-issued permit allowing facilities to store, treat, and/or dispose of dangerous waste.

***Underground storage tank:*** A tank that is entirely below the surface of and covered by the ground.

At Hanford, two types of underground storage tanks have capacities ranging from 50,000 to 1,000,000 gallons. The single-shell tanks have one steel liner encased in reinforced concrete, and do not comply with State environmental laws. The double-shell tanks have two steel liners in reinforced concrete and contain potential leaks, in compliance with the law.

***Vitrification:*** Immobilizing waste by mixing it with glass formers and melting the mixture into a glass form that cools into a solid.

***Waste Treatment and Immobilization Plant:*** Facility to thermally treat and vitrify tank waste at Hanford.

***High-level waste:*** Results from reprocessing spent nuclear fuel. This includes liquid produced during reprocessing and solids derived from this liquid waste that contain fission products in sufficient concentrations and other highly radioactive material that, by law, requires permanent isolation.

***Low-activity waste:*** Remains after as much radioactivity as is technically and economically practical has been separated from high-level waste. When vitrified, it may be disposed of as low-level radioactive waste in a near surface facility at Hanford.

***Direct Feed Low-Activity Waste (DFLAW):*** Facility configuration in which low-activity waste is sent from the Hanford Tank Farms through the Low-Activity Waste Pretreatment Facility directly to Low-Activity Waste Vitrification Facility for treatment.

DEPARTMENT OF
ECOLOGY
State of Washington

3100 Port of Benton Blvd.
Richland, WA 99354

PRESORTED
FIRST CLASS MAIL
US POSTAGE PAID
WA STATE DEPT
OF ENTERPRISE SRVCS
98501

**Public Comment Period**
**Hanford's Waste Treatment Plant**
**Permit Modification**
May 22, 2017 -
July 7, 2017

**The Washington State Department of Ecology Announces a 45-Day Public Comment Period for Modifications to the Hanford Facility Resource Conservation and Recovery Act Permit, Dangerous Waste Portion, Revision 8C, for the Treatment, Storage, and Disposal of Dangerous Waste, Part III, Operating Unit 10, Waste Treatment and Immobilization Plant (WTP) Permit**

**Comment Period: May 22, 2017 through July 7, 2017**

The Washington State Department of Ecology (Ecology) is proposing a change to the WTP Permit. The Permitees are:
U.S. Department of Energy Office of River Protection
P.O. Box 450
Richland, Washington 99352
Bechtel National Inc.
2435 Stevens Center Place
Richland, Washington 99354

**Why it Matters**

The Waste Treatment and Immobilization Plant (WTP) is being designed and built to treat the 56 million gallons of dangerous radioactive and chemical waste from the 177 underground storage tanks at the Hanford Site north of Richland, Washington. Safely treating tank waste is an important goal to help protect people and the environment. The proposed permit changes affect the WTP.

The proposed modification provides the technical information and engineering drawings to support the design and construction of the secondary containment for the Effluent Management Facility (EMF) within the WTP.

In order to initiate tank waste treatment by 2023, ORP developed a plan to begin feeding pre-treated low-activity tank waste directly to the WTP Low-Activity Waste (LAW) Vitrification Facility. The plan is called the Direct Feed Low-Activity Waste (DFLAW) configuration.

The DFLAW configuration supports treatment by allowing LAW Vitrification Facility and the Analytical Laboratory (Lab) to begin treating waste prior to the startup of the Pretreatment (PT) and High-Level Waste (HLW) Vitrification Facilities. Although most of the WTP facilities required for the DFLAW configuration are complete, or near complete, the plan requires the construction of two new facilities which include the EMF and the Low-Activity Pretreatment System (LAWPS).

**Design Package for Effluent Management Facility Secondary Containment**

The Effluent Management Facility (EMF) permit modification addresses the design and construction of the following buildings at EMF: Process (Building 25), Low Point Drain (Building 25A) and Utility (Building 26).

This is a brief summary of the changes proposed for the WTP Permit. To review the proposed modification in detail beginning May 22, 2017, visit the Washington State Department of Nuclear Waste Program Public Comment Periods webpage.

You can also review the proposal modification on May 22, 2017 at one of the Hanford Public Information Repositories.

**Richland**
Ecology Nuclear Waste Resource Center
3100 Port of Benton Blvd.
Richland, WA 99354
Contact: Teresa Booth
509-372-7950
Department of Energy Administrative Record
2440 Stevens Drive, Room 1101
Richland, WA 99354
Contact: Heather Childers
509-376-2530
Department of Energy Reading Room
2770 Crimson Way, Room 101L
Richland, WA 99354
Contact: Janice Parthree
50-9375-3308

**Portland**
Portland State University
Branford Price Millar Library
1875 SW Park Avenue
Portland, OR 97207
Contact: Claudia Weston
503-725-4542

**Seattle**
University of WA
Suzzallo Library
P.O. Box 352900
Seattle, WA 98195
Contact: Hilary Reinert
206-543-5597

**Spokane**
Gonzaga University Foley Center
502 E Boone Avenue
Spokane, WA 99258
Contact: John Spencer
509-313-6110

Your views and concerns are important to the Washington State Department of Ecology. For more information on the public comment period please contact Joanna Morse at Hanford@ecy.wa.gov

**#3081535 05/21/2017**

This is a message from the Washington Department of Ecology

**The Washington State Department of Ecology Announces a 45-Day Public Comment Period for Modifications to the Hanford Facility Resource Conservation and Recovery Act Permit, Dangerous Waste Portion, Revision 8C, for the Treatment, Storage, and Disposal of Dangerous Waste, Part III, Operating Unit 10, Waste Treatment and Immobilization Plant (WTP) Permit**

**Comment Period: May 22, 2017 through July 7, 2017**

**Why It Matters**

The WTP is being designed and built to treat the 56 million gallons of dangerous radioactive and chemical waste from the 177 underground storage tanks at the Hanford Site north of Richland, Washington. Treating the waste will reduce the risk to people and the environment. The proposed modifications affect facilities that are part of the WTP.

This class 3 permit modification provides the technical information and engineering drawings to support the design and construction of the secondary containment for the Effluent Management Facility (EMF) within the WTP. The modification includes information for the following buildings at EMF: Process (Building 25), Low Point Drain (Building 25A) and Utility (Building 26). This proposal is one of many changes to the original WTP Permit.

The EMF is being built to support the Direct Feed Low Activity Waste (DFLAW) configuration. The EMF allows for the processing of waste at the Low Activity Waste (LAW) Vitrification Facility and Analytical Laboratory to start prior to the operation of the High-Level Waste (HLW) and Pretreatment (PT) Facilities. This DFLAW configuration feeds waste directly from the Low-Activity Waste Pretreatment System (LAWPS) to the LAW Facility. When the PT and HLW Vitrification facilities become operational, WTP will change to the baseline configuration. When the WTP is operating in the baseline configuration, it is anticipated that the EMF will not be operated. However, it will remain in standby until the treatment of the waste has been completed. DFLAW operations are designed to operate for ten years. This allows time to resolve technical issues with the HLW and PT processes and finish the construction of those facilities.

This proposed permit modification incorporates technical details in the chapters within the WTP Permit. The details include an Interim Compliance Schedule for EMF that is specific to the design, construction and eventual operations of the facility. Additionally, Ecology has also drafted associated permit conditions and included them with this draft modification. Finally, the appendices and figures have been revised, supporting information has been incorporated and format changes have been addressed, in this modification.

This is a brief summary of the changes proposed for the WTP Permit.

To review the proposed modification in detail beginning May 22, 2017, visit the Washington State Department of Ecology Nuclear Waste Program Public Comment Periods webpage. You can also review the proposed modification on May 22, 2017 at one of the Hanford Public Information Repositories:

RichlandEcology Nuclear Waste Resource Center 3100 Port of Benton Blvd. Richland, WA 99354 Contact: Teresa Booth 509-372-7950 Dept. of Energy Administrative Record 2440 Stevens Drive, Room 1101 Richland, WA 99354 Contact: Heather Childers 509-376-2530 Department of Energy Reading Room 2770 Crimson Way, Room 101L Richland, WA 99354 Contact: Janice Parthree 509-375-3308 Portland Portland State University Branford Price Millar Library 1875 SW Park Avenue Portland, OR 97207 Contact: Claudia Weston 503-725-4542 Seattle University of WA Suzzallo Library P.O. Box 352900 Seattle, WA 98195 Contact: Hilary Reinert 206-543-5597 Spokane Gonzaga University Foley Center 502 E Boone Avenue Spokane, WA 99258 Contact: John Spencer 509-313-6110 Your views and concerns are important to the Washington State Department of Ecology. For more information on the public comment period, please contact Joanna Morse at Hanford@ecy.wa.gov.

---

Visit us on the web or social media.

Subscribe or Unsubscribe

# DANGEROUS WASTE PORTION OF THE RESOURCE CONSERVATION AND RECOVERY ACT PERMIT FOR THE TREATMENT, STORAGE, AND DISPOSAL OF DANGEROUS WASTE

## SIGNATURE PAGE

The enclosed portions of the Hanford Facility Resource Conservation and Recovery Act Permit, Dangerous Waste Portion, Revision 8c for the Treatment, Storage, and Disposal of Dangerous Waste were modified on September 5, 2017. These portions are the legal and current version of the permit. It will remain in effect unless modified, revoked and reissued under Washington Administrative Code (WAC) 173-303-830(3), terminated under WAC 173-303-830(5), or continued in accordance with WAC 173-303-806(7). All other portions of the permit remain unchanged.

ISSUED BY:
**WASHINGTON STATE DEPARTMENT OF ECOLOGY**

_____ Date: 9/5/17

Suzanne Dahl, Dangerous Waste Permit Manager
Nuclear Waste Program, Department of Ecology

This page intentionally left blank.

# WASTE TREATMENT AND IMMOBILIZATION PLANT

## CHANGE CONTROL LOG

Change Control Logs ensure that changes to this unit are performed in a methodical, controlled, coordinated, and transparent manner. Each unit addendum will have a "**Last Modification Date**" which represents the last date the portion of the unit has been modified. The "**Modification Number**" represents Ecology's method for tracking the different versions of the permit. This log will serve as an up to date record of modifications and version history of the unit.

Last modification to Waste Treatment and Immobilization Plant **September 5, 2017**

| Chapters | Last Modification Date | Modification Number |
|---|---|---|
| Unit-Specific Conditions | 09/05/2017 | 8C.2017.6F |
| 1.0 Part A Form | 09/05/2017 | 8C.2017.6F |
| 2.0 Topographic Map | 09/05/2017 | 8C.2017.6F |
| 3.0 Waste Analysis Plan | 06/2011 | |
| 3A Waste Treatment Plant Waste Analysis Plan | 09/05/2017 | 8C.2017.6F |
| 3B Quality Assurance Project Plan for Waste Analysis Plan | 09/05/2017 | 8C.2017.6F |
| 4.0 Process Information | 09/05/2017 | 8C.2017.6F |
| 4A Figures and Drawings | 09/05/2017 | 8C.2017.6F |
| 4C Compliance with Uniform Building Code Seismic Design Requirements | 11/17/2008 | |
| 4D Pretreatment Facility | 12/15/2016 | 8C.2016.Q3 |
| 4E Low-Activity Waste Vitrification Facility | 09/05/2017 | 8C.2017.6F |
| 4F High-Level Waste Vitrification Facility | 12/15/2016 | 8C.2016.Q3 |
| 4G Direct-Feed Low-Activity Waste (Effluent Management Facility) | 09/05/2017 | 8C.2017.6F |
| 4H Analytical Laboratory | 09/05/2017 | 8C.2017.6F |
| 4I Balance of Facilities | 09/05/2017 | 8C.2017.6F |
| 5.0 Reserved | | |
| 6.0 Procedures to Prevent Hazards | 09/05/2017 | 8C.2017.6F |
| 6A Inspection Plan | 09/05/2017 | 8C.2017.6F |
| 7.0 Contingency Plan | 09/05/2017 | 8C.2017.6F |
| 8.0 Personnel Training | 09/05/2017 | 8C.2017.6F |
| 9.0 Reserved | | |
| 10.0 Reserved | | |
| 11.0 Closure Plan | 09/05/2017 | 8C.2017.6F |
| 11A Sampling and Analysis Plan for Closure of WTP Facility | 05/23/2016 | 8C.2016.Q1 |
| 12.0 Reporting and Recordkeeping | 08/2011 | |

## WASTE TREATMENT AND IMMOBILIZATION PLANT

## CHANGE CONTROL LOG

| Appendices | Last Modification Date | Modification Number |
|---|---|---|
| Appendices 1: WTP Interim Compliance Schedule | 09/30/2015 | 8C.2015.Q3 |
| Appendices 1.4: WTP Effluent Management Facility Interim Compliance Schedule | 09/05/2017 | 8C.2017.6F |
| Appendices 2: Critical Systems for the WTP | 09/05/2017 | 8C.2017.6F |
| Appendices 3: Reserved | | |
| Appendices 4: Reserved | | |
| Appendices 5: Reserved | | |
| Appendices 6: Risk Assessment | 01/28/2016 | 8C.2016.1F |
| Appendices 7: WTP Documents Applicable to all Regulated Areas | 09/05/2017 | 8C.2017.6F |
| Appendices 8: Pretreatment Facility | 07/06/2017 | 8C.2017.2F |
| Appendices 9: Low-Activity Waste Building | 07/06/2017 | 8C.2017.2F |
| Appendices 10: High-Level Waste Building | 09/30/2015 | 8C.2015.Q3 |
| Appendices 11: Laboratory Building | 07/06/2017 | 8C.2017.2F |
| Appendices 12: Balance of Facilities | 07/06/2017 | 8C.2017.2F |
| Appendices 13: Effluent Management Facility | 09/05/2017 | 8C.2017.6F |

# WASTE TREATMENT AND IMMOBILIZATION PLANT
# PART III, OPERATING UNIT GROUP 10 – SPECIFIC CONDITIONS

## CHANGE CONTROL LOG

Change Control Logs ensure that changes to this unit are performed in a methodical, controlled, coordinated, and transparent manner. Each unit addendum will have its own change control log with a modification history table. The "**Modification Number**" represents Ecology's method for tracking the different versions of the permit. This log will serve as an up to date record of modifications and version history of the unit.

Modification History Table

| Modification Date | Modification Number |
|---|---|
| 09/05/2017 | 8C.2017.6F |
| 07/06/2017 | 8C.2017.2F |
| 03/01/2017 | 8C.2016.Q4 |
| 12/15/2016 | 8C.2016.Q3 |
| 12/1/2016 | 8C.2016.7F |

This page intentionally left blank.

# PART III, OPERATING UNIT GROUP 10 – SPECIFIC CONDITIONS
# WASTE TREATMENT AND IMMOBILIZATION PLANT

This page intentionally left blank.

# PART III, OPERATING UNIT GROUP 10 – SPECIFIC CONDITIONS WASTE TREATMENT AND IMMOBILIZATION PLANT

The Waste Treatment and Immobilization Plant (WTP) is the operating treatment and storage unit designed to treat the mixed (radioactive and dangerous) waste currently stored in underground tanks at the Hanford Site. Once the mixed waste is received at the WTP, it will be separated into High-level and Low-activity waste streams in the Pretreatment Building. The waste streams are then transferred to either the High-level Waste Building or the Low-Activity Waste Building, mixed with glass forming additives and heated to 950-1250°C in melters, and then poured into containers. As the containerized waste cools, it is immobilized in the glass matrix. Once the waste is immobilized, the container is finished (i.e. provided with a lid and decontaminated), and then transported from the WTP for disposal.

## III.10.A COMPLIANCE WITH APPROVED PERMIT

The Permittees shall comply with all requirements set forth in the Hanford Facility RCRA Dangerous Waste Permit including all approved modification. All chapters, subsection, files, tables, addendums, and appendices included in the following unit-specific Conditions are enforceable in their entirety. In the event that a Unit-Specific Condition conflicts with Permit Conditions in Parts I or II of this Permit, the Unit-Specific Conditions shall prevail.

Where information regarding treatment, management, and disposal of the radioactive source, byproduct material, special nuclear material (as defined by the Atomic Energy Act of 1954, as amended) and/or the radionuclide component of mixed waste has been incorporated into this permit, it is not incorporated for the purpose of regulating the radiation hazards of such components under the authority of this permit and chapter 70.105 RCW. In the event of any conflict between Permit Condition III.10.A and any statement relating to the regulation of source, special nuclear, and byproduct material contained in portions of the permit application that are incorporated into this permit, Permit Condition III.10.A will prevail.

OPERATING UNIT GROUP 10

| | | |
|---|---|---|
| Chapter 1 | Part A Form, Revision 3 | |
| Chapter 2 | Topographic Map | |
| Chapter 3 | Waste Analysis Plan | |
| | Appendix 3A | Waste Treatment Plant Waste Analysis Plan |
| | Appendix 3B | Quality Assurance Project Plan for Waste Analysis Plan |
| Chapter 4 | Process Information | |
| | Chapter 4A | Engineering Figures |
| | Chapter 4C | §RPP-WTP Compliance with Uniform Building Code Seismic Design |
| | Chapter 4D | Pretreatment Facility (PTF) |
| | Chapter 4E | Low-Activity Waste (LAW) Vitrification Facility |
| | Chapter 4F | High-Level Waste (HLW) Vitrification Facility |
| | Chapter 4G | Direct-Feed Low-Activity Waste (Effluent Management Facility) |
| | Chapter 4H | Analytical Laboratory (LAB) |
| | Chapter 4I | Balance of Facilities (BOF) |
| Chapter 5 | Groundwater Monitoring (RESERVED) | |

| | |
|---|---|
| Chapter 6 | Procedures to Prevent Hazards |
| | Chapter 6A Inspection Plan |
| Chapter 7 | Contingency Plan |
| Chapter 8 | Personnel Training |
| Chapter 11 | Closure |
| | Chapter 11.A Sampling and Analysis Plan for Closure of WTP Facility |
| Chapter 12 | Reporting an Recordkeeping |
| Appendix 1.0 | WTP Interim Compliance Schedule |
| Appendix 1.4 | WTP Effluent Management Facility Interim Compliance Schedule |
| Appendix 2.0 | Critical Systems |
| Appendix 3.0 | RESERVED |
| Appendix 4.0 | RESERVED |
| Appendix 5.0 | RESERVED |
| Appendix 6.0 | Risk Assessment |
| Appendix 6.0, §6.1 | Environmental Risk Assessment Work Plan for the Hanford Tank Waste Treatment and Immobilization Plant 07/30/2003 |
| Appendix 6.0, §6.1.1 | Final Work Plan for Screening Level Risk Assessment for the RPP-WTP 04/28/2000 |
| Appendix 6.0, §6.1.2 | Ecology/EPA Technical Comments on Hanford River Protection Privatization Project Review of BNFL Final Work Plan for Screening Level Risk Assessment for RPP-WTP |
| Appendix 6.0, §6.2 | Final Risk Assessment Work Plan |
| Appendix 6.0, §6.2.1 | Supplement 1 – Constituents of Potential concerns for the WTP Air and Dangerous Waste Permits |
| Appendix 6.0, §6.2.2 | Supplement 2 – Integreated Emissions Baseline Report for the Hanford Tank Waste Treatment and Immobilization Plant |
| Appendix 6.0, §6.2.3 | Supplement 3 – Estimated Organic Emissions from Process Cells |
| Appendix 6.0, §6.2.4 | Supplement 4 – Chemical Parameters and Toxicological Inputs for the Environmental Risk Assessment for the Hanford Tank Waste Treatment and Immobilization Plant |
| Appendix 6.0, §6.2.5 | Supplement 5 – Hanford Tank Waste Treatment and Immobilization Plant Risk Assessment Air Quality Modeling Protocol |
| Appendix 6.0, §6.3 | Pre-Demonstration Test Risk Assessment Report (RESERVED) |
| Appendix 6.0, §6.4 | Final Risk Assessment (RESERVED) |
| Appendix 7.0 | WTP Documents Applicable to All Regulated Areas |
| Appendix 7.0, §7.1 | Process Flow Diagrams |
| Appendix 7.0, §7.2 | Piping and Instrumentation Diagrams & Related Documents |

| | |
|---|---|
| Appendix 7.0, §7.3 | System Description Documentation (Administrative Record) |
| Appendix 7.0, §7.4 | General Arrangement Drawings (RESERVED) |
| Appendix 7.0, §7.5 | Civil, Structural, and Architectural Criteria and Typical Design Details |
| Appendix 7.0, §7.6 | Mechanical Drawings (RESERVED) |
| Appendix 7.0, §7.7 | Specifications |
| Appendix 7.0, §7.8 | Engineering Calculations (RESERVED) |
| Appendix 7.0, §7.9 | Material Selection Documentation |
| Appendix 7.0, §7.10 | Critical Systems Equipment/Instrument List (RESERVED) |
| Appendix 7.0, §7.11 | Independent, Qualified, Registered Professional Engineer (IQRPE) Reports |
| Appendix 7.0, §7.12 | Installation Plans |
| Appendix 7.0, §7.13 | Instrument Control Logic and Narrative Description |
| Appendix 7.0, §7.14 | Descriptions of Instrument Installation and Testing Procedures (RESERVED) |
| Appendix 7.0, §7.15 | Operating Documents |
| Appendix 8.0 | Pretreatment Building |
| Appendix 8.0, §8.1 | Process Flow Diagrams |
| Appendix 8.0, §8.2 | Piping and Instrumentation Diagrams |
| Appendix 8.0, §8.3 | System Description Documentation (Administrative Record) |
| Appendix 8.0, §8.4 | General Arrangement Drawings |
| Appendix 8.0, §8.5 | Civil, Structural, and Architectural Criteria and Typical Design Details |
| Appendix 8.0, §8.6 | Mechanical Drawings |
| Appendix 8.0, §8.7 | Specifications |
| Appendix 8.0, §8.8 | Engineering Calculations |
| Appendix 8.0, §8.9 | Material Selection and Corrosion Evaluation Documentation |
| Appendix 8.0, §8.10 | Critical Systems Equipment/Instrument List |
| Appendix 8.0, §8.11 | Independent, Qualified, Registered Professional Engineer (IQRPE) Reports |
| Appendix 8.0, §8.12 | Installation Plans (RESERVED) |
| Appendix 8.0, §8.13 | Instrument Control Logic and Narrative Description |
| Appendix 8.0, §8.14 | Descriptions of Instrument Installation and Testing Procedures (RESERVED) |
| Appendix 8.0, §8.15 | Demonstration Test Plan (RESERVED) |
| Appendix 8.0, §8.16 | Demonstration Test Report (RESERVED) |
| Appendix 8.0, §8.17 | Treatment Effectiveness Report (RESERVED) |
| Appendix 8.0, §8.18 | Operating Documents |
| Appendix 9.0 | Low-Activity Waste (LAW) Building |
| Appendix 9.0, §9.1 | Process Flow Diagrams |
| Appendix 9.0, §9.2 | Piping and Instrumentation Diagrams |

| | |
|---|---|
| Appendix 9.0, §9.3 | System Description Documentation (Administrative Record) |
| Appendix 9.0, §9.4 | General Arrangement Drawings |
| Appendix 9.0, §9.5 | Civil, Structural, and Architectural Criteria and Typical Design Details |
| Appendix 9.0, §9.6 | Mechanical Drawings |
| Appendix 9.0, §9.7 | Specifications |
| Appendix 9.0, §9.8 | Engineering Calculations |
| Appendix 9.0, §9.9 | Material Selection and Corrosion Evaluation Documentation |
| Appendix 9.0, §9.10 | Critical Systems Equipment /Instrument List |
| Appendix 9.0, §9.11 | Independent, Qualified, Registered Professional Engineer (IQRPE) Reports |
| Appendix 9.0, §9.12 | Installation Plans (RESERVED) |
| Appendix 9.0, §9.13 | Instrument Control Logic, and Narrative Description |
| Appendix 9.0, §9.14 | Descriptions of Instrument Installation and Testing Procedures (RESERVED) |
| Appendix 9.0, §9.15 | Demonstration Test Plan (RESERVED) |
| Appendix 9.0, §9.16 | Demonstration Test Report (RESERVED) |
| Appendix 9.0, §9.17 | Treatment Effectiveness Report (RESERVED) |
| Appendix 9.0, §9.18 | Operating Documents |
| Appendix 10.0 | High Level Waste (HLW) Building |
| Appendix 10.0, §10.1 | Process Flow Diagrams |
| Appendix 10.0, §10.2 | Piping and Instrumentation Diagrams |
| Appendix 10.0, §10.3 | System Description Documentation (Administrative Record) |
| Appendix 10.0, §10.4 | General Arrangement Drawings |
| Appendix 10.0, §10.5 | Civil, Structural, and Architectural Criteria and Typical Design Details |
| Appendix 10.0, §10.6 | Mechanical Drawings |
| Appendix 10.0, §10.7 | Specifications |
| Appendix 10.0, §10.8 | Engineering Calculations |
| Appendix 10.0, §10.9 | Material Selection and Corrosion Evaluation Documentation |
| Appendix 10.0, §10.10 | Critical Systems Equipment/Instrument List |
| Appendix 10.0, §10.11 | Independent, Qualified, Registered Professional Engineer (IQRPE) Reports |
| Appendix 10.0, §10.12 | Installation Plans (RESERVED) |
| Appendix 10.0, §10.13 | Instrument Control Logic and Narrative Description |
| Appendix 10.0, §10.14 | Descriptions of Instrument Installation and Testing Procedures (RESERVED) |
| Appendix 10.0, §10.15 | Demonstration Test Plan (RESERVED) |
| Appendix 10.0, §10.16 | Demonstration Test Report (RESERVED) |
| Appendix 10.0, §10.17 | Treatment Effectiveness Report (RESERVED) |
| Appendix 10.0, §10.18 | Operating Documents |

| | |
|---|---|
| Appendix 11.0 | Laboratory Building |
| Appendix 11.0, §11.1 | Process Flow Diagrams |
| Appendix 11.0, §11.2 | Piping and Instrumentation Diagrams |
| Appendix 11.0, §11.3 | System Description Documentation (RESERVED) |
| Appendix 11.0, §11.4 | General Arrangement Drawings |
| Appendix 11.0, §11.5 | Civil, Structural, and Architectural Criteria and Typical Design Details |
| Appendix 11.0, §11.6 | Mechanical Drawings |
| Appendix 11.0, §11.7 | Specifications (RESERVED) |
| Appendix 11.0, §11.8 | Engineering Calculations |
| Appendix 11.0, §11.9 | Material Selection and Corrosion Evaluation Documentation |
| Appendix 11.0, §11.10 | Critical Systems Equipment/Instrument List |
| Appendix 11.0, §11.11 | Independent, Qualified, Registered Professional Engineer (IQRPE) Reports |
| Appendix 11.0, §11.12 | Installation Plans (RESERVED) |
| Appendix 11.0, §11.13 | Instrument Control Logic and Narrative Description |
| Appendix 11.0, §11.14 | Descriptions of Instrument Installation and Testing Procedures (RESERVED) |
| Appendix 11.0, §11.15 | Operating Documents (RESERVED) |
| Appendix 11.0, §11.16 | Demonstration Test Report (RESERVED) |
| Appendix 11.0, §11.17 | Treatment Effectiveness Report (RESERVED) |
| Appendix 11.0, §11.18 | Operating Documents |
| Appendix 12.0 | Balance of Facilities |
| Appendix 12.0, §12.1 | Process Flow Diagrams (RESERVED) |
| Appendix 12.0, §12.2 | Piping and Instrumentation Diagrams |
| Appendix 12.0, §12.3 | System Description Documentation (RESERVED) |
| Appendix 12.0, §12.4 | General Arrangement Drawings |
| Appendix 12.0, §12.5 | Civil, Structural, and Architectural Criteria and Typical Design Details |
| Appendix 12.0, §12.6 | Mechanical Drawings (RESERVED) |
| Appendix 12.0, §12.7 | Specifications (RESERVED) |
| Appendix 12.0, §12.8 | Engineering Calculations (RESERVED) |
| Appendix 12.0, §12.9 | Material Selection and Corrosion Evaluation Documentation (RESERVED) |
| Appendix 12.0, §12.10 | Critical Systems Equipment/Instrument List (RESERVED) |
| Appendix 12.0, §12.11 | Independent, Qualified, Registered Professional Engineer (IQRPE) Reports (RESERVED) |
| Appendix 12.0, §12.12 | Installation Plans (RESERVED) |
| Appendix 12.0, §12.13 | Instrument Control Logic and Narrative Description (RESERVED) |
| Appendix 12.0, §12.14 | Descriptions of Instrument Installation and Testing Procedures (RESERVED) |

Appendix 12.0, §12.15 Demonstration Test Plan (RESERVED)

Appendix 12.0, §12.16 Demonstration Test Report (RESERVED)

Appendix 12.0, §12.17 Treatment Effectiveness Report (RESERVED)

Appendix 12.0, §12.18 Operating Documents

Appendix 13.0, §13.0 Effluent Management Facility

Appendix 13.0, §13.1 Process Flow Diagrams

Appendix 13.0, §13.2 Piping & Instrumentation Diagrams

Appendix 13.0, §13.3 System Description Documentation (RESERVED)

Appendix 13.0, §13.4 General Arrangement Drawings

Appendix 13.0, §13.5 Civil, Structural, and Architectural Criteria and Typical Design Details (RESERVED)

Appendix 13.0, §13.6 Mechanical Drawings (RESERVED)

Appendix 13.0, §13.7 Specifications (RESERVED)

Appendix 13.0, §13.8 Engineering Calculations (RESERVED)

Appendix 13.0, §13.9 Material Selection and Corrosion Evaluation Documentation (RESERVED)

Appendix 13.0, §13.10 Critical Systems Equipment/Instrument List (RESERVED)

Appendix 13.0, §13.11 Independent, Qualified, Registered Professional Engineer (IQRPE) Reports

Appendix 13.0, §13.12 Installation Plans (RESERVED)

Appendix 13.0, §13.13 Instrumentation Control Logic and Narrative Description

Appendix 13.0, §13.14 Description of Instrument Installation and Testing Procedures (RESERVED)

Appendix 13.0, §13.15 Demonstration Test Plan (RESERVED)

Appendix 13.0, §13.16 Demonstration Test Report (RESERVED)

Appendix 13.0, §13.17 Treatment Effectiveness Report (RESERVED)

Appendix 13.0, §13.18 Operating Documents

## Facility-Specific Definitions

The following definitions are specific to the WTP Unit:

**Ash:** means a measure of the contribution of particulate matter from the melter feeds to the melter off-gas, as determined by representative sampling and analysis of the melter feed using ASTM MethodD-482, or an equivalent method.

**Batch:** refers to waste staged in one DST designated as mixed waste for transfer to the WTP Unit for treatment.

**Continuous monitoring system:** means using a device which continuously samples the regulated parameter specified on Permit Tables III.10.H.F, III.10.I.F, III.10.J.F, and III.10.K.F, with the exception of pressure, without interruption, evaluates the detector response at least once every fifteen (15) seconds and computes and records the average value at least every sixty (60) seconds, except during allowable periods of calibration and except as defined otherwise by the CEMS Performance Specifications in 4B and 8A in Appendix B, 40 CFR Part 60. For the parameter pressure, the term “continuous monitoring system” means using a device that continuously samples the pressure without interruption and evaluates

the detector response without averaging at least once each second and records the value at least every sixty (60) seconds. In addition, if the AWFCO is engaged due to a pressure exceedance, the pressure value must be recorded.

**Cascade event:** means when additional waste feed cut-off parameter set points deviate outside the limits specified in Permit Tables III.10.H.F, III.10.I.F, III.10.J.F, and III.10.K.F after waste feed is cut-off, but while waste or waste residues are being managed in HLW and LAW.

**Critical System:** as applied to determining whether a Permit Modification is required, means those specific portions of a treatment, storage, and disposal (TSD) unit's structure, or equipment, whose failure could lead to the release of dangerous waste into the environment, and/or systems which include processes which treat, transfer, store, or dispose of regulated wastes. A list identifying the critical systems for the WTP is included in Appendix 2.

**Dangerous and/or mixed waste management unit:** means dangerous and/or mixed waste management units, areas, systems, and sub-systems as defined in Permit Tables III.10.D.A, III.10.E.A through D, III.10.F.A, III.10.G.A, III.10.H.A, III.10.I.A, III.10.J.A, III.10.K.A, III.10.M.A, and III.10.E.R through III.10.E.T.

**Dioxin/furan" and "dioxins and furans:** means tetra-, penta-, hexa-, hepta-, and octa-chlorinated dibenzo dioxins and furans.

**EMF Vitrification System:** is defined as specified on Permit Tables III.10.M.A and III.10.E.R through III.10.E.T.

**HLW Vitrification System:** is defined as specified on Permit Tables III.10.J.A and B, and III.10.K.A and B.

**Hourly rolling average or HRA:** will mean the arithmetic mean of the sixty (60) most recent one-minute readings recorded by the continuous monitoring system.

**LAW Vitrification System:** is defined as specified on Permit Tables III.10.H.A and B, and III.10.I.A and B.

**Mode of operation:** means operation of the LAW Vitrification System or the HLW Vitrification System within set limits for each operating parameter specified in Permit Tables III.10.H.D and F (for LAW) and Permit Tables III.10.I.D and F (for HLW).

**One-minute average:** means the average of detector responses calculated at least every sixty (60) seconds from responses obtained at least every fifteen (15) seconds.

**Permittees:** means the United States Department of Energy (owner/operator) and Bechtel National, Inc. (Co-operator).

**Pretreatment Plant Miscellaneous Unit Systems:** is defined as specified on Permit Tables III.10.G.A and B.

**Primary sump:** means any pit or reservoir that meets the WAC 173-303-040 definition of "tank," and those troughs/trenches connected to it, that serve to collect dangerous/hazardous waste, deliberately introduced (e.g., from decontamination or treatment activities), for transport to TSD facilities.

**Rolling average:** means the average of all one-minute averages over the averaging period.

**Secondary sump:** means any pit or reservoir that meets the WAC 173-303-040 definition of "tank," and those troughs/trenches connected to it, that serve to collect dangerous/hazardous waste, not deliberately introduced (e.g., from spills, leaks, or overflows), for transport to TSD facilities.

**Secondary mixed waste stream:** means treatment residues and materials derived from the treatment of mixed waste which continue to designate as a dangerous, extremely hazardous, or acutely hazardous waste and contains a radioactive component.

**Standard operating procedure or SOP:** will mean a written description of the procedures by which a process, equipment, etc. will be operated. An SOP may be written by the manufacturer and/or the Permittees.

**Successful completion of the demonstration test:** will mean operations including a minimum of three test runs without significant interruptions (i.e., once initiated, each test run must be continuous, and the samples have been preserved and maintained intact, and one in which sampling of exhaust gas was representative of the LAW Vitrification System or HLW Vitrification System Operations, whichever is applicable, and adequate to achieve evaluation of PODCs destruction and removal efficiency (DRE) to 99.99%).

**TEQ or "toxic equivalents":** refer to the sum of the weighted potencies of 7 polychlorinated dibenso-p –dioxins (PCDDs), 10 polychlorinated dibensofurans (PCDFs), and 12 dioxin-like (coplanar) polychlorinated biphenyl (PCBs), relative to a reference compound, 2, 3, 7, 8 – tetrachlorodibenzo-p-dioxin (2, 3, 7, 8 –TCDD).

**Pre-process:** means prior to introduction into a dangerous or mixed waste management unit at the WTP Unit.

**In-process:** means duration of a waste in a dangerous or mixed waste management unit at the WTP Unit.

**Post-process:** means prior to the introduction into a subsequent dangerous or mixed waste management unit at the WTP Unit or prior to shipment from the WTP Unit.

**Vendor information:** means documentation prepared by a vendor (e.g., catalog cut sheets) for plant items that are routinely manufactured and stocked by vendors (i.e., items that are considered "off the shelf") and are not being procured in accordance with Permittees' engineering drawings and specifications. Documentation such as catalog cut sheets will be annotated to specify selected items which meet Permittee's procurement requirements equipment specification. Documentation associated with "one of a kind", custom items, and commercial grade items (e.g., bulk pipe, valves) that will be procured in accordance with the Permittees engineering drawings and specifications is not considered vendor information. Changes to the drawings and specifications may require a permit modification.

**Vitrification System Shutdown:** means emergency and planned shutdowns of the vitrification system as defined in the operating procedure(s).

**Vitrification System Startup:** means startup of the vitrification system as defined in operating procedure(s).

## FACILITY-SPECIFIC ACRONYMS

The following acronyms are specific to the WTP Unit:

| | |
|---|---|
| AWFCO | Automatic Waste Feed Cut-off |
| CDR | Construction Deficiency Report |
| CEMS | Continuous Emissions Monitoring System |
| CMS | Continuous Monitoring System |
| CNP | Cesium Nitric Acid Recovery Process System |
| CRP | Cesium Resin Addition Process System |
| CPE | Cathodic Protection Electrical System |

| | |
|---|---|
| CXP | Cesium Ion Exchange Process System |
| DEP | Direct Feed LAW EMF Process System |
| DFETP | Dioxin and Furan Emission Test Plan |
| DRE | Destruction and Removal Efficiency |
| Dscf | Dry standard cubic feet |
| EMF | Effluent Management Facility |
| ERP | Emergency Response Plan |
| FEP | Waste Feed Evaporation Process System |
| FRP | Waste Feed Receipt Process System |
| HCP | HLW Concentrate Receipt Process System |
| HDH | HLW Canister Decontamination Handling System |
| HEH | HLW Canister Export Handling System |
| HEME | High Efficiency Mist Eliminator |
| HEPA | High Efficiency Particulate Air Filter |
| HFH | HLW Filter Cave Handling System |
| HFP | HLW Melter Feed Process System |
| HLP | HLW Lag Storage and Feed Blending Process System |
| HLW | High-level Waste |
| HMH | HLW Melter Handling System |
| HMP | HLW Melter Process System |
| HOP | HLW Vit Primary Offgas Treatment System |
| HPH | HLW Canister Pour Handling System |
| HSH | HLW Melter Cave Support Handling System |
| IHLW | Immobilized High-Level Waste (Glass) |
| ILAW | Immobilized Low-Activity Waste (Glass) |
| IQRPE | Independent, qualified, registered, professional engineer |
| LAB | WTP Laboratory Building |
| LAW | Low Activity Waste |
| LCP | LAW Concentrate Receipt Process System |
| LEH | LAW Container Export Handling System |
| LFH | LAW Canister Finishing Handling System |
| LFP | LAW Melter Feed Process System |
| LMH | LAW Melter Handling System |
| LMP | LAW Melter Process System |
| LOP | LAW Primary Offgas Process System |

| | |
|---|---|
| LPH | LAW Container Pour Handling System |
| LSH | LAW Melter Equipment Support Handling System |
| LSM | Locally Shielded Melter |
| LVP | LAW Secondary Offgas/Vessel Vent Process System |
| NCR | Nonconformance Report |
| PFH | Pretreatment Filter Cave Handling System |
| PIH | Pretreatment In-Cell Handling System |
| PJV | Pulse Jet Ventilation System |
| PODC | Principal Organic Dangerous Constituents |
| PTF | Pretreatment Building |
| PVP | Pretreatment Vessel Vent Process System |
| PVV | Process Vessel Vent System |
| PWD | Plant Wash and Disposal System |
| RDP | Spent Resin and Dewatering Process System |
| RDTP | Revised Demonstration Test Plan |
| RLD | Radioactive Liquid Waste Disposal System |
| RPP-WTP | River Protection Project-Waste Treatment Plant |
| RWH | Radioactive Solid Waste Handling System |
| SBS | Submerged Bed Scrubber |
| TCP | Treated LAW Evaporation Process System |
| TLP | Treated LAW Evaporation System |
| TOC | Total Organic Carbon |
| TXP | Technetium Ion Exchange Process System |
| TEP | Technetium Eluant Recovery Process System |
| UFP | Ultrafiltration Process System |
| WESP | Wet Electrostatic Precipitator |
| WTP | River Protection Project – Waste Treatment and Immobilization Project (also known as the Waste Treatment Plant and Vitrification Plant) |
| 6% Mo | Six Percent Molybdenum Alloy |
| 304L | ASTM A240 Grade 304L Stainless Steel |
| 316L | ASTM A240 Grade 316L Stainless Steel |

## III.10.A COMPLIANCE WITH APPROVED PERMIT

## III.10.B STANDARD CONDITIONS AND GENERAL FACILITY CONDITIONS

In addition to the conditions in this chapter, the Permittees must comply with all the applicable portions of the Dangerous Waste Permit for the Hanford Facility. In the event that a Unit-Specific Condition for

the WTP Unit in Permit Conditions III.10.C. through III.10.M. conflicts with a general condition in Permit Conditions I and II of this permit, the Unit-Specific Condition will apply to the WTP Unit.

## III.10.C UNIT-SPECIFIC CONDITIONS FOR THE WTP UNIT

### III.10.C.1 RESERVED

### III.10.C.2 General Waste Management

**III.10.C.2.a** Treatment or storage of dangerous waste or mixed waste in any new or modified portion of the facility may commence when the Permittees have submitted to Ecology, by certified mail, or hand delivery, a letter signed by the Permittees and a Registered Professional Engineer stating that the facility has been constructed or modified in compliance with the Permit in accordance with WAC 173-303-810(14)(a); and

**III.10.C.2.a.i** The Permittee has received a Permit modification approval pursuant to Permit Conditions III.10.C.2.e. and III.10.C.2.f., or III.10.C.2.g., and

**III.10.C.2.a.ii** Ecology has inspected the modified or newly constructed facility and finds it is in compliance with the conditions of the Permit, or

**III.10.C.2.a.iii** Within fifteen days, of the date of submission of the Permittees' letter, Ecology has not notified the Permittees of intent to inspect.

**III.10.C.2.b** The Permittees are authorized to accept the dangerous and/or mixed waste specified in Operating Unit Group 10, Chapter 1 (Part A Form), and Chapter 3 (Waste Analysis Plan [WAP]).

**III.10.C.2.c** All dangerous and/or mixed waste must be managed only in areas authorized for dangerous and/or mixed waste management under the Permit conditions, except as allowed under WAC 173-303-200. The authorized dangerous and/or mixed waste management areas of the WTP Unit are specified in Conditions III.10.D through III.10.M.

**III.10.C.2.d** Dangerous and/or mixed waste may be transferred from dangerous waste management units within the WTP operating unit to an on-site dangerous waste management unit or an off-site permitted TSD Facility using the manifest/tracking system required by permit condition II.N.

**III.10.C.2.e** Permit modifications pursuant to this Permit for dangerous and/or mixed waste at the request of the Permittees must be done according to the three tiered modification system specified in WAC 173-303-830(4) and Condition I.C.3. The Permit modification request must include page changes to the Permit, attachments, and permit application supporting documentation necessary to incorporate the proposed permit modification.

**III.10.C.2.f** In addition to other requirements in WAC 173-303-830, within forty-five (45) days of a permit change (i.e., permit modification) being put into effect or approved, the Permittees will provide copies of the Permit attachments to incorporate the change (if not already reflected in the change pages submitted in the original permit modification request). This submittal does not require re-certification in accordance with WAC 173-303-810(13).

**III.10.C.2.g** Permit modifications pursuant to Operating Unit Group 10, Appendix 1.0 will be prepared and issued pursuant to WAC 173-303-830(3)(a)(ii) and WAC 173-303-840.

**III.10.C.2.h** The Permittees must complete Compliance Schedule interim requirements as specified in Operating Unit Group 10, Appendix 1.0. If an interim requirement is not completed as

specified, the Permittees will, within 14 days, notify Ecology in writing of its non-compliance. The notification will include the following:

**III.10.C.2.h.i** A description of any portion of the interim requirement completed;

**III.10.C.2.h.ii** Summaries of any problems affecting timely completion of the interim requirement;

**III.10.C.2.h.iii** A description of the plans for completing the remaining portion of the interim requirement, including any alternatives;

**III.10.C.2.h.iv** Projected interim requirement completion date.

**III.10.C.2.i** RESERVED

**III.10.C.2.j** RESERVED

**III.10.C.2.k** RESERVED

**III.10.C.2.l** During demonstration testing of the LAW Vitrification System and HLW Vitrification System, pursuant to Permit Sections III.10.H. and J., processing of materials in the LAW and HLW Vitrification Systems that would designate as dangerous waste are fully subject to the requirements of this Permit, excluding the melter feed system as identified in Tables III.10.H.A. and III.10.J.A., respectively. This exclusion does not apply to mixed waste.

**III.10.C.2.m** The Facility Owner will ensure WTP input is provided to the risk budget tool developed in accordance with permit condition III.11.I.5.

**III.10.C.2.n** The Permittees will submit the following reports, based on the August 2006 mass balance submitted to Ecology (DOE Letter 06-ESQ-081), for Ecology's review and comment/resolution. Updated information to the August 2006 Mass Balance may be used if available and mutually agreed upon by the Permittees and Ecology. The reports will describe all of the treatment approaches identified in Permit Conditions III.10.C.2.n.i through III.10.C.2.n.v, and will be included in the administrative record.

**III.10.C.2.n.i** By June 30, 2010, the Permittees will perform an assessment that projects mixed waste constituents and the concentrations that are expected to be contained in each secondary mixed waste stream anticipated to be generated;

**III.10.C.2.n.ii** By June 30, 2010, the Permittees will identify appropriate LDR treatment standards for each mixed waste stream identified in Permit Condition III.10.C.2.n.i;

**III.10.C.2.n.iii** By June 30, 2010, the Permittees will identify which mixed waste streams that, from a qualitative risk perspective, reasonably may cause or may significantly contribute to an exceedance of applicable environmental standards at a disposal facility; and

**III.10.C.2.n.iv** By June 30, 2010, the Permittees will, for the mixed waste streams identified in Permit Condition III.10.C.2.n.iii, identify potential treatment approaches that mitigate their environmental impacts;

**III.10.C.2.n.v** By December 31, 2015, or 12 months prior to cold commissioning of the facility producing the waste, whichever is earlier, the Permittees will, for the mixed waste streams identified in Permit Condition III.10.C.2.n.iii, select appropriate treatment approaches that mitigate their environmental impacts.

**III.10.C.2.o** The Facility owner will evaluate all waste streams generated at the WTP for potential exceedances of applicable environmental standards and will ensure all mixed and dangerous waste streams generated at the WTP will not cause an exceedance of

applicable environmental standards at an appropriate disposal facility on-site and is subject to the following requirements:

**III.10.C.2.o.i** ILAW glass will be engineered to be compliant with the disposal facility Waste Acceptance Criteria (WAC). The waste feed and ILAW glass recipes will be verified to be compliant with the permitted glass formulations (including planning for pertinent operating parameters) prior to vitrification.

**III.10.C.2.o.ii** Treatment methods for secondary waste streams projected to be generated by the WTP that are slated for disposal at the Hanford Site will be engineered to ensure that treated secondary wastes will comply with the on-site disposal facility WAC and applicable LDRs prior to generation. Prior to treatment, secondary wastes must be evaluated to ensure that selected treatment methods are still appropriate and continue to comply with the on-site disposal facility WAC and applicable LDRs; and

**III.10.C.2.o.iii** On a case-by-case basis, for any WTP mixed waste that does not meet the WAC for the disposal facility, Ecology will approve or deny acceptance of that waste into the disposal facility. This decision will be based on the disposal facility's WAC and compliance with WAC 173-303-140.

**III.10.C.3 Waste Analysis**

**III.10.C.3.a** RESERVED

**III.10.C.3.b** RESERVED

**III.10.C.3.c** The Permittees are responsible for obtaining accurate information for each waste stream. Inaccurate waste analysis information provided by the generating site (or unit) is not a defense for noncompliance by the Permittees with conditions of this Permit.

**III.10.C.3.d** Records and results of waste analyses conducted under the WAP will be maintained in accordance with Permit Condition II.I.1. The WTP Unit operating record will include, but not be limited to, information requirements for monitoring in Permit Conditions I.F.1, I.F.2, and I.F.3.

**III.10.C.3.e** Prior to the initial receipt of dangerous and/or mixed waste in the WTP Unit, the Permittees will submit to Ecology for review and approval a revised WAP and QAPP pursuant to Conditions III.10.C.2.e and III.10.C.2.f, and the Compliance Schedule in Operating Unit Group 10, Appendix 1.0. The revised WAP and QAPP will include:

**III.10.C.3.e.i** All the elements listed in WAC 173-303-300(5), and Permit Condition II.D.1.

**III.10.C.3.e.ii** Requirements that characterization will be performed on the waste feed prior to transfer to the WTP Unit in conformance with the regulatory data quality objectives identified in the Regulatory DQO Optimization Report (24590-WTP-RPT-MGT-04-001, Rev 0 ), or any other parameters, and the rational for selecting these parameters. Requirements that the following analyses, at a minimum, will be conducted on each new batch prior to waste transfer to the WTP Unit, in accordance with the methods under WAC 173-303-110: Ammonia, pH, metals, organic acids, mercury, cyanide, volatiles, semi-volatiles, PCBs/pesticides, anions, TOC, and compatibility (ASTM Method D5058-90). For the purposes of this Permit Condition, a "new batch" is one that has been sampled and analyzed in accordance with the Regulatory DQO Optimization Report (24590-WTP-RPT-MGT-04-001, Rev 0 ), and has received no further additions. Further additions require the Permittees to resample and reanalyze, unless an exception is approved by Ecology on a case-by-case basis. Only mixed waste meeting the definition of "new batch", or granted an exception as discussed

above, are authorized for transfer to the WTP Unit. Water additions for the purposes of waste transfer are not considered additions for the purposes of this Permit Condition.

**III.10.C.3.e.iii** Identify and include operating parameters to be monitored/controlled and limitations for these parameters for pre-process, in-process, and post-process operations addressing on a unit specific basis treatment effectiveness, as specified in Tables III.10.E.E through H and S, III.10.G.C, III.10.H.C, III.10.I.C, III.10.J.C, III.10.K.C, waste compatibility, safe operation, and compatibility with unit materials of construction. Amend the sampling, analysis, and Quality Assurance/Quality Control (QA/QC) procedures to include these parameters and the monitoring frequency.

**III.10.C.3.e.iv** Requirements that the Permittees will, for Type I (primary) sumps if liquids are detected, and for Type II (secondary) sumps, as defined in Operating Unit Group 10, Chapter 4, if liquid levels are outside normal operating parameters, either collect the liquid and return to the treatment process, or designate the sump contents for proper management and disposal prior to removal.

**III.10.C.3.e.v** For ILAW containers and IHLW canisters, a description of the procedures used for removal of mixed dangerous waste from exterior container surfaces, including a description of how contamination removal will be measured.

**III.10.C.3.e.vi** Requirement that wastes generated at the WTP Unit meet the receiving authorized TSD facility waste acceptance criteria prior to a waste stream transfer.

**III.10.C.3.e.vii** The frequency with which analysis of each waste will be reviewed, or repeated, to ensure that the analysis is accurate and current, including requirements and criteria for reevaluation of the sampling and analysis frequency for all waste streams.

**III.10.C.3.e.viii** Documentation demonstrating methods for obtaining samples of wastes are representative as discussed in WAC 173-303-110(2).

**III.10.C.3.e.ix** Where applicable, the methods for meeting the additional waste analysis requirements for specific waste management methods, as specified in WAC 173-303-140(4), 173-303-395(1), 173-303-630 through 173-303-695.

**III.10.C.3.e.x** For waste transferred from other permitted TSDs, the procedures for confirming that each dangerous waste received matches the identity of the waste specified on the accompanying waste profile documentation. This includes the procedure for identifying each waste movement at the Facility.

### III.10.C.4 Recordkeeping

**III.10.C.4.a** The unit specific portion of the Hanford Facility Operating Record will include the documentation specified in Permit Attachment 6, Permit Condition II.I, (applicable to the WTP Unit), and other documentation specified in Operating Unit Group 10. Permit Attachment 6 provides a list of required records, and the methods of submittal for the facility and each unit group.

### III.10.C.5 Procedure to Prevent Hazards

**III.10.C.5.a** The Permittees will design, construct, and operate the WTP Unit in compliance with Operating Unit Group 10, Chapter 6, Section 6.1.

**III.10.C.5.b** The WTP Unit fire protection systems will be constructed to the applicable codes listed in Operating Unit Group 10, Chapter 6, Section 6.3.1.4. Prior to the initial receipt of dangerous and/or mixed waste in the WTP Unit, the Permittees will update Operating Unit Group 10, Chapter 6, Sections 6.3, 6.4, and 6.5 to be consistent with design details,

and resubmit for approval as a permit modification pursuant to Permit Conditions III.10.C.2.e and III.10.C.2.f, and Operating Unit Group 10, Appendix 1.0. In addition to the stand-by diesel generator for the LAW and HLW melters, updated Section 6.4.4. will include descriptions of the essential loads and critical systems supplied with back-up, un-interruptible, and standby power.

**III.10.C.5.c** The Permittees will inspect the WTP Unit to prevent malfunctions and deterioration, operator errors, and discharges that may cause or lead to the release of dangerous waste constituents to the environment, or a threat to human health. Inspections must be conducted in accordance with the WTP Unit Inspection Plan, Operating Unit Group 10, Chapter 6, Section 6.2, and Chapter 6A. Prior to the receipt of dangerous and/or mixed waste in the WTP Unit, the Permittees will update and resubmit to Ecology for review and approval Chapter 6, Section 6.2 and the Inspection Plan in Chapter 6A as a permit modification pursuant to Permit Conditions III.10.C.2.e and III.10.C.2.f, and Compliance Schedule in Operating Unit Group 10, Appendix 1.0. The revised schedule will include, but not be limited to the requirements in WAC 173-303-320(2) and III.10.C.5.c.i. through v. below.

**III.10.C.5.c.i** Detailed dangerous and/or mixed waste management unit specific and general inspection schedules and description of procedures pursuant to WAC 173-303-395(1)(d), 173-303-630(6), 173-303-640(4)(a)(i) and (6), 173-303-670(7)(b) in accordance with 173-303-680(3), and 173-303-695. The inspection schedule will be presented in the form of a table that includes a description of the inspection requirements, inspection frequency, and types of problems to look for during the inspections.

**III.10.C.5.c.ii** The proposed locations (scaled drawing with layout) and capabilities of camera(s) (i.e., zoom angles, field of view, etc.) to be used for remote inspections.

**III.10.C.5.c.iii** Schedule and program description for performing integrity assessments as specified in Permit Conditions III.10.E.9.e.i., III.10.G.10.e.i., III.10.H.5.e.i., III.10.I.1.a.v., III.10.J.5.e.i., and III.10.K.1.a.v.

**III.10.C.5.c.iv** Inspection schedules for leak detection system and control instrumentation to include, but not limited to, valves pressure devices, flow devices, measuring devices, as specified in Permit Conditions III.10.E.9.e.xi, III.10.F.3.c, and III.10.G.10.e.xii, and Permit Conditions III.10.H.5.f.xvi, and III.10.J.5.f.xvi.

**III.10.C.5.c.v** Inspection schedule will include inspections for all dangerous and/or mixed waste management units specified in Permit Sections III.10.D, E, F, G, H, I, J, and K.

**III.10.C.5.d** The Permittees will equip the WTP Unit with the equipment specified in Operating Unit Group 10, Chapter 6, as required by Permit Condition II.B.1.

**III.10.C.5.e** The Permittees will test and maintain the equipment specified in Operating Unit Group 10, Chapter 6 and Chapter 6A, as necessary, to assure proper operation in the event of emergency.

**III.10.C.5.f** The Permittees will maintain access to communications or alarms as provided in the Contingency Plan, Operating Unit Group 10, Chapter 7 and Permit Condition II.B.2.

**III.10.C.6 Contingency Plan**

**III.10.C.6.a** The Permittees will immediately carry out applicable provisions of Permit Condition II.A.1 and the Contingency Plan, Operating Unit Group 10, Chapter 7 whenever there is a

release of dangerous and/or mixed waste or dangerous waste constituents, or other emergency circumstance, any of which threatens human health or the environment.

**III.10.C.6.b** Prior to the initial receipt of dangerous and/or mixed waste in the WTP Unit, the Permittees will update the Contingency Plan, Operating Unit Group 10, Chapter 7, to be consistent with design details and WAC 173-303-350(3), incorporated by reference, and resubmit as a permit modification pursuant to Permit Conditions III.10.C.2.e and III.10.C.2.f, in compliance with WAC 173-303-350(5)(c), and Operating Unit Group 10, Appendix 1.0.

**III.10.C.6.c** After initial receipt of dangerous and/or mixed waste in the WTP Unit, the Permittees will review and amend, if necessary, the applicable portions of the Contingency Plan the , Operating Unit Group 10, Chapter 7 in accordance with the provision of WAC 173-303-350(5). Chapter 7 will be amended as a permit modification pursuant to Permit Conditions III.10.C.2.e and III.10.C.2.f.

**III.10.C.6.d** RESERVED

**III.10.C.6.e** RESERVED

**III.10.C.7 Personnel Training**

**III.10.C.7.a** Prior to the initial receipt of dangerous and/or mixed waste in the WTP Unit, the Permittees will update and resubmit, to Ecology for review and approval, the Training Program description in Operating Unit Group 10, Chapter 8 as a permit modification pursuant to Permit Conditions III.10.C.2.e and III.10.C.2.f, and Compliance Schedule in Operating Unit Group 10, Appendix 1.0. The revised Training Program description will include but not be limited to:

**III.10.C.7.a.i** Detailed unit specific and general Training Program descriptions) as required to demonstrate compliance with WAC 173-303-330 and to include:

**III.10.C.7.a.i.A** Job titles and descriptions for each dangerous waste management position (e.g. waste designator, waste operator, laboratory technician, etc.);

**III.10.C.7.a.i.B** Outline of the training program updated to discuss initial, refresher, and on-the-job training; correlated to each dangerous waste management position;

**III.10.C.7.a.i.C** Table 8-1 in Operating Unit Group 10, Chapter 8, updated to include the type and amount of introductory, refresher, and on-the-job training required for each dangerous waste management position [WAC 173-303-806(4)(a)(xii)].

**III.10.C.7.a.ii** Sufficient detail to document that the training and qualification program for all categories of personnel whose activities may reasonably be expected to directly affect emissions from the LAW, HLW, and EMF Systems, except control room operators, is appropriately consistent with 40 CFR 63.1206(c)(6)(ii), and for control room operators, is appropriately consistent with 40 CFR 63.1206(c)(6)(i) and 63.1206(c)(6)(iii) through 63.1206(c)(6)(vi) [WAC 173-303-680(2)].

**III.10.C.7.b** The Permittees will ensure that the LAW, HLW, and EMF Systems are operated and maintained, at all times, by persons who are trained and qualified to perform these and any other duties that may reasonably be expected to directly affect emissions from the LAW, HLW, and EMF Systems [WAC 173-303-680(2)].

**III.10.C.7.c** The Permittees will conduct personnel training in accordance with the approved description of the WTP Dangerous Waste Training Plan, Operating Unit Group 10,

Chapter 8, pursuant to WAC 173-303-330. The Permittees will maintain documents in accordance with Permit Condition II.C.1 and WAC 173-303-330(2) and (3).

**III.10.C.7.d** RESERVED.

**III.10.C.7.e** The Permittees will submit, under separate cover, the actual detailed WTP Dangerous Waste Training Plan in accordance with the Compliance Schedule in Operating Unit Group 10, Appendix 1.0. The WTP Dangerous Waste Training Plan will be reviewed for compliance with the outline of the training program in Operating Unit Group 10, Chapter 8 and requirements of WAC 173-303-330. The Training Plan will be incorporated into the Administrative Record.

**III.10.C.8 Closure**

**III.10.C.8.a** The Permittees must conduct closure of the WTP Unit according to the Closure Plan in Operating Unit Group 10, Chapter 11, and Permit Condition III.10.C.8. The closure plan will be modified according to provisions of Permit Condition I.C.3.

**III.10.C.8.b** Prior to initial receipt of dangerous and/or mixed waste in the WTP Unit, the Permittees will update and resubmit the Closure Plan, Operating Unit Group 10, Chapter 11 for approval as a permit modification pursuant to Permit Condition III.10.C.2.g., to be consistent with design details and schedule described in Operating Unit Group 10, Appendix 1.0. The updated Closure Plan must be consistent with the closure performance standards specified in WAC 173-303-610(2)(a)-(b), WAC 173-340 and, in addition for Containment Buildings, consistent with 40 CFR 264.1102(b) as referenced by WAC 173-303-695.

**III.10.C.8.c** The Permittees will submit, for Ecology review and approval, an update to the Closure Plan, Operating Unit Group 10, Chapter 11, including all documentation required by Permit Condition II.D, within one hundred eighty (180) days prior to commencing partial closure, as a permit modification pursuant to Permit Conditions III.10.C.2.e and III.10.C.2.f.

**III.10.C.8.d** One hundred eighty (180) days prior to commencing final closure of Operating Unit Group 10, the Permittees must submit to Ecology, for review and approval, a revised Closure Plan, including all documentation required by Permit Condition II.D, as a permit modification pursuant to Permit Conditions III.10.C.2.e and III.10.C.2.f.

**III.10.C.8.e** RESERVED

**III.10.C.8.f** To achieve clean closure, the Permittees will remove dangerous waste, dangerous waste constituents, and dangerous waste residues throughout the closing unit and throughout any areas affected by releases from the closing unit to concentrations that do not exceed numeric cleanup levels determined using residential exposure assumptions according to the Model Toxics Control Act (MTCA) Regulations, Chapter 173-340 WAC and all structures, equipment, bases, liners, and other materials containing or contaminated with dangerous waste, constituents, or residues have met specific waste removal and decontamination standards approved by Ecology, in accordance with WAC 173-303-610(2)(b)(i)-(ii).

**III.10.C.8.g** RESERVED.

**III.10.C.8.h** Documentation supporting the independent registered professional engineer's certification of closure must be submitted to Ecology with the closure certification required by WAC 173-303-610(6). In addition to the items in Operating Unit Group 10,

Chapter 11, the documentation must include the following and other information Ecology may request.

**III.10.C.8.h.i** Sampling procedures that were followed;

**III.10.C.8.h.ii** Soil and concrete locations that were sampled;

**III.10.C.8.h.iii** Sample labeling and handling procedures that were followed, including chain of custody procedures;

**III.10.C.8.h.iv** Description of procedures that were followed to decontaminate concrete or metal to meet the clean closure standards approved by Ecology, in accordance with the closure performance standards of WAC 173-303-610(2)(a)(ii) and in a manner that minimizes or eliminates post-closure escape of dangerous waste constituents, or to achieve a "clean debris surface" as specified in 40 CFR 268.45, Table 1, concrete surfaces, as incorporated by reference in WAC 173-303-140. [WAC 173-303-610(2)(b)(ii)].

**III.10.C.8.h.v** Laboratory and field data, including supporting QA/QC summary;

**III.10.C.8.h.vi** Report that summarizes closure activities;

**III.10.C.8.h.vii** Copy of all field notes taken by the independent registered professional engineer; and

**III.10.C.8.h.viii** Copy of all contamination survey results.

**III.10.C.9 Critical Systems**

**III.10.C.9.a** The WTP Unit critical systems, as defined in the definition section of Operating Unit 10 and are identified in Operating Unit Group 10, Appendix 2.0.

**III.10.C.9.b** As the design proceeds, Ecology will modify this Permit for reasons described in the WAC 173-303-830(3) to add additional systems to the Critical Systems in Operating Unit Group 10, Appendix 2.0.

**III.10.C.9.c** The Permittees will conduct all construction subject to this Permit in accordance with the approved designs, plans, and specifications that are required by this Permit, except as specified in Conditions III.10.C.9.d. or III.10.C.9.e. For purposes of Conditions III.10.C.9.d. and III.10.C.9.e., the Ecology representative will be an Ecology construction inspector, project manager, or other designated representative of Ecology.

**III.10.C.9.d** The Permittees will submit a nonconformance report (NCR) or construction deficiency report (CDR) to the Ecology representative (s), as applicable, within seven (7) calendar days of the Permittees becoming aware of incorporation of minor nonconformance or construction deficiency from the approved designs, plans, and specifications into the construction of critical systems, as defined in the Hanford Site-wide Permit definition section. Such minor nonconformance or construction deficiency will be defined, for the purposes of this Permit Condition, as nonconformance or construction deficiency that is necessary to accommodate proper construction and the substitution or the use of equivalent or superior materials or equipment that do not substantially alter the Permit conditions or reduce the capacity of the facility to protect human health or the environment. Such minor nonconformance or construction deficiency will not be considered a modification of this Permit. If Ecology determines that the nonconformance or construction deficiency is not minor, it will notify the Permittees in writing that a permit modification is required for the deviation and whether prior approval is required

from Ecology before work proceeds which affect the nonconforming or construction deficiency item.

**III.10.C.9.e** The Permittees will formally document, with a nonconformance report (NCR) or construction deficiency report (CDR), as applicable, incorporation of minor nonconformance or construction deficiency from the approved designs, plans, and specifications into the construction of non-critical systems subject to this Permit. Such minor nonconformance or construction deficiency will not be considered a modification of this Permit. All NCR's and CDR's will be maintained in the WTP Unit Operating Record and will be made available to Ecology upon request or during the course of an inspection. If Ecology determines that the nonconformance or construction deficiency is not minor, it will notify the Permittees in writing that a permit modification is required for the deviation and whether prior approval is required from Ecology before work proceeds which affect the nonconforming or construction deficiency item.

**III.10.C.9.f** For each Critical System identified in Operating Unit Group 10, Appendix 2.0, the Permittees will submit to Ecology for review and approval, following the schedule in Operating Unit Group 10, Appendix 1.0, the information identified in Permit Conditions III.10.D.10., III.10.E.9., III.10.F.7., III.10.G.10., III.10.H.5., III.10.J.5., and III.10.M.9. Information Ecology determines to incorporate into the Permit will follow the Permit Condition III.10.C.2.g. process, unless stated otherwise within the specific permit condition. Information Ecology determines necessary to support design basis will be incorporated into the Administrative Record.

**III.10.C.9.g** Upon completion of the WTP Unit construction subject to this Permit, the Permittees will produce as-built drawings of the project which incorporate the design and construction modifications resulting from all change documentation as well as modifications made pursuant to Permit Conditions III.10.C.2.e., III.10.C.2.f., and III.10.C.2.g. The Permittees will place the as-built drawings into the operating record within twelve (12) months of completing construction.

**III.10.C.9.h** The Permittees will formally document changes to approved designs, plans, and specifications with design change documentation [e.g., Design Change Notice (DCN), Field Change Request (FCR), Field Change Notice (FCN), Specification Change Notice (SCN), and Supplier Deviation Disposition Request (SDDR)]. All design change documentation will be maintained in the WTP Unit-specific Operating Record and will be made available to Ecology upon request or during the course of an inspection. For any design change documentation affecting any critical systems, the Permittees will provide copies to Ecology within seven (7) calendar days. Identification of critical systems will be included by the Permittees in each WTP Unit-specific dangerous waste permit application, closure plan, or permit modification, as appropriate. If Ecology determines that the design change is not minor, it will notify the Permittees in writing that a permit modification is required for the design change and whether prior approval is required from Ecology before work affected by the design change may proceed.

**III.10.C.9.i** Ventilation system duct work is not required to be doubly contained within the WTP Unit. However, upon discovery of accumulation of liquids within the duct work, a compliance plan will be submitted within sixty (60) days of discovery to correct the problem.

### III.10.C.10 Equivalent Materials

**III.10.C.10.a** If certain equipment, materials, and administrative information (such as names, phone numbers, addresses, formatting) are specified in this Permit, the Permittees may use

equivalent or superior substitutes. Use of such equivalent or superior items within the limits (e.g., ranges, tolerances, and alternatives) already clearly specified in sufficient detail in Operating Unit Group 10, are not considered a Permit modification. However, the Permittees must place documentation of the substitution, accompanied by a narrative explanation and the date the substitution became effective in the operating record within seven (7) days of putting the substitution into effect, and submit documentation of the substitution to Ecology, for approval. Upon review of the documentation of the substitution, if deemed necessary, Ecology may require the Permittees to submit a permit modification in accordance with Permit Conditions III.10.C.2.e. and III.10.C.2.f.

**III.10.C.10.b** If Ecology determines that a substitution was not equivalent to the original, they will notify the Permittees that the Permittees' claim of equivalency has been denied, of the reasons for the denial, and that the original material or equipment must be used. If the product substitution is denied, the Permittees will comply with the original approved product specification, find an acceptable substitution, or apply for a permit modification in accordance with Permit Conditions III.10.C.2.e. and III.10.C.2.f.

### III.10.C.11 Risk Assessment

**III.10.C.11.a** The Permittees will submit a permit modification pursuant to Permit Conditions III.10.C.2.e. and III.10.C.2.f., in accordance with Operating Unit Group 10, Appendix 1.0, to Ecology to incorporate revisions to the "Environmental Risk Assessment Work Plan, Appendix 6.1. The revised document will be submitted for incorporation into Appendix 6.2 as the Final Risk Assessment Workplan. The Permittee will make revisions in consultation with Ecology to address the comments documented in Operating Unit Group 10, Appendix 6.1 and updated to address the following:

**III.10.C.11.a.i** EPA guidance for performance of Human Health and Ecological Risk Assessments for Hazardous Waste Combustion Facilities current at the time of the submittal, assuming both residential and non-residential use scenarios;

**III.10.C.11.a.ii** Toxicity data current at the time of the submittal;

**III.10.C.11.a.iii** Compounds newly identified or updated emissions data from current waste characterization and emission testing;

**III.10.C.11.a.iv** Air modeling updated to include stack gas parameters based on most current emissions testing and WTP Unit design;

**III.10.C.11.a.v** Physical/transport properties of constituents, current at the time of the submittal;

**III.10.C.11.a.vi** Process Description based on most current WTP Unit design;

**III.10.C.11.a.vii** Emissions data and all supporting calculations based on most current WTP Unit; and

**III.10.C.11.a.viii** Update of receptor locations based on land use or land use zoning changes, if any.

**III.10.C.11.b** Prior to initial receipt of dangerous and/or mixed waste in the WTP Unit, the Permittees will submit for Ecology review and approval as a permit modification pursuant to Permit Conditions III.10.C.2.e. and III.10.C.2.f., a Pre-Demonstration Test Risk Assessment

Report as Appendix 6.3. The Pre-Demonstration Test Risk Assessment Report will address and include the following:

**III.10.C.11.b.i** Direct and indirect human health and ecological risk assessments performed pursuant to the Final Risk Assessment Work Plan in Permit Condition III.10.C.11.a.

**III.10.C.11.b.ii** Submittal of projected stack emissions data for Tables III.10.G.D., III.10.H.E., and III.10.J.E. and;

**III.10.C.11.b.iii** Submittal of the Basis and Assumptions (for incorporation into Appendix 6.3) for these emissions, including but not limited to, projected operating conditions, feed-rates, and treatment effectiveness, consistent with information provided and approved pursuant to Permit Conditions III.10.G.6., III.10.G.10., III.10.H.1., III.10.H.5., III.10.J.1., and III.10.J.5.

**III.10.C.11.c** Within ninety (90) days of Ecology approval of the Demonstration Report(s) submitted pursuant to Permit Condition III.10.H.3.d.i, the Permittees will submit a Final Risk Assessment Report as Operating Unit Group 10, Appendix 6.4, incorporating the emission test results from the Demonstration Report(s). The Final Risk Assessment Report will be prepared in accordance with the Final Risk Assessment Work Plan in Appendix 6.2, (as approved pursuant to Permit Condition III.10.C.11.a), except the following updates are hereby incorporated. The Permittees will also submit with this Final Risk Assessment Report, Permit Tables III.10.G.D. and III.10.I.E. and Operating Unit Group 10, Appendix 6.4 (Basis and Assumptions) updated to incorporate the emissions data from this Final Risk Assessment Report(s), as a permit modification pursuant to Permit Conditions III.10.C.2.e. and III.10.C.2.f.

**III.10.C.11.c.i** Toxicity data current at the time of the submittal;

**III.10.C.11.c.ii** Compounds newly identified or updated emissions data from current waste characterization and emission testing;

**III.10.C.11.c.iii** Air modeling updated to include stack gas parameters based on most current emissions testing;

**III.10.C.11.c.iv** Physical/transport properties of constituents current at the time of the submittal;

**III.10.C.11.c.v** Update of receptor locations based on land use or land use zoning changes, if any;

**III.10.C.11.c.vi** Process description based on current WTP Unit design;

**III.10.C.11.c.vii** Emissions data and all supporting calculations based on current WTP Unit; and

**III.10.C.11.c.viii** Data from final risk assessment report pursuant to Permit Condition III.10.C.11.d, if available first, or simultaneously.

**III.10.C.11.d** Within ninety (90) days of Ecology approval of the Demonstration Report(s) submitted pursuant to Permit Condition III.10.J.3.d.i, the Permittees will submit a Final Risk Assessment Report as Operating Unit Group 10, Appendix 6.4, incorporating the emission test results from the Demonstration Report(s). The Final Risk Assessment Report will be prepared in accordance with the Final Risk Assessment Work Plan in Appendix 6.2, (as approved by Ecology pursuant to Permit Condition III.10.C.11.a), except the following updates are hereby incorporated. The Permittees will also submit with this Final Risk Assessment Report, Permit Tables III.10.G.D. and III.10.K.E. and Operating Unit Group 10, Appendix 6.4 (Basis and Assumptions) updated to incorporate the emissions data from this Final Risk Assessment Report, as a permit modification pursuant to Permit Conditions III.10.C.2.e. and III.10.C.2.f.

**III.10.C.11.d.i** Toxicity data current at the time of the submittal;

**III.10.C.11.d.ii** Compounds newly identified or updated emissions data from current waste characterization and emission testing;

**III.10.C.11.d.iii** Air modeling updated to include stack gas parameters based on most current emissions testing;

**III.10.C.11.d.iv** Physical/transport properties of constituents current at the time of the submittal;

**III.10.C.11.d.v** Update of receptor locations based on land use or land use zoning changes, if any;

**III.10.C.11.d.vi** Process description based on current WTP Unit design;

**III.10.C.11.d.vii** Emissions data and all supporting calculations based on current WTP Unit; and

**III.10.C.11.d.viii** Data from final risk assessment report pursuant to Permit Condition III.10.C.11.c, if available first, or simultaneously.

**III.10.C.11.e** The Final Risk Assessment Report(s) required by Permit Conditions III.10.C.11.c. and III.10.C.11.d. may be combined, or provided separately, as appropriate.

**III.10.C.12 RESERVED**

**III.10.C.13 Remote Data Access**

Onsite, unrestricted, twenty-four (24) hour access to key WTP Unit operating data and emissions monitoring data will be provided to Ecology. This onsite, unrestricted access will include providing and maintaining for Ecology only use a computer terminal and printer with access to key WTP Unit operating data bases and emissions monitoring data bases. This terminal will be equipped with all necessary software and hardware to monitor, retrieve, and trend this data. Additional remote access will be provided on Ecology request if security concerns can be addressed.

**III.10.C.14 Interim Period of Operation during Post Demonstration Test Period prior to receiving Ecology approval of the complete Demonstration Test Reports and the Final Risk Assessment Report.**

**III.10.C.14.a** During this Interim Period of Operation, the Permittees are authorized to treat dangerous waste and mixed waste feed meeting the waste acceptance criteria of the Waste Analysis Plan in Chapter 3, subject to the following conditions:

**III.10.C.14.a.i** Obtain receipt of Ecology's approval for the LAW Vitrification System according to Permit condition III.10.H.3.d.iii., prior to receiving dangerous or mixed waste feed into the LAW Vitrification System

**III.10.C.14.a.ii** Obtain receipt of Ecology's approval for the HLW Vitrification System according to Permit condition III.10.J.3.d.iii., prior to receiving dangerous or mixed waste feed into the HLW Vitrification System

**III.10.C.14.a.iii** Accept and treat up to 3 million gallons of Hanford tank waste feed in WTP.

**III.10.C.15 Support Systems**

**III.10.C.15.a** Mechanical Handling Systems

**III.10.C.15.a.i** The Permittees will submit to Ecology, pursuant to Permit Condition III.10.C.9.f., in accordance with the Compliance Schedule, as specified in Operating Unit Group 10, Appendix 1.0, engineering information as specified below, for incorporation into Appendices 9.6, 9.10, 10.6, and 10.10, or into the Administrative Record where noted.

A. System Descriptions for each Mechanical Handling system identified in Permit Table III.10.C.A, for incorporation into the Administrative Record (Compliance Schedule Item 36).

B. Mechanical Handling Diagrams and Mechanical Handling Data Sheets for the following pieces of equipment (Compliance Schedule Item 37):

a. HDH-CRN-00005
b. HEH-CRN-00003
c. HPH-CRN-00001
d. HPH-CRN-00002
e. HSH-CRN-00001
f. HSH-CRN-00014
g. LEH-CRN-00003
h. LPH-CRN-00002
i. HEH-CRN-00001

C. Permit condition III.10.C.15.a. does not require:

a. Additional submittals beyond those described in permit condition III.10.C.15.a.;
b. IQRPE reports for equipment identified in III.10.C.15.a.i (B);
c. Installation inspections for equipment identified in III.10.C.15.a.i(B); and
d. Other inspection, verification, operability, maintenance, or records management beyond that which is specified elsewhere in this permit, for equipment identified in III.10.C.15.a.i (B), or by conditions III.10.C.15.a.ii and III.10.C.15.a.iii.

**III.10.C.15.a.ii** The Permittees will submit to Ecology, pursuant to Permit Condition III.10.C.9.f., prior to initial receipt of dangerous waste and/or mixed waste in the WTP Unit, engineering information as identified below for incorporation into Appendices 9.13, 9.18, 10.13, and 10.18.

A. Equipment instrument logic narrative description related to safe operation of equipment covered by III.10.C.15.a.i(B), including but not limited to allowed travel path for bridge and trolley, upper and lower hook travel limits, two-blocking prevention, hook load limits, wire rope misreeling, and overspeed protection (Compliance Schedule Item 38).

B. Descriptions of operational procedures demonstrating appropriate controls and practices are in place to ensure equipment covered by III.10.C.15.a.i.(B) will be operated in a safe and reliable manner that will not result in damage to regulated tank systems, miscellaneous unit systems, or canisters of vitrified waste (Compliance Schedule Item 39).

**III.10.C.15.a.iii** Prior to initial receipt of dangerous and/or mixed waste in the WTP Unit, the Permittees will submit to Ecology, pursuant to Permit Condition III.10.C.9.f., the following for incorporation into Chapter 4: Updated Narrative Description and figures for all Mechanical Handling Systems identified in Permit Table III.10.C.A., to include but not limited to travel path, fail safe conditions, fail safe logic control, safety features and controls that minimize the potential for release of dangerous/mixed waste during normal operations, and lifting and/or load capabilities of each crane specified in III.10.C.15.a.i.(B).

| Tables III.10.C.A – Mechanical Handling Systems | | |
|---|---|---|
| Pretreatment Building | | |
| | Pretreatment Filter Cave Handling System | PFH |
| | Pretreatment In-Cell Handling System | PIH |
| | Radioactive Solid Waste Handling System | RWH |
| Low-Activity Waste Building | | |
| | Radioactive Solid Waste Handling System | RWH |
| | LAW Melter Equipment Support Handling System | LSH |
| | LAW Container Pour Handling System | LPH |
| | LAW Container Finishing Handling System | LFH |
| | LAW Melter Handling System | LMH |
| | LAW Canister Export Handling System | LEH |
| High-Level Waste Building | | |
| | HLW Melter Cave Support Handling System | HSH |
| | HLW Canister Export Handling System | HEH |
| | HLW Filter Cave Handling System | HFH |
| | HLW Canister Pour Handling System | HPH |
| | HLW Canister Decontamination Handling System | HDH |
| | HLW Melter Handling System | HMH |
| | Radioactive Solid Waste Handling System | RWH |

## III.10.D CONTAINERS

### III.10.D.1 Container Storage Areas and Storage Limits

**III.10.D.1.a** The Permittees may store dangerous and/or mixed waste meeting the waste acceptance criteria for containerized waste in the WAP, Operating Unit Group 10, Chapter 3, (as approved pursuant to Permit Conditions III.10.C.3. and III.10.C.2), for storage in dangerous and/or mixed waste container storage units identified in Tables III.10.D.A through C.

**III.10.D.1.b** The Permittees may store containerized dangerous and mixed waste only in container storage areas listed in Permit Tables III.10.D.A (as approved/modified pursuant to Permit Condition III.10.D.10.), in accordance with Permit Section III.10.D, and in accordance with Operating Unit Group 10, Chapters 1.0 and 4.0, and Appendices 9.4, 9.5, 9.7, 9.8, 9.9, 9.18, 10.4, 10.5, 10.7, 10.8, 10.9, 10.18, 12.4, 12.5, 12.7, 12.8, 12.9, and 12.15, as approved pursuant to Permit Conditions III.10.D.10.b. through d. The Permittees will limit the total volume of waste to quantities specified for the individual container storage areas listed in Permit Table III.10.D.A.

**III.10.D.1.c** The Permittees must maintain a free volume (i.e., free volume = total capacity of containment system minus volume occupied by equipment and containers within containment systems) within containment systems identified in Permit Tables III.10.D.B and III.10.D.C (as approved/modified pursuant to Permit Condition III.10.D.10.), equal to ten percent (10%) of the total volume of dangerous and mixed waste stored within the containment system, or the volume of the largest container stored within the containment system, whichever is greater.

**III.10.D.1.d** The Permittees will maintain documentation in the operating record for each container storage area listed in Permit Table III.10.D.A (as approved/modified pursuant to Permit Condition III.10.D.10.), in accordance with WAC 173-303-380.

**III.10.D.1.e** For the purpose of determining compliance with container storage area capacity limits and containment system requirements, every waste container will be considered to be full.

**III.10.D.1.f** RESERVED

### III.10.D.2 Container Storage Areas Design and Construction

**III.10.D.2.a** The Permittees will construct container storage areas identified in Permit Tables III.10.D.A through III.10.D.C, as specified in all applicable drawings and specifications in Operating Unit Group 10, Appendices 9.4, 9.5, 9.7, 9.8, 9.9, 10.4, 10.5, 10.7, 10.8, 10.9, 12.4, 12.5, 12.7, 12.8, and 12.9, as approved pursuant to Permit Condition III.10.D.10.b.

**III.10.D.2.b** RESERVED

**III.10.D.2.c** All container storage areas identified in Permit Tables III.10.D.A through III.10.D.C (as approved/modified pursuant to Permit Condition III.10.D.10.), must be constructed to protect containers from contact with accumulated liquids (e.g., leaks, spills, precipitation, fire water, liquids from damaged or broken pipes) [WAC 173-303-630(7)(a)(i) and WAC 173-303-630(7)(c)(ii)].

**III.10.D.2.d** Modifications to approved design, plans, and specifications for the container storage areas identified in Permit Tables III.10.D.A through III.10.D.C must be made in accordance with Permit Conditions III.10.C.2.e., f., and g, or III.10.C.9.d, e., and h.

### III.10.D.3 Container Storage Area Installation

**III.10.D.3.a** RESERVED

**III.10.D.3.b** The Permittees will obtain and place in the WTP Unit operating record, within thirty (30) days of completion of each container storage area identified in Permit Tables III.10.D.A, through III.10.D.C (as approved/modified pursuant to Permit Condition III.10.D.10.), written statements by a qualified, installation inspector or a qualified registered, professional engineer, attesting that these areas were installed in compliance with WAC 173-303-630(7)(a), (b), and (c) [WAC 173-303-630(7), WAC 173-303-806(4)(b)(i)].

### III.10.D.4 Container Management Practices

**III.10.D.4.a** RESERVED

**III.10.D.4.b** The Permittees will manage all waste in container storage areas identified in Permit Tables III.10.D.A through III.10.D.C (as approved/modified pursuant to Permit Condition III.10.D.10), in accordance with procedures described in Operating Unit Group 10, Chapter 4, Appendices 9.18, 10.18, and 12.15, as approved pursuant to Permit Condition III.10.D.10.c, and the following conditions:

**III.10.D.4.b.i** The operating records and waste tracking procedures will indicate all times at which containerized dangerous and mixed waste were removed from and returned to designated staging, storage, segregation, and treatment areas as approved pursuant to Permit Condition III.10.D.10.c.vi. (WAC 173-303-380).

**III.10.D.4.b.ii** The physical arrangement (i.e., spacing) of dangerous and mixed waste containers will be as specified in WAC 173-303-630(5)(c), except for the immobilized LAW

containers and IHLW waste canisters, which must be as described in Operating Unit Group 10, Chapter 4, Sections 4E.1.2.1, 4F.1.2.1, as updated pursuant to Permit Condition III.10.D.10.c.i.

**III.10.D.4.b.iii** All container storage areas must be operated to protect containers from contact with accumulated liquids resulting from leaks, spills, or precipitation [WAC 173-303-630(7)(a)(i) and (c)(ii)].

**III.10.D.4.b.iv** At all times, the Permittees will place and store ignitable and/or reactive dangerous and/or mixed waste in accordance with the procedures described in Operating Unit Group 10, Appendix 8.18, 9.18, 10.18, 11.18, 12.18, and 13.18 as approved pursuant to Permit Condition III.10.D.10.c.xi.

**III.10.D.4.b.v** At all times, the Permittees will place and store incompatible dangerous and/or mixed waste in accordance with the procedures described in Operating Unit Group 10, Appendix 8.18, 9.18, 10.18, 11.18, 12.18, and 13.18as approved pursuant to Permit Condition III.10.D.10.c.xii.

**III.10.D.4.b.vi** At all times, storage containers holding dangerous and/or mixed waste that contain free liquids and/or exhibit either the characteristic of ignitability or reactivity as described in WAC 173-303-090(5) or (7), must be provided with a containment system in accordance with WAC 173-303-630(7)(a)(i) through (iii) [WAC 173-303-630(7)(c)].

**III.10.D.4.b.vii** At all times, containers holding dangerous and/or mixed waste in container storage areas must be closed, except when it is necessary to add or remove waste [WAC 173-303-630(5)(a)].

**III.10.D.4.b.viii** At all times, containers holding dangerous and/or mixed waste must not be opened, handled, or stored in a manner which may rupture the container or cause it to leak [WAC 173-303-630(5)(b)].

**III.10.D.4.b.ix** A storage container holding a dangerous and/or mixed waste that is incompatible, as defined in WAC 173-303-040, with any waste or other materials stored nearby in other containers, piles, open tanks, or surface impoundments must be separated from the other waste or materials or protected from them by means of a dike, berm, or wall. [WAC 173-303-630(9)(c)].

**III.10.D.4.b.x** If a container holding dangerous and/or mixed waste is not in good condition (e.g., exhibits severe rusting, apparent structural defects, or any other condition that could lead to container rupture or leakage) or is leaking, the Permittees will manage the container in accordance with procedures described in Operating Unit Group 10, Appendices 8.15, 9.18, 10.18, 11.15, and 12.15, as approved pursuant to Permit Condition III.10.D.10.c.viii. [WAC 173-303-630(2)].

**III.10.D.4.b.xi** RESERVED

**III.10.D.4.b.xii** The Permittees will ensure that all containers used for dangerous and/or mixed waste management, are made of or lined with materials which will not react with and are otherwise compatible with the waste to be stored [WAC 173-303-630(4)].

**III.10.D.4.b.xiii** Except for lab packs assembled in compliance with WAC 173-303-161 requirements, the Permittees will not place incompatible wastes, or incompatible wastes and

materials, in the same container, unless WAC 173-303-395(1)(b) is complied with [WAC 173-303-630(9)(a)].

**III.10.D.4.b.xiv** The Permittees will not place dangerous and/or mixed waste in an unwashed container that previously held an incompatible waste or material [WAC 173-303-630(9)(b)].

### III.10.D.5 Identification of Containers and Container Storage Areas

**III.10.D.5.a** Pursuant to WAC 173-303-630(3), the Permittees will ensure that all dangerous and/or mixed waste containers (except as otherwise specified in Operating Unit Group 10, Chapter 4, Sections 4D.1.3, 4E.1.3, 4F.1.3, 4H.1.3, 4I.1.3, as updated pursuant to Permit Condition III.10.D.10.c.i., for containers of ILAW and IHLW) are labeled in a manner that adequately identifies the major risk(s) associated with the contents. For purposes of container labeling, major risk(s) could include but are not limited to the following:

**III.10.D.5.a.i** PERSISTENT (if a WP01 or WP02 waste code);

**III.10.D.5.a.ii** TOXIC (if a WT01, WT02, or D waste code other than D001, D002, or D003);

**III.10.D.5.a.iii** IGNITABILITY (if a D001 and other waste codes);

**III.10.D.5.a.iv** CORROSIVE (if a D002 and other waste codes);

**III.10.D.5.a.v** REACTIVE (if a D003 and other waste codes).

**III.10.D.5.b** For all dangerous and mixed waste containers (except as otherwise specified in Operating Unit Group 10, Chapter 4, Sections 4D.1.3, 4E.1.3, 4F.1.3, 4H.1.3, 4I.1.3, as updated pursuant to Permit Condition III.10.D.10.c.i., for containers of ILAW and canisters of IHLW), the Permittees will ensure that:

**III.10.D.5.b.i** Labels are not obscured or otherwise unreadable;

**III.10.D.5.b.ii** Waste containers are oriented so as to allow inspection of the labels identified in Permit Conditions III.10.D.5.a and III.10.D.5.b, the container tracking number, and, to the extent possible, any labels which the generator placed upon the container; and

**III.10.D.5.b.iii** Empty dangerous and mixed waste containers, as defined by WAC 173-303-160(2), must have their dangerous and/or mixed waste labels destroyed or otherwise removed immediately upon being rendered empty.

**III.10.D.5.c** The Permittees will post entrances and access points to all ILAW containers and IHLW canister storage areas, and any other areas where containers of ILAW and IHLW are handled, with signs that, in addition to meeting the requirements of WAC 173-303-310(2)(a), clearly identify the major risk(s) associated with the containers of ILAW and IHLW.

### III.10.D.6 Containment Systems

Containerized dangerous and mixed waste, and other materials that are incompatible, will not be staged, segregated, or stored within the same containment system as identified in Permit Table III.10.D.C., as approved/modified pursuant to Permit Condition III.10.D.10. (e.g., metal pan, concrete berm, portable containment system) [WAC 173-303-630(9)(c)].

**III.10.D.6.a** The integrity of containment systems identified in Permit Table III.10.D.C. (as approved/modified pursuant to Permit Condition III.10.D.10.) must be maintained so that cracks, gaps, loss of integrity, deterioration, corrosion, or erosion of containment pads, joints in containment pads, berms, curbs, trenches, sumps, and coatings are repaired

in accordance with Operating Unit Group 10, Chapter 6, as approved/modified pursuant to Permit Conditions III.10.D.10.c.vii., III.10.C.5.b., and III.10.C.5.c. [WAC 173-303-320, WAC 173-303-630(7)(a)(i)].

**III.10.D.6.b** An impermeable coating, as specified in Operating Unit Group 10, Appendices 9.4, 9.5, 9.7, 9.8, 9.9, 10.4, 10.5, 10.7, 10.8, 10.9, 12.4, 12.5, 12.7, 12.8, and 12.9 will be maintained for all concrete containment systems and will meet the following performance standards [WAC 173-303-630(7)(a)]:

**III.10.D.6.b.i** The coating must seal the containment system surface such that no cracks, seams, or other pathways through which liquid could migrate are present;

**III.10.D.6.b.ii** The coating must be of adequate thickness and strength to withstand the normal operation of equipment and personnel within the given area such that degradation or physical damage to the coating or lining can be identified and remedied before waste could migrate from the containment system; and

**III.10.D.6.b.iii** The coating must be compatible with the waste managed in the containment system.

**III.10.D.6.c** The Permittees must inspect all containment systems specified in Permit Table III.10.D.C in accordance with the inspection schedules and requirements in Operating Unit Group 10, Chapter 6, as approved/modified pursuant to Permit Conditions III.10.D.10.c.vii. and III.10.C.5.c, and take the following actions if liquid is detected in these containment systems:

**III.10.D.6.c.i** Remove the liquid from the containment system in accordance with procedures described in Operating Unit Group 10, Chapter 6, (as modified pursuant to Permit Conditions III.10.C.5.b. and III.10.C.5.c.), Permit Condition III.10.C.6.a., and Operating Unit Group 10, Chapter 7 (as modified pursuant to Permit Condition III.10.C.6.b. and III.10.C.6.c.). The liquid removed from containment systems will be managed as dangerous and/or mixed waste, except for liquids from the Non-Radioactive Dangerous Waste Container Storage Area which will be managed as dangerous waste, unless the Permittees demonstrate through designation, (in accordance with WAC 173-303-070, incorporated by reference), that the liquid is no longer dangerous.

**III.10.D.6.c.ii** Determine the source of the liquid.

**III.10.D.6.c.iii** If the source of the liquid is determined to be a leak in a container, the Permittees must follow the procedures specified in Permit Condition III.10.D.4.b.x.

**III.10.D.6.c.iv** The Permittees must take action to ensure the incident that caused liquid to enter the containment system will not reoccur.

**III.10.D.6.c.v** The Permittees will document in the WTP Unit operating record actions/procedures taken to comply with i. through iv. above in accordance with WAC 173-303-630(6).

**III.10.D.6.c.vi** The Permittees will notify and report releases to the environment to Ecology in accordance with Permit Condition III.10.C.6.a.

### III.10.D.7 Inspections

**III.10.D.7.a** The Permittees will inspect the container storage areas in accordance with the Inspection Schedules in Operating Unit Group 10, Chapter 6 of this Permit, as modified pursuant to Permit Condition III.10.C.5.c.

**III.10.D.7.b** The inspection data for the container storage areas will be recorded, and the records will be placed in the WTP Unit operating record in accordance with Permit Condition III.10.C.4.

### III.10.D.8 Recordkeeping (WAC 173-303-380)

For the container storage areas, the Permittees will record and maintain in the WTP Unit operating record, all monitoring, recording, maintenance, calibration, test data, and inspection data compiled under the conditions of this Permit, in accordance with Permit Condition III.10.C.4. and III.10.C.5.

### III.10.D.9 Closure

The Permittees will close the container storage areas identified in Permit Tables III.10.D.A through III.10.D.C in accordance with Operating Unit Group 10, Chapter 11 of this Permit, as approved pursuant to Permit Condition III.10.C.8.

### III.10.D.10 Compliance Schedules

**III.10.D.10.a** All information identified for submittal to Ecology in III.10.D.10.b. through III.10.D.10.d. of this compliance schedule must be signed in accordance with requirements in WAC 173-303-810(12).

**III.10.D.10.b** The Permittees will submit to Ecology, consistent with the schedule described in Operating Unit Group 10, Appendix 1.0, for review and approval, prior to construction of container storage area and associated containment systems as identified in Permit Tables III.10.D.A and III.10.D.B respectively, engineering information as specified below, for incorporation into Operating Unit Group 10, Appendices 9.4, 9.5, 9.7, 9.8, 9.9, 10.4, 10.5, 10.7, 10.8, 10.9, 12.4, 12.5, 12.7, 12.8, and 12.9 of this Permit. In order to incorporate engineering information specified below into Operating Unit Group 10, Appendices 9.4, 9.5, 9.7, 9.8, 9.9, 10.4, 10.5, 10.7, 10.8, 10.9, 12.4, 12.5, 12.7, 12.8, and 12.9, Permit Condition III.10.C.2.g. process will be followed. At a minimum, container storage area and containment system drawings and specifications will show the following pursuant to WAC 173-303-806(4)(b):

**III.10.D.10.b.i** Design drawings (General Arrangement Drawings - in plan ) and specifications including references to specific building codes (e.g., UBC, ASCE) for each container storage areas' foundation and associated containment system. These items should show basic design parameters and dimensions, and location of the container storage areas and associated containment systems; how containment system design promotes positive drainage control (such as a locked drainage valve) to prevent release of contaminated liquids and so that uncontaminated liquids can be drained promptly for convenience of operation; capacity of the containment system relative to the volume of the largest container to be stored; how the base underlying the containers is sloped (i.e., floor slopes to sumps) or the containment system is otherwise designed and operated to drain and remove liquids resulting from leaks, spills, or other liquids, or how containers are kept from contact with standing liquids in the containment system (i.e., elevated or are otherwise protected); for container storage areas without associated containment systems, a description of how the storage area is designed or

operated to drain and remove liquids or how containers are kept from contact with standing liquids;

**III.10.D.10.b.ii** Containment systems materials selection documentation (including, but not limited to, materials of construction, coatings and liner materials for concrete portions of containment systems);

**III.10.D.10.b.iii** Sketches, drawings, or data demonstrating compliance with WAC 173-303-630(8) (location of buffer zone and containers holding ignitable or reactive waste) and WAC 173-303-630(9)(c) (location of incompatible waste), where applicable;

**III.10.D.10.b.iv** Submit Permit Table III.10.D.B. completed to provide for all containment systems, the information as specified in each column heading, consistent with information to be provided in III.10.D.10.b.i. through iii. above.

**III.10.D.10.c** Prior to initial receipt of dangerous and/or mixed waste in the WTP Unit, the Permittees will update and submit to Ecology, consistent with the schedule described in Operating Unit Group 10, Appendix 1.0, for review and approval, the following, as specified below, for incorporation into Operating Unit Group 10, Chapter 4, and Appendices 9.18, 10.18, and 12.15, except Permit Condition III.10.D.10.c.vii., which will be incorporated into Operating Unit Group 10, Chapter 6. In order to incorporate the following information (specified below) into Operating Unit Group 10, Appendix 9.18, 10.18, and 12.18, Permit Condition III.10.C.2.g. will be followed. All information provided under this permit condition must be consistent with information provided pursuant to Permit Conditions III.10.D.10.b., III.10.D.10.c., and III.10.D.10.d. as approved by Ecology, and will include at a minimum, the following information as required pursuant to WAC 173-303-630 and WAC 173-303-340:

**III.10.D.10.c.i** Operating Unit Group 10, Chapter 4, Narrative Descriptions, updated;

**III.10.D.10.c.ii** Descriptions of procedures for addition and removal of waste from containers;

**III.10.D.10.c.iii** Descriptions of procedures for opening and closing of containers, including any inspections performed prior to opening;

**III.10.D.10.c.iv** Descriptions of procedures for handling and transport of containers within the WTP Unit;

**III.10.D.10.c.v** Description of the tracking system used to track containers throughout the WTP Unit pursuant to WAC 173-303-380. The tracking system, at a minimum, will do the following:

A. Track the location of containers within the WTP Unit;

B. Track which containers have been shipped off-facility and/or off-site, and to where they have been shipped;

C. For containers intended for transport off-site, include information in accordance with the requirements specified in WAC 173-303-190(3)(b);

D. Record the date container is placed in the container storage area;

E. Record the nature of the waste in any given container, including dangerous waste designation codes, any associated land disposal restriction treatment requirements, and the major risk(s) associated with the waste (as described in Permit Conditions III.10.D.5.a. and III.10.D.5.c.).

**III.10.D.10.c.vi** Descriptions of procedures for container spacing, stacking, and labeling pursuant to WAC 173-303-630(3), WAC 173-303-630(5)(c), WAC 173-303-340(3), WAC 173-303-630(6);

**III.10.D.10.c.vii** Descriptions of procedures for investigating container storage areas and investigating and repairing containment systems [WAC 173-303-320, WAC 173-303-630(6)];

**III.10.D.10.c.viii** Descriptions of procedures for responding to damaged (e.g., severe rusting, apparent structural defects) or leaking containers [WAC 173-303-630(2)];

**III.10.D.10.c.ix** Descriptions of operational procedures demonstrating how accumulated liquids can be analyzed and removed from containment systems to prevent overflow [WAC 173-303-806(4)(b)(i)(E)];

**III.10.D.10.c.x** For portable containment systems, vendor information, design drawings, or sketches showing the following information. These items will include as a minimum basic design parameters, dimensions, and materials of construction; how the design promotes positive drainage control (such as a locked drainage valve) to prevent release of contaminated liquids and so that uncontaminated liquids can be drained promptly for convenience of operation; how the base underlying the containers is sloped (i.e., floor slopes to sumps) or the containment system is otherwise designed and operated to drain and remove liquids resulting from leaks, spills, or other liquids, or how containers are kept from contact with standing liquids in the containment system (i.e., elevated or are otherwise protected); and capacity of the containment system relative to the volume of the largest container to be stored;

**III.10.D.10.c.xi** Where ignitable and reactive waste are stored or otherwise managed in containers, a description of the procedures used to ensure compliance with WAC 173-303-630(8)(a) and (b);

**III.10.D.10.c.xii** Where incompatible waste are stored or otherwise managed in containers, a description of the procedures used to ensure compliance with WAC 173-303-630(9)(a) and (b), and 173-303-395(1)(b) and (c);

**III.10.D.10.c.xiii** Submit Permit Table III.10.D.C completed to provide for all portable containment systems, the information as specified in each column heading, consistent with information to be provided in III.10.D.10.c.i. through xii. above;

**III.10.D.10.c.xiv** Test procedures and results or other documentation or information to show that the waste do not contain free liquids, as applicable.

**III.10.D.10.d** Prior to initial receipt of dangerous and/or mixed waste in the WTP Unit, the Permittees will submit to Ecology, consistent with the schedule described in Operating Unit Group 10, Appendix 1.0, for review and approval, completed Permit Tables III.10.D.A, III.10.D.B, and III.10.D.C, for incorporation into Operating Unit Group 10, Chapter 4, and Appendices 8.18, 9.18, and 10.18 of this Permit. In order to incorporate the information into Operating Unit Group 10, Chapter 4, and Appendices 8.18, 9.18, and 10.18 of this Permit, Permit Condition III.10.C.2.g. process will be followed.

**Table III.10.D.A –Container Storage/Containment Building Areas Description**

| Dangerous and Mixed Waste Container Storage Areas | Maximum Capacity Gallons (Solids)($ft^3$)[d] | Maximum Operating Volume (Liquid[c]) |
|---|---|---|
| **HLW Vitrification Plant** | | |
| IHLW Canister Storage Cave[a] (Room H-0132) | 163,599 gal. (21,870 $ft^3$) | NA |
| HLW East Corridor El. 0' (Rooms HC-0108/09/10) | 183,721 gal. (24,560 $ft^3$) | NA |
| HLW Loading Area (Room H-0130) | 142,204 gal. (19,010 $ft^3$) | NA |
| **Other Areas** | | |
| Non-Radioactive Dangerous Waste Container Storage Area[b] | 56,104 gal. (7,500 $ft^3$) | RESERVED |
| Failed Melter Storage Facility (Building 32)[f] | 403,947 gal. (54,000 $ft^3$) | RESERVED |
| Lab Waste Management Area (Rooms A-0139, A-0139A/B/C/D) | 139,586 gal. (18,660 $ft^3$) | RESERVED |
| **Containment Buildings/Container Storage** | **Maximum Capacity Gallons (Solids)($ft^3$)[d]** | **Maximum Operating Volume (Liquid[c])** |
| **Pretreatment Plant** | RESERVED | RESERVED |
| P-0123 Pretreatment Hotcell Containment Building | RESERVED | RESERVED |
| Pretreatment Maintenance Containment Building | RESERVED | RESERVED |
| PM0124 Hotcell Crane Maintenance Area | RESERVED | RESERVED |
| P-0121A Spent Resin Dewatering | RESERVED | RESERVED |
| P-0421A General Filter Room | RESERVED | RESERVED |
| P-0122A Waste Packaging Area | RESERVED | RESERVED |
| P-0123A Remote Decontamination Maintenance Cave | RESERVED | RESERVED |
| P-0124 C3 Workshop | RESERVED | RESERVED |
| P-0124A C3 Workshop | RESERVED | RESERVED |
| P-0125 Filter Cask Airlock | RESERVED | RESERVED |
| P-0125A Filter Cask Area | RESERVED | RESERVED |
| P-0128A MSM Repair Area | RESERVED | RESERVED |
| P-0128 Temporary Storage Room | RESERVED | RESERVED |
| P-0223 Pretreatment Filter Package Maintenance Containment Building | | |
| P-0335 Pretreatment Filter Cave Room | RESERVED | RESERVED |

| | | |
|---|---|---|
| P-0335A Decon Chamber | RESERVED | RESERVED |
| P-0431A General Filter Room | RESERVED | RESERVED |
| **LAW Vitrification Plant** | | |
| L-0112 LAW LSM Gallery Containment Building | RESERVED | RESERVED |
| LAW Container Finishing Containment Building | RESERVED | RESERVED |
| L-0109B Swabbing Area Line 2 | RESERVED | RESERVED |
| L-0109C Decontamination Area Line 2 | RESERVED | RESERVED |
| L-0109D Inert Fill Area Line 2 | RESERVED | RESERVED |
| L-0115B Swabbing Area Line 1 | RESERVED | RESERVED |
| L-0115C Decontamination Area Line 1 | RESERVED | RESERVED |
| L-0115D Inert Fill Area Line 1 | RESERVED | RESERVED |
| L-0109E Container Monitoring/Export Area | RESERVED | RESERVED |
| L-0115E Container Monitoring/Export Area | RESERVED | RESERVED |
| L-0119B LAW Consumable Import/Export Containment Building | RESERVED | RESERVED |
| L-0226A LAW C3 Workshop Containment Building | RESERVED | RESERVED |
| LAW Pour Cave Containment Building | RESERVED | RESERVED |
| L-B015A Melter 1 Pour Cave | RESERVED | RESERVED |
| L-B013C Melter 1 Pour Cave | RESERVED | RESERVED |
| L-B013B Melter 2 Pour Cave | RESERVED | RESERVED |
| L-B011C Melter 2 Pour Cave | RESERVED | RESERVED |
| L-B011B Future Melter 3 Pour Cave | RESERVED | RESERVED |
| L-B009B Future Melter 3 Pour Cave | RESERVED | RESERVED |
| **LAW Buffer Container Containment Building** | RESERVED | RESERVED |
| L-B025C Container Buffer Store | RESERVED | RESERVED |
| L-B025D Container Rework | RESERVED | RESERVED |
| **HLW Vitrification Plant** | | |
| HLW Melter Cave 1 Containment Building: | RESERVED | RESERVED |
| H-0117 Melter Cave 1 | | |
| H-0116B Melter Cave 1 C3/C5 Airlock | | |
| H-0310A Melter Cave 1 Equipment Decon Pit | | |
| HLW Melter Cave 2 Containment Building: | RESERVED | RESERVED |
| H-0106 Melter Cave 2 | | |
| H-0105B Melter Cave 2 C3/C5 Airlock | | |
| H-0304A Melter Cave 2 Equipment Decon Pit | | |
| H-0136 IHLW Canister Handling Cave Containment Building | RESERVED | RESERVED |
| H-0133 IHLW Canister Swab and Monitoring Cave Containment Building | RESERVED | RESERVED |
| HLW C3 Workshop Containment Building: | RESERVED | RESERVED |
| H-0311A C3 Workshop | | |

| | | |
|---|---|---|
| H-0311B C3 MSM Maintenance Workshop | | |
| H-0104 HLW Filter Cave Containment Building | RESERVED | RESERVED |
| H-B032 HLW Pour Tunnel 1 Containment Building | RESERVED | RESERVED |
| H-B005A HLW Pour Tunnel 2 Containment Building | RESERVED | RESERVED |
| HLW Waste Handling Area Containment Building: | RESERVED | RESERVED |
| H-0410B E&I Room | | |
| H0411 Waste Handling Room | | |
| HLW Drum Swabbing and Monitoring Area Containment Building: | RESERVED | RESERVED |
| H-0126A Crane Maintenance Room | | |
| H-0126B Swabbing and Monitoring Area | | |
| H-B028 Cask Transfer Tunnel | | |

[a]Capacity is for immobilized glass waste storage.

[b]Capacity is for dangerous and/or mixed waste storage.

[c]All material within the containment systems will be considered waste for the purposes of calculating free volume, where free volume is the amount of space available in containment systems (i.e., free volume = total capacity of containment systems [which includes total capacity of portable containment systems] minus volume occupied by equipment and containers within containment systems).

[d]Gallons converted to cubic feet using a conversion factor of 1 gallon (liquid) x 0.134 = $1ft^3$ (rounded to the nearest whole number).

[e]Location and capacities of containers stored within portable containment systems specified on Table III.10.D.C are limited to the dangerous and mixed waste container storage areas and capacities specified above.

[f]The dimension for height (H) is based on the height of the largest waste container stored in the area (i.e., LAW container is 7.5 ft., HLW canister is 15 ft., melters are assumed to be 16 ft., and a B-25 box is 5 ft. – stacked a maximum of two high is 10ft).

1 **Table III.10.D.B – Container Storage Area Containment Systems**

| Container Storage Areas | Permanent Containment System Description – Drawing #s | Permanent Containment System Sump/Floor Drain ID# | Permanent Containment System Dimensions[a] (ft) & Materials of Construction | Permanent Containment System Capacity (gal) (relative to 10% of the volume of all containers within the container storage area, or 100% of the volume of the largest container, whichever is greater). |
|---|---|---|---|---|
| Failed Melter Storage Facility (Building 32) | 24590-BOF-P1-32-00001, Rev. 2 | N/A | 45’ x 75” x 16’[b] | 403,947 gal. (54,000 $ft^3$) |

[a]Dimensions listed are based on permitted design. Actual dimensions may vary within plus or minus (TBD).

[b]The dimension for height (H) is based on the height of the largest waste container stored in the area (i.e., LAW container is 7.5 ft., HLW canister is 15 ft., melters are assumed to be 16 ft., and a B-25 box is 5 ft. – stacked a maximum of two high is 10 ft).

**Table III.10.D.C – Container Storage Area Portable Containment Systems[a]**

| Portable Containment System Description – Specifications and Vendor Information | Portable Containment System Container Storage Area(s) Location(s) | Portable Containment System Dimensions[b] (ft) & Materials of Construction | Portable Containment System Capacity (gal) (relative to 10% of the volume of all containers managed within the portable containment system, or 100% of the volume of the largest container, whichever is greater). |
|---|---|---|---|
| RESERVED | RESERVED | RESERVED | RESERVED |

[a] Location and capacities of containers stored within portable containment systems specified on this Permit Table are limited to the dangerous and mixed waste container storage areas and capacities specified in Permit Table III.10.D.A.

[b]Dimensions listed are based on permitted design. Actual dimensions may vary within plus or minus (TBD).

## III.10.E TANK SYSTEMS

### III.10.E.1 Approved Waste and Storage Limits

**III.10.E.1.a** The Permittees may store in tank systems all dangerous and/or mixed waste listed in the Part A Forms, Operating Unit Group 10, Chapter 1 of this Permit and in accordance with the Waste Analysis Plan, Operating Unit Group 10, Chapter 3 as approved pursuant to Permit Condition III.10.C.3. of this Permit. Total tank system dangerous and/or mixed waste storage at the Facility will not exceed the volume(s) specified in the Part A Form 3 Permit Application, Chapter 1 of this permit.

**III.10.E.1.b** The Permittees may store and manage dangerous and/or mixed waste only in approved tank systems listed in Permit Tables III.10.E.A through D, I, K, M, O, and R as approved/modified pursuant to Permit Condition III.10.E.9., in accordance with Permit Section III.10.E of this Permit, and in accordance with Operating Unit Group 10, Chapter 1 and 4, and Operating Unit Group 10, Appendices 8.1 through 8.15, 9.1 through 9.14, 9.18, 10.1 through 10.14, 10.18, 11.1 through 11.15, and 13.1 through 13.18 of this Permit, as approved pursuant to Permit Conditions III.10.E.9.b through e. The Permittees will limit the total volume of waste to quantities specified for the individual units listed in Permit Tables III.10.E.A through D, I, K, M, O, and R.

**III.10.E.1.c** The Permittees will manage ignitable and reactive, and incompatible waste in accordance with WAC 173-303-395(1). Any tank system specified in Permit Tables III.10.E.A through D and III.10.E, I, K, M, O, and S as approved/modified pursuant to Permit Condition III.10.E.9., in which ignitable, reactive, or incompatible waste are managed will meet the requirements specified in WAC 173-303-640(9) and (10).

**III.10.E.1.d** The Permittees will ensure all certifications required by specialists (e.g., independent, qualified, registered professional engineer; independent corrosion expert; independent, qualified installation inspector; etc.) use the following statement or equivalent pursuant to Permit Condition III.10.C.10 of this Permit:

"I, (Insert Name) have (choose one or more of the following: overseen, supervised, reviewed, and/or certified) a portion of the design or installation of a new tank system or component located at (address), and owned/operated by (name(s)). My duties were: (e.g., installation inspector, testing for tightness, etc.), for the following tank system components (e.g., the tank, venting piping, etc.), as required by the Dangerous Waste Regulations, namely, WAC 173-303-640(3) (applicable paragraphs (i.e., (a) through (g)).

"I certify under penalty of law that I have personally examined and am familiar with the information submitted in this document and all attachments and that, based on my inquiry of those individuals immediately responsible for obtaining the information, I believe that the information is true, accurate, and complete. I am aware that there are significant penalties for submitting false information, including the possibility of fine and imprisonment."

**III.10.E.1.e** In all future permit submittals, the Permittees will include tank names with the tank designation (e.g., Process Condensate Vessels located in the RLD System are designated V45028A and V45028B, respectively).

### III.10.E.2 Tank System Design and Construction

**III.10.E.2.a** The Permittees will construct the tank systems identified in Permit Tables III.10.E.A through D, I, K, M, O, and R as approved/modified pursuant to Permit Condition III.10.E.9., as specified in Operating Unit Group 10, Appendices 8.1 through 8.14, 9.1 through 9.14, 10.1 through 10.14, 11.1 through 11.14, and 13.1 through 13.14 of this

Permit, as approved pursuant to Permit Conditions III.10.E.9.b., III.10.E.9.c., and III.10.E.9.d.

**III.10.E.2.b** The Permittees will construct all secondary containment systems identified in Permit Tables III.10.E.A through D, and I through S, as approved/modified pursuant to Permit Condition III.10.E.9., as specified in Operating Unit Group 10, Appendices 8.2, 8.4 through 8.15, 9.2, 9.4 through 9.14, 9.18, 10.2, 10.4 through 10.14, 10.18, 11.2, 11.4 through 11.14, 11.18, and 13.2, 13.4 through 13.14, and 13.18 of this Permit, as approved pursuant to Permit Conditions III.10.E.9.b., III.10.E.9.c., and III.10.E.9.d.

**III.10.E.2.c** Modifications to approved design, plans, and specifications in Operating Unit Group 10 of this Permit for the WTP Unit Tank Systems will be allowed only in accordance with Permit Conditions III.10.C.2.e. and f., or III.10.C.2.g., III.10.C.9.d, e., and h.

**III.10.E.2.d** The Permittees will maintain construction access to the internal portions of installed tanks with pulse jet mixers until Ecology has provided written approval of the tank system designs for wear allowance pursuant to WAC 173-303-640(3)(a).

**III.10.E.2.d.i** The Permittees will not install the following tanks in the WTP Unit until Ecology has provided written approval of the tank system designs for wear allowance pursuant to WAC 173-303-640(3)(a):

- Plant Wash Vessel, PWD-VSL-00044.
- Acidic Waste Vessel, RLD-VSL-00007.
- Plant Wash and Drains Vessel, RLD-VSL-00008.
- HLW Feed Receipt Vessel, HLP-VSL-00022.
- HLW Lag Storage Vessels, HLP-VSL-00027A and HLP-VSL-00027B.
- HLW Feed Blend Vessel, HLP-VSL-00028.
- Ultrafiltration Feed Preparation Vessels, UFP-VSL-00001A and UFP-VSL-00001B.
- Ultrafiltration Feed Vessels, UFP-VSL-00002A and UFP-VSL-00002B.

**III.10.E.2.d.ii** Except where exempted in writing by Ecology on the basis that wear allowance provisions will not be affected, fabrication and assembly of the following tanks and their internal components will be suspended until Ecology has provided written approval of the tank system designs for wear allowance pursuant to WAC 173-303-640(3)(a).

- HLW Feed Receipt Vessel, HLP-VSL-00022.
- HLW Lag Storage Vessels, HLP-VSL-00027A and HLP-VSL-00027B.
- HLW Feed Blend Vessel, HLP-VSL-00028.
- Ultrafiltration Feed Vessels, UFP-VSL-00002A and UFP-VSL-00002B.

**III.10.E.3 Tank System Installation and Certification**

**III.10.E.3.a** The Permittees must ensure that proper handling procedures are adhered to in order to prevent damage to the system during installation. Prior to covering, enclosing, or placing a new tank system or component in use, an independent, qualified, installation inspector or an independent, qualified, registered professional engineer, either of whom is trained and experienced in the proper installation of tank systems or components, must inspect the system for the presence of any of the following items:

**III.10.E.3.a.i** Weld breaks;

**III.10.E.3.a.ii** Punctures;

**III.10.E.3.a.iii** Scrapes of protective coatings;

**III.10.E.3.a.iv** Cracks;

**III.10.E.3.a.v** Corrosion;

**III.10.E.3.a.vi** Other structural damage or inadequate construction/installation.

All discrepancies must be remedied before the tank system is covered, enclosed, or placed in use [WAC 173-303-640(3)(c)].

**III.10.E.3.b** For tank systems or components that are placed underground and that are back-filled, the Permittees must provide a backfill material that is a non-corrosive, porous, homogeneous substance. The backfill must be installed so that it is placed completely around the tank and compacted to ensure that the tank and piping are fully and uniformly supported [WAC 173-303-640(3)(d)].

**III.10.E.3.c** The Permittees must test for tightness all new tanks and ancillary equipment prior to these components being covered, enclosed, or placed into use. If a tank system is found not to be tight, all repairs necessary to remedy the leak(s) in the system must be performed prior to the tank system being covered, enclosed, or placed in use [WAC 173-303-640(3)(e)].

**III.10.E.3.d** The Permittees must ensure ancillary equipment is supported and protected against physical damage and excessive stress due to settlement, vibration, expansion, or contraction [WAC 173-303-640(3)(f)].

**III.10.E.3.e** The Permittees must provide the type and degree of corrosion protection recommended by an independent corrosion expert, based on the information provided in Operating Unit Group 10, Appendices 8.9, 8.11, 9.9, 9.11, 10.9, 10.11, 11.9, 11.11, and 13.11 of this Permit, as approved pursuant to Permit Conditions III.10.E.9.b.i., III.10.E.9.b.iv., III.10.E.9.b.v., III.10.E.9.c.i., III.10.E.9.c.iv., III.10.E.9.c.v., III.10.E.9.d.i., III.10.E.9.d.iv., and III.10.E.9.d.v. or other corrosion protection if the Ecology believes other corrosion protection is necessary to ensure the integrity of the tank system during use of the tank system. The installation of a corrosion protection system that is field fabricated must be supervised by an independent corrosion expert to ensure proper installation [WAC 173-303-640(3)(g)].

**III.10.E.3.f** Prior to initial receipt of dangerous and/or mixed waste in the WTP Unit, the Permittees will obtain, and keep on file in the WTP Unit operating record, written statements by those persons required to certify the design of the tank system and supervise the installation of the tank system in accordance with the requirements of WAC 173-303-640(3)(b), (c), (d), (e), (f), and (g), attesting that each tank system and corresponding containment system listed in Permit Tables III.10.E.A through D and III.10.E.I through S, as approved/modified pursuant to Permit Condition III.10.E.9., were properly designed and installed, and that repairs, pursuant to WAC 173-303-640(3)(c) and (e) were performed [WAC 173-303-640(3)(a) WAC 173-303-640(3)(h)].

**III.10.E.3.g** The independent tank system installation inspection and subsequent written statements will be certified pursuant to Permit Condition III.10.E.1.d., comply with all requirements of WAC 173-303-640(3)(h) and will consider, but not be limited to, the following tank system installation documentation:

**III.10.E.3.g.i** Field installation report with date of installation;

**III.10.E.3.g.ii** Approved welding procedures;

**III.10.E.3.g.iii** Welder qualifications and certification;

**III.10.E.3.g.iv** Hydro-test reports, as applicable, in accordance with the American Society of Mechanical Engineers Boiler and Pressure Vessel Code, Section VIII, Division 1, American Petroleum Institute (API) Standard 620, or Standard 650 as applicable;

**III.10.E.3.g.v** Tester credentials;

**III.10.E.3.g.vi** Field inspector credentials;

**III.10.E.3.g.vii** Field inspector reports;

**III.10.E.3.g.viii** Field waiver reports; and

**III.10.E.3.g.ix** Non-compliance reports and corrective action (including field waiver reports) and repair reports.

### III.10.E.4 Integrity Assessments

**III.10.E.4.a** The Permittees will ensure periodic integrity assessments are conducted on the WTP Unit Tank Systems listed in Permit Tables III.10.E.A through D, I, K, M, O, and R as approved/modified pursuant to Permit Condition III.10.E.9., over the term of this Permit as specified in WAC 173-303-640(3)(b), following the description of the integrity assessment program and schedule in Operating Unit Group 10, Chapter 6 of this Permit, as approved pursuant to Permit Conditions III.10.E.9.e.i. and III.10.C.5.c. Results of the integrity assessments will be included in the WTP Unit operating record until ten (10) years after post-closure, or corrective action is complete and certified, whichever is later.

**III.10.E.4.b** The Permittees will address problems detected during the tank integrity assessments specified in Permit Condition III.10.E.4.a. following the integrity assessment program in Operating Unit Group 10, Chapter 6 of this Permit, as approved pursuant to Permit Conditions III.10.E.9.e.i. and III.10.C.5.c.

**III.10.E.4.c** The Permittees must immediately and safely remove from service any Tank System or secondary containment system which through an integrity assessment is found to be "unfit for use" as defined in WAC 173-303-040, following Permit Conditions III.10.E.5.i.i through iv., vi., and vii. The affected tank system or secondary containment system must be either repaired or closed in accordance with Permit Condition III.10.E.5.i.v. [WAC 173-303-640(7)(e) and (f), WAC 173-303-640(8)].

### III.10.E.5 Tank Management Practices

**III.10.E.5.a** No dangerous and/or mixed waste will be managed in the WTP Unit Tank System unless the operating conditions, specified under Permit Condition III.10.E.5 are complied with.

**III.10.E.5.b** The Permittees will install and test all process and leak detection system monitoring/instrumentation, as specified in Permit Tables III.10.E.E through H, and S as approved/modified pursuant to Permit Condition III.10.E.9., in accordance with Operating Unit Group 10, Appendices 8.1, 8.2, 8.14, 9.1, 9.2, 9.14, 10.1, 10.2, 10.14,

11.1, 11.2, 11.14, and 13.1, 13.2, and 13.14 of this Permit, as approved pursuant to Permit Conditions III.10.E.9.e.ix. and III.10.E.9.d.x.

**III.10.E.5.c** The Permittees will not place dangerous and/or mixed waste, treatment reagents, or other materials in the WTP Unit Tank System if these substances could cause the tank system to rupture, leak, corrode, or otherwise fail [WAC 173-303-640(5)(a)].

**III.10.E.5.d** The Permittees will operate the WTP Unit Tank System to prevent spills and overflows using the description of controls and practices as required under WAC 173-303-640(5)(b) described in Permit Condition III.10.C.5., and Operating Unit Group 10, Appendices 8.16, 9.18, 10.18, 11.18, and 13.18 of this Permit, as approved pursuant to Permit Condition III.10.E.9.e.iv. [WAC 173-303-640(5)(b), WAC 173-303-806(4)(c)(ix)].

**III.10.E.5.e** For routinely non-accessible WTP Unit Tank Systems, as specified in Operating Unit Group 10, Chapter 4 of this Permit, as updated pursuant to Permit Condition III.10.E.9.e.vi., the Permittees will mark all routinely non-accessible tank system access points with labels or signs to identify the waste contained in the tanks. The label, or sign, must be legible at a distance of at least fifty (50) feet and must bear a legend that identifies the waste in a manner which adequately warns employees, emergency response personnel, and the public of the major risk(s) associated with the waste being stored or treated in the tank system(s). For the purposes of this Permit condition, "routinely non-accessible" means personnel are unable to enter these areas while waste is being managed in them [WAC 173-303-640(5)(d)].

**III.10.E.5.f** For all tank systems not addressed in Permit Condition III.10.E.5.e., the Permittees will mark all these tank systems holding dangerous and/or mixed waste with labels or signs to identify the waste contained in the tank. The labels, or sign, must be legible at a distance of at least fifty (50) feet, and must bear a legend that identifies the waste in a manner which adequately warns employees, emergency response personnel, and the public of the major risk(s) associated with the waste being stored or treated in the tank system(s) [WAC 173-303-640(5)(d)].

**III.10.E.5.g** The Permittees will ensure that the secondary containment systems for the WTP Unit Tank Systems listed in Permit Tables III.10.E.A through D, I, K, M, O, and R as approved/modified pursuant to Permit Condition III.10.E.9., are free of cracks or gaps to prevent any migration of dangerous and/or mixed waste or accumulated liquid out of the system to the soil, ground water, or surface water at any time that waste is in the tank system. Any indication that a crack or gap may exist in the containment systems will be investigated and repaired in accordance with Operating Unit Group 10, Appendices 8.18, 9.18, 10.18, 11.18, and 13.18 of this Permit, as approved pursuant to Permit Condition III.10.E.9.e.v [WAC 173-303-320, WAC 173-303-640(4)(b)(i), WAC 173-303-640(4)(e)(i)(C), WAC 173-303-640(6), and WAC 173-303-806(4)(c)(vii)].

**III.10.E.5.h** An impermeable coating, as specified in Operating Unit Group 10, Appendices 8.4, 8.5, 8.7, 8.9, 8.11, 8.12, 9.4, 9.5, 9.7, 9.9, 9.11, 9.12, 10.4, 10.5, 10.7, 10.9, 10.11, 10.12, 11.4, 11.5, 11.7, 11.9, 11.11, 11.12, and 13.4, 13.5, 13.7, 13.9, 13.11 and 13.12 of this Permit, as approved pursuant to Permit Condition III.10.E.9.b.v., will be maintained for all concrete containment systems and concrete portions of containment systems for each WTP Unit Tank System listed in Permit Tables III.10.E.A through D, I through P, and R through T as approved/modified pursuant to Permit Condition III.10.E.9. Concrete containment systems that do not have a liner and have construction joints, must meet the requirements of WAC 173-303-640(4)(e)(ii)(C) and -806(4)(c)(vii). The coating will

prevent migration of any dangerous and/or mixed waste into the concrete. All coatings will meet the following performance standards:

**III.10.E.5.h.i** The coating must seal the containment surface such that no cracks, seams, or other avenues through which liquid could migrate are present;

**III.10.E.5.h.ii** The coating must be of adequate thickness and strength to withstand the normal operation of equipment and personnel within the given area such that degradation or physical damage to the coating or lining can be identified and remedied before dangerous and/or mixed waste could migrate from the system; and

**III.10.E.5.h.iii** The coating must be compatible with the dangerous and/or mixed waste, treatment reagents, or other materials managed in the containment system [WAC 173-303-640(4)(e)(ii)(D), WAC 173-303-806(4)(c)(vii)].

**III.10.E.5.i** The Permittees will inspect all secondary containment systems for WTP Unit Tank Systems listed in Permit Tables III.10.E.A through D, I through P, and R through T as approved/modified pursuant to Permit Condition III.10.E.9., in accordance with the Inspection Plan specified in Operating Unit Group 10, Chapter 6A of this Permit, as approved pursuant to Permit Conditions III.10.E.9.e.v. and III.10.C.5., and take the following actions if a leak or spill of dangerous and/or mixed waste is detected in these containment systems [WAC 173-303-320, WAC 173-303-640(5)(c), WAC 173-303-640(6), WAC 173-303-640(7), WAC 173-303-806(4)(a)(v)]:

**III.10.E.5.i.i** Immediately and safely stop the flow of dangerous and/or mixed waste into the tank system or secondary containment system, in accordance with procedures based on all applicable safety analysis documentation;

**III.10.E.5.i.ii** Determine the source of the dangerous and/or mixed waste;

**III.10.E.5.i.iii** Remove the waste from the secondary containment area pursuant to WAC 173-303-640(7)(b). The waste removed from containment areas of WTP Unit Tank Systems will be managed as dangerous and/or mixed waste;

**III.10.E.5.i.iv** If the cause of the release was a spill that has not damaged the integrity of the tank system, the Permittees may return the tank system to service pursuant to WAC 173-303-640(7)(e)(ii). In such a case, the Permittees will take action to ensure the incident that caused liquid to enter the containment systems of these tank systems will not reoccur [WAC 173-303-320(3);

**III.10.E.5.i.v** If the source of the dangerous waste and/or mixed waste is determined to be a leak from a primary WTP Unit Tank System, or the system is unfit for use as determined through an integrity assessment or other inspection, the Permittees must comply with the requirements of WAC 173-303-640(7) and take the following actions [WAC 173-303-640(5)(c)]:

A. Close the tank system according to procedures in WAC 173-303-640(7)(e)(i), and Operating Unit Group 10, Chapter 11 of this Permit, as approved pursuant to Permit Condition III.10.C.8.; or

B. Repair and re-certify (in accordance with WAC 173-303-810(13)(a) as modified pursuant to Permit Condition III.10.E.1.d.) the tank system in accordance with Operating Unit Group 10, Appendices 8.18, 9.18, 10.18, 11.18, and 13.18 of this Permit, as approved pursuant to Permit Condition III.10.E.9.e.v. before the tank system is placed back into service [WAC 173-303-640(7)(e) and (f), and WAC 173-303-806(4)(c)(vii)];

**III.10.E.5.i.vi** The Permittees will document in the operating record actions/procedures taken to comply with III.10.E.5.i.i. through v. above in accordance with WAC 173-303-640(6)(d);

**III.10.E.5.i.vii** The Permittees will notify and report releases to the environment to Ecology in accordance with WAC 173-303-640(7)(d).

**III.10.E.5.j** If liquids (e.g., dangerous and/or mixed waste leaks and spills, precipitation, fire water liquids from damaged or broken pipes) cannot be removed from the secondary containment system within twenty-four (24) hours, Ecology will be verbally notified within twenty-four (24) hours of discovery. The notification will provide the information in A, B, and C listed below. The Permittees will provide Ecology with a written demonstration within seven (7) business days, identifying at a minimum [WAC 173-303-640(4)(c)(iv), WAC 173-303-640(7)(b)(ii), WAC 173-303-806(4)(c)(vii)]:

A. Reasons for delayed removal;

B. Measures implemented to ensure continued protection of human health and the environment;

C. Current actions being taken to remove liquids from secondary containment.

**III.10.E.5.k** The Permittees will operate the WTP Unit Tank System in accordance with Operating Unit Group 10, Chapter 4 as updated pursuant to Permit Condition III.10.E.9.e.vi. and Appendices 8.18, 9.18, 10.18, 11.18, and 13.18 of this Permit, as approved pursuant to Permit Condition III.10.E.9.e., and the following:

**III.10.E.5.k.i** The Permittees will operate the WTP Unit Tank System in order to maintain the systems and process parameters listed in Permit Tables III.10.E.E through H, as approved/modified pursuant to Permit Condition III.10.E.9., within the operating trips and operating ranges specified in Permit Tables III.10.E.E through H, and consistent with assumptions and basis which are reflected in Operating Unit Group 10, Appendix, 6.3. as approved pursuant to Permit Condition III.10.C.11.b. [WAC 173-303-815(2)(b)(ii) and WAC 173-303-640(5)(b)]. For the purposes of this permit condition, Operating Unit Group 10, Appendix 6.3 will be superseded by Appendix 6.4 upon its approval pursuant to either Permit Conditions III.10.C.11.c. or III.10.C.11.d.;

**III.10.E.5.k.ii** The Permittees will calibrate/function test the instruments listed on Permit Tables III.10.E.E through H and S in accordance with Operating Unit Group 10, Appendices 8.18, 9.18, 10.18, 11.18, and 13.18 of this Permit, as approved pursuant to Permit Condition III.10.E.9.e.xi.

**III.10.E.5.l** Tank systems that have the potential for formation and accumulation of hydrogen gases must be operated to maintain hydrogen levels below the lower explosive limit [WAC 173-303-815(2)(b)(ii)].

**III.10.E.5.m** For each tank system holding dangerous waste which are acutely or chronically toxic by inhalation, operate the system to prevent escape of vapors, fumes or other emissions into the air [WAC 173-303-640(5)(e), WAC 173-303-806(4)(c)(xii)].

### III.10.E.6 Inspections [WAC 173-303-640(6)]

**III.10.E.6.a** The Permittees will inspect the WTP Unit Tank Systems in accordance with the Inspection Plan in Operating Unit Group 10, Chapter 6A of this Permit, as modified pursuant to Permit Condition III.10.C.5.c.

**III.10.E.6.b** The inspection data for the WTP Unit Tank Systems will be recorded, and the records will be placed in the WTP Unit operating record, in accordance with Permit Condition III.10.C.4.

### III.10.E.7 Recordkeeping (WAC 173-303-380)

For the WTP Unit Tank Systems, the Permittees will record and maintain in the WTP Unit operating record, all monitoring, calibration, recording, maintenance, test data, and inspection data compiled under the conditions of this Permit, in accordance with Permit Conditions III.10.C.4. and III.10.C.5.

### III.10.E.8 Closure

The Permittees will close the WTP Unit Tank Systems in accordance with Operating Unit Group 10, Chapter 11 of this Permit, as approved pursuant to Permit Condition III.10.C.8.

### III.10.E.9 Compliance Schedule

**III.10.E.9.a** All information identified for submittal to Ecology in b. through e. of this compliance schedule must be signed and certified in accordance with requirements in WAC 173-303-810(12), as modified in accordance with Permit Condition III.10.E.1.d. [WAC 173-303-806(4)].

**III.10.E.9.b** The Permittees will submit to Ecology, pursuant to Permit Condition III.10.C.9.f., prior to construction of each secondary containment and leak detection system for the WTP Unit Tank System (per level, per WTP Unit building and outside the WTP Unit buildings) as identified in Permit Tables III.10.E.A through D, J, L, N, P, and S engineering information as specified below, for incorporation into Operating Unit Group 10, Appendices 8.4, 8.5, 8.7, 8.8, 8.9, 8.11, 8.12, 9.4, 9.5, 9.7, 9.8, 9.9, 9.11, 9.12, 10.4, 10.5, 10.7, 10.8, 10.9, 10.11, 11.4, 11.5, 11.7, 11.8, 11.9, 11.11, and 13.4, 13.5, 13.7, 13.8, 13.9 and 13.11 of this Permit. At a minimum, engineering information specified below will show the following as required pursuant to WAC 173-303-640 (the information specified below will include dimensioned engineering drawings and information on sumps and floor drains):

**III.10.E.9.b.i** IQRPE Reports (specific to foundation, secondary containment, and leak detection system) will include review of design drawings, calculations, and other information on which the certification report is based and will include as applicable, but not limited to, review of such information described below. Information (drawings, specifications, etc.) already included in Operating Unit Group 10, Appendices 8.0 through 11.0 of this Permit, may be included in the report by reference and should include drawing and document numbers. IQRPE Reports will be consistent with the information separately provided in Permit Conditions III.10.E.9.b.ii. through ix. below. The IQRPE Report(s) (specific to foundation, secondary containment and leak detection system) for the LAW and HLW buildings (-21 foot elevation only)

will be submitted with the first IQRPE Report for tanks, identified in Permit Condition III.10.E.9.c.i. [WAC 173-303-640(3)(a), WAC 173-303-806(4)(c)(i)];

**III.10.E.9.b.ii** Design drawings (General Arrangement Drawings in plan ) and specifications for the foundation, secondary containment, including, liner installation details, and leak detection methodology [Note: leak detection systems for areas where daily, direct, or remote visual inspection is not feasible, will be continuous in accordance with WAC 173-303-640(4)(e)(iii)(C)]. These items should show the dimensions, volume calculations, and location of the secondary containment system, and should include items such as floor/pipe slopes to sumps, tanks, floor drains [WAC 173-303-640(4)(b) through (f), WAC 173-303-640(3)(a), WAC 173-303-806(4)(c)(i)];

**III.10.E.9.b.iii** The Permittees will provide the design criteria (references to codes and standards, load definitions, and load combinations, materials of construction, and analysis/design methodology) and typical design details for the support of the secondary containment system. This information will demonstrate the foundation will be capable of providing support to the secondary containment system, resistance to pressure gradients above and below the system, and capable of preventing failure due to settlement, compression, or uplift [WAC 173-303-640(4)(c)(ii), WAC 173-303-806(4)(c)(vii)];

**III.10.E.9.b.iv** A description of materials and equipment used to provide corrosion protection for external metal components in contact with soil, including factors affecting the potential for corrosion as required under WAC 173-303-640(3)(a)(iii)(B) [WAC 173-303-806(4)(c)(v)];

**III.10.E.9.b.v** Secondary containment/foundation and leak detection system materials selection documentation (including, but not limited to, concrete coatings and water stops, and liner materials as applicable) [WAC 173-303-806(4)(c)(i)];

**III.10.E.9.b.vi** Detailed description of how the secondary containment for each tank system will be installed in compliance with WAC 173-303-640(3)(c) [WAC 173-303-806(4)(c)(vi)];

**III.10.E.9.b.vii** Submit Permit Tables III.10.E.J, L, N, P, and S completed to provide for all secondary containment sumps and floor drains, the information as specified in each column heading, consistent with information to be provided in Permit Conditions III.10.E.9.b.i. through vi. above;

**III.10.E.9.b.viii** Documentation that secondary containment and leak detection systems will not accumulate hydrogen gas levels above the lower explosive limit and in accordance with Appendix 7.15 for incorporation into the Administrative Record [WAC 173-303-340].

**III.10.E.9.b.ix** A detailed description of how tank system design provides access for conducting future tank integrity assessments [WAC 173-303-640(3)(b), WAC 173-303-806(4)(c)(vi)];

**III.10.E.9.c** The Permittees will submit to Ecology, pursuant to Permit Condition III.10.C.9.f., prior to installation of each tank as identified in Permit Tables III.10.E.A through D, and I, K, M, O, and R engineering information as specified below, for incorporation into Operating Unit Group 10, Appendices 8.1 through 8.9, 8.11 through 8.14, 9.1 through 9.9, 9.11 through 9.14, 10.1 through 10.9, 10.11 through 10.14, 11.1 through 11.9, 11.11 through 11.14, 13.1 through 13.9, and 13.11 through 13.14 of this Permit. Tanks will include primary sumps. At a minimum, engineering information specified below will show the

following as required pursuant to WAC 173-303-640 (the information specified below will include dimensioned engineering drawings):

**III.10.E.9.c.i** IQRPE Reports (specific to tanks) will include review of design drawings, calculations, and other information on which the certification report is based and will include as applicable, but not limited to, review of such information described below. Information (drawings, specifications, etc.) already included in Operating Unit Group 10, Appendices 8.0 through 13.0 of this Permit, may be included in the report by reference and should include drawing and document numbers. The IQRPE Reports will be consistent with the information separately provided in Permit Conditions III.10.E.9.c.ii. through xii. below and the IQRPE Report specified in Permit Condition III.10.E.9.b.i. [WAC 173-303-640(3)(a), WAC 173-303-806(4)(c)(i)];

**III.10.E.9.c.ii** Design drawings (General Arrangement Drawings in plan , Process Flow Diagrams, Piping and Instrumentation Diagrams [including pressure control systems], Mechanical Drawings) and specifications, and other information, specific to tanks (to show location and physical attributes of each tank) [WAC 173-303-640(3)(a), WAC 173-303-806(4)(c)(i) through (iv)];

**III.10.E.9.c.iii** The Permittees will provide the design criteria (references to codes and standards, load definitions, and load combinations, materials of construction, and analysis/design methodology) and typical design details for the support of the tank(s). Structural support calculations specific to off-specification, non-standard, and field fabricated tanks will be submitted for incorporation into the Administrative Record [WAC 173-303-640(3)(a), WAC 173-303-806(4)(c)(i)];

**III.10.E.9.c.iv** A description of materials and equipment used to provide corrosion protection for external metal components in contact with water, including factors affecting the potential for corrosion as required under WAC 173-303-640(3)(a)(iii)(B) [WAC 173-303-806(4)(c)(v)];

**III.10.E.9.c.v** Tank materials selection documentation (e.g., physical and chemical tolerances) [WAC 173-303-640(3)(a), WAC 173-303-806(4)(c)(i)];

**III.10.E.9.c.vi** Tank vendor information (including, but not limited to required performance warranties, as available), consistent with information submitted under ii. above, will be submitted for incorporation into the Administrative Record [WAC 173-303-640, and WAC 173-303-806(4)(c)];

**III.10.E.9.c.vii** System Descriptions related to tanks will be submitted for incorporation into the Administrative Record;

**III.10.E.9.c.viii** Mass balance for each projected operating condition, including assumptions and formulas used to complete the mass balance, so that they can be independently verified, and will be submitted for incorporation into the Administrative Record;

**III.10.E.9.c.ix** A detailed description of how the tanks will be installed in compliance with WAC 173-303-640(3)(c), (d), and (e) [WAC 173-303-806(4)(c)(vi)];

**III.10.E.9.c.x** Submit Permit Tables III.10.E.I, K, M, O, and R completed to provide for all primary containment sumps and floor drains, the information as specified in each column

heading, consistent with information to be provided in Permit Conditions III.10.E.9.c.i. through ix.;

**III.10.E.9.c.xi** Documentation that tanks are designed to prevent the accumulation of hydrogen gas levels above the lower explosive limit for incorporation into the Administrative Record [WAC 173-303-340];

**III.10.E.9.c.xii** Documentation that tanks are designed to prevent escape of vapors and emissions of acutely or chronically toxic (upon inhalation) Extremely Hazardous Waste limit and in accordance with Appendix 7.15 for incorporation into the Administrative Record [WAC 173-303-640(5)(e), WAC 173-303-806(4)(c)(xii)];

**III.10.E.9.d** The Permittees will submit to Ecology, pursuant to Permit Condition III.10.C.9.f., prior to installation of ancillary equipment for each tank system, as identified in Permit Tables III.10.E.A, through D, I through P, and R through T not addressed in Permit Condition III.10.E.9.c., engineering information as specified below, for incorporation into Operating Unit Group 10, Appendices 8.1 through 8.9, 8.11 through 8.14, 9.1 through 9.9, 9.11 through 9.14, 10.1 through 10.9, 10.11 through 10.14, 11.1 through 11.9,11.11 through 11.14, 13.1 through 13.9, and 13.11 through 13.14 of this Permit. At a minimum, engineering information specified below will show the following as required pursuant to WAC 173-303-640 (the information specified below will include dimensioned engineering drawings):

**III.10.E.9.d.i** IQRPE Reports (specific to ancillary equipment) will include a review of design drawings, calculations, and other information as applicable, on which the certification report is based. The reports will include, but not be limited to, review of such information described below. Information (drawings, specifications, etc.) already included in Operating Unit Group 10, Appendix 8.0 through 13.0 of this Permit, may be included in the report by reference and should include drawing and document numbers. The IQRPE Reports will be consistent with the information provided separately in Permit Conditions III.10.E.9.d.ii. through xiii. below and the IQRPE Reports specified in Permit Conditions III.10.E.9.b and III.10.E.9.c. [WAC 173-303-640(3)(a), WAC 173-303-806(4)(c)(i)];

**III.10.E.9.d.ii** Design drawings (Process Flow Diagrams, Piping and Instrumentation Diagrams [including pressure control systems], etc.) specifications (including required performance warranties), and other information specific to ancillary equipment (these drawings should include all equipment such as pipe, valves, fittings, pumps, instruments, etc.) [WAC 173-303-640(3)(a), WAC 173-303-806(4)(c)(i), (iii), (iv)];

**III.10.E.9.d.iii** The Permittees will provide the design criteria (references to codes and standards, load definitions, and load combinations, materials of construction, and analysis/design methodology) and typical design details for the support of the ancillary equipment [WAC 173-303-640(3)(a), WAC 173-303-640(3)(f), WAC 173-303-806(4)(c)(i)];

**III.10.E.9.d.iv** A description of materials and equipment used to provide corrosion protection for external metal components in contact with soil and water, including factors affecting the potential for corrosion as required under WAC 173-303-640(3)(a)(iii)(B) [WAC 173-303-806(4)(c)(v)];

**III.10.E.9.d.v** Materials selection documentation for ancillary equipment (e.g., physical and chemical tolerances) [WAC 173-303-640(3)(a), WAC 173-303-806(4)(c)(i)];

**III.10.E.9.d.vi** Vendor information, consistent with information submitted under ii. above, will be submitted for incorporation into the Administrative Record [WAC 173-303-640, and WAC 173-303-806(4)(c)];

**III.10.E.9.d.vii** Tank, ancillary equipment, and leak detection system instrument control logic narrative description (e.g., descriptions of fail-safe conditions, etc.);

**III.10.E.9.d.viii** System Descriptions related to ancillary equipment and system descriptions related to leak detection systems, , for incorporation into the Administrative Record;

**III.10.E.9.d.ix** A detailed description of how the ancillary equipment will be installed and tested [WAC 173-303-640(3)(c) through (e), WAC 173-303-640(4)(b) and (c), and WAC 173-303-806(4)(c)(vi)];

**III.10.E.9.d.x** For process monitoring, control, and leak detection system instrumentation for the WTP Unit Tank System as identified in Permit Tables III.10.E.E through H, and R through S, a detailed description of how the process monitoring, control, and leak detection system instrumentation will be installed and tested [WAC 173-303-640(3)(c) through (e), WAC 173-303-640(4)(b) and (c), WAC 173-303-806(4)(c)(vi)];

**III.10.E.9.d.xi** Mass balance for projected normal operating condition used in developing the process and instrumentation diagrams, including assumptions and formulas used to complete the mass balance, so that they can be independently verified, for incorporation into the Administrative Record;

**III.10.E.9.d.xii** Documentation that ancillary equipment is designed to prevent the accumulation of hydrogen gas levels above the lower explosive limit for incorporation into the Administrative Record [WAC 173-303-340].

**III.10.E.9.d.xiii** Leak detection system documentation (e.g. vendor information, etc.) consistent with information submitted under Permit Condition III.10.E.9.c.ii. and Permit Conditions III.10.E.9.d.ii., vii., viii. and x. above, will be submitted for incorporation into the Administrative Record.

**III.10.E.9.e** Prior to initial receipt of dangerous and/or mixed waste in the WTP Unit, the Permittees will submit to Ecology, pursuant to Permit Condition III.10.C.9.f., the following as specified below for incorporation into Operating Unit Group 10, Appendices 8.18, 9.18, 10.18, 11.18, and 13.18 of this Permit, except Permit Condition III.10.E.9.e.v., which will be incorporated into Operating Unit Group 10, Chapter 6 of this Permit. All information provided under this permit condition must be consistent with information provided pursuant to Permit Conditions III.10.E.9.b., c., d., and e., III.10.C.3.e., and III.10.C.11.b., as approved by Ecology.

**III.10.E.9.e.i** Integrity assessment program and schedule for all WTP Unit tanks will address the conducting of periodic integrity assessments on all WTP Unit tanks over the life of the tank, in accordance with III.10.E.9.b.ix. and WAC 173-303-640(3)(b), and descriptions of procedures for addressing problems detected during integrity assessments. The schedule must be based on past integrity assessments, age of the tank system, materials of construction, characteristics of the waste, and any other relevant factors [WAC 173-303-640(3)(b), WAC 173-303-806(4)(c)(vi)];

**III.10.E.9.e.ii** Detailed plans and descriptions, demonstrating the leak detection system is operated so that it will detect the failure of either the primary or secondary containment structure or the presence of any release of dangerous and/or mixed waste, or accumulated liquid in the secondary containment system within twenty-four (24)

hours [WAC 173-303-640(4)(c)(iii)]. Detection of a leak of at least 0.1 gallons per hour within twenty-four (24) hours is defined as being able to detect a leak within twenty-four (24) hours. Any exceptions to this criteria must be approved by Ecology [WAC 173-303-640(4)(c)(iii), WAC 173-303-806(4)(c)(vii)];

A. Dangerous waste pipe penetrations that require a penetration seal in accordance with the International Building Code (IBC) and DOE-STD-1066, DOE Standard for Fire Protection Design Criteria, or to meet ventilation sealing requirements identified in Table III.10.E.Q, are not required to meet the 0.1 gallons per hour within twenty-four (24) hours leak detection rate for those sections of piping that are in contact with approved silicone or equivalent low-permeability seal material.

B. Piping on either side of the penetration seal must meet the requirements of III.10.E.9.e.ii.

C. Revisions (including additions or deletions to Table III.10.E.Q will be submitted to Ecology for review and approval pursuant to Conditions III.10.C.2.e and III.10.C.2.f. Addition of penetration seal locations to Table III.10.E.Q. will be approved by Ecology prior to installation of the penetration seals.

**Table III.10.E.Q Tank System Penetration Seal Locations**

| Facility | Room No | Orientation | Discipline | Penetration Sequence No |
|---|---|---|---|---|
| Reserved | Reserved | Reserved | Reserved | Reserved |

**III.10.E.9.e.iii** Detailed operational plans and descriptions, demonstrating that spilled or leaked waste and accumulated liquids can be removed from the secondary containment system within twenty-four (24) hours [WAC 173-303-806(4)(c)(vii)];

**III.10.E.9.e.iv** Descriptions of operational procedures demonstrating appropriate controls and practices are in place to prevent spills and overflows from tanks or containment systems in compliance with WAC 173-303-640(5)(b)(i) through (iii) [WAC 173-303-640(5)(b), WAC 173-303-806(4)(c)(ix)];

**III.10.E.9.e.v** Description of procedures for investigation and repair of tank systems [WAC 173-303-320, WAC 173-303-640(6), WAC 173-303-640(7)(e) and (f), WAC 173-303-806(4)(a)(v), WAC 173-303-806(4)(c)(vii)];

**III.10.E.9.e.vi** Updated Chapter 4, Narrative Descriptions, Tables and Figures as identified in Permit Tables III.10.E.A through D (as modified pursuant to Permit Condition III.10.E.9.e.xii.) and updated to identify routinely non-accessible tank systems;

**III.10.E.9.e.vii** Description of procedures for management of ignitable and reactive, and incompatible dangerous and/or mixed waste in accordance with WAC 173-303-640(9) and (10) [WAC 173-303-806(4)(c)(x)].

**III.10.E.9.e.viii** A description of the tracking system used to track dangerous and/or mixed waste throughout the WTP Unit Tank System, pursuant to WAC 173-303-380.

**III.10.E.9.e.ix** Permit Tables III.10.E.E through H, and R through S, will be completed for WTP Unit Tank System process and leak detection system monitors and instruments (to include but not limited to: instruments and monitors measuring and/or controlling flow, pressure, temperature, density, pH, level, humidity, and emission) to provide

the information as specified in each column heading. Process and leak detection system monitors and instruments for critical systems as specified in Operating Unit Group 10, Appendix 2.0 and as updated pursuant to Permit Condition III.10.C.9.b. and for operating parameters as required to comply with Permit Condition III.10.C.3.e.iii. will be addressed. Process monitors and instruments for non-waste management operations (e.g., utilities, raw chemical storage, non-contact cooling waters, etc.) are excluded from this permit condition.

**III.10.E.9.e.x** Supporting documentation for operating trips and expected operating range as specified in Permit Tables III.10.E.E through H, and R through S, as approved pursuant to Permit Condition III.10.E.9.e.ix.

**III.10.E.9.e.xi** Documentation of process and leak detection instruments and monitors (as listed in Permit Tables III.10.E.E through H, and R through S) for the WTP Unit Tank Systems are to include but not be limited to the following:

A. Procurement specifications.

B. Location used.

C. Range, precision, and accuracy.

D. Detailed descriptions of calibration/functionality test procedures (e.g., method number [ASTM]) or provide a copy of manufacturer's recommended calibration procedures.

E. Calibration/functionality test, inspection, and routine maintenance schedules and checklists, including justification for calibration, inspection and maintenance frequencies, criteria for identifying instruments found to be significantly out of calibration, and corrective action to be taken for instruments found to be significantly out of calibration (e.g., increasing frequency of calibration, instrument replacement, etc.).

F. Equipment instrument control logic narrative description (e.g., descriptions of failsafe conditions, etc.), as identified in Permit Tables III.10.E.E through H, and R through S, not addressed in Permit Condition III.10.E.9.d.

**III.10.E.9.e.xii** Permit Tables III.10.E.A through D, and R amended as follows:

A. Under column 1, update and complete list of dangerous and/or mixed waste tank systems, including plant items that comprise each system (listed by item number).

B. Under column 2, update and complete system designations.

C. Under column 3, replace the 'reserved' with the Operating Unit Group 10, Appendices 8.0, 9.0, 10.0, and 11.0, subsections specific to tank systems as listed in column 1.

D. Under column 4, update and complete list of narrative description tables and figures.

E. Under column 5, update and complete maximum capacity, for each tank.

**III.10.E.9.e.xiii** Permit Tables III.10.E.I, K, M, O, and S amended as follows:

A. Under column 1, replace the 'reserved' with the updated and complete list of sump numbers and room location.

B. Under column 2, replace the 'reserved' with the updated and complete maximum sump capacities in gallons.

C. Under column 3, replace the ‘reserved’ with the updated and complete sump dimensions and materials of construction.

D. Under column 4, replace the ‘reserved’ with the updated and complete list of engineering descriptions (drawing numbers, specifications, etc.).

**Table III.10.E.A – Pretreatment Plant Tank Systems Description**

| Dangerous and/or Mixed Waste Tank Systems Name | System Designation | Engineering Description (Drawing Nos., Specifications Nos., etc.) | Narrative Description, Tables & Figures | Maximum Capacity (gallons) |
|---|---|---|---|---|
| **Waste Feed Receipt Process System**<br><br>FRP-VSL-00002A (Waste Feed Receipt Vessel)<br><br>FRP-VSL-00002B (Waste Feed Receipt Vessel)<br><br>FRP-VSL-00002C (Waste Feed Receipt Vessel)<br><br>FRP-VSL-00002D (Waste Feed Receipt Vessel) | FRP | **24590-PTF**<br>-M2-FRP-P0001, Rev 2<br>-M2-FRP-P0002, Rev 2<br>-M2-FRP-P0003, Rev 2<br>-M2-FRP-P0004, Rev 4<br>-M5-V17T-00003, Rev 2<br>-M6-FRP-00001001, Rev 0<br>-M6-FRP-00001002, Rev 0<br>-M6-FRP-00002001, Rev 0<br>-M6-FRP-00002002, Rev 0<br>-M6-FRP-00003001, Rev 0<br>-M6-FRP-00003002, Rev 0<br>-M6-FRP-00003003, Rev 0<br>-M6-FRP-00003004, Rev 0<br>-M6-FRP-00003005, Rev 0<br>-M6-FRP-00005001, Rev 0<br>-M6-FRP-00005002, Rev 0<br>-M6-FRP-00005003, Rev 0<br>-M6-FRP-00005004, Rev 0<br>-M6-FRP-00005005, Rev 0<br>-M6-FRP-00005006, Rev 0<br>-M6-FRP-00005007, Rev 0<br>-M6-FRP-00005008, Rev 0<br>-M6-FRP-00006001, Rev 0<br>-M6-FRP-00006002, Rev 0 | Section 4D.2.1; Tables 4D-1 and 4D-3; and Figures 4A-1, 4A-2, and 4A-2A of Operating Unit Group 10, Chapter 4 of this Permit. | FRP-VSL-00002A = 472,900<br><br>FRP-VSL-00002B = 472,900<br><br>FRP-VSL-00002C = 472,900<br><br>FRP-VSL-00002D = 472,900 |

**Table III.10.E.A – Pretreatment Plant Tank Systems Description**

| Dangerous and/or Mixed Waste Tank Systems Name | System Designation | Engineering Description (Drawing Nos., Specifications Nos., etc.) | Narrative Description, Tables & Figures | Maximum Capacity (gallons) |
|---|---|---|---|---|
| | | -M6-FRP-00006003, Rev 0<br>-M6-FRP-00006004, Rev 0<br>-M6-FRP-00006005, Rev 0<br>-M6-FRP-00006006, Rev 0<br>-M6-FRP-00006007, Rev 0<br>-M6-FRP-00006008, Rev 0<br>-M6-FRP-00007001, Rev 0<br>-M6-FRP-00007002, Rev 0<br>-M6-FRP-00007003, Rev 0<br>-M6-FRP-00007004, Rev 0<br>-M6-FRP-00007005, Rev 0<br>-M6-FRP-00007006, Rev 0<br>-M6-FRP-00007007, Rev 0<br>-M6-FRP-00007008, Rev 0<br>-M6-FRP-00008001, Rev 0<br>-M6-FRP-00008002, Rev 0<br>-M6-FRP-00008003, Rev 0<br>-M6-FRP-00008004, Rev 0<br>-M6-FRP-00008005, Rev 0<br>-M6-FRP-00008006, Rev 0<br>-M6-FRP-00008007, Rev 0<br>-M6-FRP-00009001, Rev 0<br>-M6-FRP-00010001, Rev 0<br>-M6-FRP-00020001, Rev 0<br>-M6-FRP-00020002, Rev 0 | | |

**Table III.10.E.A – Pretreatment Plant Tank Systems Description**

| Dangerous and/or Mixed Waste Tank Systems Name | System Designation | Engineering Description (Drawing Nos., Specifications Nos., etc.) | Narrative Description, Tables & Figures | Maximum Capacity (gallons) |
|---|---|---|---|---|
| | | -M6-FRP-00020003, Rev 0<br>-M6-FRP-00020004, Rev 0<br>-M6-FRP-00020005, Rev 0<br>-M6-FRP-00020006, Rev 0<br>-M6-FRP-00020007, Rev 0<br>-MVD-FRP-00005, Rev 12<br>-MVD-FRP-00006, Rev 12<br>-MVD-FRP-00007, Rev 12<br>-MVD-FRP-00008, Rev 12<br>-N1D-FRP-00001, Rev 7<br>-P1-P01T-00001, Rev 8<br>-P1-P01T-00002, Rev 7<br><br>**24590-WTP**<br>-3PS-G000-T0002, Rev 9<br>-3PS-MV00-T0001, Rev 5<br>-3PS-MV00-T0002, Rev 3<br>-3PS-MV00-T0003, Rev 3 | | |
| **Waste Feed Evaporation Process System**<br><br>FEP-VSL-00005 (Waste Feed Evaporator Condensate Vessel) | FEP | **24590-PTF**<br>-3PS-MEVV-T0001, Rev 3<br>-M5-V17T-00004001, Rev 3<br>-M6-FEP-00001001, Rev 1<br>-M6-FEP-00001002, Rev 0<br>-M6-FEP-00001003, Rev 0<br>-M6-FEP-00001004, Rev 0 | Section 4D.2.2; Tables 4D-1 and 4D-3; and Figures 4A-1, 4A-2, and 4A-2A of Operating Unit Group 10, Chapter 4 of this Permit. | FEP-VSL-00005 = 5,022<br><br>FEP-VSL-00017A = 85,496<br><br>FEP-VSL-00017B = 85,496 |

**Table III.10.E.A – Pretreatment Plant Tank Systems Description**

| Dangerous and/or Mixed Waste Tank Systems Name | System Designation | Engineering Description (Drawing Nos., Specifications Nos., etc.) | Narrative Description, Tables & Figures | Maximum Capacity (gallons) |
|---|---|---|---|---|
| FEP-VSL-00017A (Waste Feed Evaporator Feed Vessel)<br><br>FEP-VSL-00017B (Waste Feed Evaporator Feed Vessel) | | -M6-FEP-00003001, Rev 0<br>-M6-FEP-00003002, Rev 0<br>-M6-FEP-00006001, Rev 1<br>-M6-FEP-00006002, Rev 1<br>-M6-FEP-00006003, Rev 1<br>-M6-FEP-00006004, Rev 1<br>-M6-FEP-00006005, Rev 0<br>-M6-FEP-00007001, Rev 1<br>-M6-FEP-00007002, Rev 1<br>-M6-FEP-00007003, Rev 1<br>-M6-FEP-00007004, Rev 1<br>-M6-FEP-00007005, Rev 0<br>-M6-FEP-00008001, Rev 0<br>-M6-FEP-00008002, Rev 0<br>-MVD-FEP-P0001, Rev 2<br>-MVD-FEP-P0002, Rev 2<br>-MVD-FEP-00003, Rev 1<br>-MV-FEP-P0001, Rev 0<br>-MV-FEP-P0002, Rev 0<br>-N1D-FEP-00002, Rev 6<br>-N1D-FEP-P0003, Rev 1<br>-P1-P01T-00001, Rev 8<br>-P1-P01T-P0002, Rev 7<br>-P1-P01T-00003, Rev. 4 | | |

**Table III.10.E.A – Pretreatment Plant Tank Systems Description**

| Dangerous and/or Mixed Waste Tank Systems Name | System Designation | Engineering Description (Drawing Nos., Specifications Nos., etc.) | Narrative Description, Tables & Figures | Maximum Capacity (gallons) |
|---|---|---|---|---|
| | | **24590-WTP**<br>-3PS-G000-T0002, Rev 9<br>-3PS-MV00-T0001, Rev 5<br>-3PS-MV00-T0002, Rev 3<br>-3PS-MV00-T0003, Rev 3 | | |
| **Ultrafiltration Process System**<br><br>UFP-VSL-00001A (Ultrafiltration Feed Preparation Vessel)<br><br>UFP-VSL-00001B (Ultrafiltration Feed Preparation Vessel)<br><br>UFP-VSL-00002A (Ultrafiltration Feed Vessel)<br><br>UFP-VSL-00002B (Ultrafiltration Feed Vessel)<br><br>UFP-VSL-00062A (Ultrafilter Permeate Collection Vessel)<br><br>UFP-VSL-00062B (Ultrafilter Permeate Collection Vessel) | UFP | **24590-PTF**<br>-M5-V17T-00009, Rev 2<br>-M5-V17T-00011, Rev 2<br>-M6-UFP-00001001, Rev 0<br>-M6-UFP-00001002, Rev 0<br>-M6-UFP-00001003, Rev 0<br>-M6-UFP-00001004, Rev 0<br>-M6-UFP-00001005, Rev 0<br>-M6-UFP-00001006, Rev 0<br>-M6-UFP-00001007, Rev 0<br>-M6-UFP-00002001, Rev 0<br>-M6-UFP-00002002, Rev 0<br>-M6-UFP-00002003, Rev 0<br>-M6-UFP-00002004, Rev 0<br>-M6-UFP-00002005, Rev 0<br>-M6-UFP-00002006, Rev 0<br>-M6-UFP-00002007, Rev 1<br>-M6-UFP-00002008, Rev 0<br>-M6-UFP-00003001, Rev 0<br>-M6-UFP-00003002, Rev 0 | Section 4D.2.3; Tables 4D-1 and 4D-3; and Figures 4A-1, 4A-2 and 4A-2A of Operating Unit Group 10, Chapter 4 of this Permit. | UFP-VSL-00001A = 75,594<br><br>UFP-VSL-00001B = 75,594<br><br>UFP-VSL-00002A = 39,629<br><br>UFP-VSL-00002B = 40,378<br><br>UFP-VSL-00062A = 34,700<br><br>UFP-VSL-00062B = 34,700<br><br>UFP-VSL-00062C = 34,700<br><br>UFP-FILT-00001A = 474<br><br>UFP-FILT-00001B = 474<br><br>UPF-FILT-00002A = 474 |

**Table III.10.E.A – Pretreatment Plant Tank Systems Description**

| Dangerous and/or Mixed Waste Tank Systems Name | System Designation | Engineering Description (Drawing Nos., Specifications Nos., etc.) | Narrative Description, Tables & Figures | Maximum Capacity (gallons) |
|---|---|---|---|---|
| UFP-VSL-00062C (Ultrafilter Permeate Collection Vessel)<br><br>UFP-FILT-00001A (Ultrafilter)<br><br>UFP-FILT-00001B (Ultrafilter)<br><br>UFP-FILT-00002A (Ultrafilter)<br><br>UFP-FILT-00002B (Ultrafilter)<br><br>UFP-FILT-00003A (Ultrafilter)<br><br>UFP-FILT-00003B (Ultrafilter)<br><br>UFP-FILT-00004A (Ultrafilter)<br><br>UFP-FILT-00004B (Ultrafilter)<br><br>UFP-FILT-00005A (Ultrafilter)<br><br>UFP-FILT-00005B (Ultrafilter) | | -M6-UFP-00003003, Rev 0<br>-M6-UFP-00003004, Rev 0<br>-M6-UFP-00003005, Rev 0<br>-M6-UFP-00003006, Rev 0<br>-M6-UFP-00003007, Rev 1<br>-M6-UFP-00003008, Rev 0<br>-M6-UFP-00004001, Rev 1<br>-M6-UFP-00004002, Rev 1<br>-M6-UFP-00004003, Rev 1<br>-M6-UFP-00005001, Rev 0<br>-M6-UFP-00005002, Rev 0<br>-M6-UFP-00005003, Rev 0<br>-M6-UFP-00005004, Rev 0<br>-M6-UFP-00005005, Rev 0<br>-M6-UFP-00005006, Rev 0<br>-M6-UFP-00005007, Rev 0<br>-M6-UFP-00006001, Rev 0<br>-M6-UFP-00006002, Rev 0<br>-M6-UFP-00006003, Rev 0<br>-M6-UFP-00006004, Rev 0<br>-M6-UFP-00006005, Rev 0<br>-M6-UFP-00006006, Rev 0<br>-M6-UFP-00006007, Rev 0<br>-M6-UFP-00007001, Rev 1<br>-M6-UFP-00007002, Rev 1 | | UPF-FILT-00002B = 474<br><br>UPF-FILT-00003A = 474<br><br>UPF-FILT-00003B = 474<br><br>UPF-FILT-00004A = 380<br><br>UPF-FILT-00004B = 380<br><br>UPF-FILT-00005A = 380<br><br>UPF-FILT-00005B = 380 |

**Table III.10.E.A – Pretreatment Plant Tank Systems Description**

| Dangerous and/or Mixed Waste Tank Systems Name | System Designation | Engineering Description (Drawing Nos., Specifications Nos., etc.) | Narrative Description, Tables & Figures | Maximum Capacity (gallons) |
|---|---|---|---|---|
| | | -M6-UFP-00007003, Rev 1<br>-M6-UFP-00007004, Rev 1<br>-M6-UFP-00007005, Rev 1<br>-M6-UFP-00007006, Rev 1<br>-M6-UFP-00007007, Rev 1<br>-M6-UFP-00009001, Rev 0<br>-M6-UFP-00009002, Rev 0<br>-M6-UFP-00009003, Rev 0<br>-M6-UFP-00009004, Rev 0<br>-M6-UFP-00009005, Rev 0<br>-M6-UFP-00009006, Rev 0<br>-M6-UFP-00010001, Rev 0<br>-M6-UFP-00010002, Rev 0<br>-M6-UFP-00010003, Rev 0<br>-M6-UFP-00010004, Rev 0<br>-M6-UFP-00010005, Rev 0<br>-M6-UFP-00010006, Rev 0<br>-M6-UFP-00010007, Rev 0<br>-M6-UFP-00011001, Rev 0<br>-M6-UFP-00011002, Rev 0<br>-M6-UFP-00011003, Rev 0<br>-M6-UFP-00011004, Rev 0<br>-M6-UFP-00011005, Rev 0<br>-M6-UFP-00015001, Rev 0<br>-M6-UFP-00015002, Rev 0 | | |

**Table III.10.E.A – Pretreatment Plant Tank Systems Description**

| Dangerous and/or Mixed Waste Tank Systems Name | System Designation | Engineering Description (Drawing Nos., Specifications Nos., etc.) | Narrative Description, Tables & Figures | Maximum Capacity (gallons) |
|---|---|---|---|---|
| | | -M6-UFP-00016001, Rev 0<br>-M6-UFP-00017001, Rev 0<br>-M6-UFP-00021001, Rev 0<br>-M6-UFP-00021002, Rev 0<br>-M6-UFP-00022001, Rev 0<br>-M6-UFP-00022002, Rev 0<br>-M6-UFP-00027001, Rev 0<br>-M6-UFP-00027002, Rev 0<br>-M6-UFP-00027003, Rev 0<br>-M6-UFP-00027004, Rev 0<br>-M6-UFP-00027005, Rev 0<br>-M6-UFP-00027006, Rev 0<br>-M6-UFP-00027007, Rev 0<br>-MLD-UFP-P0007, Rev 1<br>-MVD-UFP-00001, Rev 12<br>-MVD-UFP-00014, Rev 11<br>-MVD-UFP-00015, Rev 11<br>-MVD-UFP-00002, Rev 12<br>-MVD-UFP-00005. Rev 11<br>-MVD-UFP-00006, Rev 11<br>-MVD-UFP-00007, Rev 11<br>-MV-UFP-00001001, Rev 1<br>-MV-UFP-00001002, Rev 1<br>-MV-UFP-00001003, Rev 1<br>-MV-UFP-00002001, Rev 1 | | |

**Table III.10.E.A – Pretreatment Plant Tank Systems Description**

| Dangerous and/or Mixed Waste Tank Systems Name | System Designation | Engineering Description (Drawing Nos., Specifications Nos., etc.) | Narrative Description, Tables & Figures | Maximum Capacity (gallons) |
|---|---|---|---|---|
| | | -MV-UFP-00002002, Rev 1<br>-MV-UFP-00002003, Rev 1<br>-MV-UFP-00003, Rev 6<br>-MV-UFP-00004, Rev 6<br>-MV-UFP-P0005, Rev 0<br>-MV-UFP-P0006, Rev 0<br>-MV-UFP-P0007, Rev 0<br>-MV-UFP-00016, Rev 3<br>-MV-UFP-00017, Rev 3<br>-MV-UFP-00018, Rev 3<br>-MV-UFP-00028, Rev 1<br>-MV-UFP-00029, Rev 1<br>-MV-UFP-00030, Rev 1<br>-MV-UFP-00031, Rev 1<br>-N1D-UFP-P0001, Rev 2<br>-N1D-UFP-P0002, Rev 2<br>-N1D-UFP-00003, Rev 5<br>-N1D-UFP-P0004, Rev 3<br>-N1D-UFP-P0005, Rev 2<br>-N1D-UFP-P0008, Rev 2<br>-N1D-UFP-00009, Rev 2<br>-P1-P01T-00001, Rev 8<br><br>**24590-WTP**<br>-3PS-G000-T0002, Rev 9 | | |

**Table III.10.E.A – Pretreatment Plant Tank Systems Description**

| Dangerous and/or Mixed Waste Tank Systems Name | System Designation | Engineering Description (Drawing Nos., Specifications Nos., etc.) | Narrative Description, Tables & Figures | Maximum Capacity (gallons) |
|---|---|---|---|---|
| | | -3PS-MV00-T0001, Rev 5<br>-3PS-MV00-T0002, Rev 3<br>-3PS-MV00-T0003, Rev 3 | | |
| **HLW Lag Storage and Feed Blending Process System**<br><br>HLP-VSL-00022 (HLW Feed Receipt Vessel)<br><br>HLP-VSL-00027A (HLW Lag Storage Vessel)<br><br>HLP-VSL-00027B (HLW Lag Storage Vessel)<br><br>HLP-VSL-00028 (HLW Feed Blend Vessel) | HLP | **24590-PTF**<br>-M5-V17T-00007, Rev 2<br>-M5-V17T-00008, Rev 3<br>-M6-HLP-00001001, Rev 0<br>-M6-HLP-00001002, Rev 0<br>-M6-HLP-00001003, Rev 1<br>-M6-HLP-00001004, Rev 0<br>-M6-HLP-00002001, Rev 0<br>-M6-HLP-00002002, Rev 1<br>-M6-HLP-00003001, Rev 0<br>-M6-HLP-00003002, Rev 1<br>-M6-HLP-00003003, Rev 1<br>-M6-HLP-00005001, Rev 0<br>-M6-HLP-00005002, Rev 0<br>-M6-HLP-00005003, Rev 0<br>-M6-HLP-00005004, Rev 0<br>-M6-HLP-00005005, Rev 0<br>-M6-HLP-00005006, Rev 0<br>-M6-HLP-00005007, Rev 0<br>-M6-HLP-00006001, Rev 0<br>-M6-HLP-00006002, Rev 0<br>-M6-HLP-00006003, Rev 0 | Section 4D.2.4; Tables 4D-1 and 4D-3; and Figures 4A-1, 4A-2 and 4A-2A of Operating Unit Group 10, Chapter 4 of this Permit. | HLP-VSL-00022 = 268,800<br><br>HLP-VSL-00027A = 127,260<br><br>HLP-VSL-00027B = 127,260<br><br>HLP-VSL-00028 = 142,200 |

**Table III.10.E.A – Pretreatment Plant Tank Systems Description**

| Dangerous and/or Mixed Waste Tank Systems Name | System Designation | Engineering Description (Drawing Nos., Specifications Nos., etc.) | Narrative Description, Tables & Figures | Maximum Capacity (gallons) |
|---|---|---|---|---|
| | | -M6-HLP-00006004, Rev 0<br>-M6-HLP-00006005, Rev 0<br>-M6-HLP-00006006, Rev 0<br>-M6-HLP-00006007, Rev 0<br>-M6-HLP-00007001, Rev 0<br>-M6-HLP-00007002, Rev 0<br>-M6-HLP-00007003, Rev 0<br>-M6-HLP-00007004, Rev 0<br>-M6-HLP-00007005, Rev 0<br>-M6-HLP-00007006, Rev 0<br>-M6-HLP-00007007, Rev 0<br>-M6-HLP-00009001, Rev 0<br>-M6-HLP-00009002, Rev 0<br>-M6-HLP-00009003, Rev 0<br>-M6-HLP-00010001, Rev 0<br>-M6-HLP-00010002, Rev 0<br>-M6-HLP-00010003, Rev 0<br>-M6-HLP-00027001, Rev 0<br>-M6-HLP-00027002, Rev 0<br>-M6-HLP-00027003, Rev 0<br>-M6-HLP-00027004, Rev 0<br>-M6-HLP-00027005, Rev 0<br>-M6-HLP-00027006, Rev 0<br>-M6-HLP-00028004, Rev 0<br>-M6-HLP-00028005, Rev 0 | | |

**Table III.10.E.A – Pretreatment Plant Tank Systems Description**

| Dangerous and/or Mixed Waste Tank Systems Name | System Designation | Engineering Description (Drawing Nos., Specifications Nos., etc.) | Narrative Description, Tables & Figures | Maximum Capacity (gallons) |
|---|---|---|---|---|
| | | -M6-HLP-00028006, Rev 0<br>-MVD-HLP-00006, Rev 8<br>-MVD-HLP-00007, Rev 8<br>-MVD-HLP-00008, Rev 9<br>-MVD-HLP-00009, Rev 8<br>-MV-HLP-00003001, Rev 1<br>-MV-HLP-00004, Rev 3<br>-MV-HLP-00005, Rev 3<br>-MV-HLP-00006, Rev 3<br>-N1D-HLP-00001, Rev 6<br>-N1D-HLP-P0003, Rev 1<br>-N1D-HLP-00007, Rev 6<br>-N1D-HLP-00010, Rev 6<br>-P1-P01T-00001, Rev 8<br><br>**24590-WTP**<br>-3PS-G000-T0002, Rev 9<br>-3PS-MV00-T0001, Rev 5<br>-3PS-MV00-T0003, Rev 3 | | |

| | | | | |
|---|---|---|---|---|
| **Cesium Ion Exchange Process System**<br><br>CXP-VSL-00004 (Cesium Ion Exchange Feed<br><br>CXP-VSL-00026A (Cesium Ion Exchange Treated LAW Collection Vessel)<br><br>CXP-VSL-00026B (Cesium Ion Exchange Treated LAW Collection Vessel)<br><br>CXP-VSL-00026C (Cesium Ion Exchange Treated LAW Collection Vessel)<br><br>CXP-IXC-00001 (Cesium Ion Exchange Column)<br><br>CXP-IXC-00002 (Cesium Ion Exchange Column)<br><br>CXP-IXC-00003 (Cesium Ion Exchange Column)<br><br>CXP-IXC-00004 (Cesium Ion Exchange Column) | CXP | **24590-PTF**<br>-M5-V17T-00012001, Rev 0<br>-M5-V17T-00012002, Rev 0<br>-M5-V17T-00013, Rev 3<br>-M5-V17T-00025, Rev 1<br>-M6-CXP-00001002, Rev 1<br>-M6-CXP-00001003, Rev 1<br>-M6-CXP-00001004, Rev 2<br>-M6-CXP-00001006, Rev 0<br>-M6-CXP-00001007, Rev 0<br>-M6-CXP-00002001, Rev 1<br>-M6-CXP-00002002, Rev 1<br>-M6-CXP-00003001, Rev 1<br>-M6-CXP-00003002, Rev 1<br>-M6-CXP-00003003, Rev 0<br>-M6-CXP-00005001, Rev 1<br>-M6-CXP-00005002, Rev 1<br>-M6-CXP-00005003, Rev 1<br>-M6-CXP-00005004, Rev 0<br>-M6-CXP-00007, Rev 2<br>-M6-CXP-000100001, Rev 0<br>-M6-CXP-000100002, Rev 0<br>-M6-CXP-000100003, Rev 0<br>-M6-CXP-000100004, Rev 0<br>-M6-CXP-00011001, Rev 0<br>-M6-CXP-00011002, Rev 0<br>-M6-CXP-00011003, Rev 0<br>-M6-CXP-00011004, Rev 0<br>-M6-CXP-00011005, Rev 0 | Section 4D.2.5; Tables 4D-1 and 4D-3; and Figures 4A-1, 4A-2 and 4A-2A of Operating Unit Group 10, Chapter 4 of this Permit. | CXP-VSL-00004 = 10,633<br><br>CXP-VSL-00026A = 38,000<br><br>CXP-VSL-00026B = 38,000<br><br>CXP-VSL-00026C = 38,000<br><br>CXP-IXC-00001 = 680<br><br>CXP-IXC-00002= 680<br><br>CXP-IXC-00003 = 680<br><br>CXP-IXC-00004 = 680 |

**Table III.10.E.A – Pretreatment Plant Tank Systems Description**

| Dangerous and/or Mixed Waste Tank Systems Name | System Designation | Engineering Description (Drawing Nos., Specifications Nos., etc.) | Narrative Description, Tables & Figures | Maximum Capacity (gallons) |
|---|---|---|---|---|
| | | -M6-CXP-00011006, Rev 0<br>-M6-CXP-00011007, Rev 0<br>-M6-CXP-00012001, Rev 0<br>-M6-CXP-00012002, Rev 0<br>-M6-CXP-00012003, Rev 0<br>-M6-CXP-00012004, Rev 0<br>-M6-CXP-00013, Rev 2<br>-MV-CXP-P0002, Rev 0<br>-MV-CXP-P0008, Rev 0<br>-MV-CXP-P0009, Rev 0<br>-MV-CXP-P0010, Rev 0<br>-MVD-CXP-P0015, Rev 0<br>-MVD-CXP-P0021, Rev 1<br>-MVD-CXP-P0022, Rev 1<br>-MVD-CXP-P0023, Rev 1<br>-N1D-CXP-P0003, Rev 1<br>-N1D-CXP-P0007, Rev 1<br>-P1-P01T-00001, Rev 8<br>-P1-P01T-00002, Rev 7<br><br>**24590-WTP**<br>-3PS-G000-T0002, Rev 9<br>-3PS-MV00-T0001, Rev 5<br>-3PS-MV00-T0002, Rev 3<br>-3PS-MV00-T0003, Rev 3 | | |

**Table III.10.E.A – Pretreatment Plant Tank Systems Description**

| Dangerous and/or Mixed Waste Tank Systems Name | System Designation | Engineering Description (Drawing Nos., Specifications Nos., etc.) | Narrative Description, Tables & Figures | Maximum Capacity (gallons) |
|---|---|---|---|---|
| **Cesium Nitric Acid Recovery Process System**<br><br>CNP-VSL-00001 (Cesium Evaporator Eluant Lute Pot)<br><br>CNP-VSL-00003 (Eluate Contingency Storage Vessel)<br><br>CNP-VSL-00004 (Cesium Evaporator Recovered Nitric Acid Vessel) | CNP | **24590-PTF**<br>-M5-V17T-00014, Rev 2<br>-M6-CNP-00001001, Rev 0<br>-M6-CNP-00001002, Rev. 0<br>-M6-CNP-00001003, Rev. 0<br>-M6-CNP-00002001, Rev 0<br>-M6-CNP-00002002, Rev 0<br>-M6-CNP-00002003, Rev 0<br>-M6-CNP-00003001, Rev 0<br>-M6-CNP-00003002, Rev 0<br>-M6-CNP-00003003, Rev 0<br>-M6-CNP-00003004, Rev 0<br>-M6-CNP-00004, Rev 3<br>-M6-CNP-00005, Rev 2<br>-MV-CNP-P0001, Rev 0<br>-MV-CNP-P0002, Rev 1<br>-MV-CNP-P0005, Rev 0<br>-MVD-CNP-P0003, Rev 1<br>-MVD-CNP-P0007, Rev 2<br>-MVD-CNP-P0010, Rev 0<br>-N1D-CNP-P0006, Rev 3<br>-N1D-CNP-P0009, Rev 1<br>-N1D-CNP-P0011, Rev 1<br>-P1-P01T-00001, Rev 7 | Section 4D.2.6; Tables 4D-1 and 4D-3; and Figures 4A-1, 4A-2 and 4A-2A of Operating Unit Group 10, Chapter 4 of this Permit. | CNP-VSL-00001 = 109<br><br>CNP-VSL-00003 = 21,713<br><br>CNP-VSL-00004 = 11,115 |

**Table III.10.E.A – Pretreatment Plant Tank Systems Description**

| Dangerous and/or Mixed Waste Tank Systems Name | System Designation | Engineering Description (Drawing Nos., Specifications Nos., etc.) | Narrative Description, Tables & Figures | Maximum Capacity (gallons) |
|---|---|---|---|---|
| **Treated LAW Concentrate Storage Process System**<br><br>TCP-VSL-00001 (Treated LAW Concentrate Storage Vessel) | TCP | **24590-PTF**<br>-M5-V17T-00006, Rev 1<br>-M6-TCP-00001001, Rev 1<br>-M6-TCP-00001002, Rev 1<br>-M6-TCP-00001003, Rev 0<br>-M6-TCP-00002001, Rev 0<br>-M6-TCP-00002002, Rev 0<br>-M6-TCP-00002003, Rev 0<br>-M6-TCP-00002004, Rev 0<br>-M6-TCP-00002005, Rev 0<br>-MV-TCP-P0002, Rev 1<br>-MVD-TCP-P0002, Rev 2<br>-N1D-TCP-P0001, Rev 2<br>-P1-P01T-00001, Rev 8<br><br>**24590-WTP**<br>-3PS-G000-T0002, Rev 9<br>-3PS-MV00-T0001, Rev 5<br>-3PS-MV00-T0002, Rev 3<br>-3PS-MV00-T0003, Rev 3 | Section 4D.2.12; Tables 4D-1 and 4D-3; and Figures 4A-1, 4A-2 and 4A-2A of Operating Unit Group 10, Chapter 4 of this Permit. | TCP-VSL-00001 = 146,740 |
| **Treated LAW Evaporation Process System**<br><br>TLP-VSL-00002 (Treated LAW Evaporator Condensate Vessel) | TLP | **24590-PTF**<br>-3PS-MEVV-T0001, Rev 3<br>-M5-V17T-00005, Rev 2<br>-M6-TLP-00001, Rev 3<br>-M6-TLP-00002001, Rev 0 | Section 4D.2.11; Tables 4D-1 and 4D-3; and Figures 4A-1, 4A-2 and 4A-2A of Operating Unit Group 10, Chapter 4 of this Permit. | TLP-VSL-00002 = 2,227<br><br>TLP-VSL-00009A = 130,010<br><br>TLP-VSL-00009B = 130,010 |

**Table III.10.E.A – Pretreatment Plant Tank Systems Description**

| Dangerous and/or Mixed Waste Tank Systems Name | System Designation | Engineering Description (Drawing Nos., Specifications Nos., etc.) | Narrative Description, Tables & Figures | Maximum Capacity (gallons) |
|---|---|---|---|---|
| TLP-VSL-00009A (LAW SBS Condensate Receipt Vessel)<br><br>TLP-VSL-00009B (LAW SBS Condensate Receipt Vessel) | | -M6-TLP-00002002, Rev 0<br>-M6-TLP-00002003, Rev 0<br>-M6-TLP-00002004, Rev 0<br>-M6-TLP-00003001, Rev 0<br>-M6-TLP-00003002, Rev 0<br>-M6-TLP-00003003, Rev 0<br>-M6-TLP-00003004, Rev 0<br>-M6-TLP-00005001, Rev 0<br>-M6-TLP-00005002, Rev 0<br>-M6-TLP-00005003, Rev 0<br>-M6-TLP-00005004, Rev 0<br>-M6-TLP-00005005, Rev 0<br>-M6-TLP-00006001, Rev 0<br>-M6-TLP-00006002, Rev 0<br>-M6-TLP-00006003, Rev 0<br>-M6-TLP-00006004, Rev 0<br>-M6-TLP-00006005, Rev 0<br>-MVD-TLP-P0001, Rev 2<br>-MVD-TLP-P0002, Rev 2<br>-MVD-TLP-00004, Rev 1<br>-MV-TLP-P0001, Rev 1<br>-MV-TLP-P0002, Rev 1<br>-N1D-TLP-P0001, Rev 2<br>-N1D-TLP-P0006, Rev 1<br>-P1-P01T-00001, Rev 8 | | |

**Table III.10.E.A – Pretreatment Plant Tank Systems Description**

| Dangerous and/or Mixed Waste Tank Systems Name | System Designation | Engineering Description (Drawing Nos., Specifications Nos., etc.) | Narrative Description, Tables & Figures | Maximum Capacity (gallons) |
|---|---|---|---|---|
| | | -P1-P01T-00002, Rev 7<br><br>**24590-WTP**<br>-3PS-G000-T0002, Rev 9<br>-3PS-MV00-T0001, Rev 5<br>-3PS-MV00-T0002, Rev 3<br>-3PS-MV00-T0003, Rev 3 | | |
| **Spent Resin and Dewatering Process System**<br><br>RDP-VSL-00002A (Spent Resin Slurry Vessel)<br><br>RDP-VSL-00002B (Spent Resin Slurry Vessel)<br><br>RDP-VSL-00002C (Spent Resin Slurry Vessel)<br><br>RDP-VSL-00004 (Spent Resin Dewatering Moisture Separation Vessel) | RDP | **24590-PTF**<br>-3PS-MWD0-TP003, Rev 1<br>-M5-V17T-00020, Rev 2<br>-M6-RDP-00001001, Rev 0<br>-M6-RDP-00001002, Rev 0<br>-M6-RDP-00001003, Rev 0<br>-M6-RDP-00001004, Rev 0<br>-M6-RDP-00001005, Rev 0<br>-M6-RDP-00002, Rev 4<br>-M6-RDP-00006, Rev 3<br>-MVD-RDP-P0005, Rev 1<br>-MVD-RDP-P0006, Rev 1<br>-MVD-RDP-P0007, Rev 3<br>-MVD-RDP-P0008, Rev 0<br>-MV-RDP-P0001, Rev 0<br>-MV-RDP-P0002, Rev 0<br>-MV-RDP-P0003, Rev 0<br>-P1-P01T-00001, Rev 8 | Section 4D.2.13; Tables 4D-1 and 4D-3; and Figures 4A-1, 4A-2 and 4A-2A of Operating Unit Group 10, Chapter 4 of this Permit. | RDP-VSL-00002A = 15,230<br><br>RDP-VSL-00002B = 15,230<br><br>RDP-VSL-00002C = 15,230<br><br>RDP-VSL-00004 = 101 |

**Table III.10.E.A – Pretreatment Plant Tank Systems Description**

| Dangerous and/or Mixed Waste Tank Systems Name | System Designation | Engineering Description (Drawing Nos., Specifications Nos., etc.) | Narrative Description, Tables & Figures | Maximum Capacity (gallons) |
|---|---|---|---|---|
| | | **24590-WTP**<br>-3PS-G000-T0002, Rev 9<br>-3PS-MV00-T0001, Rev 5<br>-3PS-MV00-T0002, Rev 3<br>-3PS-MV00-T0003, Rev 3 | | |
| **Pretreatment Plant Radioactive Liquid Waste Disposal System**<br><br>RLD-TK-00006A (Process Condensate Tank)<br><br>RLD-TK-00006B (Process Condensate Tank)<br><br>RLD-VSL-00017A (Alkaline Effluent Vessel)<br><br>RLD-VSL-00017B (Alkaline Effluent Vessel) | RLD | **24590-PTF**<br>-M5-V17T-00022003, Rev 2<br>-M5-V17T-00022004, Rev 3<br>-M6-RLD-00001001, Rev 0<br>-M6-RLD-00001002, Rev 0<br>-M6-RLD-00001003, Rev 0<br>-M6-RLD-00001004, Rev 0<br>-M6-RLD-00002001, Rev 0<br>-M6-RLD-00002002, Rev 0<br>-M6-RLD-00002003, Rev 0<br>-M6-RLD-00003001, Rev 0<br>-M6-RLD-00003002, Rev 0<br>-M6-RLD-00003003, Rev 0<br>-M6-RLD-00004, Rev 2<br>-M6-RLD-00005, Rev 3<br>-M6-RLD-00006, Rev 3<br>-M6-RLD-00007001, Rev 0<br>-MVD-RLD-P0005, Rev 3<br>-MVD-RLD-P0006, Rev 3<br>-MV-RLD-P0001, Rev 0 | Section 4D.2.16; Tables 4D-1 and 4D-3; and Figures 4A-1, 4A-2 and 4A-2A of Operating Unit Group 10, Chapter 4 of this Permit. | RLD-TK-00006A = 343,734<br><br>RLD-TK-00006B = 343,734<br><br>RLD-VSL-00017A = 34,340<br><br>RLD-VSL-00017B = 34,340 |

**Table III.10.E.A – Pretreatment Plant Tank Systems Description**

| Dangerous and/or Mixed Waste Tank Systems Name | System Designation | Engineering Description (Drawing Nos., Specifications Nos., etc.) | Narrative Description, Tables & Figures | Maximum Capacity (gallons) |
|---|---|---|---|---|
| | | -MV-RLD-P0002, Rev 0<br>-N1D-RLD-P0002, Rev 2<br>-P1-P01T-00001, Rev 8<br><br>**24590-WTP**<br>-3PS-G000-T0002, Rev 9<br>-3PS-MV00-T0001, Rev 5<br>-3PS-MV00-T0002, Rev 3<br>-3PS-MV00-T0003, Rev 3 | | |
| **Pretreatment Plant Wash and Disposal System**<br><br>PWD-VSL-00015 (Acidic/Alkaline Effluent Vessel)<br><br>PWD-VSL-00016 (Acidic/Alkaline Effluent Vessel)<br><br>PWD-VSL-00033 (Ultimate Overflow Vessel)<br><br>PWD-VSL-00043 (HLW Effluent Transfer Vessel)<br><br>PWD-VSL-00044 (Plant Wash Vessel) | PWD | **24590-PTF**<br>-M5-V17T-00022001, Rev 2<br>-M5-V17T-00022002, Rev 2<br>-M6-PWD-00001, Rev 2<br>-M6-PWD-00002001, Rev 0<br>-M6-PWD-00002002, Rev 0<br>-M6-PWD-00003001, Rev 0<br>-M6-PWD-00003002, Rev 0<br>-M6-PWD-00003003, Rev 0<br>-M6-PWD-00003004, Rev 0<br>-M6-PWD-00005, Rev 3<br>-M6-PWD-00006, Rev 2<br>-M6-PWD-00007, Rev 3<br>-M6-PWD-00008, Rev 3<br>-M6-PWD-00009, Rev 3<br>-M6-PWD-00010, Rev 3 | Section 4D.2.15; Tables 4D-1 and 4D-3; and Figures 4A-1, 4A-2 and 4A-2A of Operating Unit Group 10, Chapter 4 of this Permit. | PWD-VSL-00015 = 119,150<br><br>PWD-VSL-00016 = 119,150<br><br>PWD-VSL-00033 = 41,650<br><br>PWD-VSL-00043 = 41,650<br><br>PWD-VSL-00044 = 103,024<br><br>PWD-VSL-00046 = 4,982 |

**Table III.10.E.A – Pretreatment Plant Tank Systems Description**

| Dangerous and/or Mixed Waste Tank Systems Name | System Designation | Engineering Description (Drawing Nos., Specifications Nos., etc.) | Narrative Description, Tables & Figures | Maximum Capacity (gallons) |
|---|---|---|---|---|
| PWD-VSL-00046 (C3 Floor Drain Collection Vessel) | | -M6-PWD-00011, Rev 2<br>-M6-PWD-00012, Rev 2<br>-M6-PWD-00014, Rev 3<br>-M6-PWD-P0018, Rev 0<br>-M6-PWD-P0019, Rev 0<br>-M6-PWD-00020001, Rev 0<br>-M6-PWD-00020002, Rev 0<br>-M6-PWD-00020003, Rev 0<br>-M6-PWD-00020004, Rev 0<br>-M6-PWD-00020005, Rev 0<br>-M6-PWD-00020006, Rev 0<br>-M6-PWD-00021001, Rev 0<br>-M6-PWD-00021002, Rev 0<br>-M6-PWD-00021003, Rev 0<br>-M6-PWD-00021004, Rev 0<br>-M6-PWD-00021005, Rev 0<br>-M6-PWD-00021006, Rev 0<br>-M6-PWD-00023001, Rev 0<br>-M6-PWD-00023002, Rev 0<br>-M6-PWD-00023003, Rev 0<br>-M6-PWD-00023004, Rev 0<br>-M6-PWD-00023005, Rev 0<br>-M6-PWD-00024001, Rev 0<br>-M6-PWD-00024002, Rev 0<br>-M6-PWD-00024003, Rev 0 | | |

**Table III.10.E.A – Pretreatment Plant Tank Systems Description**

| Dangerous and/or Mixed Waste Tank Systems Name | System Designation | Engineering Description (Drawing Nos., Specifications Nos., etc.) | Narrative Description, Tables & Figures | Maximum Capacity (gallons) |
|---|---|---|---|---|
| | | -M6-PWD-00024004, Rev 0<br>-M6-PWD-00024005, Rev 0<br>-M6-PWD-00024006, Rev 0<br>-M6-PWD-00024007, Rev 0<br>-M6-PWD-00025001, Rev 0<br>-M6-PWD-00025002, Rev 0<br>-M6-PWD-00025003, Rev 0<br>-M6-PWD-00025004, Rev 0<br>-M6-PWD-00026, Rev 2<br>-M6-PWD-00029, Rev 3<br>-M6-PWD-00033, Rev 2<br>-M6-PWD-00041, Rev 3<br>-M6-PWD-00043, Rev3<br>-M6-PWD-00044, Rev 3<br>-M6-PWD-00046, Rev 2<br>-M6-PWD-00050, Rev 2<br>-M6-PWD-00051, Rev 2<br>-M6-PWD-00057, Rev 4<br>-M6-PWD-00058001, Rev 0<br>-M6-PWD-00058002, Rev 0<br>-MVD-PWD-P0001, Rev 3<br>-MVD-PWD-00002, Rev 8<br>-MVD-PWD-P0003, Rev 2<br>-MVD-PWD-P0010, Rev 1<br>-MVD-PWD-P0011, Rev 3 | | |

**Table III.10.E.A – Pretreatment Plant Tank Systems Description**

| Dangerous and/or Mixed Waste Tank Systems Name | System Designation | Engineering Description (Drawing Nos., Specifications Nos., etc.) | Narrative Description, Tables & Figures | Maximum Capacity (gallons) |
|---|---|---|---|---|
| | | -MVD-PWD-P0012, Rev 3<br>-MV-PWD-P0001001, Rev 1<br>-MV-PWD-P0001002, Rev 1<br>-MV-PWD-P0003001 , Rev 1<br>-MV-PWD-P0003002, Rev 1<br>-MV-PWD-P0005, Rev 1<br>-MV-PWD-P0006, Rev 1<br>-MV-PWD-P0007, Rev 1<br>-MV-PWD-P0010, Rev 1<br>-N1D-PWD-P0001, Rev 1<br>-N1D-PWD-00002, Rev 5<br>-N1D-PWD-P0003, Rev 3<br>-N1D-PWD-P0005, Rev 2<br>-N1D-PWD-P0006, Rev 2<br>-P1-P01T-00001, Rev 8<br>-P1-P01T-00006, Rev 4 | | |
| **Pretreatment Vessel Vent Process System**<br><br>PVP-VSL-00001 (Vessel Vent HEME Drain Collection Vessel) | PVP | **24590-PTF**<br>-M5-V17T-00021001, Rev 2<br>-M5-V17T-00021002, Rev 2<br>-M5-V17T-00021004, Rev 2<br>-M6-PVP-00002, Rev 3<br>-M6-PVP-00004001, Rev 0<br>-M6-PVP-00004002, Rev 0<br>-M6-PVP-00017001, Rev 0<br>-M6-PVP-00017002, Rev 0 | Section 4D.4.2; Tables 4D-1 and 4D-3; and Figures 4A-1, 4A-2 and 4A-2A of Operating Unit Group 10, Chapter 4 of this Permit. | PVP-VSL-00001 = 1,969 |

**Table III.10.E.A – Pretreatment Plant Tank Systems Description**

| Dangerous and/or Mixed Waste Tank Systems Name | System Designation | Engineering Description (Drawing Nos., Specifications Nos., etc.) | Narrative Description, Tables & Figures | Maximum Capacity (gallons) |
|---|---|---|---|---|
| | | -M6-PVP-00017003, Rev 0<br>-M6-PVP-00018001, Rev 1<br>-M6-PVP-00018002, Rev 0<br>-MVD-PVP-P0001, Rev 0<br>-MV-PVP-P0002, Rev 1<br>-N1D-PVP-P0002, Rev 1<br>-P1-P01T-00001, Rev 8<br><br>**24590-WTP**<br>-3PS-G000-T0002, Rev 9<br>-3PS-MV00-T0001, Rev 5<br>-3PS-MV00-T0002, Rev 3<br>-3PS-MV00-T0003, Rev 3 | | |
| **Pretreatment In-Cell Handling System**<br><br>PIH-TK-00001 (Decontamination Soak Tank) | PIH | **24590-PTF**<br>-M6-PIH-00001001, Rev 0<br>-M6-PIH-00001002, Rev 0<br>-P1-P01T-00001, Rev 8<br><br>**24590-WTP**<br>-3PS-HD00-T0001, Rev 4 | Section 4.D.2.14; Tables 4D-1 and 4D-3; and Figures 4A-1, 4A-2 and 4A-2A of Operating Unit Group 10, Chapter 4 of this Permit. | PIH-TK-00001 = 1504 |

1

**Table III.10.E.B – LAW Vitrification Plant Tank Systems Description**

| Dangerous and/or Mixed Waste Tank Systems Name | Unit Designation | Engineering Description (Drawing Nos, Specification Nos, etc.) | Narrative Description, Tables & Figures | Maximum Capacity (gallons) |
|---|---|---|---|---|
| **LAW Concentrate Receipt Process System**<br><br>LCP-VSL-00001 (LAW Melter 1 Concentrate Receipt Vessel)<br><br>LCP-VSL-00002 (LAW Melter 2 Concentrate Receipt Vessel) | LCP | **24590-LAW**<br>-M5-V17T-00001, Rev 6<br>-M5-V17T-00002, Rev 6<br>-M6-LCP-00001002, Rev 0<br>-M6-LCP-00001003, Rev 0<br>-M6-LCP-00002003, Rev 0<br>-M6-LCP-00002004, Rev 0<br>-MV-LCP-P0001, Rev 0<br>-MV-LCP-P0002, Rev 0<br>-MVD-LCP-P0004, Rev 1<br>-MVD-LCP-P0005, Rev 1<br>-N1D-LCP-P0001, Rev 1<br>-P1-P01T-00002, Rev 7 | Section 4E.2.1; Tables 4E-1 and 4E-3; and Figures 4A-1 and 4A-3 of Operating Unit Group 10, Chapter 4 of this Permit. | LCP-VSL-00001 = 18,130<br><br>LCP-VSL-00002 = 18,130 |
| **LAW Melter Feed Process System**<br><br>LFP-VSL-00001 (Melter 1 Feed Preparation Vessel)<br><br>LFP-VSL-00002 (Melter 1 Feed Vessel)<br><br>LFP-VSL-00003 (Melter 2 Feed Preparation Vessel) | LFP | **24590-LAW**<br>-M5-V17T-00001, Rev 6<br>-M5-V17T-00002, Rev 6<br>-M6-LFP-00001001, Rev 0<br>-M6-LFP-00001002, Rev 0<br>-M6-LFP-00001003, Rev 0<br>-M6-LFP-00001004, Rev 0<br>-M6-LFP-00001005, Rev 0<br>-M6-LFP-00001006, Rev 0<br>-M6-LFP-00003001, Rev 0<br>-M6-LFP-00003002, Rev 0 | Section 4E.2.1; Tables 4E-1 and 4E-3; and Figures 4A-1 and 4A-3of Operating Unit Group 10, Chapter 4 of this Permit. | LFP-VSL-00001 = 9,123<br><br>LFP-VSL-00002 = 9,123<br><br>LFP-VSL-00003 = 9,123<br><br>LFP-VSL-00004 = 9,123 |

**Table III.10.E.B – LAW Vitrification Plant Tank Systems Description**

| Dangerous and/or Mixed Waste Tank Systems Name | Unit Designation | Engineering Description (Drawing Nos, Specification Nos, etc.) | Narrative Description, Tables & Figures | Maximum Capacity (gallons) |
|---|---|---|---|---|
| LFP-VSL-00004 (Melter 2 Feed Vessel) | | -M6-LFP-00003003, Rev 0<br>-M6-LFP-00003004, Rev 0<br>-M6-LFP-00003005, Rev 0<br>-M6-LFP-00003006, Rev 0<br>-MV-LFP-P0001, Rev 0<br>-MV-LFP-P0002, Rev 0<br>-MV-LFP-P0004, Rev 0<br>-MV-LFP-P0005, Rev 0<br>-MVD-LFP-P0007, Rev 1<br>-MVD-LFP-P0008, Rev 1<br>-MVD-LFP-P0010, Rev 1<br>-MVD-LFP-P0011, Rev 1<br>-P1-P01T-00002, Rev 7<br>-N1D-LFP-00004, Rev 2<br>-N1D-LFP-00006, Rev 0 | | |
| **LAW Secondary Off-gas/Vessel Vent Process System**<br><br>LVP-TK-00001 (LAW Caustic Collection Tank) | LVP | **24590-LAW**<br>-M5-V17T-00011, Rev 6<br>-P1-P01T-00004, Rev 5<br>-VDCN-M-13-00001<br>-MTD-LVP-00001, Rev 1<br>-N1D-LVP-00002, Rev 2 | Section 4E.4.2.2; Tables 4E-1 and 4E-3; and Figures 4A-1 and 4A-3 of Operating Unit Group 10, Chapter 4 of this Permit. | LVP-TK-00001 = 14,232 |
| **LAW Primary Off-gas Process System** | LOP | **24590-LAW**<br>-M5-V17T-P0007, Rev 0<br>-M5-V17T-P0008, Rev 0 | Section 4E.4.2.1; Tables 4E-1 and 4E-3; and Figures 4A-1 and 4A-3of Operating Unit Group 10, Chapter 4 of this Permit. | LOP-VSL-00001 = 9,056<br><br>LOP-VSL-00002 = 9,056 |

**Table III.10.E.B – LAW Vitrification Plant Tank Systems Description**

| Dangerous and/or Mixed Waste Tank Systems Name | Unit Designation | Engineering Description (Drawing Nos, Specification Nos, etc.) | Narrative Description, Tables & Figures | Maximum Capacity (gallons) |
|---|---|---|---|---|
| LOP-VSL-00001 (LAW Melter 1 SBS Condensate Vessel)<br><br>LOP-VSL-00002 (LAW Melter 2 SBS Condensate Vessel) | | -M6-LOP-00001001, Rev 0<br>-M6-LOP-000010022, Rev 0<br>-MV-LOP-P0001, Rev 0<br>-MV-LOP-P0002, Rev 0<br>-MVD-LOP-00004, Rev 6<br>-MVD-LOP-00005, Rev 6<br>-N1D-LOP-P0002, Rev 1<br>-P1-P01T-00002, Rev 7 | | |
| **LAW Vitrification Plant Radioactive Liquid Waste Disposal System**<br><br>RLD-VSL-00003 (Plant Wash Vessel)<br><br>RLD-VSL-00004 (C3/C5 Drains/Sump Collection Vessel)<br><br>RLD-VSL-00005 (SBS Condensate Collection Vessel) | RLD | **24590-LAW**<br>-M5-V17T-00014, Rev 6<br>-M6-RLD-00001001, Rev 0<br>-M6-RLD-00001002, Rev 0<br>-M6-RLD-00001003, Rev 0<br>-M6-RLD-00001004, Rev 0<br>-M6-RLD-00001005, Rev 0<br>-M6-RLD-00001006, Rev 0<br>-M6-RLD-00002001, Rev 0<br>-M6-RLD-00002002, Rev 0<br>-M6-RLD-00002003, Rev 0<br>-M6-RLD-00002004, Rev 0<br>-M6-RLD-00002005, Rev 0<br>-M6-RLD-00003001, Rev 0<br>-M6-RLD-00003002, Rev 2 | Section 4E.2.3; Tables 4E-1 and 4E-3; and Figures 4A-1 and 4A-3 of Operating Unit Group 10, Chapter 4 of this Permit. | RLD-VSL-00003 = 25,780<br><br>RLD-VSL-00004 = 7696<br><br>RLD-VSL-00005 = 25,780 |

**Table III.10.E.B – LAW Vitrification Plant Tank Systems Description**

| Dangerous and/or Mixed Waste Tank Systems Name | Unit Designation | Engineering Description (Drawing Nos, Specification Nos, etc.) | Narrative Description, Tables & Figures | Maximum Capacity (gallons) |
|---|---|---|---|---|
| | | -M6-RLD-00003003, Rev 2<br>-MVD-RLD-P0001, Rev 1<br>-MVD-RLD-P0006, Rev 2<br>-MVD-RLD-P0007, Rev 2<br>-MV-RLD-P0001, Rev 2<br>-MV-RLD-P0002, Rev 1<br>-MV-RLD-P0003, Rev 1<br>-P1-P01T-00001, Rev 4<br>-P1-P01T-00002, Rev 7<br>-N1D-RLD-00001, Rev 5<br>-N1D-RLD-00002, Rev 3<br>-N1D-RLD-00005, Rev 4 | | |

1

**Table III.10.E.C – HLW Vitrification Plant Tank Systems Description**

| Mixed Waste Tank Systems Name | Unit Designation | Engineering Description (Drawing Nos, Specification Nos, etc.) | Narrative Description, Tables & Figures | Maximum Capacity (gallons) |
|---|---|---|---|---|
| **HLW Concentrate Receipt Process System**<br><br>The HCP System has ancillary equipment only | HCP | **24590-HLW**<br>-M5-V17T-P0001, Rev 4<br>-M6-HCP-00001001, Rev 1<br>-M6-HCP-00002001, Rev 1 | Section 4F.2.1; Tables 4F-4; Figures 4A-1 and 4A-4 of Operating Unit Group 10, Chapter 4 of this Permit. | |
| **HLW Melter Feed Process System**<br><br>HFP-VSL-00001 (Melter 1 Feed Preparation Vessel) | HFP | **24590-HLW**<br>-3YD-HFP-00001[a]<br>-M5-V17T-00001, Rev 5<br>-P1-P01T-00002, Rev 7<br>-M6-HFP-00001001, Rev 0<br>-M6-HFP-00001002, Rev 0<br>-M6-HFP-00001003, Rev 0<br>-M6-HFP-00001004, Rev 0<br>-M6-HFP-00007001, Rev 0<br><br>**24590-WTP**<br>-3PS-G000-T0002, Rev 9<br>-3PS-MV00-T0001, Rev 5<br>-3PS-MV00-T0002, Rev 3<br>-3PS-MV00-T0003, Rev 3 | Section 4F.2.1; Tables 4F-4; Figures 4A-1, 4A-4 and 4A-53 of Operating Unit Group 10, Chapter 4 of this Permit. | HFP-VSL-00001 = 8,311 |
| **Melter Feed Process System cont.**<br><br>HFP-VSL-00002 (Melter 1 Feed Vessel) | HFP | **24590-HLW**<br>-3YD-HFP-00001[a]<br>-M5-V17T-P0001, Rev 4<br>-P1-P01T-00002, Rev 7<br>-M6-HFP-00002001, Rev 0 | Section 4F.2.1; Tables 4F-1 and 4F-3; Figures 4A-1, 4A-4 and 4A-53 of Operating Unit Group 10, Chapter 4 of this Permit. | HFP-VSL-00002 = 8,311 |

**Table III.10.E.C – HLW Vitrification Plant Tank Systems Description**

| Mixed Waste Tank Systems Name | Unit Designation | Engineering Description (Drawing Nos, Specification Nos, etc.) | Narrative Description, Tables & Figures | Maximum Capacity (gallons) |
|---|---|---|---|---|
| | | -M6-HFP-00002002, Rev 0<br>-M6-HFP-00002003, Rev 0<br>-M6-HFP-00008001, Rev 0<br><br>**24590-WTP**<br>-3PS-G000-T0002, Rev 9<br>-3PS-MV00-T0001, Rev 5<br>-3PS-MV00-T0002, Rev 3<br>-3PS-MV00-T0003, Rev 3 | | |
| **Melter Feed Process System cont.**<br><br>HFP-VSL-00005 (Melter 2 Feed Preparation Vessel) | HFP | **24590-HLW**<br>-3YD-HFP-00001[a]<br>-M5-V17T-P0001, Rev 4<br>-P1-P01T-00002, Rev 7<br>-M6-HFP-20001001, Rev 0<br>-M6-HFP-20001002, Rev 0<br>-M6-HFP-20001003, Rev 0<br>-M6-HFP-20001004, Rev 0<br>-M6-HFP-20007001, Rev 0<br><br>**24590-WTP**<br>-3PS-G000-T0002, Rev 9<br>-3PS-MV00-T0001, Rev 5<br>-3PS-MV00-T0002, Rev 3<br>-3PS-MV00-T0003, Rev 3 | Section 4F.2.1; Tables 4F-1 and 4F-3; Figures 4A-1, 4A-4 and 4A-53 of Operating Unit Group 10, Chapter 4 of this Permit. | HFP-VSL-00005 = 8,311 |

**Table III.10.E.C – HLW Vitrification Plant Tank Systems Description**

| Mixed Waste Tank Systems Name | Unit Designation | Engineering Description (Drawing Nos, Specification Nos, etc.) | Narrative Description, Tables & Figures | Maximum Capacity (gallons) |
|---|---|---|---|---|
| **Melter Feed Process System cont.**<br><br>HFP-VSL-00006 (Melter 2 Feed Vessel) | HFP | **24590-HLW**<br>-3YD-HFP-00001[a]<br>-M5-V17T-P0001, Rev 4<br>-P1-P01T-00002, Rev 7<br>-M6-HFP-20002001, Rev 0<br>-M6-HFP-20002002, Rev 0<br>-M6-HFP-20002003, Rev 0<br>-M6-HFP-20008001, Rev 0<br><br>**24590-WTP**<br>-3PS-G000-T0002, Rev 9<br>-3PS-MV00-T0001, Rev 5<br>-3PS-MV00-T0002, Rev 3<br>-3PS-MV00-T0003, Rev 3 | Section 4F.2.1; Tables 4F-1 and 4F-3; Figures 4A-1, 4A-4 and 4A-53 of Operating Unit Group 10, Chapter 4 of this Permit. | HFP-VSL-00006 = 8,311 |
| **Melter Off-gas Treatment Process System**<br><br>HOP-VSL-00903 (Melter 1 SBS Condensate Receiver Vessel)<br><br>HOP-VSL-00904 (Melter 2 SBS Condensate Receiver Vessel) | HOP | **24590-HLW**<br>-3YD-HOP-00001[a]<br>-M5-V17T-P0003, Rev 1<br>-M5-V17T-P20003, Rev 1<br>-M6-HOP-00004, Rev 4<br>-M6-HOP-00006001, Rev 0<br>-M6-HOP-00006002, Rev 0<br>-M6-HOP-20004, Rev 5<br>-M6-HOP-20006001, Rev 6<br>-M6-HOP-20006002, Rev 6<br>-MVD-HOP-P0001, Rev 2 | Section 4F.4.2; Tables 4F-1 and 4F-3; Figures 4A-1 and 4A-4 C1-1 and C1-4 of Operating Unit Group 10, Chapter 4 of this Permit. | HOP-VSL-00903 = 9891<br><br>HOP-VSL-00904 = 9891 |

**Table III.10.E.C – HLW Vitrification Plant Tank Systems Description**

| Mixed Waste Tank Systems Name | Unit Designation | Engineering Description (Drawing Nos, Specification Nos, etc.) | Narrative Description, Tables & Figures | Maximum Capacity (gallons) |
|---|---|---|---|---|
| | | -MVD-HOP-P0012, Rev 1<br>-MV-HOP-P0001, Rev 2<br>-MV-HOP-P0003, Rev 2<br>-N1D-HOP-P0009, Rev 2<br>-P1-P01T-00001, Rev 9<br><br>**24590-WTP**<br>-3PS-G000-T0002, Rev 9<br>-3PS-MV00-T0001, Rev 5<br>-3PS-MV00-T0002, Rev 3<br>-3PS-MV00-T0003, Rev 3 | | |
| **HLW Canister Decontamination Handling System**<br><br>HDH-VSL-00001 (Canister Rinse Vessel)<br><br>HDH-VSL-00002 (Canister Decon Vessel 1)<br><br>HDH-VSL-00003 (Waste Neutralization Vessel)<br><br>HDH-VSL-00004 (Canister Decon Vessel 2) | HDH | **24590-HLW**<br>-M5-V17T-00006, Rev 6<br>-M6-HDH-00001001, Rev 1<br>-M6-HDH-00002001, Rev 1<br>-M6-HDH-00002002, Rev 0<br>-M6-HDH-00002003, Rev 1<br>-M6-HDH-20001001, Rev 1<br>-M6-HDH-20001002, Rev 0<br>-M0-HDH-P0012001, Rev 1<br>-M0-HDH-P0012002, Rev 1<br>-MV-HDH-00003, Rev 1<br>-MVD-HDH-00003, Rev 5<br>-MVD-HDH-00006, Rev 5<br>-MVD-HDH-P0009, Rev 0 | Section 4F.2.4; Tables 4F-1 and 4F-3; Figures 4A-1 and 4A-4 of Operating Unit Group 10, Chapter 4 of this Permit. | HDH-VSL-00001 = 3314<br><br>HDH-VSL-00002 = 630<br><br>HDH-VSL-00003 = 5315<br><br>HDH-VSL-00004 = 630 |

**Table III.10.E.C – HLW Vitrification Plant Tank Systems Description**

| Mixed Waste Tank Systems Name | Unit Designation | Engineering Description (Drawing Nos, Specification Nos, etc.) | Narrative Description, Tables & Figures | Maximum Capacity (gallons) |
|---|---|---|---|---|
| | | -N1D-HDH-00003, Rev 8<br>-N1D-HDH-P0005, Rev 1<br>-N1D-HDH-P0007, Rev 1<br>-P1-P01T-00001, Rev 9<br>-P1-P01T-00002, Rev 7<br>-3YD-HDH-00002[a]<br><br>**24590-WTP**<br>-3PS-G000-T0002, Rev 9<br>-3PS-MV00-T0001, Rev 5<br>-3PS-MV00-T0002, Rev 3<br>-3PS-MV00-T0003, Rev 3 | | |
| **HLW Melter Cave Support Handling System**<br><br>HSH-TK-00001 (Decontamination Tank Melter Cave 1)<br><br>HSH-TK-00002 (Decontamination Tank Melter Cave 2) | HSH | **24590-HLW**<br>-M6-HSH-00004001, Rev 1<br>-M6-HSH-00004001, Rev 1<br>-M6-HSH-20004001, Rev 1<br>-M6-HSH-20004002, Rev 1<br>-M0-HSH-P0072, Rev 1<br>-N1D-HSH-P0001, Rev 1<br>-P1-P01T-00002, Rev 7<br><br>**24590-WTP**<br>-3PS-HD00-T0001, Rev 4 | Section 4F.2.4; Tables 4F-1 and 4F-4; Figures 4A-1 and 4A-4 of Operating Unit Group 10, Chapter 4 of this Permit. | HSH-TK-00001 = 4,000<br><br>HSH-TK-00002 = 4,000 |
| **HLW Vitrification Plant Radioactive Liquid Waste Disposal System** | RLD | **24590-HLW**<br>-3YD-RLD-00001[a] | Section 4H.2.1; Tables 4-4 and 4-6; Figures C1-1 and C1-4 of | RLD-VSL-00002 = 334 |

**Table III.10.E.C – HLW Vitrification Plant Tank Systems Description**

| Mixed Waste Tank Systems Name | Unit Designation | Engineering Description (Drawing Nos, Specification Nos, etc.) | Narrative Description, Tables & Figures | Maximum Capacity (gallons) |
|---|---|---|---|---|
| RLD-VSL-00002 (Off-gas Drains Collection Vessel)<br><br>RLD-VSL-00007 (Acidic Waste Vessel)<br><br>RLD-VSL-00008 (Plant Wash & Drain Vessel) | | -M5-V17T-P0007001, Rev 1<br>-M5-V17T-P0007002, Rev 1<br>-M6-RLD-00001001, Rev 0<br>-M6-RLD-00001002, Rev. 0<br>-M6-RLD-00001003, Rev 0<br>-M6-RLD-00002001, Rev 0<br>-M6-RLD-00002002, Rev 0<br>-M6-RLD-00002003, Rev 0<br>-M6-RLD-00002004, Rev 0<br>-M6-RLD-00006, Rev 4<br>-M6-RLD-00007, Rev 4<br>-M6-RLD-00014, Rev 5<br>-MV-RLD-00002, Rev 2<br>-MV-RLD-P0003, Rev 0<br>-MV-RLD-00025001 Rev 0<br>-MV-RLD-00025002, Rev 0<br>-MV-RLD-00025003, Rev 0<br>-MV-RLD-00025004, Rev 0<br>-MVD-RLD-00005, Rev 9<br>-MVD-RLD-00007, Rev 7<br>-MVD-RLD-00008, Rev 4<br>-N1D-RLD-P0001, Rev 0<br>-N1D-RLD-P0006, Rev 0<br>-N1D-RLD-P0013, Rev 0<br>-P1-P01T-00001, Rev 9 | Operating Unit Group 10, Chapter 4 of this Permit. | RLD-VSL-00007 = 18,145<br><br>RLD-VSL-00008 = 13,774 |

**Table III.10.E.C – HLW Vitrification Plant Tank Systems Description**

| Mixed Waste Tank Systems Name | Unit Designation | Engineering Description (Drawing Nos, Specification Nos, etc.) | Narrative Description, Tables & Figures | Maximum Capacity (gallons) |
|---|---|---|---|---|
| | | -P1-P01T-00002, Rev 7<br>**24590-WTP**<br>-3PS-G000-T0002, Rev 9<br>-3PS-MV00-T0001, Rev 5<br>-3PS-MV00-T0002, Rev 3<br>-3PS-MV00-T0003, Rev 3 | | |
| [a]System Descriptions are maintained in the Administrative Record, and are listed here for information only. | | | | |

1

**Table III.10.E.D – Analytical Laboratory Tank Systems Description**

| Mixed Waste Tank Systems Name | Unit Designation | Engineering Description (Drawing Nos, Specification Nos, etc.) | Narrative Description, Tables & Figures | Maximum Capacity (gallons) |
|---|---|---|---|---|
| **Radioactive Liquid Waste Disposal System**<br><br>RLD-VSL-00164 (Laboratory Area Sink Drain Collection Vessel)<br><br>RLD-VSL-00165 (Hotcell Drain Collection Vessel) | RLD | **24590-LAB**<br>-3YD-RLD-00001[a]<br>-M5-V17T-00029, Rev 4<br>-M6-RLD-00001001, Rev 1<br>-M6-RLD-00001002, Rev 0<br>-M6-RLD-00001003, Rev 0<br>-M6-RLD-00001004, Rev 0<br>-M6-RLD-00002001, Rev 1<br>-M6-RLD-00002003, Rev 0<br>-M6-RLD-00006001, Rev 0<br>-M6-RLD-00006002, Rev 0<br>-M6-RLD-00006003, Rev 0<br>-M6-RLD-00007001, Rev 0<br>-M6-RLD-00007002, Rev 0<br>-M6-RLD-00008001, Rev 0<br>-M6-RLD-00008002, Rev 0<br>-MVD-RLD-P0164, Rev 1<br>-MVD-RLD-P0165, Rev 1<br>-MV-RLD-P0001, Rev 0<br>-N1D-RLD-P0002, Rev 1<br>-N1D-RLD-P0003, Rev 1<br>-P1-60-00007, Rev 3<br>-P1-60-00008, Rev 3 | Section 4H.2.1; Table 4H-1 of Operating Unit Group 10, Chapter 4 of this Permit. | RLD-VSl-00164 = 3180<br><br>RLD-VSL-00165 = 9100 |

**Table III.10.E.D – Analytical Laboratory Tank Systems Description**

| Mixed Waste Tank Systems Name | Unit Designation | Engineering Description (Drawing Nos, Specification Nos, etc.) | Narrative Description, Tables & Figures | Maximum Capacity (gallons) |
|---|---|---|---|---|
| | | **24590-WTP**<br>-3PS-G000-T0002, Rev 9<br>-3PS-MV00-T0001, Rev 5<br>-3PS-MV00-T0002, Rev 3<br>-3PS-MV00-T0003, Rev 3 | | |
| [a]System Descriptions are maintained in the Administrative Record, and are listed here for information only. | | | | |

1

**Table III.10.E.E – Pretreatment Plant Tank System Process and Leak Detection System Instruments and Parameters**

| Tank System Name and Locator (including P&ID) | Control Parameter | Type of Measuring or Leak Detection Instrument | Location of Measuring Instrument (Tag No.) | Instrument Range | Expected Range | Fail States | Instrument Accuracy | Operating Trips (Description & Numerical Limits) | Instrument Calibration Method No. and Range |
|---|---|---|---|---|---|---|---|---|---|
| PWD-SUMP-00071[a] | Not Applicable | Radar Leak Detector | RESERVED | RESERVED | RESERVED | RESERVED | RESERVED | Not Applicable | RESERVED |
| PWD-SUMP-00040[a] | Not Applicable | Bubbler Leak Detector | RESERVED | RESERVED | RESERVED | RESERVED | RESERVED | Not Applicable | RESERVED |
| PWD-SUMP-00001[a] | Not Applicable | Radar Leak Detector | RESERVED | RESERVED | RESERVED | RESERVED | RESERVED | Not Applicable | RESERVED |
| PWD-SUMP-00001A[a] | Not Applicable | Radar Leak Detector | RESERVED | RESERVED | RESERVED | RESERVED | RESERVED | Not Applicable | RESERVED |
| PWD-SUMP-00002[a] | Not Applicable | Radar Leak Detector | RESERVED | RESERVED | RESERVED | RESERVED | RESERVED | Not Applicable | RESERVED |
| PWD-SUMP-00002A[a] | Not Applicable | Radar Leak Detector | RESERVED | RESERVED | RESERVED | RESERVED | RESERVED | Not Applicable | RESERVED |
| PWD-SUMP-00003[a] | Not Applicable | Radar Leak Detector | RESERVED | RESERVED | RESERVED | RESERVED | RESERVED | Not Applicable | RESERVED |
| PWD-SUMP-00004[a] | Not Applicable | Radar Leak Detector | RESERVED | RESERVED | RESERVED | RESERVED | RESERVED | Not Applicable | RESERVED |

**Table III.10.E.E – Pretreatment Plant Tank System Process and Leak Detection System Instruments and Parameters**

| Tank System Name and Locator (including P&ID) | Control Parameter | Type of Measuring or Leak Detection Instrument | Location of Measuring Instrument (Tag No.) | Instrument Range | Expected Range | Fail States | Instrument Accuracy | Operating Trips (Description & Numerical Limits) | Instrument Calibration Method No. and Range |
|---|---|---|---|---|---|---|---|---|---|
| PWD-SUMP-00005[a] | Not Applicable | Radar Leak Detector | RESERVED | RESERVED | RESERVED | RESERVED | RESERVED | Not Applicable | RESERVED |
| PWD-SUMP-00006[a] | Not Applicable | Radar Leak Detector | RESERVED | RESERVED | RESERVED | RESERVED | RESERVED | Not Applicable | RESERVED |
| PWD-SUMP-00007[a] | Not Applicable | Radar Leak Detector | RESERVED | RESERVED | RESERVED | RESERVED | RESERVED | Not Applicable | RESERVED |
| PWD-SUMP-00008[a] | Not Applicable | Radar Leak Detector | RESERVED | RESERVED | RESERVED | RESERVED | RESERVED | Not Applicable | RESERVED |
| PWD-SUMP-00009[a] | Not Applicable | Radar Leak Detector | RESERVED | RESERVED | RESERVED | RESERVED | RESERVED | Not Applicable | RESERVED |
| PWD-SUMP-00010[a] | Not Applicable | Radar Leak Detector | RESERVED | RESERVED | RESERVED | RESERVED | RESERVED | Not Applicable | RESERVED |
| PWD-SUMP-00011[a] | Not Applicable | Radar Leak Detector | RESERVED | RESERVED | RESERVED | RESERVED | RESERVED | Not Applicable | RESERVED |
| PWD-SUMP-00012[a] | Not Applicable | Radar Leak Detector | RESERVED | RESERVED | RESERVED | RESERVED | RESERVED | Not Applicable | RESERVED |

**Table III.10.E.E – Pretreatment Plant Tank System Process and Leak Detection System Instruments and Parameters**

| Tank System Name and Locator (including P&ID) | Control Parameter | Type of Measuring or Leak Detection Instrument | Location of Measuring Instrument (Tag No.) | Instrument Range | Expected Range | Fail States | Instrument Accuracy | Operating Trips (Description & Numerical Limits) | Instrument Calibration Method No. and Range |
|---|---|---|---|---|---|---|---|---|---|
| PWD-SUMP-00013[a] | Not Applicable | Radar Leak Detector | RESERVED | RESERVED | RESERVED | RESERVED | RESERVED | Not Applicable | RESERVED |
| PWD-SUMP-00026[c] | Not Applicable | RESERVED | RESERVED | RESERVED | RESERVED | RESERVED | RESERVED | Not Applicable | RESERVED |
| PWD-SUMP-00026[b] | Not Applicable | RESERVED | RESERVED | RESERVED | RESERVED | RESERVED | RESERVED | Not Applicable | RESERVED |
| PWD-SUMP-00028[c] | Not Applicable | Radar Leak Detector | RESERVED | RESERVED | RESERVED | RESERVED | RESERVED | Not Applicable | RESERVED |
| PWD-SUMP-00028[b] | Not Applicable | RESERVED | RESERVED | RESERVED | RESERVED | RESERVED | RESERVED | Not Applicable | RESERVED |
| PWD-SUMP-00029[c] | Not Applicable | RESERVED | RESERVED | RESERVED | RESERVED | RESERVED | RESERVED | Not Applicable | RESERVED |
| PWD-SUMP-00029[b] | Not Applicable | RESERVED | RESERVED | RESERVED | RESERVED | RESERVED | RESERVED | Not Applicable | RESERVED |
| PWD-SUMP-00031[a] | Not Applicable | Radar Leak Detector | RESERVED | RESERVED | RESERVED | RESERVED | RESERVED | Not Applicable | RESERVED |

**Table III.10.E.E – Pretreatment Plant Tank System Process and Leak Detection System Instruments and Parameters**

| Tank System Name and Locator (including P&ID) | Control Parameter | Type of Measuring or Leak Detection Instrument | Location of Measuring Instrument (Tag No.) | Instrument Range | Expected Range | Fail States | Instrument Accuracy | Operating Trips (Description & Numerical Limits) | Instrument Calibration Method No. and Range |
|---|---|---|---|---|---|---|---|---|---|
| PWD-SUMP-00032[c] | Not Applicable | RESERVED | RESERVED | RESERVED | RESERVED | RESERVED | RESERVED | Not Applicable | RESERVED |
| PWD-SUMP-00032[b] | Not Applicable | RESERVED | RESERVED | RESERVED | RESERVED | RESERVED | RESERVED | Not Applicable | RESERVED |
| PWD-SUMP-00033[c] | Not Applicable | RESERVED | RESERVED | RESERVED | RESERVED | RESERVED | RESERVED | Not Applicable | RESERVED |
| PWD-SUMP-00033[b] | Not Applicable | RESERVED | RESERVED | RESERVED | RESERVED | RESERVED | RESERVED | Not Applicable | RESERVED |
| PWD-SUMP-00034[a] | Not Applicable | Radar Leak Detector | RESERVED | RESERVED | RESERVED | RESERVED | RESERVED | Not Applicable | RESERVED |
| PWD-SUMP-00035[a] | Not Applicable | Radar Leak Detector | RESERVED | RESERVED | RESERVED | RESERVED | RESERVED | Not Applicable | RESERVED |
| PWD-SUMP-00036[a] | Not Applicable | Radar Leak Detector | RESERVED | RESERVED | RESERVED | RESERVED | RESERVED | Not Applicable | RESERVED |
| PWD-SUMP-00037[a] | Not Applicable | Radar Leak Detector | RESERVED | RESERVED | RESERVED | RESERVED | RESERVED | Not Applicable | RESERVED |
| RLD-SUMP-00003[a] | Not Applicable | Radar Leak Detector | RESERVED | RESERVED | RESERVED | RESERVED | RESERVED | Not Applicable | RESERVED |

**Table III.10.E.E – Pretreatment Plant Tank System Process and Leak Detection System Instruments and Parameters**

| Tank System Name and Locator (including P&ID) | Control Parameter | Type of Measuring or Leak Detection Instrument | Location of Measuring Instrument (Tag No.) | Instrument Range | Expected Range | Fail States | Instrument Accuracy | Operating Trips (Description & Numerical Limits) | Instrument Calibration Method No. and Range |
|---|---|---|---|---|---|---|---|---|---|
| PVP-BULGE-00001 | Not Applicable | Radar Leak Detector | RESERVED | RESERVED | RESERVED | RESERVED | RESERVED | Not Applicable | RESERVED |
| PVP-BULGE-00002 | Not Applicable | Radar Leak Detector | RESERVED | RESERVED | RESERVED | RESERVED | RESERVED | Not Applicable | RESERVED |
| TCP-BULGE-00004 | Not Applicable | Radar Leak Detector | RESERVED | RESERVED | RESERVED | RESERVED | RESERVED | Not Applicable | RESERVED |
| DIW-BULGE-00001 | Not Applicable | Radar Leak Detector | RESERVED | RESERVED | RESERVED | RESERVED | RESERVED | Not Applicable | RESERVED |
| DIW-BULGE-00002 | Not Applicable | Radar Leak Detector | RESERVED | RESERVED | RESERVED | RESERVED | RESERVED | Not Applicable | RESERVED |
| CRP-BULGE-00001 | Not Applicable | Radar Leak Detector | RESERVED | RESERVED | RESERVED | RESERVED | RESERVED | Not Applicable | RESERVED |
| CXP-BULGE-00004 | Not Applicable | Radar Leak Detector | RESERVED | RESERVED | RESERVED | RESERVED | RESERVED | Not Applicable | RESERVED |
| UFP-BULGE-00001 | Not Applicable | Radar Leak Detector | RESERVED | RESERVED | RESERVED | RESERVED | RESERVED | Not Applicable | RESERVED |

**Table III.10.E.E – Pretreatment Plant Tank System Process and Leak Detection System Instruments and Parameters**

| Tank System Name and Locator (including P&ID) | Control Parameter | Type of Measuring or Leak Detection Instrument | Location of Measuring Instrument (Tag No.) | Instrument Range | Expected Range | Fail States | Instrument Accuracy | Operating Trips (Description & Numerical Limits) | Instrument Calibration Method No. and Range |
|---|---|---|---|---|---|---|---|---|---|
| UFP-BULGE-00002 | Not Applicable | Radar Leak Detector | RESERVED | RESERVED | RESERVED | RESERVED | RESERVED | Not Applicable | RESERVED |
| UFP-BULGE-00005 | Not Applicable | Radar Leak Detector | RESERVED | RESERVED | RESERVED | RESERVED | RESERVED | Not Applicable | RESERVED |
| UFP-BULGE-00006 | Not Applicable | Radar Leak Detector | RESERVED | RESERVED | RESERVED | RESERVED | RESERVED | Not Applicable | RESERVED |
| PWD-LDB-00001 | Not Applicable | Thermal Dispersion Level Switch | RESERVED | RESERVED | RESERVED | RESERVED | RESERVED | Not Applicable | RESERVED |
| PWD-LDB-00002 | Not Applicable | Thermal Dispersion Level Switch | RESERVED | RESERVED | RESERVED | RESERVED | RESERVED | Not Applicable | RESERVED |
| PWD-LDB-00003 | Not Applicable | Thermal Dispersion Level Switch | RESERVED | RESERVED | RESERVED | RESERVED | RESERVED | Not Applicable | RESERVED |
| PWD-LDB-00004 | Not Applicable | Thermal Dispersion Level Switch | RESERVED | RESERVED | RESERVED | RESERVED | RESERVED | Not Applicable | RESERVED |
| PWD-LDB-00005 | Not Applicable | Thermal Dispersion Level Switch | RESERVED | RESERVED | RESERVED | RESERVED | RESERVED | Not Applicable | RESERVED |

**Table III.10.E.E – Pretreatment Plant Tank System Process and Leak Detection System Instruments and Parameters**

| Tank System Name and Locator (including P&ID) | Control Parameter | Type of Measuring or Leak Detection Instrument | Location of Measuring Instrument (Tag No.) | Instrument Range | Expected Range | Fail States | Instrument Accuracy | Operating Trips (Description & Numerical Limits) | Instrument Calibration Method No. and Range |
|---|---|---|---|---|---|---|---|---|---|
| PWD-LDB-00006 | Not Applicable | Thermal Dispersion Level Switch | RESERVED | RESERVED | RESERVED | RESERVED | RESERVED | Not Applicable | RESERVED |
| PWD-LDB-00007 | Not Applicable | Thermal Dispersion Level Switch | RESERVED | RESERVED | RESERVED | RESERVED | RESERVED | Not Applicable | RESERVED |
| PWD-LDB-00008 | Not Applicable | Thermal Dispersion Level Switch | RESERVED | RESERVED | RESERVED | RESERVED | RESERVED | Not Applicable | RESERVED |
| PWD-LDB-00009 | Not Applicable | Thermal Dispersion Level Switch | RESERVED | RESERVED | RESERVED | RESERVED | RESERVED | Not Applicable | RESERVED |
| PWD-LDB-00010 | Not Applicable | Thermal Dispersion Level Switch | RESERVED | RESERVED | RESERVED | RESERVED | RESERVED | Not Applicable | RESERVED |
| PWD-LDB-00011 | Not Applicable | Thermal Dispersion Level Switch | RESERVED | RESERVED | RESERVED | RESERVED | RESERVED | Not Applicable | RESERVED |
| PWD-LDB-00012 | Not Applicable | Thermal Dispersion Level Switch | RESERVED | RESERVED | RESERVED | RESERVED | RESERVED | Not Applicable | RESERVED |
| PWD-LDB-00013 | Not Applicable | Thermal Dispersion Level Switch | RESERVED | RESERVED | RESERVED | RESERVED | RESERVED | Not Applicable | RESERVED |

**Table III.10.E.E – Pretreatment Plant Tank System Process and Leak Detection System Instruments and Parameters**

| Tank System Name and Locator (including P&ID) | Control Parameter | Type of Measuring or Leak Detection Instrument | Location of Measuring Instrument (Tag No.) | Instrument Range | Expected Range | Fail States | Instrument Accuracy | Operating Trips (Description & Numerical Limits) | Instrument Calibration Method No. and Range |
|---|---|---|---|---|---|---|---|---|---|
| PWD-LDB-00014 | Not Applicable | Thermal Dispersion Level Switch | RESERVED | RESERVED | RESERVED | RESERVED | RESERVED | Not Applicable | RESERVED |
| PWD-LDB-00015 | Not Applicable | Thermal Dispersion Level Switch | RESERVED | RESERVED | RESERVED | RESERVED | RESERVED | Not Applicable | RESERVED |
| PWD-LDB-00016 | Not Applicable | Thermal Dispersion Level Switch | RESERVED | RESERVED | RESERVED | RESERVED | RESERVED | Not Applicable | RESERVED |
| PWD-LDB-00017 | Not Applicable | Thermal Dispersion Level Switch | RESERVED | RESERVED | RESERVED | RESERVED | RESERVED | Not Applicable | RESERVED |
| PWD-LDB-00018 | Not Applicable | Thermal Dispersion Level Switch | RESERVED | RESERVED | RESERVED | RESERVED | RESERVED | Not Applicable | RESERVED |
| PWD-LDB-00019 | Not Applicable | Thermal Dispersion Level Switch | RESERVED | RESERVED | RESERVED | RESERVED | RESERVED | Not Applicable | RESERVED |
| RLD-LDB-00012 | Not Applicable | Thermal Dispersion Level Switch | RESERVED | RESERVED | RESERVED | RESERVED | RESERVED | Not Applicable | RESERVED |
| RLD-LDB-00013 | Not Applicable | Thermal Dispersion Level Switch | RESERVED | RESERVED | RESERVED | RESERVED | RESERVED | Not Applicable | RESERVED |

**Table III.10.E.E – Pretreatment Plant Tank System Process and Leak Detection System Instruments and Parameters**

| Tank System Name and Locator (including P&ID) | Control Parameter | Type of Measuring or Leak Detection Instrument | Location of Measuring Instrument (Tag No.) | Instrument Range | Expected Range | Fail States | Instrument Accuracy | Operating Trips (Description & Numerical Limits) | Instrument Calibration Method No. and Range |
|---|---|---|---|---|---|---|---|---|---|
| ASX Sampler 00013 Lower Containment Drain | Not Applicable | Thermal Dispersion Level Switch | RESERVED | RESERVED | RESERVED | RESERVED | RESERVED | RESERVED | RESERVED |
| ASX Sampler 00017 Lower Containment Drain | Not Applicable | Thermal Dispersion Level Switch | RESERVED | RESERVED | RESERVED | RESERVED | RESERVED | RESERVED | RESERVED |
| ASX Sampler 00019 Lower Containment Drain | Not Applicable | Thermal Dispersion Level Switch | RESERVED | RESERVED | RESERVED | RESERVED | RESERVED | RESERVED | RESERVED |
| ASX Sampler 00020 Lower Containment Drain | Not Applicable | Thermal Dispersion Level Switch | RESERVED | RESERVED | RESERVED | RESERVED | RESERVED | RESERVED | RESERVED |
| ASX Sampler 00025 Lower Containment Drain | Not Applicable | Thermal Dispersion Level Switch | RESERVED | RESERVED | RESERVED | RESERVED | RESERVED | RESERVED | RESERVED |
| RESERVED | RESERVED | RESERVED | RESERVED | RESERVED | RESERVED | RESERVED | RESERVED | RESERVED | RESERVED |

**Table III.10.E.E – Pretreatment Plant Tank System Process and Leak Detection System Instruments and Parameters**

| Tank System Name and Locator (including P&ID) | Control Parameter | Type of Measuring or Leak Detection Instrument | Location of Measuring Instrument (Tag No.) | Instrument Range | Expected Range | Fail States | Instrument Accuracy | Operating Trips (Description & Numerical Limits) | Instrument Calibration Method No. and Range |
|---|---|---|---|---|---|---|---|---|---|

[a]Locator (including P&ID designator) is located on Permit Table III.10.E J – Pretreatment Plant Tank Systems Secondary Containment Systems Including Sumps and Floor Drains.

[b]Locator (including P&ID designator) is located on Permit Table III.10.E.I – Pretreatment Plant Tank Systems Primary Containment Systems.

[c]Leak detection instruments for secondary containment to a primary containment sump.

1

**Table III.10.E.F – LAW Vitrification Plant Tank System Process and Leak Detection System Instruments and Parameters**

| Tank System Name and Locator (including P&ID) | Control Parameter | Type of Measuring or Leak Detection Instrument | Location of Measuring Instrument (Tag No.) | Instrument Range | Expected Range | Fail States | Instrument Accuracy | Operating Trips (Description & Numerical Limits) | Instrument Calibration Method No. and Range |
|---|---|---|---|---|---|---|---|---|---|
| RLD-SUMP-00028[a] | Not Applicable | Radar Leak Detector | RESERVED | RESERVED | RESERVED | RESERVED | RESERVED | Not Applicable | RESERVED |
| RLD-SUMP-00029[a] | Not Applicable | Radar Leak Detector | RESERVED | RESERVED | RESERVED | RESERVED | RESERVED | Not Applicable | RESERVED |
| RLD-SUMP-00030[a] | Not Applicable | Radar Leak Detector | RESERVED | RESERVED | RESERVED | RESERVED | RESERVED | Not Applicable | RESERVED |
| RLD-SUMP-00031[a] | Not Applicable | Radar Leak Detector | RESERVED | RESERVED | RESERVED | RESERVED | RESERVED | Not Applicable | RESERVED |
| RLD-SUMP-00032[a] | Not Applicable | Radar Leak Detector | RESERVED | RESERVED | RESERVED | RESERVED | RESERVED | Not Applicable | RESERVED |
| RLD-SUMP-00035[a] | Not Applicable | Radar Leak Detector | RESERVED | RESERVED | RESERVED | RESERVED | RESERVED | Not Applicable | RESERVED |
| RLD-SUMP-00036[a] | Not Applicable | Radar Leak Detector | RESERVED | RESERVED | RESERVED | RESERVED | RESERVED | Not Applicable | RESERVED |
| LVP-FD-00001[a] | Not Applicable | Radar Leak Detector | RESERVED | RESERVED | RESERVED | RESERVED | RESERVED | Not Applicable | RESERVED |
| Melter 1 Encasement | Not Applicable | Conductivity Cable | RESERVED | RESERVED | RESERVED | RESERVED | RESERVED | RESERVED | RESERVED |

| | | | | | | | | | |
|---|---|---|---|---|---|---|---|---|---|
| Assembly Drain | | | | | | | | | |
| Melter 2 Encasement Assembly Drain | Not Applicable | Conductivity Cable | RESERVED | RESERVED | RESERVED | RESERVED | RESERVED | RESERVED | RESERVED |
| ASX Sampler 00012 Lower Containment Drain | Not Applicable | Thermal Dispersion Level Switch | RESERVED | RESERVED | RESERVED | RESERVED | RESERVED | RESERVED | RESERVED |
| ASX Sampler 00013 Lower Containment Drain | Not Applicable | Thermal Dispersion Level Switch | RESERVED | RESERVED | RESERVED | RESERVED | RESERVED | RESERVED | RESERVED |
| | | RESERVED | RESERVED | RESERVED | RESERVED | RESERVED | RESERVED | RESERVED | RESERVED |
| | | RESERVED | RESERVED | RESERVED | RESERVED | RESERVED | RESERVED | RESERVED | RESERVED |
| [a]Locator (including P&ID designator) is located on Permit Table III.10.E L - LAW Vitrification Plant Tank Systems Secondary Containment Systems Including Sumps and Floor Drains. | | | | | | | | | |

1

**Table III.10.E.G - HLW Vitrification Plant Tank System Process and Leak Detection System Instruments and Parameters**

| Tank System Name and Locator (including P&ID) | Control Parameter | Type of Measuring or Leak Detection Instrument | Location of Measuring Instrument (Tag No.) | Instrument Range | Expected Range | Fail States | Instrument Accuracy | Operating Trips (Description & Numerical Limits) | Instrument Calibration Method No. and Range |
|---|---|---|---|---|---|---|---|---|---|
| HCP-SUMP-00001[a] | Not Applicable | Radar Leak Detector | RESERVED | RESERVED | RESERVED | RESERVED | RESERVED | Not Applicable | RESERVED |
| RLD-SUMP-00001[a] | Not Applicable | Radar Leak Detector | RESERVED | RESERVED | RESERVED | RESERVED | RESERVED | Not Applicable | RESERVED |
| HOP-SUMP-00003[a] | Not Applicable | Radar Leak Detector | RESERVED | RESERVED | RESERVED | RESERVED | RESERVED | Not Applicable | RESERVED |
| HOP-SUMP-00008[a] | Not Applicable | Radar Leak Detector | RESERVED | RESERVED | RESERVED | RESERVED | RESERVED | Not Applicable | RESERVED |
| HDH-SUMP-00001[a] | Not Applicable | Radar Leak Detector | RESERVED | RESERVED | RESERVED | RESERVED | RESERVED | Not Applicable | RESERVED |
| HDH-SUMP-00002[a] | Not Applicable | Radar Leak Detector | RESERVED | RESERVED | RESERVED | RESERVED | RESERVED | Not Applicable | RESERVED |
| HDH-SUMP-00003[a] | Not Applicable | Radar Leak Detector | RESERVED | RESERVED | RESERVED | RESERVED | RESERVED | Not Applicable | RESERVED |
| HFP-SUMP-00002[a] | Not Applicable | Radar Leak Detector | RESERVED | RESERVED | RESERVED | RESERVED | RESERVED | Not Applicable | RESERVED |
| HFP-SUMP-00005[a] | Not Applicable | Radar Leak Detector | RESERVED | RESERVED | RESERVED | RESERVED | RESERVED | Not Applicable | RESERVED |
| HSH-SUMP-00003[a] | Not Applicable | Bubbler | RESERVED | RESERVED | RESERVED | RESERVED | RESERVED | Not Applicable | RESERVED |
| HSH-SUMP-00007[a] | Not Applicable | Bubbler | RESERVED | RESERVED | RESERVED | RESERVED | RESERVED | Not Applicable | RESERVED |

| | | | | | | | | | |
|---|---|---|---|---|---|---|---|---|---|
| HSH-SUMP-00008[a] | Not Applicable | Radar Leak Detector | RESERVED | RESERVED | RESERVED | RESERVED | RESERVED | Not Applicable | RESERVED |
| HSH-SUMP-00009[a] | Not Applicable | Radar Leak Detector | RESERVED | RESERVED | RESERVED | RESERVED | RESERVED | Not Applicable | RESERVED |
| HPH-SUMP-00001[a] | Not Applicable | Radar Leak Detector | RESERVED | RESERVED | RESERVED | RESERVED | RESERVED | Not Applicable | RESERVED |
| HPH-SUMP-00003[a] | Not Applicable | Radar Leak Detector | RESERVED | RESERVED | RESERVED | RESERVED | RESERVED | Not Applicable | RESERVED |
| HPH-SUMP-00005[a] | Not Applicable | Radar Leak Detector | RESERVED | RESERVED | RESERVED | RESERVED | RESERVED | Not Applicable | RESERVED |
| ASX Sampler 00028 Lower Containment Drain | Not Applicable | Thermal Dispersion Level Switch | RESERVED | RESERVED | RESERVED | RESERVED | RESERVED | Not Applicable | RESERVED |
| ASX Sampler 00029 Lower Containment Drain | Not Applicable | Thermal Dispersion Level Switch | RESERVED | RESERVED | RESERVED | RESERVED | RESERVED | Not Applicable | RESERVED |
| ASX Sampler 00042 Lower Containment Drain | Not Applicable | Thermal Dispersion Level Switch | RESERVED | RESERVED | RESERVED | RESERVED | RESERVED | Not Applicable | RESERVED |
| RESERVED | RESERVED | RESERVED | RESERVED | RESERVED | RESERVED | RESERVED | RESERVED | RESERVED | RESERVED |

[a]Locator (including P&ID designator) is located on Permit Table III.10.E. N - HLW Vitrification Plant Tank Systems Secondary Containment Systems Including Sumps, and Floor Drains.

1

**Table III.10.E.H – Laboratory Tank System Process and Leak Detection System Instruments and Parameters**

| Tank System Name and Locator (including P&ID) | Control Parameter | Type of Measuring or Leak Detection Instrument | Location of Measuring Instrument (Tag No.) | Instrument Range | Expected Range | Fail States | Instrument Accuracy | Operating Trips (Description & Numerical Limits) | Instrument Calibration Method No. and Range |
|---|---|---|---|---|---|---|---|---|---|
| RLD-SUMP-00041[a] | Not Applicable | Radar Leak Detector | RESERVED | RESERVED | RESERVED | RESERVED | RESERVED | Not Applicable | RESERVED |
| RLD-SUMP-00042[a] | Not Applicable | Radar Leak Detector | RESERVED | RESERVED | RESERVED | RESERVED | RESERVED | Not Applicable | RESERVED |
| RLD-SUMP-00043A[a] | Not Applicable | Radar Leak Detector | RESERVED | RESERVED | RESERVED | RESERVED | RESERVED | Not Applicable | RESERVED |
| RLD-SUMP-00043B[a] | Not Applicable | Radar Leak Detector | RESERVED | RESERVED | RESERVED | RESERVED | RESERVED | Not Applicable | RESERVED |
| RLD-SUMP-00044[a] | Not Applicable | Radar Leak Detector | RESERVED | RESERVED | RESERVED | RESERVED | RESERVED | Not Applicable | RESERVED |
| RLD-SUMP-00045[a] | Not Applicable | Radar Leak Detector | RESERVED | RESERVED | RESERVED | RESERVED | RESERVED | Not Applicable | RESERVED |
| RLD-LDB-00002[a] | Not Applicable | Thermal Dispersion Level Switch | RESERVED | RESERVED | RESERVED | RESERVED | RESERVED | Not Applicable | RESERVED |
| RLD-LDB-00004[a] | Not Applicable | Thermal Dispersion Level Switch | RESERVED | RESERVED | RESERVED | RESERVED | RESERVED | Not Applicable | RESERVED |
| RLD-LDB-00005[a] | Not Applicable | Thermal Dispersion Level Switch | RESERVED | RESERVED | RESERVED | RESERVED | RESERVED | Not Applicable | RESERVED |
| RLD-LDB-00006[a] | Not Applicable | Thermal Dispersion Level Switch | RESERVED | RESERVED | RESERVED | RESERVED | RESERVED | Not Applicable | RESERVED |

**Table III.10.E.H – Laboratory Tank System Process and Leak Detection System Instruments and Parameters**

| Tank System Name and Locator (including P&ID) | Control Parameter | Type of Measuring or Leak Detection Instrument | Location of Measuring Instrument (Tag No.) | Instrument Range | Expected Range | Fail States | Instrument Accuracy | Operating Trips (Description & Numerical Limits) | Instrument Calibration Method No. and Range |
|---|---|---|---|---|---|---|---|---|---|
| RLD-LDB-00007[a] | Not Applicable | Thermal Dispersion Level Switch | RESERVED | RESERVED | RESERVED | RESERVED | RESERVED | Not Applicable | RESERVED |
| RLD-LDB-00008[a] | Not Applicable | Thermal Dispersion Level Switch | RESERVED | RESERVED | RESERVED | RESERVED | RESERVED | Not Applicable | RESERVED |
| RLD-LDB-00009[a] | Not Applicable | Thermal Dispersion Level Switch | RESERVED | RESERVED | RESERVED | RESERVED | RESERVED | Not Applicable | RESERVED |
| RLD-LDB-00011[a] | Not Applicable | Thermal Dispersion Level Switch | RESERVED | RESERVED | RESERVED | RESERVED | RESERVED | Not Applicable | RESERVED |
| RESERVED | RESERVED | RESERVED | RESERVED | RESERVED | RESERVED | RESERVED | RESERVED | RESERVED | RESERVED |

[a]Locator (including P&ID designator) is located on Permit Table III.10.E P - Laboratory Tank Systems Secondary Containment Systems Including Sumps and Floor Drains.

1

**Table III.10.E.I – Pretreatment Plant Tank Systems Primary[a] Containment Sump Systems**

| Sump I.D.# & Room Location | Maximum Sump Capacity (gallons) | Sump Dimensions[b] (feet) & Materials of Construction | Engineering Description (Drawing Nos., Specifications Nos., etc.) |
|---|---|---|---|
| PWD-SUMP-00026<br>P-0123 (Hotcell El. 0) | RESERVED | RESERVED | RESERVED |
| PWD-SUMP-00028<br>P-0123 (Hotcell El. 0) | RESERVED | RESERVED | RESERVED |
| PWD-SUMP-00029<br>P-0123 (Hotcell El. 0) | RESERVED | RESERVED | RESERVED |
| PWD-SUMP-00032<br>P-0123A (Maintenance Cave, El. 0) | RESERVED | RESERVED | RESERVED |
| PWD-SUMP-00033<br>P-0123A (Maintenance Cave, El. 0) | RESERVED | RESERVED | RESERVED |

[a] Primary sumps are defined in Permit Section III.10.C, and must comply with dangerous waste tank system requirements for tanks as described in WAC-173-303-640.

[b]Dimensions listed are based on permitted design. Actual dimensions may vary within plus or minus (TBD).

1

**Table III.10.E.J – Pretreatment Plant Tank Systems Secondary Containment Systems, Including Sumps, Leak Detection Boxes, Bulges, Autosamplers, and Floor Drains**

| Sump, Bulge or Drain Line I.D.# & Room Location | Maximum Sump (gallons) Capacity | Sump Type/Nominal Operating Volume (gallons) | Sump, Bulge or Drain Line Dimensions[a] (inches) & Materials of Construction | Engineering Description (Drawing No.'s, Specifications No.'s, etc.) |
|---|---|---|---|---|
| PWD-SUMP-00071<br>P-B005 (Pit-19, El. –19') | 60 | Dry Sump | 30"Dia x 18"Deep<br>Epoxy | **24590-PTF**<br>-M6-PWD-00041, Rev 3<br>-P1-P01T-00006, Rev 4 |

**Table III.10.E.J – Pretreatment Plant Tank Systems Secondary Containment Systems, Including Sumps, Leak Detection Boxes, Bulges, Autosamplers, and Floor Drains**

| Sump, Bulge or Drain Line I.D.# & Room Location | Maximum Sump (gallons) Capacity | Sump Type/Nominal Operating Volume (gallons) | Sump, Bulge or Drain Line Dimensions[a] (inches) & Materials of Construction | Engineering Description (Drawing No.'s, Specifications No.'s, etc.) |
|---|---|---|---|---|
| PWD-SUMP-00040<br>P-B002 (Pit-45, El. –45') | 233.7 | Dry Sump | 60"x30"x30"<br>Stainless Steel | **24590-PTF**<br>-M6-PWD-00012, Rev 2<br>-P1-P01T-00006, Rev 4 |
| PWD-SUMP-00001<br>P-0108B (El. 0') | 75 | Dry Sump | 30" Dia. By ~27" deep<br>Stainless Steel | **24590-PTF**<br>-M6-PWD-00008, Rev 3<br>-P1-P01T-00001, Rev 8 |
| PWD-SUMP-00001A<br>P-0108C (El. 0') | 75 | Dry Sump | 30" Dia. By ~27" deep<br>Stainless Steel | **24590-PTF**<br>-M6-PWD-00010, Rev 3<br>-P1-P01T-00001, Rev 8 |
| PWD-SUMP-00002<br>P-0108A (El. 0') | 75 | Dry Sump | 30" Dia. By ~27" deep<br>Stainless Steel | **24590-PTF**<br>-M6-PWD-00008, Rev 3<br>-P1-P01T-00001, Rev 8 |
| PWD-SUMP-00002A<br>P-0108 (El. 0') | 75 | Dry Sump | 30" Dia. By ~27" deep<br>Stainless Steel | **24590-PTF**<br>-M6-PWD-00010, Rev 3<br>-P1-P01T-00001, Rev 8 |
| PWD-SUMP-00003<br>P-0106 (El. 0') | 75 | Dry Sump | 30" Dia. By ~27" deep<br>Stainless Steel | **24590-PTF**<br>-M6-PWD-00008, Rev 3<br>-P1-P01T-00001, Rev 8 |
| PWD-SUMP-00004<br>P-0104 (El. 0') | 75 | Dry Sump | 30" Dia. By ~27" deep<br>Stainless Steel | **24590-PTF**<br>-M6-PWD-00008, Rev 3<br>-P1-P01T-00001, Rev 8 |

**Table III.10.E.J – Pretreatment Plant Tank Systems Secondary Containment Systems, Including Sumps, Leak Detection Boxes, Bulges, Autosamplers, and Floor Drains**

| Sump, Bulge or Drain Line I.D.# & Room Location | Maximum Sump (gallons) Capacity | Sump Type/Nominal Operating Volume (gallons) | Sump, Bulge or Drain Line Dimensions[a] (inches) & Materials of Construction | Engineering Description (Drawing No.'s, Specifications No.'s, etc.) |
|---|---|---|---|---|
| PWD-SUMP-00005<br>P-0102A (El. 0') | 75 | Dry Sump | 30" Dia. By ~27" deep<br>Stainless Steel | **24590-PTF**<br>-M6-PWD-00008, Rev 3<br>-P1-P01T-00001, Rev 8 |
| PWD-SUMP-00006<br>P-0102 (El. 0') | 75 | Dry Sump | 30" Dia. By ~27" deep<br>Stainless Steel | **24590-PTF**<br>-M6-PWD-00008, Rev 3<br>-P1-P01T-00001, Rev 8 |
| PWD-SUMP-00007<br>P-0109 (El. 0') | 75 | Dry Sump | 30" Dia. By ~27" deep<br>Stainless Steel | **24590-PTF**<br>-M6-PWD-00009, Rev 3<br>-P1-P01T-00001, Rev 8 |
| PWD-SUMP-00008<br>P-0111 (El. 0') | 75 | Dry Sump | 30" Dia. By ~27" deep<br>Stainless Steel | **24590-PTF**<br>-M6-PWD-00009, Rev 3<br>-P1-P01T-00001, Rev 8 |
| PWD-SUMP-00009<br>P-0112 (El. 0') | 75 | Dry Sump | 30" Dia. By ~27" deep<br>Stainless Steel | **24590-PTF**<br>-M6-PWD-00009, Rev 3<br>-P1-P01T-00001, Rev 8 |
| PWD-SUMP-00010<br>P-0113 (El. 0') | 75 | Dry Sump | 30" Dia. By ~27" deep<br>Stainless Steel | **24590-PTF**<br>-M6-PWD-00009, Rev 3<br>-P1-P01T-00001, Rev 8 |
| PWD-SUMP-00011<br>P-0114 (El. 0') | 75 | Dry Sump | 30" Dia. By ~27" deep<br>Stainless Steel | **24590-PTF**<br>-M6-PWD-00009, Rev 3<br>-P1-P01T-00001, Rev 8 |

**Table III.10.E.J – Pretreatment Plant Tank Systems Secondary Containment Systems, Including Sumps, Leak Detection Boxes, Bulges, Autosamplers, and Floor Drains**

| Sump, Bulge or Drain Line I.D.# & Room Location | Maximum Sump (gallons) Capacity | Sump Type/Nominal Operating Volume (gallons) | Sump, Bulge or Drain Line Dimensions[a] (inches) & Materials of Construction | Engineering Description (Drawing No.'s, Specifications No.'s, etc.) |
|---|---|---|---|---|
| PWD-SUMP-00012<br>P-0117 (El. 0') | 75 | Dry Sump | 30" Dia. By ~27" deep<br>Stainless Steel | **24590-PTF**<br>-M6-PWD-00009, Rev 3<br>-P1-P01T-00001, Rev 8 |
| PWD-SUMP-00013<br>P-0117A (El. 0') | 75 | Dry Sump | 30" Dia. By ~27" deep<br>Stainless Steel | **24590-PTF**<br>-M6-PWD-00014, Rev 3<br>-P1-P01T-00001, Rev 8 |
| RESERVED | RESERVED | RESERVED | RESERVED | RESERVED |
| RESERVED | RESERVED | RESERVED | RESERVED | RESERVED |
| RESERVED | RESERVED | RESERVED | RESERVED | RESERVED |
| PWD-SUMP-00031<br>P-0119 (El. 0') | 75 | Dry Sump | 30" Dia. By ~27" deep<br>Stainless Steel | **24590-PTF**<br>-M6-PWD-00010, Rev 3<br>-P1-P01T-00001, Rev 8 |
| RESERVED | RESERVED | RESERVED | RESERVED | RESERVED |
| RESERVED | RESERVED | RESERVED | RESERVED | RESERVED |
| PWD-SUMP-00034<br>P-0121A (Spent Resin Dewatering, El. 0') | 75 | Dry Sump | 30" Dia. x 27" Deep<br>Stainless Steel | **24590-PTF**<br>-M6-PWD-00012, Rev 2 |
| PWD-SUMP-00035<br>P-0122A (Waste Packaging Area, El. 0') | 75 | Dry Sump | 30" Dia. x 27" Deep<br>Stainless Steel | **24590-PTF**<br>-M6-PWD-00012, Rev 2 |

**Table III.10.E.J – Pretreatment Plant Tank Systems Secondary Containment Systems, Including Sumps, Leak Detection Boxes, Bulges, Autosamplers, and Floor Drains**

| Sump, Bulge or Drain Line I.D.# & Room Location | Maximum Sump (gallons) Capacity | Sump Type/Nominal Operating Volume (gallons) | Sump, Bulge or Drain Line Dimensions[a] (inches) & Materials of Construction | Engineering Description (Drawing No.'s, Specifications No.'s, etc.) |
|---|---|---|---|---|
| PWD-SUMP-00036<br>P-0118 (El. 0') | 75 | Dry Sump | 30" Dia. By ~27" deep<br>Stainless Steel | **24590-PTF**<br>-M6-PWD-P0012, Rev 2<br>-P1-P01T-00001, Rev 8 |
| PWD-SUMP-00037<br>P-0124A | 7.5 | | 30" Dia. x 27" Deep<br>Stainless Steel | **24590-PTF**<br>-M6-PWD-00012, Rev 2 |
| RLD-SUMP-00003<br>P-0150 (Radioactive Liquid Waste Disposal Area, El. 0', outdoor) | 583 | Dry Sump | 78" x 48" x 36" Deep<br>Epoxy coating | **24590-PTF**<br>-M6-RLD-00002003, Rev 0 |
| PVP-ZY-00037-S11B-03, P-0105 (PVP-BULGE-00001, El. 0') | | | 3"<br>Stainless Steel | **24590-PTF**<br>-M6-PVP-00017002, Rev 0 |
| PVP-ZY-00036-S11B-03, P-0101A (PVP-BULGE-00002, El. 0') | | | 3"<br>Stainless Steel | **24590-PTF**<br>-M6-PVP-00018002, Rev 0 |
| TCP-ZF-00032-S11B-03 Drain Line, P-0116 (TCP-BULGE-00004, El. 0') | N/A | N/A | 3"<br>Stainless Steel | **24590-PTF**<br>-M6-TCP-00001002, Rev 1 |
| DIW-ZF-01511-S11B-03 Drain Line, P-0320 (DIW-BULGE-00001, El. 56') | N/A | N/A | 3"<br>Stainless Steel | **24590-PTF**<br>-M6-DIW-00004001 |
| DIW-ZF-01510-S11B-03, P-0320 Drain Line (DIW-BULGE-00002, El. 56') | N/A | N/A | 3"<br>Stainless Steel | **24590-PTF**<br>-M6-DIW-00004001 |

**Table III.10.E.J – Pretreatment Plant Tank Systems Secondary Containment Systems, Including Sumps, Leak Detection Boxes, Bulges, Autosamplers, and Floor Drains**

| Sump, Bulge or Drain Line I.D.# & Room Location | Maximum Sump (gallons) Capacity | Sump Type/Nominal Operating Volume (gallons) | Sump, Bulge or Drain Line Dimensions[a] (inches) & Materials of Construction | Engineering Description (Drawing No.'s, Specifications No.'s, etc.) |
|---|---|---|---|---|
| PWD-FD-00005<br>PWD-ZF-03000-S11B-06<br>P-0123 (Hotcell, El.0') | 939 | N/A | 6" Dia.<br>Stainless Steel | **24590-PTF**<br>-M6-PWD-00011, Rev 2 |
| PWD-FD-00006<br>PWD-ZF-03001-S11B-06<br>P-0123 (Hotcell, El.0') | 939 | N/A | 6" Dia.<br>Stainless Steel | **24590-PTF**<br>-M6-PWD-00011, Rev 2 |
| PWD-FD-00435<br>P-0105 | | NA | 3" Dia.<br>Stainless Steel | **24590-PTF**<br>-M6-PWD-00044, Rev 3 |
| PWD-FD-00349<br>P-0105 | | NA | 6" Dia.<br>Stainless Steel | **24590-PTF**<br>-M6-PWD-00044, Rev 3 |
| PWD-FD-00436<br>P-0105 | | NA | 3" Dia.<br>Stainless Steel | **24590-PTF**<br>-M6-PWD-00044, Rev 3 |
| PWD-FD-00438<br>P-0105A | | NA | 6" Dia.<br>Stainless Steel | **24590-PTF**<br>-M6-PWD-00044, Rev 3 |
| PWD-FD-00348<br>P-0105A | | NA | 6" Dia.<br>Stainless Steel | **24590-PTF**<br>-M6-PWD-00044, Rev 3 |
| PWD-FD-00437<br>P-0105B | | NA | 3" Dia.<br>Stainless Steel | **24590-PTF**<br>-M6-PWD-00044, Rev 3 |
| PWD-FD-347<br>P-0105B | | NA | 6" Dia.<br>Stainless Steel | **24590-PTF**<br>-M6-PWD-00044, Rev 3 |
| PWD-FD-346<br>P-0105C | | NA | 4" Dia.<br>Stainless Steel | **24590-PTF**<br>-M6-PWD-00044, Rev 3 |

**Table III.10.E.J – Pretreatment Plant Tank Systems Secondary Containment Systems, Including Sumps, Leak Detection Boxes, Bulges, Autosamplers, and Floor Drains**

| Sump, Bulge or Drain Line I.D.# & Room Location | Maximum Sump (gallons) Capacity | Sump Type/Nominal Operating Volume (gallons) | Sump, Bulge or Drain Line Dimensions[a] (inches) & Materials of Construction | Engineering Description (Drawing No.'s, Specifications No.'s, etc.) |
|---|---|---|---|---|
| PWD-FD-00293<br>P-0426 Drain, El. 77' | 140 | N/A | 6" Dia<br>304L | **24590-PTF**<br>-M6-PWD-00044, Rev 3 |
| PWD-FD-00298<br>P-0425 Drain, El. 77' | 140 | N/A | 6" Dia<br>304L | **24590-PTF**<br>-M6-PWD-00044, Rev 3 |
| PWD-FD-00309<br>P-0402 Drain, El. 77' | 655 | N/A | 8" Dia<br>304L | **24590-PTF**<br>-M6-PWD-00044, Rev 3 |
| PWD-FD-00310<br>P-0402 Drain, El. 77' | 140 | N/A | 6" Dia<br>304L | **24590-PTF**<br>-M6-PWD-00044, Rev 3 |
| PWD-FD-00311<br>P-0402 Drain, El. 77' | 140 | N/A | 6" Dia<br>304L | **24590-PTF**<br>-M6-PWD-00044, Rev 3 |
| PWD-FD-00312<br>P-0402 Drain, El. 77' | 655 | N/A | 8" Dia<br>304L | **24590-PTF**<br>-M6-PWD-00044, Rev 3 |
| PWD-FD-00376<br>P-0415 Drain, El. 77' | 655 | N/A | 8" Dia<br>304L | **24590-PTF**<br>-M6-PWD-00043, Rev 3 |
| PWD-FD-00377<br>P-0415 Drain, El. 77' | 140 | N/A | 6" Dia<br>304L | **24590-PTF**<br>-M6-PWD-00043, Rev 3 |
| PWD-FD-00378<br>P-0415 Drain, El. 77' | 140 | N/A | 6" Dia<br>304L | **24590-PTF**<br>-M6-PWD-00043, Rev 3 |
| PWD-FD-00379<br>P-0415 Drain, El. 77' | 140 | N/A | 6" Dia<br>304L | **24590-PTF**<br>-M6-PWD-00043, Rev 3 |
| PWD-FD-00380<br>P-0415A Drain, El. 77' | 140 | N/A | 6" Dia<br>304L | **24590-PTF**<br>-M6-PWD-00043, Rev 3 |

**Table III.10.E.J – Pretreatment Plant Tank Systems Secondary Containment Systems, Including Sumps, Leak Detection Boxes, Bulges, Autosamplers, and Floor Drains**

| Sump, Bulge or Drain Line I.D.# & Room Location | Maximum Sump (gallons) Capacity | Sump Type/Nominal Operating Volume (gallons) | Sump, Bulge or Drain Line Dimensions[a] (inches) & Materials of Construction | Engineering Description (Drawing No.'s, Specifications No.'s, etc.) |
|---|---|---|---|---|
| PWD-FD-00381<br>P-0415A Drain, El. 77' | 140 | N/A | 6" Dia<br>304L | **24590-PTF**<br>-M6-PWD-00043, Rev 3 |
| PWD-FD-00382<br>P-0415A Drain, El. 77' | 655 | N/A | 8" Dia<br>304L | **24590-PTF**<br>-M6-PWD-00043, Rev 3 |
| PWD-FD-00383<br>P-0415A Drain, El. 77' | 140 | N/A | 6" Dia<br>304L | **24590-PTF**<br>-M6-PWD-00043, Rev 3 |
| PWD-FD-00557<br>P-0430 Drain, El. 77' | 140 | N/A | 6" Dia<br>304L | **24590-PTF**<br>-M6-PWD-00043, Rev 3 |
| PWD-FD-00559<br>P-0430 Drain, El. 77' | 665 | N/A | 8" Dia<br>304L | **24590-PTF**<br>-M6-PWD-00043, Rev 3 |
| PWD-FD-00561<br>P-0430 Drain, El. 77' | 140 | N/A | 6" Dia<br>304L | **24590-PTF**<br>-M6-PWD-00043, Rev 3 |
| PWD-FD-00563<br>P-0411 Drain, El. 77' | 665 | N/A | 8" Dia<br>304L | **24590-PTF**<br>-M6-PWD-00043, Rev 3 |
| PWD-FD-00564<br>P-0411 Drain, El. 77' | 140 | N/A | 6" Dia<br>304L | **24590-PTF**<br>-M6-PWD-00043, Rev 3 |
| PWD-FD-00565<br>P-0410 Drain, El. 77' | 665 | N/A | 8" Dia<br>304L | **24590-PTF**<br>-M6-PWD-00043, Rev 3 |
| PWD-FD-00566<br>P-0410 Drain, El. 77' | 665 | N/A | 8" Dia<br>304L | **24590-PTF**<br>-M6-PWD-00043, Rev 3 |
| PWD-FD-00571<br>P-0410 Drain, El. 77' | 140 | N/A | 6" Dia<br>304L | **24590-PTF**<br>-M6-PWD-00044, Rev 3 |

**Table III.10.E.J – Pretreatment Plant Tank Systems Secondary Containment Systems, Including Sumps, Leak Detection Boxes, Bulges, Autosamplers, and Floor Drains**

| Sump, Bulge or Drain Line I.D.# & Room Location | Maximum Sump (gallons) Capacity | Sump Type/Nominal Operating Volume (gallons) | Sump, Bulge or Drain Line Dimensions[a] (inches) & Materials of Construction | Engineering Description (Drawing No.'s, Specifications No.'s, etc.) |
|---|---|---|---|---|
| PWD-FD-00572<br>P-0410 Drain, El. 77' | 140 | N/A | 6" Dia<br>304L | **24590-PTF**<br>-M6-PWD-00044, Rev 3 |
| PWD-FD-00573<br>P-0410 Drain, El. 77' | 140 | N/A | 6" Dia<br>304L | **24590-PTF**<br>-M6-PWD-00044, Rev 3 |
| PWD-FD-00574<br>P-0410 Drain, El. 77' | 140 | N/A | 6" Dia<br>304L | **24590-PTF**<br>-M6-PWD-00044, Rev 3 |
| PWD-FD-00575<br>P-0410 Drain, El. 77' | 140 | N/A | 6" Dia<br>304L | **24590-PTF**<br>-M6-PWD-00044, Rev 3 |
| PWD-FD-00576<br>P-0410 Drain, El. 77' | 140 | N/A | 6" Dia<br>304L | **24590-PTF**<br>-M6-PWD-00044, Rev 3 |
| PWD-FD-00583<br>P-0422A Drain, El. 77' | 655 | N/A | 8" Dia<br>304L | **24590-PTF**<br>-M6-PWD-00044, Rev 3 |
| PWD-FD-00584<br>P-0422A Drain, El. 77' | 140 | N/A | 6" Dia<br>304L | **24590-PTF**<br>-M6-PWD-00044, Rev 3 |
| PWD-FD-00589<br>P-0402 Drain, El. 77' | 140 | N/A | 6" Dia<br>304L | **24590-PTF**<br>-M6-PWD-00044, Rev 3 |
| PWD-FD-00590<br>P-0423 Drain, El. 77' | 655 | N/A | 8" Dia<br>304L | **24590-PTF**<br>-M6-PWD-00044, Rev 3 |
| PWD-FD-00591<br>P-0423 Drain, El. 77' | 655 | N/A | 8" Dia<br>304L | **24590-PTF**<br>-M6-PWD-00044, Rev 3 |
| PWD-FD-00592<br>P-0423 Drain, El. 77' | 655 | N/A | 8" Dia<br>304L | **24590-PTF**<br>-M6-PWD-00044, Rev 3 |

**Table III.10.E.J – Pretreatment Plant Tank Systems Secondary Containment Systems, Including Sumps, Leak Detection Boxes, Bulges, Autosamplers, and Floor Drains**

| Sump, Bulge or Drain Line I.D.# & Room Location | Maximum Sump (gallons) Capacity | Sump Type/Nominal Operating Volume (gallons) | Sump, Bulge or Drain Line Dimensions[a] (inches) & Materials of Construction | Engineering Description (Drawing No.'s, Specifications No.'s, etc.) |
|---|---|---|---|---|
| PWD-FD-00593<br>P-0423 Drain, El. 77' | 140 | N/A | 6" Dia<br>304L | **24590-PTF**<br>-M6-PWD-00044, Rev 3 |
| PWD-FD-00594<br>P-0423 Drain, El. 77' | 655 | N/A | 8" Dia<br>304L | **24590-PTF**<br>-M6-PWD-00044, Rev 3 |
| PWD-FD-00595<br>P-0431A Drain, El. 77' | 140 | N/A | 6" Dia<br>304L | **24590-PTF**<br>-M6-PWD-00044, Rev 3 |
| PWD-FD-00596<br>P-0431A Drain, El. 77' | 140 | N/A | 6" Dia<br>304L | **24590-PTF**<br>-M6-PWD-00044, Rev 3 |
| PWD-FD-00597<br>P-0431A Drain, El. 77' | 140 | N/A | 6" Dia<br>304L | **24590-PTF**<br>-M6-PWD-00044, Rev 3 |
| PWD-FD-00598<br>P-0431A Drain, El. 77' | 655 | N/A | 8" Dia<br>304L | **24590-PTF**<br>-M6-PWD-00044, Rev 3 |
| PWD-FD-00599<br>P-0431A Drain, El. 77' | 655 | N/A | 8" Dia<br>304L | **24590-PTF**<br>-M6-PWD-00044, Rev 3 |
| PWD-FD-00600<br>P-0431A Drain, El. 77' | 655 | N/A | 8" Dia<br>304L | **24590-PTF**<br>-M6-PWD-00044, Rev 3 |
| PWD-FD-00604<br>P-0431A Drain, El. 77' | 140 | N/A | 6" Dia<br>304L | **24590-PTF**<br>-M6-PWD-00044, Rev 3 |
| PWD-FD-00605<br>P-0431A Drain, El. 77' | 140 | N/A | 6" Dia<br>304L | **24590-PTF**<br>-M6-PWD-00044, Rev 3 |
| PWD-FD-00606<br>P-0431A Drain, El. 77' | 140 | N/A | 6" Dia<br>304L | **24590-PTF**<br>-M6-PWD-00044, Rev 3 |

**Table III.10.E.J – Pretreatment Plant Tank Systems Secondary Containment Systems, Including Sumps, Leak Detection Boxes, Bulges, Autosamplers, and Floor Drains**

| Sump, Bulge or Drain Line I.D.# & Room Location | Maximum Sump (gallons) Capacity | Sump Type/Nominal Operating Volume (gallons) | Sump, Bulge or Drain Line Dimensions[a] (inches) & Materials of Construction | Engineering Description (Drawing No.'s, Specifications No.'s, etc.) |
|---|---|---|---|---|
| PWD-FD-00607<br>P-0431A Drain, El. 77' | 140 | N/A | 6" Dia<br>304L | **24590-PTF**<br>-M6-PWD-00044, Rev 3 |
| PWD-FD-00629<br>P-0425 Drain, El. 77' | 655 | N/A | 8" Dia<br>304L | **24590-PTF**<br>-M6-PWD-00044, Rev 3 |
| PWD-FD-00630<br>P-0425 Drain, El. 77' | 140 | N/A | 8" Dia<br>304L | **24590-PTF**<br>-M6-PWD-00044, Rev 3 |
| CRP-ZF-00002-S11B-03, P-0317 Drain Line (CRP-BULGE-00001 drain, El. 56') | N/A | N/A | 3"<br>Stainless Steel | **24590-PTF**<br>-M6-CRP-00003001, Rev 0 |
| CXP-ZF-00012-S11B-03 Drain Line, P-0317 (CXP-BULGE-00004, El. 56') | N/A | N/A | 3"<br>Stainless Steel | **24590-PTF**<br>-M6-CXP-00003003, Rev 0 |
| UFP-ZF-00043-S11B-03 Drain Line, P-0301 (UFP-BULGE-00001, El. 56') | N/A | N/A | 3"<br>Stainless Steel | **24590-PTF**<br>-M6-UFP-00016001, Rev 0 |
| UFP-ZF-00042-S11B-03 Drain Line, P-0301 (UFP-BULGE-00002, El. 56') | N/A | N/A | 3"<br>Stainless Steel | **24590-PTF**<br>-M6-UFP-00017001, Rev 0 |
| UFP-ZY-00002-S11B-03 Drain Line, P-0311 (UFP-BULGE-00005, El. 56') | N/A | N/A | 3"<br>Stainless Steel | **24590-PTF**<br>-M56-UFP-00031001, Rev 0 |
| UFP-ZY-00001-S11B-03 Drain Line, P-0311A (UFP-BULGE-00006, El. 56') | N/A | N/A | 3"<br>Stainless Steel | **24590-PTF**<br>-M6-UFP-00032001, Rev 0 |

**Table III.10.E.J – Pretreatment Plant Tank Systems Secondary Containment Systems, Including Sumps, Leak Detection Boxes, Bulges, Autosamplers, and Floor Drains**

| Sump, Bulge or Drain Line I.D.# & Room Location | Maximum Sump (gallons) Capacity | Sump Type/Nominal Operating Volume (gallons) | Sump, Bulge or Drain Line Dimensions[a] (inches) & Materials of Construction | Engineering Description (Drawing No.'s, Specifications No.'s, etc.) |
|---|---|---|---|---|
| PWD-LDB-00001<br>P-B001 (Inter Facility Transfer Line Tunnel, El.-45') | 6 | N/A | 8" Dia. x 24" Length<br>Stainless Steel | **24590-PTF**<br>-M6-PWD-00050, Rev 2 |
| PWD-LDB-00002<br>P-B001 (Inter Facility Transfer Line Tunnel, El.-45') | 6 | N/A | 8" Dia. x 24" Length<br>Stainless Steel | **24590-PTF**<br>-M6-PWD-00050, Rev 2 |
| PWD-LDB-00003<br>P-B001 (Inter Facility Transfer Line Tunnel, El.-45') | 6 | N/A | 8" Dia. x 24" Length<br>Stainless Steel | **24590-PTF**<br>-M6-PWD-00050, Rev 2 |
| PWD-LDB-00004<br>P-B001 (Inter Facility Transfer Line Tunnel, El.-45') | 6 | N/A | 8" Dia. x 24" Length<br>Stainless Steel | **24590-PTF**<br>-M6-PWD-00050, Rev 2 |
| PWD-LDB-00005<br>P-B001 (Inter Facility Transfer Line Tunnel, El.-45') | 6 | N/A | 8" Dia. x 24" Length<br>Stainless Steel | **24590-PTF**<br>-M6-PWD-00050, Rev 2 |
| PWD-LDB-00006<br>P-B001 (Inter Facility Transfer Line Tunnel, El.-45') | 6 | N/A | 8" Dia. x 24" Length<br>Stainless Steel | **24590-PTF**<br>-M6-PWD-00050, Rev 2 |
| PWD-LDB-00007<br>P-B001 (Inter Facility Transfer Line Tunnel, El.-45') | 6 | N/A | 8" Dia. x 24" Length<br>Stainless Steel | **24590-PTF**<br>-M6-PWD-00050, Rev 2 |
| PWD-LDB-00008<br>P-B001 (Inter Facility Transfer Line Tunnel, El.-45') | 6 | N/A | 8" Dia. x 24" Length<br>Stainless Steel | **24590-PTF**<br>-M6-PWD-00050, Rev 2 |

**Table III.10.E.J – Pretreatment Plant Tank Systems Secondary Containment Systems, Including Sumps, Leak Detection Boxes, Bulges, Autosamplers, and Floor Drains**

| Sump, Bulge or Drain Line I.D.# & Room Location | Maximum Sump (gallons) Capacity | Sump Type/Nominal Operating Volume (gallons) | Sump, Bulge or Drain Line Dimensions[a] (inches) & Materials of Construction | Engineering Description (Drawing No.'s, Specifications No.'s, etc.) |
|---|---|---|---|---|
| PWD-LDB-00009<br>P-B001 (Inter Facility Transfer Line Tunnel, El. -45') | 6 | N/A | 8" Dia. x 24" Length<br>Stainless Steel | **24590-PTF**<br>-M6-PWD-00050, Rev 2 |
| PWD-LDB-00010<br>P-B001 (Inter Facility Transfer Line Tunnel, El.-45') | 6 | N/A | 8" Dia. x 24" Length<br>Stainless Steel | **24590-PTF**<br>-M6-PWD-00050, Rev 2 |
| PWD-LDB-00011<br>P-B001 (Inter Facility Transfer Line Tunnel, El.-45') | 6 | N/A | 8" Dia. x 24" Length<br>Stainless Steel | **24590-PTF**<br>-M6-PWD-00050, Rev 2 |
| PWD-LDB-00012<br>P-B001 (Inter Facility Transfer Line Tunnel, El.-45') | 6 | N/A | 8" Dia. x 24" Length<br>Stainless Steel | **24590-PTF**<br>-M6-PWD-00051, Rev 2 |
| PWD-LDB-00013<br>P-B001 (Inter Facility Transfer Line Tunnel, El.-45') | 6 | N/A | 8" Dia. x 24" Length<br>Stainless Steel | **24590-PTF**<br>-M6-PWD-00051, Rev 2 |
| PWD-LDB-00014<br>P-B001 (Inter Facility Transfer Line Tunnel, El.-45') | 6 | N/A | 8" Dia. x 24" Length<br>Stainless Steel | **24590-PTF**<br>-M6-PWD-00051, Rev 2 |
| PWD-LDB-00015<br>P-B001 (Inter Facility Transfer Line Tunnel, El.-45') | 6 | N/A | 8" Dia. x 24" Length<br>Stainless Steel | **24590-PTF**<br>-M6-PWD-00051, Rev 2 |
| PWD-LDB-00016<br>P-B001 (Inter Facility Transfer Line Tunnel, El. -45') | 6 | N/A | 8" Dia. x 24" Length/<br>Stainless Steel | **24590-PTF**<br>-M6-PWD-00051, Rev 2 |

**Table III.10.E.J – Pretreatment Plant Tank Systems Secondary Containment Systems, Including Sumps, Leak Detection Boxes, Bulges, Autosamplers, and Floor Drains**

| Sump, Bulge or Drain Line I.D.# & Room Location | Maximum Sump (gallons) Capacity | Sump Type/Nominal Operating Volume (gallons) | Sump, Bulge or Drain Line Dimensions[a] (inches) & Materials of Construction | Engineering Description (Drawing No.'s, Specifications No.'s, etc.) |
|---|---|---|---|---|
| PWD-LDB-00017<br>P-B001 (Inter Facility Transfer Line Tunnel, El. -45') | 6 | N/A | 8" Dia. x 24" Length/<br>Stainless Steel | **24590-PTF**<br>-M6-PWD-00051, Rev 2 |
| PWD-LDB-00018<br>P-B001 (Inter Facility Transfer Line Tunnel, El. -45') | 6 | N/A | 8" Dia. x 24" Length/ Stainless Steel | **24590-PTF**<br>-M6-PWD-00051, Rev 2 |
| PWD-LDB-00019<br>P-B001 (Inter Facility Transfer Line Tunnel, El. -45') | 6 | N/A | 8" Dia. x 24" Length/<br>Stainless Steel | **24590-PTF**<br>-M6-PWD-00051, Rev 2 |
| RLD-LDB-00012<br>P-B001 (Inter Facility Transfer Line Tunnel, El. -45') | 6 | N/A | 8" Dia. x 34" Length/<br>Stainless Steel | **24590-PTF**<br>-M6-PWD-00058001, Rev 0 and 00058002, Rev 0 |
| RLD-LDB-00013<br>P-B001 (Inter Facility Transfer Line Tunnel, El.-45') | 6 | N/A | 8" Dia. x 34" Length/<br>Stainless Steel | **24590-PTF**<br>-M6-PWD-00058001, Rev 0 and 00058002, Rev 0 |
| ASX Sampler 00017 Lower Containment Trough/Dam<br>(P-0311B, El. 56') | N/A | N/A | 3" Dia.<br>Stainless Steel | **24590-PTF**<br>-M6-PWD-00007, Rev 3 |
| ASX Sampler 00019 Lower Containment Trough/Dam<br>(P-0302, El. 56') | N/A | N/A | 3" Dia.<br>Stainless Steel | **24590-PTF**<br>-M6-PWD-00007, Rev 3 |
| ASX Sampler 00020 Lower Containment Trough/Dam<br>(P-0301, El. 56') | N/A | N/A | 3" Dia.<br>Stainless Steel | **24590-PTF**<br>-M6-PWD-00007, Rev 3 |

**Table III.10.E.J – Pretreatment Plant Tank Systems Secondary Containment Systems, Including Sumps, Leak Detection Boxes, Bulges, Autosamplers, and Floor Drains**

| Sump, Bulge or Drain Line I.D.# & Room Location | Maximum Sump (gallons) Capacity | Sump Type/Nominal Operating Volume (gallons) | Sump, Bulge or Drain Line Dimensions[a] (inches) & Materials of Construction | Engineering Description (Drawing No.'s, Specifications No.'s, etc.) |
|---|---|---|---|---|
| ASX Sampler 00025 Lower Containment Trough/Dam (P-0307, El. 56') | N/A | N/A | 3" Dia. Stainless Steel | **24590-PTF** -M6-PWD-00007, Rev 3 |
| [a]Dimensions listed are based on permitted design. Actual dimensions may vary within plus or minus (TBD). Note #1: These are special cases due to their location in equipment berms. The capacity for these drain lines is based on a unique bounding case for liquid spillage. | | | | |

1

**Table III.10.E.K - LAW Vitrification Plant Tank Systems Primary[a] Containment Sump Systems**

| Sump I.D.# & Room Location | Maximum Sump Capacity (gallons) | Sump Dimensions[b] (feet) & Materials of Construction | Engineering Description (Drawing Nos., Specifications Nos., etc.) |
|---|---|---|---|
| RESERVED | RESERVED | RESERVED | RESERVED |
| [a] Primary sumps are defined in Permit Section III.10.C, and must comply with dangerous waste tank system requirements for tanks as described in WAC-173-303-640. [b]Dimensions listed are based on permitted design. Actual dimensions may vary within plus or minus (TBD). | | | |

2

**Table III.10.E.L - LAW Vitrification Plant Tank Systems Secondary Containment Systems, Including Sumps, Bulges, Autosamplers, and Floor Drains**

| Sump or Drain Line I.D.# & Room Location | Maximum Sump (gallons) or Drain Line (gallons per minute) Capacity | Sump Type/Nominal Operating Volume (gallons) | Sump or Drain Line Dimensions[a] (inches) & Materials of Construction | Engineering Description (Drawing Nos., Specifications Nos., etc.) |
|---|---|---|---|---|
| RLD-SUMP-00028 | 59 | Dry Sump | 24" Dia. By 30" deep Stainless Steel (6% Mo) | **24590-LAW** -M6-RLD-00002005, Rev 0 -P1-P01T-00001, Rev 4 |

**Table III.10.E.L - LAW Vitrification Plant Tank Systems Secondary Containment Systems, Including Sumps, Bulges, Autosamplers, and Floor Drains**

| Sump or Drain Line I.D.# & Room Location | Maximum Sump (gallons) or Drain Line (gallons per minute) Capacity | Sump Type/Nominal Operating Volume (gallons) | Sump or Drain Line Dimensions[a] (inches) & Materials of Construction | Engineering Description (Drawing Nos., Specifications Nos., etc.) |
|---|---|---|---|---|
| L-B001B (C3/C5 Drains/Sump Collection Vessel Cell, El. –21') | | | | |
| RLD-SUMP-00029 L-0123 (Process Cell, El. +3') | 37 | Dry Sump | 30" Dia. By 12" deep Stainless Steel (6% Mo) | **24590-LAW** -M6-RLD-00003002, Rev 2 -P1-P01T-00002, Rev 7 |
| RLD-SUMP-00030 L-0123 (Process Cell, El. +3') | 37 | Dry Sump | 30" Dia. By 12" deep Stainless Steel (6% Mo) | **24590-LAW** -M6-RLD-00003002, Rev 2 -P1-P01T-00002, Rev 7 |
| RLD-SUMP-00031 L-0124 Process Cell Sump, El. +3') | 37 | Dry Sump | 30" Dia. By 12" deep Stainless Steel (6% Mo) | **24590-LAW** -M6-RLD-00003002, Rev 2 -P1-P01T-00002, Rev 7 |
| RLD-SUMP-00032 L-0124 (Process Cell, El. +3') | 37 | Dry Sump | 30" Dia. By 12" deep Stainless Steel (6% Mo) | **24590-LAW** -M6-RLD-00003002, Rev 2 -P1-P01T-00002, Rev 7 |
| RLD-SUMP-00035 L-0126 (Effluent Cell, El. +3') | 37 | Dry Sump | 30" Dia. By 12" deep Stainless Steel (6% Mo) | **24590-LAW** -M6-RLD-00003003, Rev 2 -P1-P01T-00002, Rev 7 |
| RLD-SUMP-00036 L-0126 (Effluent Cell, El. +3') | 37 | Dry Sump | 30" Dia. By 12" deep Stainless Steel (6% Mo) | **24590-LAW** -M6-RLD-00003003, Rev 2 -P1-P01T-00002, Rev 7 |

**Table III.10.E.L - LAW Vitrification Plant Tank Systems Secondary Containment Systems, Including Sumps, Bulges, Autosamplers, and Floor Drains**

| Sump or Drain Line I.D.# & Room Location | Maximum Sump (gallons) or Drain Line (gallons per minute) Capacity | Sump Type/Nominal Operating Volume (gallons) | Sump or Drain Line Dimensions[a] (inches) & Materials of Construction | Engineering Description (Drawing Nos., Specifications Nos., etc.) |
|---|---|---|---|---|
| Drain Line ID# = RLD-FD-00001<br>L-B001B (RLD-BULGE-00001 Drain, El. -21') | N/A | N/A | 2" Dia.<br>316L | **24590-LAW**<br>-M6-RLD-00002003, Rev 0 |
| Drain Line ID# = RLD-FD-00035<br>L-0126 (RLD-BULGE-0000-4 Drain El. +3') | N/A | N/A | 2" Dia.<br>6% Mo | **24590-LAW**<br>-M6-RLD-00001005, Rev 0 |
| Drain Line ID# = LOP-FD-00001<br>L-0123 (LOP-BULGE-00001 drain El. +3) | N/A | N/A | 2" Dia.<br>6% Mo | **24590-LAW**<br>-M6-LOP-0001003, Rev 0 |
| Drain Line ID# = LCP-FD-00001<br>L-0123 (LCP-BULGE-00001 Drain, El. +3') | N/A | N/A | 2" Dia.<br>316L | **24590-LAW**<br>-M6-LCP-00001001, Rev 0 |
| Drain Line ID# = LCP-FD-00002<br>L-0123 (LCP-BULGE-00002 Drain, El. +3') | N/A | N/A | 2" Dia.<br>316L | **24590-LAW**<br>-M6-LCP-00001004, Rev 0<br>-M6-LCP-00001005, Rev 0 |
| Drain Line ID# = RLD-WS-20037-S11B-01<br>L-0123 (Melter 1 Encasement Assembly Drain, El. +3') | N/A | N/A | 1" Dia.<br>316L | **24590-LAW**<br>-M6-LMP-00012001, Rev 0 |

**Table III.10.E.L - LAW Vitrification Plant Tank Systems Secondary Containment Systems, Including Sumps, Bulges, Autosamplers, and Floor Drains**

| Sump or Drain Line I.D.# & Room Location | Maximum Sump (gallons) or Drain Line (gallons per minute) Capacity | Sump Type/Nominal Operating Volume (gallons) | Sump or Drain Line Dimensions[a] (inches) & Materials of Construction | Engineering Description (Drawing Nos., Specifications Nos., etc.) |
|---|---|---|---|---|
| Drain Line ID# = LFP-FD-00001<br>L-0123 (LFP-BULGE-00001 Drain, El. +3) | N/A | N/A | 2" Dia.<br>316L | **24590-LAW**<br>-M6-LFP-00001005, Rev 0 |
| Drain Line ID# = LOP-FD-00002<br>L-0124 (LOP-BULGE-00002 Drain, El. +3) | N/A | N/A | 2" Dia.<br>6% Mo | **24590-LAW**<br>-M6-LOP-00002003, Rev 0 |
| Drain Line ID# = LCP-FD-00003<br>L-0124 (LCP-BULGE-00003 Drain, El. +3) | N/A | N/A | 2" Dia.<br>316L | **24590-LAW**<br>-M6-LCP-00002001, Rev 0<br>-M6-LCP-00002002, Rev 0 |
| Drain Line ID# = LFP-FD-00002<br>L-0124 (LFP-BULGE-00002 Drain, El. +3) | N/A | N/A | 2" Dia.<br>316L | **24590-LAW**<br>-M6-LFP-00003005, Rev 0 |
| Drain Line ID# = RLD-WS-20033-S11B-01<br>L-0124 (Melter 2 Encasement Assembly Drain, El. +3') | N/A | N/A | 1" Dia.<br>316L | **24590-LAW**<br>-M6-LMP-00042001, Rev 0 |
| LVP-FD-00001<br>L-0218 (Berm floor drain for LVP-TK-00001, El. 28')[b] | N/A | N/A | 4" Dia.<br>316L | **24590-LAW**<br>-M6-LVP-00002003, Rev 0 |

**Table III.10.E.L - LAW Vitrification Plant Tank Systems Secondary Containment Systems, Including Sumps, Bulges, Autosamplers, and Floor Drains**

| Sump or Drain Line I.D.# & Room Location | Maximum Sump (gallons) or Drain Line (gallons per minute) Capacity | Sump Type/Nominal Operating Volume (gallons) | Sump or Drain Line Dimensions[a] (inches) & Materials of Construction | Engineering Description (Drawing Nos., Specifications Nos., etc.) |
|---|---|---|---|---|
| RLD-FD-00025 L-0304F (Curb floor drain for Caustic Scrubber, El. 48')[b] | N/A | N/A | 4" Dia. 316L | **24590-LAW** -M6-RLD-00003001, Rev 0 |
| ASX Sampler 00012 Lower Containment Trough/Dam (L-0301, El. 48') | N/A | N/A | 3" Dia. Stainless Steel (316L) | **24590-LAW** -M6-RLD-00003001, Rev 0 |
| ASX Sampler 00013 Lower Containment Trough/Dam (L-0301, El. 48') | N/A | N/A | 3" Dia. Stainless Steel (316L) | **24590-LAW** -M6-RLD-00003001, Rev 0 |

[a] Dimensions listed are based on permitted design. Actual dimensions may vary within plus or minus (TBD).
[b] This sump is routinely accessible for inspections and maintenance.

**Table III.10.E.M - HLW Vitrification Plant Tank Systems Primary[a] Containment Sump Systems**

| Sump I.D.# & Room Location | Maximum Sump Capacity (gallons) | Sump Dimensions[b] (feet) & Materials of Construction | Engineering Description (Drawing Nos., Specifications Nos., etc.) |
|---|---|---|---|
| RESERVED | RESERVED | RESERVED | RESERVED |

[a] Primary sumps are defined in Permit Section III.10.C, and must comply with dangerous waste tank system requirements for tanks as described in WAC-173-303-640.
[b] Dimensions listed are based on permitted design. Actual dimensions may vary within plus or minus (TBD).

**Table III.10.E.N - HLW Vitrification Plant Tank Systems Secondary Containment Systems, Including Sumps, Autosamplers, and Floor Drains**

| Sump or Drain Line I.D.# & Room Location | Maximum Sump (gallons) Capacity | Sump Type | Sump or Drain Line Dimensions[a] (inches) & Materials of Construction | Engineering Description (Drawing Nos., Specifications Nos., etc.) |
|---|---|---|---|---|
| HCP-SUMP-00001<br>H-B014 (Wet Process Cell, El. –21’) | 75 | Dry Sump | 30” Dia. x 18” Deep<br>Stainless Steel | **24590-HLW**<br>-M6-RLD-00015001, Rev 0<br>-P1-P01T-00001, Rev 9 |
| RLD-SUMP-00001<br>H-B014 (Wet Process Cell, El. –21’) | 75 | Dry Sump | 30” Dia. X 18” Deep<br>Stainless Steel | **24590-HLW**<br>-M6-RLD-00015001, Rev 0<br>-P1-P01T-00001, Rev 9 |
| HOP-SUMP-00003<br>H-B021 (SBS Drain Collection Cell 1, El. –21’) | 75 | Dry Sump | 30” Dia. X 18” Deep<br>Stainless Steel | **24590-HLW**<br>-M6-RLD-00015001, Rev 0<br>-P1-P01T-00001, Rev 9 |
| HOP-SUMP-00008<br>H-B005 (SBS Drain Collection Cell 2, El. -21’) | 75 | Dry Sump | 30” Dia. X 18” Deep<br>Stainless Steel | **24590-HLW**<br>-M6-RLD-20004001, Rev 0<br>-P1-P01T-00001, Rev 9 |
| HDH-SUMP-00001<br>H-B039B (Canister Rinse Tunnel, El. –16.5’) | 75 | Dry Sump | 30” Dia. X 18” Deep<br>Stainless Steel | **24590-HLW**<br>-M6-RLD-00016001, Rev 0<br>-P1-P01T-00001, Rev 9 |
| HDH-SUMP-00002<br>H-B039A (Canister Rinse Bogie Maintenance Room, El. –16’) | 75 | Dry Sump | 30” Dia. X 18” Deep<br>Stainless Steel | **24590-HLW**<br>-M6-RLD-00016001, Rev 0<br>-P1-P01T-00001, Rev 9 |
| HDH-SUMP-00003<br>H-B035 (Canister Decon Cave, El. –16’) | 75 | Dry Sump | 30” Dia. X 18” Deep<br>Stainless Steel | **24590-HLW**<br>-M6-RLD-00004002, Rev 0<br>-P1-P01T-00001, Rev 9 |
| HFP-SUMP-00002<br>H-0117 (Melter Cave 1, El. 5’) | 50 | Dry Sump | 20.5” X 20.5” X 16”<br>Stainless Steel | **24590-HLW**<br>-M6-RLD-00008002, Rev 0<br>-P1-P01T-00002, Rev 7 |

**Table III.10.E.N - HLW Vitrification Plant Tank Systems Secondary Containment Systems, Including Sumps, Autosamplers, and Floor Drains**

| Sump or Drain Line I.D.# & Room Location | Maximum Sump (gallons) Capacity | Sump Type | Sump or Drain Line Dimensions[a] (inches) & Materials of Construction | Engineering Description (Drawing Nos., Specifications Nos., etc.) |
|---|---|---|---|---|
| HFP-SUMP-00005<br>H-0106 (Melter Cave 2 El. 5') | 50 | Dry Sump | 20.5" X 20.5" X 16"<br>Stainless Steel | **24590-HLW**<br>-M6-RLD- 20005001, Rev 0<br>-P1-P01T-00002, Rev 7 |
| HSH-SUMP-00003<br>H-0117 (Melter Cave 1, El. 3') | 50 | Dry Sump | 20.5" X 20.5" X 16"<br>Stainless Steel | **24590-HLW**<br>-M6-RLD-00008002, Rev 0<br>-P1-P01T-00002, Rev 7 |
| HSH-SUMP-00007<br>H-0106 (Melter Cave 2, El. 3') | 50 | Dry Sump | 20.5" X 20.5" X 16"<br>Stainless Steel | **24590-HLW**<br>-M6-RLD-20005001, Rev 0<br>-P1-P01T-00002, Rev 7 |
| HSH-SUMP-00008<br>H-310A (Melter 1 Equip. Decon. Pit Area, El. 0') | 50 | Dry Sump | 30" X 24" X 16"<br>Stainless Steel | **24590-HLW**<br>-M6-RLD-00003001, Rev 0<br>-P1-P01T-00002, Rev 7 |
| HSH-SUMP-00009<br>H-0304A (Melter 2 Equip. Decon. Pit Area, El. 0') | 50 | Dry Sump | 30" X 24" X 16"<br>Stainless Steel | **24590-HLW**<br>-M6-RLD-20003001, Rev 0<br>-P1-P01T-00002, Rev 7 |
| HPH-SUMP-00001<br>H-0136 (Canister Handling Cave, El. -3') | 75 | Dry Sump | 30" Dia. X 18" Deep<br>Stainless Steel | **24590-HLW**<br>-M6-RLD-00016001, Rev 0 |
| HPH-SUMP-00005<br>H-0136 (Canister Handling Cave, El. -3') | 75 | Dry Sump | 30" Dia. X 18" Deep<br>Stainless Steel | **24590-HLW**<br>-M6-RLD-00004001, Rev. 0 |
| HPH-SUMP-00003<br>H-B032 (Pour Tunnel 1, El. -21') | 75 | Dry Sump | 30" Dia. X 18" Deep<br>Stainless Steel | **24590-HLW**<br>-M6-RLD-00016001, Rev 0 |

**Table III.10.E.N - HLW Vitrification Plant Tank Systems Secondary Containment Systems, Including Sumps, Autosamplers, and Floor Drains**

| Sump or Drain Line I.D.# & Room Location | Maximum Sump (gallons) Capacity | Sump Type | Sump or Drain Line Dimensions[a] (inches) & Materials of Construction | Engineering Description (Drawing Nos., Specifications Nos., etc.) |
|---|---|---|---|---|
| RLD-ZF-03330-S11B-03 H-B021 (SBS Drain Collection Cell 1) | N/A | N/A | Line Size Pipe Dia 3” 316L Stainless Steel | **24590-HLW** -M6-RLD-00015001, Rev 0 |
| RLD-ZF-03447-S11B-03 H-B005 (SBS Drain Collection Cell 2) | N/A | N/A | Line Size Pipe Dia 3” 316L Stainless Steel | **24590-HLW** -M6-RLD-20004001, Rev 0 |
| RLD-FD-0186 H-0308 (Melter 1 - Active Services Cell, El. 37’) | N/A | N/A | Line Size Pipe Dia 6” Stainless Steel | **24590-HLW** -M6-RLD-00015001, Rev 0 |
| RLD-FD-0187 H-0302 (Melter 2 - Active Services Cell, El. 37’) | N/A | N/A | Line Size Pipe Dia 6” Stainless Steel | **24590-HLW** -M6-RLD-20004001, Rev 0 |
| ASX Sampler 00028 Lower Containment Trough/Dam (H-0305A, El. 37’) | N/A | N/A | 3” Dia. Stainless Steel | **24590-HLW** -M6-RLD-00002002, Rev 0 |
| ASX Sampler 00029 Lower Containment Trough/Dam (H-0315, El. 37’) | N/A | N/A | 3” Dia. Stainless Steel | **24590-HLW** -M6-RLD-00002002, Rev 0 |
| ASX Sampler 00042 Lower Containment Trough/Dam (H-0318, El. 37’) | N/A | N/A | 3” Dia. Stainless Steel | **24590-HLW** -M6-RLD-00002002, Rev 0 |
| RESERVED | RESERVED | RESERVED | RESERVED | RESERVED |

[a]Dimensions listed are based on permitted design. Actual dimensions may vary within plus or minus (TBD).

**Table III.10.E.O – Laboratory Tank Systems Primary[a] Containment Sump Systems**

| Sump I.D.# & Room Location | Maximum Sump Capacity (gallons) | Sump Dimensions[b] (feet) & Materials of Construction | Engineering Description (Drawing Nos., Specifications Nos., etc.) |
|---|---|---|---|
| RESERVED | RESERVED | RESERVED | RESERVED |

[a] Primary sumps are defined in Permit Section III.10.C, and must comply with dangerous waste tank system requirements for tanks as described in WAC-173-303-640.

[b]Dimensions listed are based on permitted design. Actual dimensions may vary within plus or minus (TBD).

1

**Table III.10.E.P – Laboratory Tank Systems Secondary Containment Systems, Including Sumps, Leak Detection Boxes, and Floor Drains**

| Sump I.D.# & Room Location | Maximum Sump Capacity (gallons) | Sump Type/Nominal Operating Volume (gallons) | Sump Dimensions[a] (inches) & Materials of Construction | Engineering Description (Drawing Nos., Specifications Nos., etc.) |
|---|---|---|---|---|
| RLD-SUMP-00041 A-B003 (C3 Effluent Vessel Cell, El. -18’7’) | 30 | Dry | 30” Dia. X ~13” Deep Stainless Steel | **24590-LAB**<br>-M6-RLD-00002001, Rev 1<br>-P1-60-00007, Rev 3 |
| RLD-SUMP-00042 A-B004 (C5 Effluent Vessel Cell, El. -19’2’) | 30 | Dry | 30” Dia. X ~13” Deep Stainless Steel | **24590-LAB**<br>-M6-RLD-00001001, Rev 1<br>-P1-60-00007, Rev 3 |
| RLD-SUMP-00045 A-B002 (C3 Pump Pit Sump, EL -6’-81/2”LP) | 1.56 | Dry | 2’-0” X 2’-6” X 1/2” | **24590-LAB**<br>-M6-RLD-00002001, Rev 1<br>-P1-60-00007, Rev 3 |
| RLD-SUMP-00043A A-B007 (C5 Pump Pit Sump, EL -6’-7”LP) | 1.40 | Dry | 1’-6” X 3’-0” X 1/2” Stainless Steel | **24590-LAB**<br>-M6-RLD-00001001, Rev 1<br>-P1-60-00007, Rev 3 |

**Table III.10.E.P – Laboratory Tank Systems Secondary Containment Systems, Including Sumps, Leak Detection Boxes, and Floor Drains**

| Sump I.D.# & Room Location | Maximum Sump Capacity (gallons) | Sump Type/Nominal Operating Volume (gallons) | Sump Dimensions[a] (inches) & Materials of Construction | Engineering Description (Drawing Nos., Specifications Nos., etc.) |
|---|---|---|---|---|
| RLD-SUMP-00043B A-B005 (C5 Pump Pit Sump, EL -6'-7" LP) | 1.40 | Dry | 1'-6" X 3'-0" X 1/2" Stainless Steel | **24590-LAB** -M6-RLD-00001001, Rev 1 -P1-60-00007, Rev 3 |
| RLD-SUMP-00044 A-B006 (C5 Piping Pit Sump, EL -6'-7" LP) | 1.56 | Dry | 2'-0" X 2'-6" X 1/2" Stainless Steel | **24590-LAB** -M6-RLD- 00001001, Rev 1 -P1-60-00007, Rev 3 |
| RLD-WU-02207-S11E-04 A-B003, (C3 Effluent Vessel Cell) | N/A | N/A | 4" Dia 316L | **24590-LAB** -M6-RLD-00002001, Rev 1 |
| RLD-ZN-02203-S11E-04 A-B004, (C5 Effluent Vessel Cell) | N/A | N/A | 4" Dia 316L | **24590-LAB** -M6-RLD- 00001001, Rev 1 |
| RLD-ZN-03393-S11E-04 A-B004, (C5 Effluent Vessel Cell) | N/A | N/A | 4" Dia 316L | **24590-LAB** -M6-RLD- 00001001, Rev 1 |
| RLD-ZN-03394-S11E-04 A-B004, (C5 Effluent Vessel Cell) | N/A | N/A | 4" Dia 316L | **24590-LAB** -M6-RLD- 00001001, Rev 1 |
| RLD-LDB-00002 A-B004 (C5 Effluent Vessel Cell, El. -10') | 6 | N/A | 8" Dia. x 24" Length/ Stainless Steel | **24590-LAB** -M6-RLD-00008001, Rev 0 |
| RLD-LDB-00004 A-B004 (C5 Effluent Vessel Cell, El. -10') | 6 | N/A | 8" Dia. x 24" Length/ Stainless Steel | **24590-LAB** -M6-RLD-00008001, Rev 0 |

**Table III.10.E.P – Laboratory Tank Systems Secondary Containment Systems, Including Sumps, Leak Detection Boxes, and Floor Drains**

| Sump I.D.# & Room Location | Maximum Sump Capacity (gallons) | Sump Type/Nominal Operating Volume (gallons) | Sump Dimensions[a] (inches) & Materials of Construction | Engineering Description (Drawing Nos., Specifications Nos., etc.) |
|---|---|---|---|---|
| RLD-LDB-00005 A-B003 (C3 Effluent Vessel Cell, El. -10') | 6 | N/A | 8" Dia. x 24" Length/ Stainless Steel | **24590-LAB** -M6-RLD-00007001, Rev 0 |
| RLD-LDB-00006 A-B003 (C3 Effluent Vessel Cell, El. -10') | 6 | N/A | 8" Dia. x 24" Length/ Stainless Steel | **24590-LAB** -M6-RLD- 00007001, Rev 0 |
| RLD-LDB-00007 A-B003 (C3 Effluent Vessel Cell, El. -10') | 6 | N/A | 8" Dia. x 24" Length/ Stainless Steel | **24590-LAB** -M6-RLD- 00007001, Rev 0 |
| RLD-LDB-00008 A-B003 (C3 Effluent Vessel Cell, El. -10') | 6 | N/A | 8" Dia. x 24" Length/ Stainless Steel | **24590-LAB** -M6-RLD- 00007001, Rev 0 |
| RLD-LDB-00009 A-B004 (C5 Effluent Vessel Cell, El. -10') | 6 | N/A | 8" Dia. x 24" Length/ Stainless Steel | **24590-LAB** -M6-RLD- 00008001, Rev 0 |
| RLD-LDB-00011 A-B003 (C3 Effluent Vessel Cell, El. -10') | 6 | N/A | 8" Dia. x 24" Length/ Stainless Steel | **24590-LAB** -M6-RLD-00007001, Rev 0 |
| RESERVED | RESERVED | RESERVED | RESERVED | RESERVED |

[a]Dimensions listed are based on permitted design. Actual dimensions may vary within plus or minus (TBD).

**Table III.10.E.R - EMF Plant Tank Systems Description**

| Dangerous and/or Mixed Waste Tank Systems Name | Unit Designation | Engineering Description (Drawing Nos, Specification Nos, etc.) | Narrative Description, Tables & Figures | Maximum Capacity (gallons) |
|---|---|---|---|---|
| DEP-VSL-00001<br>ED-B001<br>Low-point drain vessel | DEP | Reserved | Section 4G.2.1; Table 4G-1 | 18,000 |
| DEP-VSL-00002<br>E-0105<br>Evaporator feed vessel | DEP | Reserved | Section 4G.2.2; Table 4G-1 | 42,300 |
| DEP-VSL-00003A<br>E-0105<br>Evaporator feed vessel | DEP | Reserved | Section 4G.2.3; Table 4G-1 | 14,805 |
| DEP-VSL-00003B<br>E-0105<br>Evaporator feed vessel | DEP | Reserved | Section 4G.2.3; Table 4G-1 | 14,805 |
| DEP-VSL-00003C<br>E-0105<br>Evaporator feed vessel | DEP | Reserved | Section 4G.2.3; Table 4G-1 | 14,805 |
| DEP-VSL-00004A<br>E-0106<br>Overhead sampling vessel | DEP | Reserved | Section 4G.2.4; Table 4G-1 | 40,800 |
| DEP-VSL-00004B<br>E-0106<br>Overhead sampling vessel | DEP | Reserved | Section 4G.2.4; Table 4G-1 | 40,800 |
| DEP-VSL-00005A<br>E-0106<br>Process condensate lag storage vessel | DEP | Reserved | Section 4G.2.5; Table 4G-1 | 127,260 |

| Dangerous and/or Mixed Waste Tank Systems Name | Unit Designation | Engineering Description (Drawing Nos, Specification Nos, etc.) | Narrative Description, Tables & Figures | Maximum Capacity (gallons) |
|---|---|---|---|---|
| DEP-VSL-00005B<br>E-0106<br>Process condensate lag storage vessel | DEP | Reserved | Section 4G.2.5; Table 4G-1 | 127,260 |

**Table III.10.E.S - EMF Plant Tank Systems Secondary Containment Systems, including Sumps, Leak Detection Boxes, Drain Lines, and Floor Drains**

| Sump/Leak Detection Box, or Floor Drain/Line I.D.# and Room# | Maximum Sump/Leak Detection Box Capacity (gallons) | Sump/Leak Detection Box Level Detection Type | Sump, Leak Detection Box or Floor Drain/Line Dimensions (approximate) and Materials of Construction | Piping and Instrumentation Diagram Number |
|---|---|---|---|---|
| **Effluent Management Facility** | | | | |
| **Sumps** | | | | |
| DEP-SUMP-00001<br>ED-B001 | ~58 | Radio Frequency (RF) Capacitance | 24 in. Dia. x 30 in. Length<br>304L SS | **24590-BOF**<br>-M6-DEP-00001002 |
| DEP-SUMP-00002A<br>E-0103 | ~58 | RF Capacitance | 24 in. Dia. x 30 in. Length<br>304L SS | **24590-BOF**<br>-M6-DEP-00009001 |
| DEP-SUMP-00002B<br>E-0103 | ~58 | RF Capacitance | 24 in. Dia. x 30 in. Length<br>304L SS | **24590-BOF**<br>-M6-DEP-00009001 |
| DEP-SUMP-00003A<br>E-0102 | ~58 | RF Capacitance | 24 in. Dia. x 30 in. Length<br>304L SS | **24590-BOF**<br>-M6-DEP-00009004 |
| DEP-SUMP-00003B<br>E-0102 | ~58 | RF Capacitance | 24 in. Dia. x 30 in. Length<br>304L SS | **24590-BOF**<br>-M6-DEP-00009004 |
| DEP-SUMP-00004A | ~58 | RF Capacitance | 24 in. Dia. x 30 in. Length | **24590-BOF** |

| | | | | | |
|---|---|---|---|---|---|
| E-0105 | | | 304L SS | | -M6-DEP-00009002 |
| DEP-SUMP-00004B<br>E-0105 | ~58 | RF Capacitance | 24 in. Dia. x 30 in. Length<br>304L SS | | **24590-BOF**<br>-M6-DEP-00009002 |
| DEP-SUMP-00005A<br>E-0106 | ~58 | RF Capacitance | 24 in. Dia. x 30 in. Length<br>304L SS | | **24590-BOF**<br>-M6-DEP-00009005 |
| DEP-SUMP-00005B<br>E-0106 | ~58 | RF Capacitance | 24 in. Dia. x 30 in. Length<br>304L SS | | **24590-BOF**<br>-M6-DEP-00009005 |
| **Leak Detection Boxes** | | | | | |
| DEP-LDB-00001<br>ED-B001 | ~7 | Conductivity Switch | 8 in. Dia. x 41 in. Length<br>316L SS | | **24590-BOF**<br>-M6-DEP-00011001 |
| DEP-LDB-00002<br>ED-B001 | ~7 | Conductivity Switch | 8 in. Dia. x 41 in. Length<br>316L SS | | **24590-BOF**<br>-M6-DEP-00011001 |
| DEP-LDB-00003<br>ED-B001 | ~7 | Conductivity Switch | 8 in. Dia. x 41 in. Length<br>316L SS | | **24590-BOF**<br>-M6-DEP-00011001 |
| DEP-LDB-00004<br>ED-B001 | ~7 | Conductivity Switch | 8 in. Dia. x 41 in. Length<br>316L SS | | **24590-BOF**<br>-M6-DEP-00011001 |
| DEP-LDB-00005<br>ED-B001 | ~7 | Conductivity Switch | 8 in. Dia. x 41 in. Length<br>316L SS | | **24590-BOF**<br>-M6-DEP-00011001 |
| DEP-LDB-00006<br>ED-B001 | ~7 | Conductivity Switch | 8 in. Dia. x 41 in. Length<br>316L SS | | **24590-BOF**<br>-M6-DEP-00011001 |
| **Drain Lines** | | | | | |
| BOF-DEP-ZS-20282-W11A-011/02-01<br>ED-CH01 | NA | NA | 4 in. Dia. 316L SS | Containment pipe | **24590-BOF**<br>-M6-DEP-00001001 |
| | | | 1 ½ in. Dia. AL6XN | Process pipe | |
| BOF-DEP-ZS-20236-W31A-02-01 | NA | NA | 4 in. Dia. Carbon Steel | Containment pipe | **24590-BOF**<br>-M6-DEP-00001001 |

| | | | | | |
|---|---|---|---|---|---|
| ED-CH01 | | | 2 in. Dia. 316L SS | Process pipe | |
| BOF-DEP-ZS-20245 -W11A-04-01ED-CH01 | NA | NA | 6 in. Dia. 3166 SS | Containment pipe | **24590-BOF** -M6-DEP-00001001 |
| | | | 4 in. Dia. AL6XN | Process pipe | |
| BOF-DEP-ZS-20231-W31A-03-01 ED-CH01 | NA | NA | 6 in. Dia. Carbon Steel | Containment pipe | **24590-BOF** -M6-DEP-00001001 |
| | | | 3 in. Dia. 316L SS | Process pipe | |
| BOF-DEP-ZS-20242-W31A-10-01 ED-CH01 | NA | NA | 14 in. Dia. Carbon Steel | Containment pipe | **24590-BOF** -M6-DEP-00001001 |
| | | | 10 in. Dia. 316L SS | Process pipe | |
| BOF-DEP-ZS-20249-W31A-03-01 ED-CH01 | NA | NA | 6 in. Dia. Carbon Steel | Containment pipe | **24590-BOF** -M6-DEP-00001001 |
| | | | 3 in. Dia. 316L SS | Process pipe | |
| BOF-DEP-ZS-20225-W31A-02-01 ED-CH01 | NA | NA | 4 in. Dia. Carbon steel | Containment pipe | **24590-BOF** -M6-DEP-00001002 |
| | | | 2 in. Dia. 316L SS | Process pipe | |
| BOF-DEP-ZS-20219-W31A-02-01 | NA | NA | 4 in. Dia. Carbon steel | Containment pipe | **24590-BOF** -M6-DEP-00001002 |

| | | | | | |
|---|---|---|---|---|---|
| ED-CH01 | | | 2 in. Dia. 316L SS | Process pipe | |
| BOF-DEP-ZS-20222-W31A-02-01<br>ED-CH01 | NA | NA | 4 in. Dia. Carbon Steel | Containment pipe | **24590-BOF** -M6-DEP-00001002 |
| | | | 2 in. Dia 316L SS. | Process pipe | |
| BOF-DEP-ZS-20252-W11A-03-01<br>ED-CH01 | NA | NA | 6 in. Dia. 316L SS | Containment pipe | **24590-BOF** -M6-DEP-00010001 |
| | | | 3 in. Dia. AL6XN | Process pipe | |
| BOF-DEP-ZS-20265-W31A-03-01<br>ED-CH01 | NA | NA | 6 in. Dia. Carbon Steel | Containment Pipe | **24590-BOF** -M6-DEP-00002006 |
| | | | 3 in. Dia. 316L SS | Process pipe | |
| BOF-DEP-ZY-00181-W31A-03-01<br>ED-CH01 | NA | NA | 6 in. Dia. Carbon Steel | Containment Pipe | **24590-BOF** -M6-DEP-00001001 |
| | | | 3 in. Dia. 316L SS | Process pipe | |
| BOF-DEP-WU-00008-W31A-03-01<br>ED-CH01 | NA | NA | 6 in. Dia. Carbon steel | Containment pipe | **24590-BOF** -M6-DEP-00001001 |
| | | | 3 in. Dia. 316L SS | Process pipe | |
| BOF-DVP-GV-00026-W31A-03-01<br>ED-CH01 | NA | NA | 6 in. Dia. Carbon steel | Containment Pipe | **24590-BOF** -M6-DEP-00001001 |
| | | | 3 in. Dia. 316L SS | Process pipe | |

**Table III.10.E.T - EMF Plant Secondary Containment Rooms/Areas**

| Room/Area | Approximate Room/Area Dimensions (L×W, in feet) | Miscellaneous Treatment Units or Tanks in Room/Area (Largest Plant Item) | Volume of Largest Plant Item in Room/Area (US Gallons) | Minimum Secondary Containment Height (feet) |
|---|---|---|---|---|
| E-0102 east evaporator process area | 62 ft x 94 ft 6 in. | Process condensate lag storage vessel | 127,260 | 4 ft 6 in. |
| E-0103 west evaporator process area | 62 ft x 56 ft 6 in. | Evaporator feed vessel | 42,300 | 3 ft 5 in. |
| ED-B001 low-point drain vessel area | 28 ft x 33 ft | Low-point drain vessel | 18,000 | 4 ft 2 in. |
| E-0105-evaporator feed vessel area | 45 ft 6 in. x 39 ft | Evaporator feed vessel | 42,300 | 5 ft 2 in. |
| E-0106 process condensate lag storage vessel area | 45 ft6 in. x 84 ft 4 in. | Process condensate lag storage vessel | 127,260 | 6 ft 10 in. |

## III.10.F CONTAINMENT BUILDING UNITS

### III.10.F.1 Containment Building Units and Storage Limits

**III.10.F.1.a** Approved Waste and Storage Limits

**III.10.F.1.a.i** The Permittees may store and treat, in containment building units listed in Permit Table III.10.F.A., as modified by Permit Condition III.10.F.7.d.iv., all dangerous and mixed waste listed in the Part A Forms, Operating Unit Group 10, Chapter 1 of this Permit**,** except for those wastes outside the waste acceptance criteria specified in the WAP, Operating Unit Group 10, Chapter 3, as approved pursuant to Permit Condition III.10.C.3. Total dangerous and mixed waste storage at the containment building units will not exceed the sum of the capacities in column 7 of Permit Table III.10.F.A., as modified pursuant to Permit Condition III.10.F.7.d.iv.

**III.10.F.1.a.ii** The Permittees may place and store dangerous and mixed waste only in the containment building units listed in Permit Table III.10.F.A., as modified pursuant to Permit Condition III.10.F.7.d.iv., in accordance with Permit Condition III.10.F., and in accordance with Operating Unit Group 10, Chapters 1.0 and 4.0, and Operating Unit Group 10, Appendices 8.1, 8.2, 8.4 through 8.10, 8.13, 8.15, 9.1, 9.2, 9.4 through 9.10, 9.13, 9.18, 10.1, 10.2, 10.4 through 10.10, 10.13, and 10.18 of this Permit, as approved pursuant to Permit Conditions III.10.F.7.c. and III.10.F.7.d. The Permittees will limit the volume of dangerous and mixed waste to quantities specified for the individual areas listed in column 7 of Permit Table III.10.F.A., as modified pursuant to Permit Condition III.10.F.7.d.iv.

**III.10.F.1.b** The Permittees will manage any ignitable, reactive, or incompatible waste in these units in accordance with WAC 173-303-395(1). Any containment building units specified in Permit Table III.10.F.A. in which ignitable, reactive, or incompatible waste are managed will meet the requirements specified in WAC 173-303-640(9) and (10), in accordance with WAC 173-303-680(2).

**III.10.F.1.c** The Permittees must maintain documentation in the operating record of the description and quantity of dangerous waste in each containment building unit listed in Permit Table III.10.F.A., as modified pursuant to Permit Condition III.10.F.7.d.iv., in accordance with WAC 173-303-380.

**III.10.F.1.d** The Permittees will ensure all certifications required by specialists (e.g., qualified, registered, professional engineer, etc.) use the following statement or equivalent pursuant to Permit Condition III.10.C.10.:

"I, (Insert Name) have (choose one or more of the following: overseen, supervised, reviewed, and/or certified) a portion of the design or installation of a new containment building unit or component located at (address), and owned/operated by (name(s)). My duties were: (e.g., design engineer, etc.), for the following containment building unit components (e.g., the venting piping, etc.), as required by the Resource Conservation and Recovery Act (RCRA) regulation(s), namely, 40 CFR 264.1101(c)(2) in accordance with WAC 173-303-695).

"I certify under penalty of law that I have personally examined and am familiar with the information submitted in this document and all attachments and that, based on my inquiry of those individuals immediately responsible for obtaining the information, I believe that the information is true, accurate, and complete. I am aware that there are significant

penalties for submitting false information, including the possibility of fine and imprisonment."

### III.10.F.2 Containment Building Unit Design and Construction

**III.10.F.2.a** The Permittees will design and construct the containment building units identified in Permit Table III.10.F.A., as modified pursuant to Permit Condition III.10.F.7.d.iv., as specified in Operating Unit Group 10, Appendices 8.1, 8.2, 8.4 through 8.10, 8.13, 8.15, 9.1, 9.2, 9.4 through 9.10, 9.13, 9.18, 10.1, 10.2, 10.4 through 10.10, 10.13, and 10.18 of this Permit, as approved in accordance with Permit Condition III.10.F.7.a. and WAC 173-303-695.

**III.10.F.2.b** The Permittees will design and construct all applicable containment building units' secondary containment systems for each unit listed in Permit Table III.10.F.A., as specified in Operating Unit Group 10, Appendices 8.4 through 8.9, 8.15, 9.4 through 9.9, 9.18, 10.4 through 10.9, and 10.18 of this Permit, as approved in accordance with Permit Condition III.10.F.7.a. and WAC 173-303-695.

**III.10.F.2.c** Modifications to approved design plans and specifications, in Operating Unit Group 10, Appendices 8.1, 8.2, 8.4 through 8.10, 8.13, 8.15, 9.1, 9.2, 9.4 through 9.10, 9.13, 9.18, 10.1, 10.2, 10.4 through 10.10, 10.13, and 10.18 of this permit, for the containment building units will be allowed only in accordance with Permit Conditions III.10.C.2.e. and III.10.C.2.f., or III.10.C.2.g., III.10.C.9.d, and III.10.C.9.e.

### III.10.F.3 Containment Building Unit Management Practices

**III.10.F.3.a** The Permittees will manage all dangerous and mixed waste in containment building units in accordance with procedures described in Operating Unit Group 10, Appendices 8.15, 9.18, 10.18 and Chapter 4 of this Permit, as approved pursuant to Permit Condition III.10.F.7.d.iv.

**III.10.F.3.b** The Permittees will follow the description of operating procedures described in Operating Unit Group 10, Appendices 8.15, 9.18, 10.18 and Chapter 4, of this permit, as approved pursuant to Permit Condition III.10.F.7.d.iv. and Permit Condition III.10.F.3., and as specified below:

**III.10.F.3.b.i** Maintain the primary barrier to be free of significant cracks, gaps, corrosion, or other deterioration that could cause dangerous and mixed waste to be released from the primary barrier;

**III.10.F.3.b.ii** Maintain the level of stored/treated dangerous and mixed waste within the containment building unit walls so that the height of the wall is not exceeded;

**III.10.F.3.b.iii** Take measures to prevent the tracking of dangerous and mixed waste out of the unit by personnel or by equipment used in handling the waste. An area must be designated to decontaminate equipment and any rinsate must be collected and properly managed;

**III.10.F.3.b.iv** Maintain the containment building unit at all times to prevent the spread of airborne dangerous and/or mixed waste contamination into less contaminated or uncontaminated areas. All air pollution control devices for exhaust from containment building unit must be properly maintained and operational when storing or treating dangerous and mixed waste in the containment building units;

**III.10.F.3.b.v** Collect and remove liquids and waste to minimize hydraulic head on the containment system at the earliest practicable time.

**III.10.F.3.c** The Permittees will inspect the containment building units per requirements in the Operating Unit Group 10, Appenix 6A of this permit, as approved pursuant to Permit Condition III.10.C.5., 40 CFR 264.1101(c)(4),in accordance with WAC 173-303-695 and WAC 173-303-320 and record in the Facility's operating record, at least once every seven (7) days, data gathered from monitoring equipment and leak detection equipment as well as the containment building unit and area immediately surrounding the containment building unit to detect signs of releases of dangerous and mixed waste.

**III.10.F.3.d** Throughout the active life of the containment building unit, if the Permittees detects a condition that could lead to or has caused a release of dangerous and/or mixed waste, the Permittees must repair the condition promptly, in accordance with the following procedures:

**III.10.F.3.d.i** Upon detection of a condition that has led to the release of dangerous and/or mixed waste (e.g., upon detection of leakage from the primary barrier) the Permittees must:

A. Enter a record of the discovery in the facility operating record;

B. Immediately remove the portion of the containment building unit affected by the condition from service;

C. Determine what steps must be taken to repair the containment building unit, remove any leakage from the secondary collection system, and establish a schedule for accomplishing the cleanup and repairs; and

D. Within seven (7) days after the discovery of the condition, notify Ecology of the condition, and within fourteen (14) working days, provide a written notice to Ecology with a description of the steps taken to repair the containment building unit, and the schedule for accomplishing the work.

**III.10.F.3.d.ii** Ecology will review the information submitted, make a determination regarding whether the containment building unit must be removed from service completely or partially until repairs and cleanup are complete, and notify the Permittees of the determination and underlying rationale in writing.

**III.10.F.3.d.iii** Upon completing all repairs and cleanup the Permittees must notify Ecology in writing and provide verification, signed by a qualified, registered, professional engineer, that repairs have been completed according to the written notice submitted in accordance with Permit Condition III.10.F.3.d.i.D.

**III.10.F.4 Inspections [WAC 173-303-640(6)]**

**III.10.F.4.a** The Permittees will inspect the containment building units in accordance with the Inspection Plan in Operating Unit Group 10, Chapter 6 of this Permit, as modified pursuant to Permit Condition III.10.C.5.c.

**III.10.F.4.b** The inspection data for the containment building units will be recorded, and the records will be placed in the WTP Unit operating record, in accordance with Permit Condition III.10.C.4.

**III.10.F.5 Recordkeeping (WAC 173-303-380)**

For the containment building units, the Permittees will record and maintain in the WTP Unit operating record, all monitoring, calibration, recording, maintenance, test data, and inspection data compiled under the conditions of this Permit, in accordance with Permit Conditions III.10.C.4. and III.10.C.5.

### III.10.F.6 Closure

The Permittees will close the containment building units in accordance with Operating Unit Group 10, Chapter 11 of this Permit, as approved pursuant to Permit Condition III.10.C.8.

### III.10.F.7 Compliance Schedule

**III.10.F.7.a** All information identified for submittal to Ecology in Permit Conditions III.10.F.7.b. through e. of this compliance schedule must be signed in accordance with requirements in WAC 173-303-810(12), as modified in accordance with Permit Condition III.10.F.1.d. [WAC 173-303-806(4)].

**III.10.F.7.b** Prior to initial receipt of dangerous and/or mixed waste, the Permittees will submit to Ecology a certification by a qualified, registered, professional engineer that the containment building units design meets the requirements of Permit Conditions III.10.F.1.and III.10.F.2. in accordance with Permit Condition III.10.F.7.a. The certification will also be stored in the WTP Unit operating record. For containment buildings units in Permit Table III.10.F.A., as modified pursuant to Permit Condition III.10.F.7.d.iv., identified as allowed to manage free liquids, the certification will include an additional demonstration that the containment building meets the requirements specified in 40 CFR 264.1101(b), in accordance with WAC 173-303-695.

**III.10.F.7.c** The Permittees submit to Ecology pursuant to Permit Condition III.10.C.9.f., prior to construction of the containment building unit containment system, and as appropriate, leak detection system for each containment building unit (per level, per WTP Unit building) as identified in Permit Condition III.10.F.1., Permit Tables III.10.F.A., engineering information as specified below, for incorporation, as appropriate, into Operating Unit Group 10, Appendices 8.1, 8.2, 8.3, 8.4 through 8.10, 8.13, 8.15, 9.1, 9.2, 9.4 through 9.10, 9.13, 9.18, 10.1, 10.2, 10.4 through 10.10, 10.13, and 10.18 of this Permit. At a minimum, engineering information specified below will show the following as required in accordance with WAC 173-303-695 (the information specified below will include dimensioned engineering drawings showing floors, walls, and ceilings/roof of the containment building units and other information on floor drains and sumps):

**III.10.F.7.c.i** Design drawings (General Arrangement Drawings in plan ) and specifications for the foundation, containment, including liner/coating installation details and leak detection methodology, as appropriate [40 CFR 264.1101(a)(1) and (b), in accordance with WAC 173-303-695].

**III.10.F.7.c.ii** The Permittees provide the design criteria (references to codes and standards, load definitions and load combinations, materials of construction, and analysis/design methodology) and typical design details for the support of the containment system. This information demonstrate the foundation will be capable of providing support to the secondary containment system, resistance to pressure gradients above and below the system, and capable of preventing failure due to settlement, compression, or uplift [40 CFR 264.1101(a)(2) in accordance with WAC 173-303-695, in accordance with WAC 173-303-695].

**III.10.F.7.c.iii** The Permittees provide documentation addressing how coatings will withstand the movement of personnel, waste, and equipment during the operating life of the containment building per 40 CFR 264.1101(a)(2), (a)(4), and (b) in accordance with WAC 173-303-695.

**III.10.F.7.c.iv** Containment/foundation and, as appropriate, for leak detection systems, materials selection documentation (including, but not limited to, concrete coatings and water stops, and liner materials as applicable [e.g. physical and chemical tolerances]) [40 CFR 264.1101(a)(4) and (b) in accordance with WAC 173-303-695].

**III.10.F.7.c.v** A detailed description of how the containment/foundation and, as appropriate, leak detection systems, will be installed.

**III.10.F.7.c.vi** Submit Permit Tables III.10.F.B and III.10.F.C, completed to provide for all secondary containment sumps and floor drains, the information as specified in each column heading, consistent with the information to be provided in i. through viii.

**III.10.F.7.c.vii** A detailed description of how fugitive emissions will be controlled such that any openings (e.g., doors, windows, vents, cracks, etc.) exhibit no visible emissions [40 CFR 264.1101(c)(1)(iv) in accordance with WAC 173-303-695].

**III.10.F.7.c.viii** Prior to installation, the Permittees will submit coating vendor information specific to containment buildings for incorporation into the Administrative Record [40 CFR 264.1101(a)(4) and (b) in accordance with WAC 173-303-695].

**III.10.F.7.c.ix** Prior to installation, leak detection system documentation (e.g. vendor information, etc.) consistent with information submitted under i. above, will be submitted for incorporation into the Administrative Record;

**III.10.F.7.c.x** Prior to installation, the Permittees will submit leak detection system instrumentation control logic narrative description (e.g., descriptions of fail-safe conditions, etc.);

**III.10.F.7.c.xi** Prior to installation, system descriptions related to leak detection systems will be submitted for incorporation into the Administrative Record;

**III.10.F.7.c.xii** For leak detection system instrumentation for containment buildings as identified in Permit Tables III.10.F.D., a detailed description of how the leak detection system instrumentation will be installed and tested [40 CFR 264.1101(b)(3) in accordance with WAC 173-303-695] will be submitted prior to installation.

Information pertaining to leak detection systems in Permit Conditions III.10.F.7.c.ix. through xii. Will be submitted pursuant to Permit Conditions III.10.E.9.d.vii., viii., x., and xiii.

**III.10.F.7.d** Prior to initial receipt of dangerous and mixed waste, in the WTP Unit, the Permittees will submit the following, as specified below, for incorporation into Operating Unit Group 10. The information specified below into Operating Unit Group 10, and incorporated pursuant to Permit Condition III.10.C.2.g. will be followed:

**III.10.F.7.d.i** Registered Professional Engineer certification documentation consistent with the information provided in III.10.F.7.b. and III.10.F.7.c. for incorporation in the Administrative Record. The certification must be maintained in the WTP Unit Operating Record [40 CFR 264.1101(c)(2)];

**III.10.F.7.d.ii** Updated Chapter 4, Sections 4D.1, 4E.1, 4F.1, 4H.1, 4I.1, and the figures for containment building units identified in Permit Table III.10.F.A. (as modified pursuant to Permit Condition III.10.F.7.d.iv., consistent with Operating Unit Group 10, Appendices 8.1, 8.2, 8.4 through 8.10, 8.13, 8.15, 9.1, 9.2, 9.4 through 9.10, 9.13, 9.18, 10.1, 10.2, 10.4 through 10.10, 10.13, and 10.18, as approved pursuant Permit Conditions III.10.F.7.a. through d.);

**III.10.F.7.d.iii** Description of operating procedures demonstrating compliance with 40 CFR 264.1101(c) and (d) in accordance with WAC 173-303-695;

**III.10.F.7.d.iv** Permit Table III.10.F.A., amended as follows:

A. Under column 1, update and complete list of dangerous and mixed waste containment building units including room location and number.

B. Under column 2, update unit dimensions.

C. Under column 3, replace the 'Reserved' with the Operating Unit Group 10, Appendices 8.0, 9.0, and 10.0, subsections specific to containment building units as listed in column 1.

D. Under column 4, update and complete list of narrative description, tables, and figures.

E. Under column 5, replace the 'Reserved' to indicate if container storage is used in each containment building units (Yes or No) consistent with Permit Table III.10.D.A. updated pursuant to Permit Condition III.10.D.10.d.

F. Under column 6, replace the 'Reserved' to indicate if tank storage is used in each containment building units (Yes or No) consistent with Permit Tables III. 10.E.A-D., updated pursuant to Permit Condition III.10.E.9.e.vi.

G. Under column 7, replace the 'Reserved' with the maximum operating volume for each containment building unit, to include the container storage capacity specified in Permit Table III.10.D.A., tank capacity specified in Permit Tables III. 10.E.A-D. and update the total capacity for the containment building units.

H. Under column 8, update the status of each containment building unit.

**III.10.F.7.d.v** Permit Table III.10.F.D. will be completed for Containment Building leak detection system instrumentation and parameters to provide the information as specified in each column heading. Leak detection system monitors and instruments for critical systems as specified in Operating Unit Group 10, Appendix 2.0 and as updated pursuant to Permit Condition III.10.C.9.b. will be addressed.

**III.10.F.7.e** All information provided under Permit Condition III.10.F.7.d. must be consistent with information provided pursuant to Permit Conditions III.10.F.7.a. through d., as approved by Ecology.

**Table III.10.F.A – Containment Building Unit Description**

| Mixed Waste Containment Building Units[a] & Systems | Dimensions (LxWxH) (in feet) | Unit Description | Narrative Description and Figures | Container Storage Areas[b] | Tank Systems[c] | Containment Building Capacity (cu ft) | Manage Free Liquids |
|---|---|---|---|---|---|---|---|
| **Pretreatment Plant** | | | | | | | |
| P-0123 Pretreatment Hotcell Containment Building | 350x51x52 | RESERVED | Section 4D.3.1; Table 4D-5; and Fig. 4A-59 (Sheets 1-2) of Operating Unit Group 10, Chapter 4 of this Permit. | RESERVED | RESERVED | RESERVED | No |
| **Pretreatment Maintenance Containment Building** | | | | | | | |
| PM0124 Hotcell Crane Maintenance Mezzanine | 27 x 51 x 33 | RESERVED | Section 4D.3.2; Table 4D-5; and Fig. 4A-59 (Sheets 1-2) of Operating Unit Group 10, Chapter 4 of this Permit. | RESERVED | RESERVED | RESERVED | No |
| P-0121A Spent Resin Dewatering | 28 × 18 × 28 | RESERVED | Section 4D.3.2; Table 4D-5; and Fig. 4A-59 (Sheets 1-2) of Operating Unit Group 10, Chapter 4 of this Permit. | RESERVED | RESERVED | RESERVED | No |
| P-0122A Waste Packaging Area | 26 × 51 × 28 | RESERVED | Section 4D.3.2; Table 4D-5; and Fig. 4A-59 (Sheets 1-2) of Operating Unit Group 10, Chapter 4 of this Permit. | RESERVED | RESERVED | RESERVED | No |
| P-0123A Remote Decontamination Maintenance Cell | 55 × 51 × 52 | RESERVED | Section 4D.3.2; Table 4D-5; and Fig. 4A-59 (Sheets 1-2) of Operating Unit Group 10, Chapter 4 of this Permit. | RESERVED | RESERVED | RESERVED | No |
| P-0124 C3 Workshop | (24 × 24 × 16) + (34 x 24 x 15) | RESERVED | Section 4D.3.2; Table 4D-5; and Fig. 4A-59 (Sheets 1-2) of Operating Unit Group 10, Chapter 4 of this Permit. | RESERVED | RESERVED | RESERVED | No |

**Table III.10.F.A – Containment Building Unit Description**

| Mixed Waste Containment Building Units[a] & Systems | Dimensions (LxWxH) (in feet) | Unit Description | Narrative Description and Figures | Container Storage Areas[b] | Tank Systems[c] | Containment Building Capacity (cu ft) | Manage Free Liquids |
|---|---|---|---|---|---|---|---|
| P-0124A C3 Workshop | (73 + 15 × 15) + (16 × 15 + 15) | RESERVED | Section 4D.3.2; Table 4D-5; and Fig. 4A-59 (Sheets 1-2) of Operating Unit Group 10, Chapter 4 of this Permit. | RESERVED | RESERVED | RESERVED | No |
| P-0125 Cask Lidding Airlock & Equipment Chase | 24 × 20 × 28 | RESERVED | Section 4D.3.2; Table 4D-5; and Fig. 4A-59 (Sheets 1-2) of Operating Unit Group 10, Chapter 4 of this Permit. | RESERVED | RESERVED | RESERVED | No |
| P-0125ACask Lidding Room | 28 × 18 × 25 | RESERVED | Section 4D.3.2; Table 4D-5; and Fig. 4A-59 (Sheets 1-2) of Operating Unit Group 10, Chapter 4 of this Permit. | RESERVED | RESERVED | RESERVED | No |
| P-0128A MSM Repair Area | 24 × 18 × 28 | RESERVED | Section 4D.3.2; Table 4D-5; and Fig. 4A-59 (Sheets 1-2) of Operating Unit Group 10, Chapter 4 of this Permit. | RESERVED | RESERVED | RESERVED | No |
| P-0128 MSM Testing Room | 24 × 17 × 27 | RESERVED | Section 4D.3.2; Table 4D-5; and Fig. 4A-59 (Sheets 1-2) of Operating Unit Group 10, Chapter 4 of this Permit. | RESERVED | RESERVED | RESERVED | No |
| P-0223 Spent Filter Drum Handling Area Containment Building | 54 x 18 x 26 | RESERVED | Section 4D.3.3; Table 4D-5; and Fig. 4A-59 (Sheets 1-2) of Operating Unit Group 10, Chapter 4 of this Permit. | RESERVED | RESERVED | RESERVED | No |
| P-0335 Filter Cave Containment Building | 198 x 51 x 52 | RESERVED | Section 4D.3.4; Table 4D-5; and Fig. 4A-59 (Sheets 1-2) of Operating Unit Group 10, Chapter 4 of this Permit. | RESERVED | RESERVED | RESERVED | RESERVED |

**Table III.10.F.A – Containment Building Unit Description**

| Mixed Waste Containment Building Units[a] & Systems | Dimensions (LxWxH) (in feet) | Unit Description | Narrative Description and Figures | Container Storage Areas[b] | Tank Systems[c] | Containment Building Capacity (cu ft) | Manage Free Liquids |
|---|---|---|---|---|---|---|---|
| P-0431A General Filter Rm | RESERVED | RESERVED | Section 4D.3.5; Table 4D-5; and Fig. 4A-59 (Sheets 1-2) of Operating Unit Group 10, Chapter 4 of this Permit. | RESERVED | RESERVED | RESERVED | RESERVED |
| **LAW Vitrification Plant** | | | | | | | |
| L-0112 LAW LSM Gallery Containment Building | 150x62x24 | RESERVED | Section 4E.3.1; Table 4E-5; and Fig. 4A-59 (Sheets 1-2) of Operating Unit Group 10, Chapter 4 of this Permit. | RESERVED | RESERVED | RESERVED | Yes |
| LAW Container Finishing Containment Building | | RESERVED | Section 4E.3.2; Table 4E-5; and Fig. 4A-59 (Sheets 1-2) of Operating Unit Group 10, Chapter 4 of this Permit. | RESERVED | RESERVED | RESERVED | No |
| L-0109B Swabbing Area Line 2 | 21×15×24 | RESERVED | Section 4E.3.2; Table 4E-5; and Fig. 4A-59 (Sheets 1-2) of Operating Unit Group 10, Chapter 4 of this Permit. | RESERVED | RESERVED | RESERVED | RESERVED |
| L-0109C Decontamination Area Line 2 | 18×15×24 | RESERVED | Section 4E.3.2; Table 4E-5; and Fig. 4A-59 (Sheets 1-2) of Operating Unit 10, Chapter 4 of this Permit. | RESERVED | RESERVED | RESERVED | RESERVED |
| L-0109D Inert Fill Area Line 2 | 55×15×24 | RESERVED | Section 4E.3.2; Table 4E-5; and Fig. 4A-59 (Sheets 1-2) of Operating Unit Group 10, Chapter 4 of this Permit. | RESERVED | RESERVED | RESERVED | RESERVED |
| L-0115B Swabbing Area Line 1 | 21×15×24 | RESERVED | Section 4E.3.2; Table 4E-5; and Fig. 4A-59 (Sheets 1-2) of Operating Unit Group 10, Chapter 4 of this Permit. | RESERVED | RESERVED | RESERVED | RESERVED |

**Table III.10.F.A – Containment Building Unit Description**

| Mixed Waste Containment Building Units[a] & Systems | Dimensions (LxWxH) (in feet) | Unit Description | Narrative Description and Figures | Container Storage Areas[b] | Tank Systems[c] | Containment Building Capacity (cu ft) | Manage Free Liquids |
|---|---|---|---|---|---|---|---|
| L-0115C Decontamination Area Line 1 | 18×15×24 | RESERVED | Section 4E.3.2; Table 4E-5; and Fig. 4A-59 (Sheets 1-2) of Operating Unit Group 10, Chapter 4 of this Permit. | RESERVED | RESERVED | RESERVED | RESERVED |
| L-0115D Inert Fill Area Line 1 | 55×15×24 | RESERVED | Section 4E.3.2; Table 4E-5; and Fig. 4A-59 (Sheets 1-2) of Operating Unit Group 10, Chapter 4 of this Permit. | RESERVED | RESERVED | RESERVED | RESERVED |
| L-0109E Container/Monitoring/ Export Area | 19×18×14 | RESERVED | Section 4E.3.2; Table 4E-5; and Fig. 4A-59 (Sheets 1-2) of Operating Unit Group 10, Chapter 4 of this Permit. | RESERVED | RESERVED | RESERVED | RESERVED |
| L-0115E Container/Monitoring/ Export Area | 19×18×14 | RESERVED | Section 4E.3.2; Table 4E-5; and Fig. 4A-59 (Sheets 1-2) of Operating Unit Group 10, Chapter 4 of this Permit. | RESERVED | RESERVED | RESERVED | RESERVED |
| L-0119B LAW Consumable Import/Export Containment Building | 30x28x17 | RESERVED | Section 4E.3.3; Table 4E-5; and Fig. 4A-59 (Sheets 1-2) of Operating Unit Group 10, Chapter 4 of this Permit. | RESERVED | RESERVED | RESERVED | Yes |
| L-226A LAW C3 Workshop Containment Building | 34x22x19 | RESERVED | Section 4E.3.4; Table 4E-5; and Fig. 4A-59 (Sheets 1-2) of Operating Unit Group 10, Chapter 4 of this Permit. | RESERVED | RESERVED | RESERVED | RESERVED |
| LAW Pour Cave Containment Building | | RESERVED | Section4E.3.5; Table 4E-5; and Fig. 4A-59 (Sheets 1-2) of Operating Unit Group 10, Chapter 4 of this Permit. | RESERVED | RESERVED | RESERVED | RESERVED |

**Table III.10.F.A – Containment Building Unit Description**

| Mixed Waste Containment Building Units[a] & Systems | Dimensions (LxWxH) (in feet) | Unit Description | Narrative Description and Figures | Container Storage Areas[b] | Tank Systems[c] | Containment Building Capacity (cu ft) | Manage Free Liquids |
|---|---|---|---|---|---|---|---|
| L-B015A Melter 1 Pour Cave | 16.5×20x23 | RESERVED | Section 4E.3.5; Table 4E-5; and Fig. 4A-59 (Sheets 1-2) of Operating Unit Group 10, Chapter 4 of this Permit. | RESERVED | RESERVED | RESERVED | RESERVED |
| L-B013C Melter 1 Pour Cave | 16.5×20x23 | RESERVED | Section 4E.3.5; Table 4E-5; and Fig. 4A-59 (Sheets 1-2) of Operating Unit Group 10, Chapter 4 of this Permit. | RESERVED | RESERVED | RESERVED | RESERVED |
| L-B013B Melter 2 Pour Cave | 16.5×20x23 | RESERVED | Section 4E.3.5; Table 4E-5; and Fig. 4A-59 (Sheets 1-2) of Operating Unit Group 10, Chapter 4 of this Permit. | RESERVED | RESERVED | RESERVED | RESERVED |
| L-B011C Melter 2 Pour Cave | 16.5×20x23 | RESERVED | Section 4E.3.5; Table 4E-5; and Fig. 4A-59 (Sheets 1-2) of Operating Unit Group 10, Chapter 4 of this Permit. | RESERVED | RESERVED | RESERVED | RESERVED |
| L-B011B Future Melter 3 Pour Cave | 16.5×20x23 | RESERVED | Section 4E.3.5; Table 4E-5; and Fig. 4A-59 (Sheets 1-2) of Operating Unit 10, Chapter 4 of this Permit. | RESERVED | RESERVED | RESERVED | RESERVED |
| L-B009B Future Melter 3 Pour Cave | 16.5×20x23 | RESERVED | Section 4E.3.5; Table 4E-5; and Fig. 4A-59 (Sheets 1-2) of Operating Unit Group 10, Chapter 4 of this Permit. | RESERVED | RESERVED | RESERVED | RESERVED |
| LAW Buffer Container Containment Building | | RESERVED | Section 4E.3.6; Table 4E-5; and Fig. 4A-59 (Sheets 1-2) of Operating Unit Group 10, Chapter 4 of this Permit. | RESERVED | RESERVED | RESERVED | RESERVED |

**Table III.10.F.A – Containment Building Unit Description**

| Mixed Waste Containment Building Units[a] & Systems | Dimensions (LxWxH) (in feet) | Unit Description | Narrative Description and Figures | Container Storage Areas[b] | Tank Systems[c] | Containment Building Capacity (cu ft) | Manage Free Liquids |
|---|---|---|---|---|---|---|---|
| L-B025C Container Buffer Store | 22x22x23 | RESERVED | Section 4E.3.6; Table 4E-5; and Fig. 4A-59 (Sheets 1-2) of Operating Unit Group 10, Chapter 4 of this Permit. | RESERVED | RESERVED | RESERVED | RESERVED |
| L-B025D Container Rework | 22x14x23 | RESERVED | Section 4E.3.6; Table 4E-5; and Fig. 4A-59 (Sheets 1-2) of Operating Unit Group 10, Chapter 4 of this Permit. | RESERVED | RESERVED | RESERVED | RESERVED |
| **HLW Vitrification Plant** | | | | | | | |
| HLW Melter Cave 1 Containment Building:<br>H-0117 Melter Cave 1<br>H-0116B Melter Cave 1 C3/C5 Airlock<br>H-0310A Melter Cave 1 Equipment Decon Pit | <br>75 x 32 x 54<br>24 x 25 x 54<br>20 x 9 x 10 | RESERVED | Section 4F.3.1; Table 4D-5; and Fig. 4A-59 (Sheets 1-2) of Operating Unit Group 10, Chapter 4 of this Permit. | RESERVED | RESERVED | RESERVED | RESERVED |
| HLW Melter Cave 2 Containment Building:<br>H-0106 Melter Cave 2<br>H-0105B Melter Cave 2 C3/C5 Airlock<br>H-0304A Melter Cave 2 Equipment Decon Pit | <br>75 x 32 x 54<br>24 x 25 x 54<br>20 x 9 x 10 | RESERVED | Section 4F.3.1; Table 4D-5; and Fig. 4A-59 (Sheets 1-2) of Operating Unit Group 10, Chapter 4 of this Permit. | RESERVED | RESERVED | RESERVED | RESERVED |
| H-0136 IHLW Canister Handling Cave Containment Building | 18 x 140 x 54 | RESERVED | Section 4F.3.2; Table 4D-5; and Fig. 4A-59 (Sheets 1-2) of Operating Unit Group 10, Chapter 4 of this Permit. | RESERVED | RESERVED | RESERVED | No |

**Table III.10.F.A – Containment Building Unit Description**

| Mixed Waste Containment Building Units[a] & Systems | Dimensions (LxWxH) (in feet) | Unit Description | Narrative Description and Figures | Container Storage Areas[b] | Tank Systems[c] | Containment Building Capacity (cu ft) | Manage Free Liquids |
|---|---|---|---|---|---|---|---|
| H-0133 IHLW Canister Swab and Monitoring Cave Containment Building | 41 x 11 x 54 | RESERVED | Section 4F.3.3; Table 4D-5; and Fig. 4A-59 (Sheets 1-2) of Operating Unit Group 10, Chapter 4 of this Permit. | RESERVED | RESERVED | RESERVED | No |
| HLW C3 Workshop Containment Building:<br>H-0311A C3 Workshop<br>H-0311B MSM Maintenance Workshop | <br><br>19 x 30 x 22<br>58 x 69 x 22 | RESERVED | Section 4F.3.4; Table 4D-5; and Fig. 4A-59 (Sheets 1-2) of Operating Unit Group 10, Chapter 4 of this Permit. | RESERVED | RESERVED | RESERVED | No |
| H-0104 HLW Filter Cave Containment Building | 105 x 36 x 36 | RESERVED | Section 4F.3.5; Table 4D-5; and Fig. 4A-59 (Sheets 1-2) of Operating Unit Group 10, Chapter 4 of this Permit. | RESERVED | RESERVED | RESERVED | No |
| H-B032 HLW Pour Tunnel 1 Containment Building | 85 x 11 x 30 | RESERVED | Section 4F.3.6; Table 4D-5; and Fig. 4A-59 (Sheets 1-2) of Operating Unit Group 10, Chapter 4 of this Permit. | RESERVED | RESERVED | RESERVED | No |
| H-B005A HLW Pour Tunnel2 Containment Building | 85 x 11 x 30 | RESERVED | Section 4F.3.6; Table 4D-5; and Fig. 4A-59 (Sheets 1-2) of Operating Unit Group 10, Chapter 4 of this Permit. | RESERVED | RESERVED | RESERVED | No |
| HLW Waste Handling Area Containment Building:<br>H-0410B E&I Room<br>H-0411 Waste Handling Room | <br><br>17 x 20 x 10<br>25 x 54 x 10 | RESERVED | Section 4F.3.8; Table 4D-5; and Fig. 4A-59 (Sheets 1-2) of Operating Unit Group 10, Chapter 4 of this Permit. | RESERVED | RESERVED | RESERVED | RESERVED |
| HLW Drum Swabbing and Monitoring Area: | | RESERVED | Section 4F.3.7; Table 4D-5; and Fig. 4A-59 (Sheets 1-2) | RESERVED | RESERVED | RESERVED | RESERVED |

**Table III.10.F.A – Containment Building Unit Description**

| Mixed Waste Containment Building Units[a] & Systems | Dimensions (LxWxH) (in feet) | Unit Description | Narrative Description and Figures | Container Storage Areas[b] | Tank Systems[c] | Containment Building Capacity (cu ft) | Manage Free Liquids |
|---|---|---|---|---|---|---|---|
| H-0126A Crane Maintenance Room<br>H-0126B Swabbing and Monitoring Room<br>H-028 Cask Import/Export Room | 15 x 20 x 31<br>30 x 18 x 31<br>15 x 45 x 43 | | of Operating Unit Group 10, Chapter 4 of this Permit. | | | | |

[a]Containment Building Units include associated process systems and equipment
[b]Requirements pertaining to the containers in the Containment Building Units are specified in Section III.10.D. of this Permit.
[c]Requirements pertaining to the tanks in the Containment Building Units are specified in Section III.10.E. of this Permit.

1

**Table III.10.F.B – Containment Building Primary[a] Containment Sump Systems**

| Sump I.D.# & Room Location | Maximum Capacity (gallons) | Dimensions[b] (feet) & Materials of Construction | Maximum Allowable Liquid Height (inches) | Secondary Containment Volume (gallons) | Unit Description Drawings |
|---|---|---|---|---|---|
| PWD-SUMP-00026 P-0123 (El. 0') | RESERVED | RESERVED | RESERVED | RESERVED | RESERVED |
| PWD-SUMP-00028 P-0123 (El. 0') | RESERVED | RESERVED | RESERVED | RESERVED | RESERVED |
| PWD-SUMP-00029 P-0123 (El. 0') | RESERVED | RESERVED | RESERVED | RESERVED | RESERVED |
| PWD-SUMP-00032 P-0123A | RESERVED | RESERVED | RESERVED | RESERVED | RESERVED |
| PWD-SUMP-00033 P-0123A (El. 0') | RESERVED | RESERVED | RESERVED | RESERVED | RESERVED |

**Table III.10.F.B – Containment Building Primary[a] Containment Sump Systems**

| Sump I.D.# & Room Location | Maximum Capacity (gallons) | Dimensions[b] (feet) & Materials of Construction | Maximum Allowable Liquid Height (inches) | Secondary Containment Volume (gallons) | Unit Description Drawings |
|---|---|---|---|---|---|
| [a] Primary sumps are defined in Permit Section III.10.C, and must comply with dangerous waste tank system requirements for tanks as described in WAC-173-303-640.<br>[b]Dimensions listed are based on permitted design. Actual dimensions may vary within plus or minus (TBD). | | | | | |

1

**Table III.10.F.C – Containment Building Secondary Containment Systems Including Sumps and Floor Drains**

| Sump or Drain Line I.D.# & Room Location | Maximum Sump (gallons) or Drain Line (gallons per minute) Capacity | Sump Type/Nominal Operating Volume (gallons) | Sump or Drain Line Dimensions[a] (inches) & Materials of Construction | Engineering Description (Drawing Nos., Specifications No.'s, etc.) |
|---|---|---|---|---|
| RESERVED | RESERVED | RESERVED | RESERVED | RESERVED |
| [a]Dimensions listed are based on permitted design. Actual dimensions may vary within plus or minus (TBD). | | | | |

2

**Table III.10.F.D – Containment Building Leak Detection System Instrumentation and Parameters**

| Containment Building Locator and Name (including P&ID) | Type of Leak Detection Instrument | Location of Leak Detection Instrument (Tag No.) | Leak Detection Instrument Range | Expected Range | Fail States | Leak Detection Instrument Accuracy | Leak Detection Instrument Calibration Method No. and Range |
|---|---|---|---|---|---|---|---|
| RESERVED | RESERVED | RESERVED | RESERVED | RESERVED | RESERVED | RESERVED | RESERVED |
| [a]Locator (including P&ID designator) is located on Permit Table III.10.F.C – Containment Building Secondary Containment Systems Including Sumps and Floor Drains. | | | | | | | |

3

4

This page intentionally left blank.

## III.10.G PRETREATMENT PLANT MISCELLANEOUS UNIT SYSTEMS

Unless otherwise noted in Table III.10.G.A, for purposes of Permit Section III.10.G., where reference is made to WAC 173-303-640, the following substitutions apply: substitute the terms "Pretreatment Plant Miscellaneous Unit System(s)" for "tank system(s)," "miscellaneous unit(s)" for "tank(s)," "equipment" for "ancillary equipment," and "miscellaneous unit(s) or equipment of a Pretreatment Plant Miscellaneous Unit System" for "component(s)" in accordance with WAC 173-303-680. Miscellaneous unit systems, exempt from the WAC-173-303-640 requirements in Permit Section III.10.G are noted as exempt in Table III.10.G.A.

### III.10.G.1 Waste and Storage Limits

**III.10.G.1.a** The Permittees may process, in the Pretreatment Plant Miscellaneous Unit Systems listed in Permit Table III.10.G.A, as approved/modified pursuant to Permit Condition III.10.G.10, all dangerous and mixed waste listed in the Part A Forms, Operating Unit Group 10, Chapter 1 of this Permit, and in accordance with in the WAP, Operating Unit Group 10, Chapter 3 of this Permit, as approved pursuant to Permit Condition III.10.C.3. Total Pretreatment Plant Miscellaneous Unit dangerous and mixed waste storage at the Facility will not exceed the limits specified in Permit Table III.10.G.A.

**III.10.G.1.b** The Permittees may process dangerous and mixed waste only in approved Pretreatment Plant Miscellaneous Unit Systems listed in Permit Table III.10.G.A in accordance with Permit Section III.10.G and in accordance with Operating Unit Group 10, Chapters 1.0 and 4.0 of this Permit, and Operating Unit Group 10, Appendices 8.1 through 8.15 of this Permit, as approved pursuant to Permit Conditions III.10.G.10.b. through e. The Permittees will limit the total volume of wastes to quantities specified for the individual miscellaneous units listed in Permit Table III.10.G.A.

**III.10.G.1.c** The Permittees will manage ignitable and reactive, and incompatible waste in accordance with WAC 173-303-395(1). Any Pretreatment Plant Miscellaneous Unit System specified in Permit Tables III.10.G.A and III.10.G.B in which ignitable, reactive or incompatible waste are managed will meet the requirements specified in WAC 173-303-640(9) and (10), in accordance to WAC 173-303-680.

**III.10.G.1.d** The Permittees will ensure all certifications required by specialists (e.g., independent, qualified, registered professional engineer; independent corrosion expert; independent, qualified installation inspector; etc.) use the following statement or equivalent pursuant to Permit Condition III.10.C.10:

"I, (Insert Name) have (choose one or more of the following: overseen, supervised, reviewed, and/or certified) a portion of the design or installation of a new miscellaneous unit system or component located at (address), and owned/operated by (name(s)). My duties were: (e.g., installation inspector, testing for tightness, etc.), for the following miscellaneous unit system components (e.g., the venting piping, etc.), as required by the Dangerous Waste Regulations, namely, WAC 173-303-640(3) (applicable paragraphs (i.e., (a) through (g)) in accordance with WAC 173-303-680).

"I certify under penalty of law that I have personally examined and am familiar with the information submitted in this document and all attachments and that, based on my inquiry of those individuals immediately responsible for obtaining the information, I believe that the information is true, accurate, and complete. I am aware that there are significant penalties for submitting false information, including the possibility of fine and imprisonment."

**III.10.G.1.e** In all future narrative permit submittals, the Permittees will include miscellaneous unit system names with the unit designation (e.g., Waste Feed Evaporator Separator Vessels are designated V11002A and V11002B, respectively).

**III.10.G.2 Miscellaneous Unit Systems Design and Construction [WAC 173-303-640, in accordance with WAC 173-303-680(2) and WAC 173-303-340].**

**III.10.G.2.a** The Permittees will construct the Pretreatment Plant Miscellaneous Unit Systems identified in Permit Table III.10.G.A, as specified in Operating Unit Group 10, Appendices 8.1 through 8.14 of this Permit, as approved pursuant to Permit Conditions III.10.G.10.b., III.10.G.10.c., and III.10.G.10.d.

**III.10.G.2.b** The Permittees will construct secondary containment systems for the Pretreatment Plant Miscellaneous Unit Systems identified in Permit Tables III.10.G.A and III.10.G.B, as specified in Operating Unit Group 10, Appendices 8.2, 8.4 through 8.14 of this Permit, as approved pursuant to Permit Conditions III.10.G.10.b., III.10.G.10.c., and III.10.G.10.d.

**III.10.G.2.c** Modifications to approved design, plans, and specifications in Operating Unit Group 10 of this Permit for the Pretreatment Plant Miscellaneous Unit Systems will be allowed only in accordance with Permit Conditions III.10.C.2.e. and f., or III.10.C.2.g., III.10.C.9.d., e., and h.

**III.10.G.3 Miscellaneous Unit System Installation and Certification [WAC 173-303-640, in accordance with WAC 173-303-680(2) and (3), and WAC 173-303-340].**

**III.10.G.3.a** The Permittees must ensure that proper handling procedures are adhered to in order to prevent damage to Pretreatment Plant Miscellaneous Unit Systems during installation. Prior to covering, enclosing, or placing a new Pretreatment Plant Miscellaneous Unit System(s) or component(s) in use, an independent, qualified, installation inspector or an independent, qualified, registered professional engineer, either of whom is trained and experienced in the proper installation of similar systems or components, must inspect the system for the presence of any of the following items:

**III.10.G.3.a.i** Weld breaks;

**III.10.G.3.a.ii** Punctures;

**III.10.G.3.a.iii** Scrapes of protective coatings;

**III.10.G.3.a.iv** Cracks;

**III.10.G.3.a.v** Corrosion;

**III.10.G.3.a.vi** Other structural damage or inadequate construction/installation;

**III.10.G.3.a.vii** All discrepancies must be remedied before the Pretreatment Plant Miscellaneous Unit Systems are covered, enclosed, or placed in use [WAC 173-303-640(3)(c) in accordance with WAC 173-303-680(2) and (3)].

**III.10.G.3.b** For Pretreatment Plant Miscellaneous Unit Systems or components that are placed underground and that are back-filled, the Permittees must provide a backfill material that is a non-corrosive, porous, homogeneous substance. The backfill must be installed so that it is placed completely around the miscellaneous unit and compacted to ensure that the miscellaneous unit and piping are fully and uniformly supported [WAC 173-303-640(3)(d), in accordance with WAC 173-303-680(2) and (3)].

**III.10.G.3.c** The Permittees must test for tightness all new Pretreatment Plant miscellaneous units and equipment, prior to being covered, enclosed, or placed into use. If the Pretreatment Plant Miscellaneous Unit Systems are found not to be tight, all repairs necessary to remedy the

leak(s) in the system must be performed prior to the Pretreatment Plant Miscellaneous Units Systems being covered, enclosed, or placed in use [WAC 173-303-640(3)(e), in accordance with WAC 173-303-680(2) and (3)].

**III.10.G.3.d** The Permittees must ensure Pretreatment Plant Miscellaneous Unit Systems equipment is supported and protected against physical damage and excessive stress due to settlement, vibration, expansion, or contraction [WAC 173-303-640(3)(f), in accordance with WAC 173-303-680(2) and (3)].

**III.10.G.3.e** The Permittees must provide the type and degree of corrosion protection recommended by an independent corrosion expert, based on the information provided in Operating Unit Group 10, Appendices 8.9 and 8.11 as approved pursuant to Permit Conditions III.10.G.10.b.i., III.10.G.10.b.iv., III.10.G.10.b.v., III.10.G.10.c.i., III.10.G.10.c.iv., III.10.G.10.c.v., and III.10.G.10.d.i., III.10.G.10.d.iv. III.10.G.10.d.v., or other corrosion protection if Ecology believes other corrosion protection is necessary to ensure the integrity of the Pretreatment Plant Miscellaneous Unit Systems during use of the Pretreatment Plant Miscellaneous Unit Systems. The installation of a corrosion protection system that is field fabricated must be supervised by an independent corrosion expert to ensure proper installation [WAC 173-303-640(3)(g), in accordance with WAC 173-303-680(2) and (3)].

**III.10.G.3.f** Prior to initial receipt of dangerous and/or mixed waste in the WTP Unit, the Permittees will obtain, and keep on file in the WTP Unit operating record, written statements by those persons required to certify the design of the Pretreatment Plant Miscellaneous Unit Systems and supervise the installation of the Pretreatment Plant Miscellaneous Unit Systems, as specified in WAC 173-303-640(3)(b), (c), (d), (e), (f), and (g), in accordance with WAC 173-303-680, attesting that each Pretreatment Plant Miscellaneous Unit System and corresponding containment system listed in Permit Tables III.10.G.A and III.10.G.B, as approved/modified pursuant to Permit Condition III.10.G.10., were properly designed and installed, and that repairs, in accordance with WAC 173-303-640(3)(c) and (e), were performed [WAC 173-303-640(3)(a), WAC 173-303-640(3)(h), in accordance with WAC 173-303-680(3)].

**III.10.G.3.g** The independent Pretreatment Plant Miscellaneous Unit System installation inspection and subsequent written statements will be certified in accordance with WAC 173-303-810(13)(a) as modified pursuant to Permit Condition III.10.G.1.d., comply with all requirements of WAC 173-303-640(3)(h), in accordance with WAC 173-303-680, and will consider, but not be limited to, the following miscellaneous unit system installation documentation:

**III.10.G.3.g.i** Field installation report with date of installation;

**III.10.G.3.g.ii** Approved welding procedures;

**III.10.G.3.g.iii** Welder qualifications and certification;

**III.10.G.3.g.iv** Hydro-test reports, as applicable, in accordance with the American Society of Mechanical Engineers Boiler and Pressure Vessel Code, Section VIII, Division 1, American Petroleum Institute (API) Standard 620, or Standard 650 as applicable;

**III.10.G.3.g.v** Tester credentials;

**III.10.G.3.g.vi** Field inspector credentials;

**III.10.G.3.g.vii** Field inspector reports;

**III.10.G.3.g.viii** Field waiver reports; and

**III.10.G.3.g.ix** Non-compliance reports and corrective action (including field waiver reports) and repair reports.

**III.10.G.4 Integrity Assessments [WAC 173-303-340 and WAC 173-303-640, in accordance with WAC 173-303-680(2) and (3)].**

**III.10.G.4.a** The Permittees will ensure periodic integrity assessments are conducted on the Pretreatment Plant Miscellaneous Unit Systems listed in Permit Table III.10.G.A, as approved/modified pursuant to Permit Condition III.10.G.10., over the term of this Permit in accordance with WAC 173-303-680(2) and (3) as specified in WAC 173-303-640(3)(b), following the description of the integrity assessment program and schedule in Operating Unit Group 10, Addendum E of this Permit, as approved pursuant to Permit Conditions III.10.G.10.e.i. and III.10.C.5.c. Results of the integrity assessments will be included in the WTP Unit operating record until ten (10) years after post-closure, or corrective action is complete and certified, whichever is later.

**III.10.G.4.b** The Permittees will address problems detected during Pretreatment Plant Miscellaneous Unit Systems integrity assessments specified in Permit Condition III.10.G.4.a. following the integrity assessment program in Operating Unit Group 10, Addendum E of this Permit, as approved pursuant to Permit Conditions III.10.G.10.e.i. and III.10.C.5.c.

**III.10.G.4.c** The Permittees must immediately and safely remove from service any Pretreatment Plant Miscellaneous Unit System or secondary containment system which through an integrity assessment is found to be "unfit for use" as defined in WAC 173-303-040, following Permit Condition III.10.G.5.j.i. through iv., and vi. The affected Pretreatment Plant Miscellaneous Unit or secondary containment system must be either repaired or closed in accordance with Permit Condition III.10.G.5.j.v. [WAC 173-303-640(7)(e) and (f) and WAC 173-303-640(8), in accordance with WAC 173-303-680(3)].

**III.10.G.5 Miscellaneous Unit Management Practices**

**III.10.G.5.a** No dangerous and/or mixed waste will be managed in the Pretreatment Plant Miscellaneous Unit Systems unless the operating conditions, specified under Permit Condition III.10.G.5, are complied with.

**III.10.G.5.b** The Permittees will install and test all process and leak detection system monitoring/instrumentation, as specified in Permit Table III.10.G.C, as approved/modified pursuant to Permit Condition III.10.G.10, in accordance with Operating Unit Group 10, Appendices 8.1, 8.2, and 8.14 of this Permit, as approved pursuant to Permit Condition III.10.G.10.d.x.

**III.10.G.5.c** The Permittees will not place dangerous and/or mixed waste, treatment reagents, or other materials in the Pretreatment Plant Miscellaneous Unit Systems if these substances could cause the systems to rupture, leak, corrode, or otherwise fail [WAC 173-303-640(5)(a), in accordance with WAC 173-303-680(2)].

**III.10.G.5.d** The Permittees will operate the Pretreatment Plant Miscellaneous Unit Systems to prevent spills and overflows using the description of controls and practices, as required under WAC 173-303-640(5)(b), described in Permit Condition III.10.C.5, and Operating Unit Group 10, Appendix 8.18 of this Permit, as approved pursuant to Permit Condition

III.10.G.10.e.iv [WAC 173-303-640(5)(b), in accordance with WAC 173-303-680(2) and (3) and WAC 173-303-806(4)(c)(ix)].

**III.10.G.5.e** For routinely non-accessible Pretreatment Plant Miscellaneous Unit Systems, as specified in Operating Unit Group 10, Chapter 4 of this Permit, as updated pursuant to Permit Condition III.10.G.10.e.vi., the Permittees will mark all routinely non-accessible Pretreatment Plant Miscellaneous Unit System access points with labels or signs to identify the waste contained in the units. The label, or sign, must be legible at a distance of at least fifty (50) feet and must bear a legend which identifies the waste in a manner which adequately warns employees, emergency response personnel, and the public of the major risk(s) associated with the waste being stored or treated in the miscellaneous unit system(s). For the purposes of this Permit condition, "routinely non-accessible" means personnel are unable to enter these areas while waste is being managed in them [WAC 173-303-640(5)(d), in accordance with WAC 173-303-680(2)].

**III.10.G.5.f** For all Pretreatment Plant Miscellaneous Unit Systems not addressed in Permit Condition III.10.G.5.e, the Permittees will mark all these miscellaneous unit systems holding dangerous and/or mixed waste with labels or signs to identify the waste contained in the unit. The labels, or sign, must be legible at a distance of at least fifty (50) feet, and must bear a legend which identifies the waste in a manner which adequately warns employees, emergency response personnel, and the public of the major risk(s) associated with the waste being stored or treated in the miscellaneous unit system(s) [WAC 173-303-640(5)(d), in accordance with WAC 173-303-680(2)].

**III.10.G.5.g.** The Permittees will ensure that the secondary containment systems for Pretreatment Plant Miscellaneous Unit Systems listed in Permit Tables III.10.G.A and III.10.G.B, as approved/modified pursuant to Permit Condition III.10.G.10, are free of cracks or gaps to prevent any migration of dangerous and/or mixed waste or accumulated liquid out of the system to the soil, ground water, or surface water at any time waste is in the Pretreatment Plant Miscellaneous Units System. Any indication that a crack or gap may exist in the containment systems will be investigated and repaired in accordance with Operating Unit Group 10, Appendix 8.18 of this Permit, as approved pursuant to Permit Condition III.10.G.10.e.v. [WAC 173-303–640(4)(b)(i), WAC 173-303–640(4)(e)(i)(C), and WAC 173-303-640(6) in accordance with WAC 173-303-680(2) and (3), WAC 173-303-806(4)(i)(i)(B), and WAC 173-303-320].

**III.10.G.5.i.** An impermeable coating, as specified in Operating Unit Group 10, Appendices 8.4, 8.5,8.7, 8.9, 8.11, and 8.12 of this Permit, as approved pursuant to Permit Condition III.10.G.10.b.v. of this Permit, will be maintained for all concrete containment systems and concrete portions of containment systems for each Pretreatment Plant Miscellaneous Unit System listed in Permit Tables III.10.G.A and III.10.G.B, as approved/modified pursuant to Permit Condition III.10.G.10 [concrete containment systems that do not have a liner pursuant to WAC-173-303-640(4)(e)(i), in accordance with WAC 173-303-680(2), and have construction joints, will meet the requirements of WAC 173-303-640(4)(e)(ii)(C), in accordance with WAC 173-303-680(2)]. The coating will prevent migration of any dangerous and mixed waste into the concrete. All coatings will meet the following performance standards:

**III.10.G.5.i.i.** The coating must seal the containment surface such that no cracks, seams, or other avenues through which liquid could migrate are present;

**III.10.G.5.i.ii.** The coating must be of adequate thickness and strength to withstand the normal operation of equipment and personnel within the given area such that degradation or physical

damage to the coating or lining can be identified and remedied before dangerous and mixed waste could migrate from the system; and

**III.10.G.5.i.iii.** The coating must be compatible with the dangerous and mixed waste, treatment reagents, or other materials managed in the containment system [WAC 173-303-640(4)(e)(ii)(D), in accordance with WAC 173-303-680(2) and (3) and WAC 173-303-806(4)(i)(i)(A)].

**III.10.G.5.j.** The Permittees will inspect all secondary containment systems for the Pretreatment Plant Miscellaneous Unit Systems listed in Permit Tables III.10.G.A and III.10.G.B., as approved/modified pursuant to Permit Condition III.10.G.10., in accordance with the Inspection Plan specified in Operating Unit Group 10, Chapter 6 of this Permit, as approved pursuant to Permit Conditions III.10.G.10.e.i. and III.10.C.5.c., and take the following actions if a leak or spill of dangerous and/or mixed waste is detected in these containment systems [WAC 173-303-640(5)(c) and WAC 173-303-640(6), in accordance with WAC 173-303-680(2) and (3), WAC 173-303-320, and WAC 173-303-806(4)(i)(i)(B)]:

**III.10.G.5.j.i.** Immediately and safely stop the flow of dangerous and/or mixed waste into the miscellaneous unit system or secondary containment system;

**III.10.G.5.j.ii.** Determine the source of the dangerous and/or mixed waste;

**III.10.G.5.j.iii.** Remove the waste from the containment area in accordance with WAC 173-303-680(2) and (3), as specified in WAC 173-303-640(7)(b). The dangerous and/or mixed waste removed from containment areas of miscellaneous unit systems will be, as a minimum, managed as dangerous and/or mixed waste;

**III.10.G.5.j.iv.** If the cause of the release was a spill that has not damaged the integrity of the miscellaneous unit system, the Permittees may return the miscellaneous unit system to service in accordance with WAC 173-303-680(2) and (3), as specified in WAC 173-303-640(7)(e)(ii). In such a case, the Permittees will take action to ensure the incident that caused liquid to enter the containment system will not reoccur [WAC 173-303-320(3)];

**III.10.G.5.j.v.** If the source of the dangerous and/or mixed waste is determined to be a leak from the primary Pretreatment Plant Miscellaneous Unit System into the secondary containment system, or the system is unfit for use as determined through an integrity assessment or other inspection, the Permittees must comply with the requirements of WAC 173-303-640(7), and take the following actions:

A Close the miscellaneous unit following procedures in WAC 173-303-640(7)(e)(i) and in accordance with WAC 173-303-680, and Operating Unit Group 10, Chapter 11 of this Permit, as approved pursuant to Permit Condition III.10.C.8; or

B. Repair and re-certify (in accordance with WAC 173-303-810(13)(a), as modified pursuant to Permit Condition III.10.G.1.d.) the Pretreatment Plant Miscellaneous Unit System in accordance with Operating Unit Group 10, Appendix 8.18 of this Permit, as approved pursuant to Permit Condition III.10.G.10.e.v. before the Pretreatment Plant Miscellaneous Unit System is placed back into service [WAC 173-303-640(7)(e)(iii) and WAC 173-303-640(7)(f), in accordance with WAC 173-303-680].

**III.10.G.5.j.vi.** The Permittees will document, in the operating record, actions/procedures taken to comply with i. through v. above, as specified in WAC 173-303-640(6)(d) and in accordance with WAC 173-303-680(2) and (3).

**III.10.G.5.j.vii.** In accordance with WAC 173-303-680(2) and (3), the Permittees will notify and report releases to the environment to Ecology as specified in WAC 173-303-640(7)(d).

**III.10.G.5.k.** If liquids (e.g., Dangerous and/or mixed waste leaks and spills, precipitation, fire water, liquids from damaged or broken pipes) cannot be removed from the secondary containment system within twenty-four (24) hours, Ecology will be verbally notified within twenty-four (24) hours of discovery. The notification will provide the information in A., B., and C. listed below. The Permittees will provide Ecology with a written demonstration, within seven (7) business days, identifying at a minimum [WAC 173-303-640(4)(c)(iv) and WAC 173-303-640(7)(b)(ii), in accordance with WAC 173-303-680(3) and WAC 173-303-806(4)(i)(i)(B)]:

A. Reasons for delayed removal.

B. Measures implemented to ensure continued protection of human health and the environment.

C. Current actions being taken to remove liquids from secondary containment.

**III.10.G.5.l.** The Permittees will operate the Pretreatment Plant Miscellaneous Unit Systems in accordance with Operating Unit Group 10, Chapter 4 as updated pursuant to Permit Condition III.10.G.10.e.vi. and Appendix 8.18 of this Permit, as approved pursuant to Permit Condition III.10.G.10.e., and the following:

**III.10.G.5.l.i.** The Permittees will operate the Pretreatment Plant Miscellaneous Unit Systems in order to maintain the systems and process parameters listed in Permit Table III.10.G.C. as approved/modified pursuant to Permit Condition III. 10.G.10., within the operating trips and operating ranges specified in Permit Table III.10.G.C., and consistent with assumptions and basis which are reflected in Operating Unit Group 10, Appendix 6.3, as approved pursuant to Permit Condition III.10.C.11.b. [WAC 173-303-815(2)(b)(ii) and WAC 173-303-680(2) and (3)]. For the purposes of this Permit Condition, Operating Unit Group 10, Appendix 6.3. will be superseded by Appendix 6.4. upon its approval pursuant to either Permit Conditions III.10.C.11.c. or III.10.C.11.d.

**III.10.G.5.l.ii.** The Permittees will calibrate/function test the instruments listed in Permit Table III.10.G.C., in accordance with Operating Unit Group 10, Appendix 8.18, as approved pursuant to Permit Condition III.10.G.10.e.xii.

**III.10.G.5.m.** For any portion of the Pretreatment Plant Miscellaneous Unit Systems which have the potential for formation and accumulation of hydrogen gases, the Permittees will operate the portion to maintain hydrogen levels below the lower explosive limit [WAC 173-303-815(2)(b)(ii)].

**III.10.G.5.n.** For each miscellaneous unit holding dangerous waste which are acutely or chronically toxic by inhalation, the Permittees will operate the system to prevent escape of vapors, fumes, or other emissions into the air [WAC 173-303-806(4)(i)(i)(B) and WAC 173-303-640(5)(e), in accordance with WAC 173-303-680].

### III.10.G.6 Air Emissions

**III.10.G.6.a** Treatment effectiveness, feed-rates, and operating rates for dangerous and mixed waste systems and sub-systems contained in the Pretreatment Plant (as specified in Permit Tables III.10.E.A, III.10.F.A, and III.10.G.A, as approved/modified pursuant to Permit Conditions III.10.E.9., III.10.F.5., III.10.G.10., respectively) will be as specified in Permit Sections III.10.E, III.10.F, and III.10.G, and consistent with the assumptions and basis reflected in Operating Unit Group 10, Appendix 6.3 of this Permit, as approved

pursuant to Permit Condition III.10.C.11.b. For the purposes of this permit condition, Operating Unit Group 10, Appendix 6.3 will be superseded by Appendix 6.4, upon its approval, pursuant to either Permit Condition III.10.C.11.c. or III.10.C.11.d. [WAC 173-303-680(2) and (3), and WAC 173-303-815(2)(b)(ii)].

**III.10.G.6.b** Compliance with Permit Condition III.10.G.6.a. of this Permit will be regarded as operating within the emission limits specified in Permit Table III.10.G.D., as approved pursuant to Permit Conditions III.10.C.11.b., III.10.C.11.c., or III.10.C.11.d. of this Permit.

**III.10.G.6.c** All air pollution control devices and capture systems in the Pretreatment Plant Miscellaneous Unit Systems will be maintained and operated at all times in a manner so as to minimize the emissions of air contaminants and to minimize process upsets. Procedures for ensuring that the above equipment is properly operated and maintained so as to minimize the emission of air contaminants and process upsets will be established.

**III.10.G.6.d** The Permittees will ensure that for all dangerous and/or mixed waste areas, systems, and units contained in the Pretreatment Plant (as specified in Permit Tables III.10.E.A, III.10.F.A, and III.10.G.A, as approved pursuant to Permit Conditions III.10.E.9.e.xii., III.10.F.7.d.iv., and III.10.G.10.e.ix., respectively), the Pretreatment Vessel Vent Process System specified in Permit Table III.10.G.A.i will be in operation prior to waste being introduced into these dangerous and/or mixed waste areas, systems, and units contained in the Pretreatment Building. At any time the Pretreatment Vessel Vent Process System ceases to operate or produces insufficient vacuum to recover emissions from the areas, systems, or units, the Permittees will not commence new treatment activities within the dangerous and mixed waste areas, systems, or units contained in the Pretreatment Building, and take measures to minimize evolution of emissions from on-going treatment, and will not receive new dangerous and/or mixed waste shipments into the Pretreatment Building. The Permittees will not re-commence new treatment activities until the Pretreatment Vessel Vent Process System is operational and producing sufficient vacuum to recover emissions.

### III.10.G.7 Inspections [WAC 173-303-680(3)]

**III.10.G.7.a** The Permittees will inspect the Pretreatment Plant Miscellaneous Unit Systems in accordance with the Inspection Plan in Operating Unit Group 10, Chapter 6A of this Permit, as modified in accordance with Permit Condition III.10.C.5.c.

**III.10.G.7.b** The inspection data for Pretreatment Plant Miscellaneous Unit Systems will be recorded, and the records will be placed in the WTP Unit operating record for the Pretreatment Plant Miscellaneous Unit Systems, in accordance with Permit Condition III.10.C.4.

### III.10.G.8 Recordkeeping

The Permittees will record and maintain in the WTP Unit operating record for the Pretreatment Plant Miscellaneous Unit Systems, all monitoring, calibration, maintenance, test data, and inspection data compiled under the conditions of this Permit, in accordance with Permit Conditions III.10.C.4 and III.10.C.5.

### III.10.G.9 Closure

The Permittees will close the Pretreatment Plant Miscellaneous Unit Systems in accordance with Operating Unit Group 10, Chapter 11, as approved pursuant to Permit Condition III.10.C.8.

## III.10.G.10 Compliance Schedule

**III.10.G.10.a** All information identified for submittal to Ecology in a. through e. of this compliance schedule must be signed and certified in accordance with requirements in WAC 173-303-810(12), as modified in accordance with Permit Condition III.10.G.1.d. [WAC 173-303-806(4)].

**III.10.G.10.b** The Permittees will submit to Ecology, pursuant to Permit Condition III.10.C.9.f., prior to construction of each secondary containment and leak detection system for the Pretreatment Plant Miscellaneous Unit Systems (per level) as identified in Permit Tables III.10.G.A and III.10.G.B, engineering information as specified below, for incorporation into Operating Unit Group 10, Appendices 8.2, 8.4, 8.5, 8.7, 8.8, 8.9, 8.11, and 8.12 of this Permit. At a minimum, engineering information specified below will show the following as described in WAC 173-303-640, in accordance with WAC 173-303-680 (the information specified below will include dimensioned engineering drawings and information on sumps and floor drains):

**III.10.G.10.b.i** IQRPE Reports (specific to foundation, secondary containment, and leak detection system) will include review of design drawings, calculations, and other information on which the certification report is based and will include as applicable, but not limited to, review of such information described below. Information (drawings, specifications, etc.) already included in Operating Unit Group 10, Appendix 8.0 of this Permit may be included in the report by reference and should include drawing and document numbers. IQRPE Reports will be consistent with the information separately provided in ii. through ix. below [WAC 173-303-640(3)(a), in accordance with WAC 173-303-680 and WAC 173-303-806(4)(i)(i )];

**III.10.G.10.b.ii** Design drawings (General Arrangement Drawings, in plan) and specifications for the foundation, secondary containment, including, liner installation details, and leak detection methodology [Note: leak detection systems for areas where daily, direct, or remote visual inspection is not feasible, will be continuous in accordance with WAC 173-303-640(4)(e)(iii)(C)]. These items should show the dimensions, volume calculations, and location of the secondary containment system, and should include items such as floor/pipe slopes to sumps, tanks, floor drains [WAC 173-303-640(4)(b) through (f) and WAC 173-303-640(3)(a), in accordance with WAC 173-303-680 and WAC 173-303-806(4)(i)(i)];

**III.10.G.10.b.iii** The Permittees will provide the design criteria (references to codes and standards, load definitions, and load combinations, materials of construction, and analysis/design methodology) and typical design details for the support of the secondary containment system. This information will demonstrate the foundation will be capable of providing support to the secondary containment system, resistance to pressure gradients above and below the system, and capable of preventing failure due to settlement, compression, or uplift [WAC 173-303-640(4)(c)(ii), in accordance with WAC 173-303-680(2) and WAC 173-303-806(4)(i)(i)(B)];

**III.10.G.10.b.iv** A description of materials and equipment used to provide corrosion protection for external metal components in contact with soil, including factors affecting the potential for corrosion [WAC 173-303-640(3)(a)(iii)(B), in accordance with WAC 173-303-680 and WAC 173-303-806(4)(i)(i)(A) through (B)];

**III.10.G.10.b.v** Secondary containment/foundation and leak detection systems materials selection documentation (including, but not limited to, concrete coatings and water stops, and liner materials), as applicable [WAC 173-303-806(4)(i)(i)(A) through (B)];

**III.10.G.10.b.vi** Detailed description of how the secondary containment for each miscellaneous unit system will be installed in compliance with WAC 173-303-640(3)(c), in accordance with WAC 173-303-680 and WAC 173-303-806(4)(i)(i)(A) through (B);

**III.10.G.10.b.vii** Submit Permit Table III.10.G.B. completed to provide for all secondary containment sumps and floor drains, the information as specified in each column heading, consistent with information to be provided in i. through vi. above;

**III.10.G.10.b.viii** Documentation that secondary containment and leak detection systems will not accumulate hydrogen gas levels above the lower explosive limit for incorporation into the Administrative Record [WAC 173-303-680, WAC 173-303-806(4)(i)(i)(A), and WAC 173-303-806(4)(i)(v)];

**III.10.G.10.b.ix** A detailed description of how miscellaneous unit design provides access for conducting future miscellaneous unit integrity assessments [WAC 173-303-640(3)(b) and WAC 173-303-806(4)(i)(i)(B)].

**III.10.G.10.c** The Permittees will submit to Ecology, pursuant to Permit Condition III.10.C.9.f., prior to installation of each Pretreatment Plant Miscellaneous Unit System as identified in Permit Tables III.10.G.A and III.10.G.B, engineering information as specified below, for incorporation into Operating Unit Group 10, Appendix 8.1 through 8.18 of this Permit. At a minimum, engineering information specified below will show the following as required pursuant to WAC 173-303-640 and in accordance with WAC 173-303-680 (the information specified below will include dimensioned engineering drawings):

**III.10.G.10.c.i** IQRPE Reports (specific to miscellaneous unit) will include review of design drawings, calculations, and other information on which the certification report is based and will include as applicable, but not limited to, review of such information described below. Information (drawings, specifications, etc.) already included in Operating Unit Group 10, Appendix 8.0 of this Permit may be included in the report by reference and should include drawing and document numbers. The IQRPE Reports will be consistent with the information separately provided in ii. through xi. below and the IQRPE Report specified in Permit Condition III.10.G.10.b.i. [WAC 173-303-640(3)(a), in accordance with WAC 173-303-680(2) and WAC 173-303-806(4)(i)(i)];

**III.10.G.10.c.ii** Design drawings (General Arrangement Drawings in plan , Process Flow Diagrams, Piping and Instrumentation Diagrams [including pressure control systems], and Mechanical Drawings) and specifications, and other information specific to miscellaneous units (to show location and physical attributes of each miscellaneous unit), [WAC 173-303-640(3)(a), in accordance with WAC 173-303-680(2) and WAC 173-303-806(4)(i)(i)];

**III.10.G.10.c.iii** Miscellaneous unit design criteria (references to codes and standards, load definitions, and load combinations, materials of construction, and analysis/design methodology) and typical design details for the support of the miscellaneous unit(s). Structural support calculations specific to off-specification, non-standard, and field fabricated miscellaneous units will be submitted for incorporation into the

Administrative Record [WAC 173-303-640(3)(a), in accordance with WAC 173-303-680(2) and WAC 173-303-806(4)(i)(i)(B)];

**III.10.G.10.c.iv** A description of materials and equipment used to provide corrosion protection for external metal components in contact with water, including factors affecting the potential for corrosion [WAC 173-303-640(3)(a)(iii)(B), in accordance with WAC 173-303-680(2) and WAC 173-303-806(4)(i)(i)(A) through (B)];

**III.10.G.10.c.v** Miscellaneous unit materials selection documentation (e.g., physical and chemical tolerances) [WAC 173-303-640(3)(a), in accordance with WAC 173-303-680(2) and WAC 173-303-806(4)(i)(i)(A)];

**III.10.G.10.c.vi** Miscellaneous unit vendor information (including, but not limited to, required performance warranties, as available), consistent with information submitted under ii. above, will be submitted for incorporation into the Administrative Record [WAC 173-303-640(3)(a), in accordance with WAC 173-303-680(2), WAC 173-303-806(4)(i)(i)(A) through (B), and WAC 173-303-806(4)(i)(v)];

**III.10.G.10.c.vii** System Description related to miscellaneous units will be submitted for incorporation into the Administrative Record [WAC 173-303-680, WAC 173-303-806(4)(i)(i)(A) through (B), and WAC 173-303-806(4)(i)(v)].

**III.10.G.10.c.viii** Mass and energy balance for normal projected operating conditions used in developing the Piping and Instrumentation Diagrams and the Process Flow Diagrams, including assumptions and formulas used to complete the mass and energy balance, so that they can be independently verified for incorporation into the Administrative Record [WAC 173-303-680(2), WAC 173-303-806(4)(i)(i)(B), and WAC 173-303-806(4)(i)(v)];

**III.10.G.10.c.ix** A detailed description of how the miscellaneous unit will be installed in compliance with WAC 173-303-640(3)(c), (d), and (e), in accordance with WAC 173-303-680 and WAC 173-303-806(4)(i)(i)(B);

**III.10.G.10.c.x** Documentation that miscellaneous units are designed to prevent the accumulation of hydrogen gas levels above the lower explosive limit for incorporation into the Administrative Record [WAC 173-303-680, WAC 173-303-806(4)(i)(i)(A), and WAC 173-303-806(4)(i)(v)];

**III.10.G.10.c.xi** Documentation that miscellaneous units are designed to prevent escape of vapors and emissions of acutely or chronically toxic (upon inhalation) Extremely Hazardous Waste, for incorporation into the Administrative Record [WAC 173-303-640(5)(e), in accordance with WAC 173-303-680(2) and WAC 173-303-806(4)(i)(i)(B)];

**III.10.G.10.d** The Permittees will submit to Ecology, pursuant to Permit Condition III.10.C.9.f., prior to installation of equipment as identified in Permit Tables III.10.G.A and III.10.G.B, not addressed in Permit Condition III.10.G.10.c., engineering information as specified below for incorporation into Operating Unit Group 10, Appendices 8.1through 8.14 of this Permit. At a minimum, engineering information specified below will show the following as required pursuant to WAC 173-303-640, in accordance with WAC 173-303-680 (the information specified below will include dimensioned engineering drawings):

**III.10.G.10.d.i** IQRPE Reports (specific to equipment) will include a review of design drawings, calculations, and other information as applicable, on which the certification report is based. The reports will include, but not be limited to, review of such information described below. Information (drawings, specifications, etc.) already included in

Operating Unit Group 10, Appendix 8.0 of this Permit may be included in the report by reference and should include drawing and document numbers. The IQRPE Reports will be consistent with the information provided separately in ii. through xiii. below and the IQRPE Reports specified in Permit Conditions III.10.G.10.b. and III.10.G.10.c., [WAC 173-303-640(3)(a), in accordance with WAC 173-303-680(2) and WAC 173-303-806(4)(i)(i)(A) through (B)];

**III.10.G.10.d.ii** Design drawings (Process Flow Diagrams, Piping and Instrumentation Diagrams [including pressure control systems]) specifications and other information specific to equipment (these drawings should include all equipment such as pipe, valves, fittings, pumps, instruments, etc.) [WAC 173-303-640(3)(a), in accordance with WAC 173-303-680(2) and WAC 173-303-806(4)(i)(i)(A) through (B)];

**III.10.G.10.d.iii** The Permittees will provide the design criteria (references to codes and standards, load definitions, and load combinations, materials of construction, and analysis/design methodology) and typical design details for the support of the equipment [WAC 173-303-640(3)(a) and WAC 173-303-640(3)(f), in accordance with WAC 173-303-680 and WAC 173-303-806(4)(i)(i)(B)];

**III.10.G.10.d.iv** A description of materials and equipment used to provide corrosion protection for external metal components in contact with soil and water, including factors affecting the potential for corrosion [WAC 173-303-640(3)(a)(iii)(B), in accordance with WAC 173-303-680(2) and WAC 173-303-806(4)(i)(i)(A)];

**III.10.G.10.d.v** Materials selection documentation for equipment (e.g., physical and chemical tolerances) [WAC 173-303-640(3)(a), in accordance with WAC 173-303-680(2) and WAC 173-303-806(4)(i)(i)(A)];

**III.10.G.10.d.vi** Vendor information (including, but not limited to, required performance warranties, as available), consistent with information submitted under ii. above, for equipment will be submitted for incorporation into the Administrative Record [WAC 173-303-640(3)(a), in accordance with WAC 173-303-680(2), WAC 173-303-806(4)(i)(i)(A) through (B), and WAC 173-303-806(4)(i)(iv)];

**III.10.G.10.d.vii** Miscellaneous unit, equipment, and leak detection system instrument control logic narrative description (e.g., descriptions of fail-safe conditions, etc.) [WAC 173-303-680(2), WAC 173-303-806(4)(i)(i)(B), and WAC 173-303-806(4)(i)(v)].

**III.10.G.10.d.viii** System Descriptions related to equipment and system descriptions related to leak detection systems, for incorporation into the Administrative Record [WAC 173-303-680, WAC 173-303-806(4)(i)(i)(A) through (B), and WAC 173-303-806(4)(i)(v)];

**III.10.G.10.d.ix** A detailed description of how the equipment will be installed and tested [WAC 173-303-640(3)(c) through (e) and WAC 173-303-640(4)(b) and (c), in accordance with WAC 173-303-680 and WAC 173-303-806(4)(i)(i)(B)];

**III.10.G.10.d.x** For process monitoring, control, and leak detection system instrumentation for the WTP Unit Miscellaneous Unit Systems as identified in Permit Table III.10.G.C, a detailed description of how the process monitoring, control, and leak detection system instrumentation will be installed and tested [WAC 173-303-640(3)(c) through

(e), WAC 173-303-640(4)(b) and (c), WAC 173-303-806(4)(c)(vi), and WAC 173-303-806(4)(i)(i)(B)];

**III.10.G.10.d.xi** Mass and energy balance for projected normal operating conditions, used in developing the Piping and Instrumentation Diagrams and Process Flow Diagrams, including assumptions and formulas used to complete the mass and energy balance, so that they can be independently verified, for incorporation into the Administrative Record [WAC 173-303-680(2), WAC 173-303-806(4)(i)(i)(B), and WAC 173-303-806(4)(i)(v)];

**III.10.G.10.d.xii** Documentation that miscellaneous units are designed to prevent the accumulation of hydrogen gas levels above the lower explosive limit for incorporation into the Administrative Record [WAC 173-303-680, WAC 173-303-806(4)(i)(i)(A), and WAC 173-303-806(4)(i)(v)].

**III.10.G.10.d.xiii** Leak detection system documentation (e.g. vendor information, etc.) consistent with information submitted under Permit Condition III.10.G.10.c.ii. and Permit Conditions III.10.G.10.d.ii., vii., viii., and x. above, will be submitted for incorporation into the Administrative Record.

**III.10.G.10.e** Prior to initial receipt of dangerous and/or mixed waste in the WTP Unit, the Permittees will submit to Ecology, pursuant to Permit Condition III.10.C.9.f., the following as specified below for incorporation into Operating Unit Group 10, Appendix 8.18, except Permit Condition III.10.G.10.e.i., which will be incorporated into Operating Unit Group 10, Chapter 6, of this Permit. All information provided under this permit condition must be consistent with information provided pursuant to Permit Conditions III.10.G.10.b., c., d., and e., III.10.C.3.e., and III.10.C.11.b., as approved by Ecology.

**III.10.G.10.e.i** Integrity assessment program and schedule for the Pretreatment Plant Miscellaneous Unit Systems will address the conducting of periodic integrity assessments on the Pretreatment Plant Miscellaneous Unit Systems over the life of the systems, as specified in Permit Condition III.10.G.10.b.ix. and WAC 173-303-640(3)(b), in accordance with WAC 173-303-680, and descriptions of procedures for addressing problems detected during integrity assessments. The schedule must be based on past integrity assessments, age of the system, materials of construction, characteristics of the waste, and any other relevant factors [WAC 173-303-640(3)(b), in accordance with WAC 173-303-680 and WAC 173-303-806(4)(i)(i)(B)];

**III.10.G.10.e.ii** Detailed plans and descriptions, demonstrating the leak detection system is operated so that it will detect the failure of either the primary or secondary containment structure or the presence of any release of dangerous and/or mixed waste or accumulated liquid in the secondary containment system within twenty-four (24) hours WAC 173-303-640(4)(c)(iii). Detection of a leak of at least 0.1 gallons per hour within twenty-four (24) hours is defined as being able to detect a leak within twenty-four (24) hours. Any exceptions to this criteria must be approved by Ecology in accordance with WAC 173-303-680, WAC 173-303-640(4)(c)(iii), and WAC 173-303-806(4)(i)(i)(B)];

**III.10.G.10.e.iii** Detailed operational plans and descriptions, demonstrating that spilled or leaked waste and accumulated liquids can be removed from the secondary containment system within twenty-four (24) hours [WAC 173-303-806(4)(i)(i)(B)];

**III.10.G.10.e.iv** Descriptions of operational procedures demonstrating appropriate controls and practices are in place to prevent spills and overflows from the Pretreatment Plant Miscellaneous Unit Systems, or containment systems, in compliance with

WAC 173-303-640(5)(b)(i) through (iii), in accordance with WAC 173-303-680 [WAC 173-303-806(4)(i)(i)(B)];

**III.10.G.10.e.v** Description of procedures for investigation and repair of the Pretreatment Plant Miscellaneous Unit Systems [WAC 173-303–640(6) and WAC 173-303-640(7)(e) and (f), in accordance with WAC 173-303-680, WAC 173-303-320, WAC 173-303-806(4)(a)(v), and WAC 173-303-806(4)(i)(i)(B)];

**III.10.G.10.e.vi** Updated Chapter 4, Narrative Descriptions, Tables and Figures as identified in Permit Tables III.10.G.A and III.10.G.B., as modified pursuant to Permit Condition III.10.G.10.e.ix., and updated to identify routinely non-accessible Pretreatment Plant Miscellaneous Unit Systems [WAC 173-303-680 and WAC 173-303-806(4)(i)(i)(A) through (B)];

**III.10.G.10.e.vii** Descriptions of procedures for management of ignitable and reactive, and incompatible dangerous and/or mixed waste, in accordance with WAC 173-303-640(9) and (10), in accordance with WAC 173-303-680 and WAC 173-303-806(4)(i)(i)(B).

**III.10.G.10.e.viii** A description of the tracking system used to track dangerous and/or mixed waste generated throughout the Pretreatment Plant Miscellaneous Unit Systems, pursuant to WAC 173-303-380.

**III.10.G.10.e.ix** Permit Table III.10.G.A, amended as follows [WAC 173-303-680 and WAC 173-303-806(4)(i)(i)(A) through (B)]:

A. Under column 1, update and complete list of dangerous and mixed waste Pretreatment Plant Miscellaneous Unit Systems, including plant items which comprise each system (listed by item number).

B. Under column 2, update and complete system designations.

C. Under column 3, replace the ‘Reserved’ with the Operating Unit Group 10, Appendix 8.0 subsections specific to miscellaneous unit systems as listed in column 1.

D. Under column 4, update and complete list of narrative description tables and figures.

E. Under column 5, update and complete maximum operating volume for each miscellaneous unit, as applicable.

F. Permit Table III.10.G.A.i., amended as follows:

1. Under column 1, update and complete list of plant items that comprise the Pretreatment Plant Vessel Vent System (listed by item number).
2. Under column 2, update and complete designations.
3. Under column 3, replace the ‘Reserved’ with the Operating Unit Group 10, Appendix 8.0, subsections (e.g., 9.1, 9.2, etc.) specific to systems as listed in column 1.
4. Under column 4, update and complete list of narrative description tables and figures.

**III.10.G.10.e.x** Permit Table III.10.G.C. will be completed for Pretreatment Plant Miscellaneous Unit System process and leak detection system monitors and instruments (to include, but not be limited to: instruments and monitors measuring and/or controlling flow, pressure, temperature, density, pH, level, humidity, and emissions) to provide the information as specified in each column heading. Process and leak detection system

monitors and instruments for critical systems as specified in Operating Unit Group 10, Appendix 2.0 and as updated pursuant to Permit Condition III.10.C.9.b.and for operating parameters as required to comply with Permit Condition III.10.C.3.e.iii. will be addressed. Process monitors and instruments for non-waste management operations (e.g., utilities, raw chemical storage, non-contact cooling waters, etc.) are excluded from this permit condition [WAC 173-303-680, WAC 173-303-806(4)(i)(i)(A) through (B), and WAC 173-303-806(4)(i)(v)];

**III.10.G.10.e.xi** Supporting documentation for operating trips and expected operating range as specified in Permit Table III.10.G.C., as approved pursuant to Permit Condition III.10.G.10.e.x. [WAC 173-303-680, WAC 173-303-806(4)(i)(i)(B), WAC 173-303-806(4)(i)(iv), and WAC 173-303-806(4)(i)(v)];

**III.10.G.10.e.xii** Documentation of process and leak detection instruments and monitors (as listed in Permit Table III.10.G.C.) for the Pretreatment Plant Miscellaneous Unit Systems to include, but not be limited to, the following [WAC 173-303-680, WAC 173-303-806(4)(i)(i)(B), and WAC 173-303-806(4)(i)(v)]:

A. Procurement Specifications.

B. Location used.

C. Range, precision, and accuracy.

D. Detailed descriptions of calibration/functionality test procedures (e.g., method number [ASTM]) or provide a copy of manufacturer's recommended calibration procedures.

E. Calibration/functionality test, inspection, and routine maintenance schedules and checklists, including justification for calibration, inspection and maintenance frequencies, criteria for identifying instruments found to be significantly out of calibration, and corrective action to be taken for instruments found to be significantly out of calibration (e.g., increasing frequency of calibration, instrument replacement, etc.).

F. Equipment instrument control logic narrative description (e.g., descriptions of fail-safe conditions, etc.) [WAC 173-303-680(2), WAC 173-303-806(4)(i)(i)(B), and WAC 173-303-806(4)(i)(v)].

This page intentionally left blank.

**Table III.10.G.A – Pretreatment Plant Miscellaneous Unit Systems**

| Miscellaneous Unit System Description[a] | Miscellaneous Unit System Designation | Description Drawings | Narrative Description, Tables, & Figures | Maximum Capacity (gallons) |
|---|---|---|---|---|
| **Waste Feed Evaporation Process System**<br><br>FEP-SEP-00001A (Waste Feed Evaporator Separator Vessel)<br><br>FEP-SEP-00001B (Waste Feed Evaporator Separator Vessel) | FEP | **24590-PTF**<br>-3PS-MEVV-T0001, Rev 3<br>-M5-V17T-00004001, Rev 3<br>-M5-V17T-00004002, Rev 3<br>-M6-FEP-00001001, Rev 1<br>-M6-FEP-00001002, Rev 0<br>-M6-FEP-00001003, Rev 0<br>-M6-FEP-00002001, Rev 0<br>-M6-FEP-00002002, Rev 1<br>-M6-FEP-00002003, Rev 0<br>-M6-FEP-00003001, Rev 0<br>-M6-FEP-00003002, Rev 0<br>-M6-FEP-00004001, Rev 0<br>-M6-FEP-00004002, Rev 1<br>-M6-FEP-00004003, Rev 0<br>-M6-FEP-00005001, Rev 0<br>-MVD-FEP-P0001, Rev 2<br>-MVD-FEP-P0002, Rev 2<br>-MVD-FEP-00003, Rev 1<br>-MVD-FEP-00006, Rev 5<br>-MVD-FEP-00007, Rev 5<br>-MV-FEP-P0001, Rev 0<br>-MV-FEP-P0002, Rev 0<br>-N1D-FEP-00002, Rev 6 | Section 4D.2.2.; Table 4D-2; and Figures 4A-1, 4A-2 and 4A-2A of Operating Unit Group 10, Chapter 4 of this Permit. | FEP-SEP-00001A = 14,512<br><br>FEP-SEP-00001B = 14, 512 |

**Table III.10.G.A – Pretreatment Plant Miscellaneous Unit Systems**

| Miscellaneous Unit System Description[a] | Miscellaneous Unit System Designation | Description Drawings | Narrative Description, Tables, & Figures | Maximum Capacity (gallons) |
|---|---|---|---|---|
| | | -N1D-FEP-P0003, Rev 1<br>-P1-P01T-00001, Rev 8<br>-P1-P01T-00002, Rev 7 | | |
| **Waste Feed Evaporation Process System (Cont.)**<br><br>FEP-COND-00001A (Waste Evaporator Primary Condenser)<br><br>FEP-COND-00001B (Waste Evaporator Primary Condenser)<br><br>FEP-COND-00002A (Waste Evaporator Intercondenser)<br><br>FEP-COND-00002B (Waste Evaporator Intercondenser)<br><br>FEP-COND-00003A (Waste Evaporator Aftercondenser)<br><br>FEP-COND-00003B (Waste Evaporator Aftercondenser) | FEP | **24590-PTF**<br>-3PS-MEVV- T0001, Rev 3<br>-M5-V17T-00004001, Rev 3<br>-M5-V17T-00004002, Rev 3<br>-M6-FEP-00003002, Rev 0<br>-M6-FEP-00005001, Rev 0<br>-MED-FEP-P0003, Rev 0<br>-MED-FEP-P0004, Rev 0<br>-MED-FEP-P0005, Rev 0<br>-MED-FEP-P0006, Rev 0<br>-MED-FEP-P0007, Rev 0<br>-MED-FEP-P0008, Rev 0<br>-N1D-FEP-P0008, Rev 0<br>-N1D-FEP-00009, Rev 3<br>-N1D-FEP-00010, Rev 3<br>-P1-P01T-00001, Rev 8<br>-P1-P01T-00002, Rev 7 | Section 4D.2.2.; Table 4D-2; and Figures 4A-1, 4A-2 and 4A-2A of Operating Unit Group 10, Chapter 4 of this Permit. | N/A |
| **Waste Feed Evaporation Process System (Cont.)**<br><br>FEP-RBLR-00001A (Waste Feed Evaporator Reboiler) | FEP | **24590-PTF**<br>-3PS-MEVV-T0001, Rev 3<br>-M5-V17T-00004001, Rev 3<br>-M5-V17T-00004002, Rev 3 | Section 4D.2.2.; Table 4D-2; and Figures 4A-1, 4A-2 and 4A-2A of Operating Unit | N/A |

**Table III.10.G.A – Pretreatment Plant Miscellaneous Unit Systems**

| Miscellaneous Unit System Description[a] | Miscellaneous Unit System Designation | Description Drawings | Narrative Description, Tables, & Figures | Maximum Capacity (gallons) |
|---|---|---|---|---|
| FEP-RBLR-00001B (Waste Feed Evaporator Reboiler) | | -MED-FEP-00010, Rev 4<br>-N1D-FEP-P0008, Rev 0<br>-P1-P01T-00001, Rev 8<br>-P1-P01T-00002, Rev 7 | Group 10, Chapter 4 of this Permit. | |
| **Cesium Nitric Acid Recovery Process System**<br><br>CNP-EVAP-00001 (Cesium Evaporator Separator Vessel) | CNP | **24590-PTF**<br>-3PS-MEVV-T0002, Rev 4<br>-M5-V17T-00014, Rev 2<br>-M6-CNP-00001001, Rev 0<br>-M6-CNP-00001002, Rev. 0<br>-M6-CNP-00001003, Rev. 0<br>-M6-CNP-00002001, Rev 0<br>-M6-CNP-00002002, Rev 0<br>-M6-CNP-00002003, Rev 0<br>-M6-CNP-00008001, Rev 0<br>-M6-CNP-00008002, Rev 0<br>-M6-CNP-00010001, Rev 0<br>-M6-CNP-00010002, Rev 0<br>-MV-CNP-P0001, Rev 0<br>-MV-CNP-P0002, Rev 1<br>-MV-CNP-P0005, Rev 0<br>-MVD-CNP-P0003, Rev 1<br>-MVD-CNP-P0010, Rev 0<br>-MVD-CNP-00006, Rev 6<br>-N1D-CNP-P0005, Rev 1 | Section 4D.2.6.; Table 4D-2; and Figures 4A-1, 4A-2 and 4A-2A of Operating Unit Group 10, Chapter 4 of this Permit. | CNP-EVAP-00001 = RESERVED |

**Table III.10.G.A – Pretreatment Plant Miscellaneous Unit Systems**

| Miscellaneous Unit System Description[a] | Miscellaneous Unit System Designation | Description Drawings | Narrative Description, Tables, & Figures | Maximum Capacity (gallons) |
|---|---|---|---|---|
| | | -N1D-CNP-P0006, Rev 3<br>-N1D-CNP-P0009, Rev 1<br>-N1D-CNP-P0011, Rev 1<br>-P1-P01T-00001, Rev 8<br>-P1-P01T-00002, Rev 7<br>-P1-P01T-00003, Rev 4<br>-P1-P01T-00004, Rev 6 | | |
| **Cesium Nitric Acid Recovery Process System (Cont.)**<br><br>CNP-HX-00001 (Cesium Evaporator Concentrate Reboiler | CNP | **24590-PTF**<br>-3PS-MEVV-T0002, Rev 4<br>-M5-V17T-P0014, Rev 2<br>-M6-CNP-00001001, Rev 0<br>-M6-CNP-00001002, Rev 0<br>-M6-CNP-00001003, Rev 0<br>-M6-CNP-00002001, Rev 0<br>-M6-CNP-00002002, Rev 0<br>-M6-CNP-00002003, Rev 0<br>-M6-CNP-00008, Rev 2<br>-MED-CNP-00003, Rev 4<br>-MED-CNP-00004, Rev 5<br>-MED-CNP-00010, Rev 3<br>-P1-P01T-00001, Rev 8<br>-P1-P01T-00002, Rev 7<br>-P1-P01T-00003, Rev 4<br>-P1-P01T-00004, Rev 6 | Section 4D.2.6.; Table 4D-2; and Figures 4A-1, 4A-2 and 4A-2A of Operating Unit Group 10, Chapter 4 of this Permit. | N/A |

**Table III.10.G.A – Pretreatment Plant Miscellaneous Unit Systems**

| Miscellaneous Unit System Description[a] | Miscellaneous Unit System Designation | Description Drawings | Narrative Description, Tables, & Figures | Maximum Capacity (gallons) |
|---|---|---|---|---|
| **Cesium Nitric Acid Recovery Process System (Cont.)**<br><br>CNP-DISTC-00001 (Cesium Evaporator Nitric Acid Rectifier Column) | CNP | **24590-PTF**<br>-M5-V17T-00014, Rev 2<br>-M6-CNP-00010001, Rev 0<br>-N1D-CNP-00001, Rev 1<br>-P1-P01T-00003, Rev 4<br>-3PS-MEVV-T0002, Rev 4 | Section 4D.2.6.; Table 4D-2; and Figures 4A-1, 4A-2 and 4A-2A of Operating Unit Group 10, Chapter 4 of this Permit. | RESERVED |
| **Cesium Nitric Acid Recovery Process System (Cont.)**<br><br>CNP-HX-00002 (Cesium Evaporator Primary Condenser)<br><br>CNP-HX-00003 (Cesium Evaporator Inter-Condenser)<br><br>CNP-HX-00004 (Cesium Evaporator After-Condenser) | CNP | **24590-PTF**<br>-M5-V17T-00014, Rev 2<br>-M6-CNP-00001001, Rev 0<br>-M6-CNP-00001002, Rev 0<br>-M6-CNP-00001003, Rev 0<br>-M6-CNP-00002001, Rev 0<br>-M6-CNP-00002002, Rev 0<br>-M6-CNP-00002003, Rev 0<br>-M6-CNP-00008001, Rev 0<br>-M6-CNP-00010001, Rev 0<br>-MED-CNP-00003, Rev 4<br>-MED-CNP-00004, Rev 5<br>-MED-CNP-00005, Rev 4<br>-MED-CNP-00010, Rev 3<br>-N1D-CNP-P0002, Rev 1<br>-N1D-CNP-P0003, Rev 1<br>-N1D-CNP-P0012, Rev 1 | Section 4D.2.6; Table 4D-2; and Figures 4A-1, 4A-2 and 4A-2A of Operating Unit Group 10, Chapter 4 of this Permit. | N/A<br><br>N/A<br><br>N/A |

**Table III.10.G.A – Pretreatment Plant Miscellaneous Unit Systems**

| Miscellaneous Unit System Description[a] | Miscellaneous Unit System Designation | Description Drawings | Narrative Description, Tables, & Figures | Maximum Capacity (gallons) |
|---|---|---|---|---|
| | | -P1-P01T-00001, Rev 8<br>-P1-P01T-00002, Rev 7<br>-P1-P01T-00003, Rev 4<br>-P1-P01T-00004, Rev 6<br>-3PS-MEVV-T0002, Rev 4 | | |
| **Treated LAW Evaporation Process System**<br><br>TLP-SEP-00001 (Treated LAW Evaporator Separator Vessel) | TLP | **24590-PTF**<br>-3PS-MEVV- T0001, Rev 3<br>-M5-V17T-00005, Rev 2<br>-M6-TLP-00001, Rev 3<br>-M6-TLP-00002001, Rev 0<br>-M6-TLP-00002002, Rev 0<br>-M6-TLP-00002003, Rev 0<br>-M6-TLP-00002004, Rev 0<br>-M6-TLP-00003001, Rev 0<br>-M6-TLP-00003002, Rev 0<br>-M6-TLP-00003003, Rev 0<br>-M6-TLP-00003004, Rev 0<br>-M6-TLP-00005001, Rev 0<br>-M6-TLP-00005002, Rev 0<br>-M6-TLP-00005003, Rev 0<br>-M6-TLP-00005004, Rev 0<br>-M6-TLP-00005005, Rev 0<br>-M6-TLP-00006001, Rev 0<br>-M6-TLP-00006002, Rev 0 | Section 4D.2.11; Table 4D-2; and Figures 4A-1, 4A-2 and 4A-2A of Operating Unit Group 10, Chapter 4 of this Permit. | TLP-SEP-00001 = 13,359 |

**Table III.10.G.A – Pretreatment Plant Miscellaneous Unit Systems**

| Miscellaneous Unit System Description[a] | Miscellaneous Unit System Designation | Description Drawings | Narrative Description, Tables, & Figures | Maximum Capacity (gallons) |
|---|---|---|---|---|
| | | -M6-TLP-00006003, Rev 0<br>-M6-TLP-00006004, Rev 0<br>-M6-TLP-00006005, Rev 0<br>-MVD-TLP-P0001, Rev 2<br>-MVD-TLP-P0002, Rev 2<br>-MVD-TLP-00004, Rev 1<br>-MVD-TLP-00005, Rev 7<br>-MV-TLP-P0001, Rev 1<br>-MV-TLP-P0002, Rev 1<br>-N1D-TLP-P0001, Rev 2<br>-N1D-TLP-P0005, Rev 3<br>-N1D-TLP-P0006, Rev 1<br>-P1-P01T-00001, Rev 8<br>-P1-P01T-00002, Rev 7<br>-P1-P01T-00003, Rev 4 | | |
| **Treated LAW Evaporation Process System (Cont.)**<br><br>TLP-COND-00001 (Treated LAW Primary Condenser)<br><br>TLP-COND-00002 (Treated LAW Inter-condenser)<br><br>TLP-COND-00003 (Treated LAW After-condenser) | TLP | **24590-PTF**<br>-3PS-MEVV- T0001, Rev 3<br>-M5-V17T-00005, Rev 2<br>-M6-TLP-00002001, Rev 0<br>-M6-TLP-00002002, Rev 0<br>-M6-TLP-00002003, Rev 0<br>-M6-TLP-00002004, Rev 0<br>-M6-TLP-00003001, Rev 0<br>-M6-TLP-00003002, Rev 0 | Section 4D.2.11; Table 4D-2; and Figures 4A-1, 4A-2 and 4A-2A of Operating Unit Group 10, Chapter 4 of this Permit. | N/A |

**Table III.10.G.A – Pretreatment Plant Miscellaneous Unit Systems**

| Miscellaneous Unit System Description[a] | Miscellaneous Unit System Designation | Description Drawings | Narrative Description, Tables, & Figures | Maximum Capacity (gallons) |
|---|---|---|---|---|
| | | -M6-TLP-00003003, Rev 0<br>-M6-TLP-00003004, Rev 0<br>-M6-TLP-00005001, Rev 0<br>-M6-TLP-00005002, Rev 0<br>-M6-TLP-00005003, Rev 0<br>-M6-TLP-00005004, Rev 0<br>-M6-TLP-00005005, Rev 0<br>-M6-TLP-00006001, Rev 0<br>-M6-TLP-00006002, Rev 0<br>-M6-TLP-00006003, Rev 0<br>-M6-TLP-00006004, Rev 0<br>-M6-TLP-00006005, Rev 0<br>-MED-TLP-P0001, Rev 0<br>-MED-TLP-00002, Rev 4<br>-MED-TLP-00003, Rev 4<br>-MV-TLP-P0001, Rev 1<br>-MV-TLP-P0002, Rev 1<br>-N1D-TLP-P0002, Rev 0<br>-N1D-TLP-P0003, Rev 4<br>-P1-P01T-00001, Rev 8<br>-P1-P01T-00002, Rev 7<br>-P1-P01T-00003, Rev 4 | | |
| **Treated LAW Evaporation Process System (Cont.)** | TLP | **24590-PTF**<br>-3PS-MEVV- T0001, Rev 3 | Section 4D.2.11; Table 4D-2; and Figures 4A-1, | N/A |

**Table III.10.G.A – Pretreatment Plant Miscellaneous Unit Systems**

| Miscellaneous Unit System Description[a] | Miscellaneous Unit System Designation | Description Drawings | Narrative Description, Tables, & Figures | Maximum Capacity (gallons) |
|---|---|---|---|---|
| TLP-RBLR-00001 (Treated LAW Evaporator Reboiler) | | -M5-V17T-00005, Rev 2<br>-MV-TLP-P0001, Rev 1<br>-MV-TLP-P0002, Rev 1<br>-N1D-TLP-P0011, Rev 1<br>-P1-P01T-00001, Rev 8<br>-P1-P01T-00002, Rev 7<br>-P1-P01T-00003, Rev 4 | 4A-2 and 4A-2A of Operating Unit Group 10, Chapter 4 of this Permit. | |
| **Spray Decontamination and Sizing System**<br><br>PIH-TTBL-00001 (Spray Decontamination Turntable)<br>PIH-TTBL-00002 (Remote Repair Turntable<br>PIH-BENCH-00003 (Size Reduction Table)<br><br>This miscellaneous unit is exempt from the requirements of WAC-173-303-640. | PIH | RESERVED | Section 4D.3.2.1; Table 4D-2; and Figure 4A-128 of Operating Unit 10, Chapter 4 of this Permit. | N/A |
| **Hotcell Waste Management Unit**<br><br>Hotcell Floor<br><br>This miscellaneous unit is exempt from the requirements of WAC-173-303-640. | NA | RESERVED | Section 4D.3.1; Table 4D-2; and Figure 4A-128 of Operating Unit 10, Chapter 4 of this Permit. | RESERVED |

[a] The Pretreatment Vessel Vent Process (PVP), Process Vessel Vent Systems (PVV), Pulse Jet Mixer Exhaust System (PJV), and Pretreatment Treated LAW Evaporator Separator Vessel System (TLP) specified in Permit Table III.10.G.A.i is shared between the Pretreatment Plant Miscellaneous Unit Systems. Any references in this Permit to the individual Pretreatment Plant Miscellaneous Unit Systems are also a reference to the Pretreatment Vessel Vent Process (PVP), Process Vessel Vent Systems (PVV), Pulse Jet Mixer Exhaust System (PJV), and Pretreatment Treated LAW Evaporator Separator Vessel System (TLP) Systems. Any reference in this Permit to Permit Table III.10.G.A is also a reference to Permit Table III.10.G.A.i.

**Table III.10.G.A.i – Pretreatment Plant Vessel Vent Systems Associated with Pretreatment Plant Miscellaneous Unit Systems**

| Description | Designation | Description Drawings | Narrative Description, Tables & Figures |
|---|---|---|---|
| **Pretreatment Vessel Vent Process System**<br><br>PVP-SCB-00002 (Vessel Vent Caustic Scrubber) | PVP | **24590-PTF**<br>-M5-V17T-00021001, Rev 2<br>-M5-V17T-00021004, Rev 2<br>-M6-PVP-00002, Rev 3<br>-M6-PVP-00017001, Rev 0<br>-M6-PVP-00017002, Rev 0<br>-M6-PVP-00017003, Rev 0<br>-M6-PWD-00044, Rev 3<br>-MKD-PVP-00002, Rev 11<br>-MVD-PVP-P0001, Rev 0<br>-MV-PVP-P0002, Rev 0<br>-N1D-PVP-P0001, Rev 1<br>-P1-P01T-00003, Rev 4<br>-P1-P01T-00004, Rev 6 | Section 4D.4.2; Table 4F-2, 4D-2; and Figures 4A-1, 4A-2 and 4A-2A of Operating Unit Group 10, Chapter 4 of this Permit. |
| **Pretreatment Vessel Vent Process System (Cont.)**<br><br>PVP-HEME-00001A (Vessel Vent HEME, Mist eliminator)<br><br>PVP-HEME-00001B (Vessel Vent HEME, Mist Eliminator)<br><br>PVP-HEME-00001C (Vessel Vent HEME, Mist Eliminator) | PVP | **24590-PTF**<br>-M5-V17T-00021001, Rev 2<br>-M5-V17T-00021004, Rev 2<br>-P1-P01T-00001, Rev 8<br>-P1-P01T-00002, Rev 7<br>-P1-P01T-00003, Rev 4<br>-P1-P01T-00004, Rev 6 | Section 4D.4.2; Table 4F-2, 4D-2; and Figures 4A-1, 4A-2 and 4A-2A of Operating Unit Group 10, Chapter 4 of this Permit. |

**Table III.10.G.A.i – Pretreatment Plant Vessel Vent Systems Associated with Pretreatment Plant Miscellaneous Unit Systems**

| Description | Designation | Description Drawings | Narrative Description, Tables & Figures |
|---|---|---|---|
| **Pretreatment Vessel Vent Process System (Cont.)**<br><br>PVP-HX-00002 (Vessel Vent Scrubbing Liquid Cooler) | PVP | **24590-PTF**<br>-M5-V17T-00021001, Rev 2<br>-M6-PVP-00017001, Rev 0<br>-M6-PVP-00017002, Rev 0<br>-M6-PVP-00017003, Rev 0<br>-P1-P01T-00002, Rev 7<br>-P1-P01T-00003, Rev 4<br>-P1-P01T-00004, Rev 6 | Section 4D.4.2; Table 4F-2, 4D-2; and Figures 4A-1, 4A-2 and 4A-2A of Operating Unit Group 10, Chapter 4 of this Permit. |
| **Pretreatment Vessel Vent Process System (Cont.)**<br><br>PVP-OXID-00001 (Vessel Vent VOC Oxidizer Unit) | PVP | **24590-PTF**<br>-M5-V17T-00021001, Rev 2<br>-M5-V17T-00021004, Rev 2<br>-M6-PVP-00017001, Rev 0<br>-M6-PVP-00017002, Rev 0<br>-M6-PVP-00017003, Rev 0<br>-M6-PVP-000018001, Rev 1<br>-M6-PVP-000018002, Rev 0<br>-N1D-PVP-P0002, Rev 1<br>-P1-P01T-00001, Rev 8<br>-P1-P01T-00002, Rev 7<br>-P1-P01T-00003, Rev 4<br>-P1-P01T-00004, Rev 6 | Section 4D.4.2; Table 4F-2, 4D-2; and Figures 4A-1, 4A-2 and 4A-2A of Operating Unit Group 10, Chapter 4 of this Permit. |
| **Pretreatment Vessel Vent Process System (Cont.)**<br><br>PVP-CLR-00001 (Vessel Vent Aftercooler) | PVP | **24590-PTF**<br>-M5-V17T-00021001, Rev 2<br>-M5-V17T-00021004, Rev 2<br>-P1-P01T-00001, Rev 8 | Section 4D.4.2; Table 4F-2, 4D-2; and Figures 4A-1, 4A-2 and 4A-2A of Operating Unit Group 10, Chapter 4 of this Permit. |

**Table III.10.G.A.i – Pretreatment Plant Vessel Vent Systems Associated with Pretreatment Plant Miscellaneous Unit Systems**

| Description | Designation | Description Drawings | Narrative Description, Tables & Figures |
|---|---|---|---|
| | | -P1-P01T-00002, Rev 7<br>-P1-P01T-00003, Rev 4<br>-P1-P01T-00004, Rev 6 | |
| **Pretreatment Vessel Vent Process System (Cont.)**<br><br>PVP-ADBR-00001A (Vessel Vent Carbon Bed Absorber)<br><br>PVP-ADBR-00001B (Vessel Vent Carbon Bed Absorber) | PVP | **24590-PTF**<br>-M5-V17T-00021001, Rev 2<br>-M5-V17T-00021004, Rev 2<br>-P1-P01T-00001, Rev 8<br>-P1-P01T-00002, Rev 7<br>-P1-P01T-00003, Rev 4<br>-P1-P01T-00004, Rev 6 | Section 4D.4.2; Table 4F-2, 4D-2; and Figures 4A-1, 4A-2 and 4A-2A of Operating Unit Group 10, Chapter 4 of this Permit. |
| **Pretreatment Vessel Vent Process System (Cont.)**<br><br>PVP-FILT-00001 (Vessel Vent Adsorber Outlet Filter) | PVP | **24590-PTF**<br>-M5-V17T-00021001, Rev 2<br>-M5-V17T-00021004, Rev 2<br>-P1-P01T-00002, Rev 7<br>-P1-P01T-00003, Rev 4<br>-P1-P01T-00004, Rev 6 | Section 4D.4.2; Table 4F-2, 4D-2; and Figures 4A-1, 4A-2 and 4A-2A of Operating Unit Group 10, Chapter 4 of this Permit. |
| **Process Vessel Vent System**<br><br>PVV-HEPA-00001A (Vessel Vent Primary HEPA Filter)<br><br>PVV-HEPA-00001B (Vessel Vent Primary HEPA Filter) | PVV | **24590-PTF**<br>-M5-V17T-00021001, Rev 2<br>-P1-P01T-00002, Rev 7 | Section 4D.4.2; Table 4F-2, 4D-2; and Figures 4A-1, 4A-2 and 4A-2A of Operating Unit Group 10, Chapter 4 of this Permit. |

**Table III.10.G.A.i – Pretreatment Plant Vessel Vent Systems Associated with Pretreatment Plant Miscellaneous Unit Systems**

| Description | Designation | Description Drawings | Narrative Description, Tables & Figures |
|---|---|---|---|
| PVV-HEPA-00002A (Vessel Vent Secondary HEPA Filter)<br><br>PVV-HEPA-00002B (Vessel Vent Secondary HEPA Filter) | | | |
| **Process Vessel Vent System (Cont.)**<br><br>PVV-FAN-00001A (Vessel Vent Exhaust Fan)<br><br>PVV-FAN-00001B (Vessel Vent Exhaust Fan) | PVV | **24590-PTF**<br>-M5-V17T-00021001, Rev 2<br>-M5-V17T-00021004, Rev 2<br>-P1-P01T-00002, Rev 7<br>-P1-P01T-00003, Rev 4<br>-P1-P01T-00004, Rev 6 | Section 4D.4.2; Table 4F-2, 4D-2; and Figures 4A-1, 4A-2 and 4A-2A of Operating Unit Group 10, Chapter 4 of this Permit. |
| **Pretreatment Pulse Jet Mixer Exhaust Vent System**<br><br>PJV-HEPA-00001A (PJV Primary Exhaust HEPA Filter)<br><br>PJV-HEPA-00001B (PJV Primary Exhaust HEPA Filter)<br><br>PJV-HEPA-00001C (PJV Primary Exhaust HEPA Filter)<br><br>PJV-HEPA-00001D (PJV Primary Exhaust HEPA Filter) | PJV | **24590-PTF**<br>-M5-V17T-00021002, Rev 2<br>-M6-PJV-00001, Rev 3<br>-M6-PJV-00002, Rev 3<br>-M6-PJV-00004001, Rev 0<br>-N1D-PJV-P0001, Rev 1<br>-P1-P01T-00001, Rev 8 | Section 4D.4.3; Table 4F-2, 4D-2; and Figures 4A-1, 4A-2 and 4A-2A of Operating Unit Group 10, Chapter 4 of this Permit. |

**Table III.10.G.A.i – Pretreatment Plant Vessel Vent Systems Associated with Pretreatment Plant Miscellaneous Unit Systems**

| Description | Designation | Description Drawings | Narrative Description, Tables & Figures |
|---|---|---|---|
| PJV-HEPA-00001E (PJV Primary Exhaust HEPA Filter)<br><br>PJV-HEPA-00001F (PJV Primary Exhaust HEPA Filter)<br><br>PJV-HEPA-00001G (PJV Primary Exhaust HEPA Filter)<br><br>PJV-HEPA-00002A (PJV Secondary Exhaust HEPA Filter)<br><br>PJV-HEPA-00002B (PJV Secondary Exhaust HEPA Filter)<br><br>PJV-HEPA-00002C (PJV Secondary Exhaust HEPA Filter)<br><br>PJV-HEPA-00002D (PJV Secondary Exhaust HEPA Filter)<br><br>PJV-HEPA-00002E (PJV Secondary Exhaust HEPA Filter)<br><br>PJV-HEPA-00002F (PJV Secondary Exhaust HEPA Filter) | | | |

**Table III.10.G.A.i – Pretreatment Plant Vessel Vent Systems Associated with Pretreatment Plant Miscellaneous Unit Systems**

| Description | Designation | Description Drawings | Narrative Description, Tables & Figures |
|---|---|---|---|
| **Pretreatment Pulse Jet Mixer Exhaust Vent System (Cont.)**<br><br>PJV-FAN-00001A (PJV Exhaust Fan)<br><br>PJV-FAN-00001B (PJV Exhaust Fan)<br><br>PJV-FAN-00001C (PJV Exhaust Fan) | PJV | **24590-PTF**<br>-M5-V17T-00021002, Rev 2<br>-M6-PJV-00001, Rev 3<br>-M6-PJV-00002, Rev 3<br>-M6-PJV-00004001, Rev 0<br>-N1D-PJV-P0001, Rev 1<br>-P1-P01T-00001, Rev 8 | Section 4D.4.3; Table 4F-2, 4D-2; and Figures 4A-1, 4A-2 and 4A-2A of Operating Unit Group 10, Chapter 4 of this Permit. |
| **Pretreatment Pulse Jet Mixer Exhaust Vent System (Cont.)**<br><br>PJV-DMST-00002A (PJV Demister)<br><br>PJV-DMST-00002B (PJV Demister)<br><br>PJV-DMST-00002C (PJV Demisters) | PJV | **24590-PTF**<br>-M5-V17T-00021002, Rev 2<br>-M6-PJV-00001, Rev 3<br>-M6-PJV-00002, Rev 3<br>-M6-PJV-00004001, Rev 0<br>-N1D-PJV-P0001, Rev 1<br>-P1-P01T-00003, Rev 4 | Section 4D.4.3; Table 4F-2, 4D-2; and Figures 4A-1, 4A-2 and 4A-2A of Operating Unit Group 10, Chapter 4 of this Permit. |

[a] The Pretreatment Vessel Vent Process (PVP), Process Vessel Vent Systems (PVV), and Pulse Jet Mixer Exhaust System (PJV) specified in Permit Table III.10.G.A.i are shared between the Pretreatment Plant Miscellaneous Unit Systems. Any references in this Permit to the individual Pretreatment Plant Miscellaneous Unit Systems are also a reference to the Pretreatment Vessel Vent Process (PVP), Process Vessel Vent Systems (PVV), and Pulse Jet Mixer Exhaust System (PJV) Systems. Any reference in this Permit to Permit Table III.10.G.A is also a reference to Permit Table III.10.G.A.i.

**Table III.10.G.B – Pretreatment Plant Miscellaneous Unit Secondary Containment Systems Including Sumps, Bulges, and Floor Drains**

| Sump, Bulge or Floor Drain I.D.# & Room Location | Maximum Sump/Bulge (gallons), or Drain Line (gallons per minute) Capacity | Sump Type/Nominal Operating Volume (gallons) | Sump, Bulge or Drain Line Dimensions[a] (inches) & Materials of Construction | Engineering Description (Drawings No.'s, Specification No.'s etc.) |
|---|---|---|---|---|
| PVP-ZY-00037-S11B-03, P-0105 (PVP-BULGE-00001, El. 0') | | | 3"<br>Stainless Steel | **24590-PTF**<br>-M6-PVP-00017002, Rev 0 |
| PVP-ZY-00036-S11B-03, P-0101A (PVP-BULGE-00002, El. 0') | | | 3"<br>Stainless Steel | **24590-PTF**<br>-M6-PVP-00018002, Rev 0 |
| PVP-ZY-00056-S11B-03, P-0302 (PVP-BULGE-00014, El. 56') | | | 3"<br>Stainless Steel | **24590-PTF**<br>-M6-PVP-00017003, Rev 0 |
| PWD-FD-00323P-0304 Drain, El. 56' | 140 | N/A | 6" Dia<br>316L | **24590-PTF**<br>-M6-PWD-00044, Rev 3 |
| PWD-FD-00324<br>P-0304 Drain, El. 56' | 140 | N/A | 6" Dia<br>316L | **24590-PTF**<br>-M6-PWD-00044, Rev 3 |
| PWD-FD-00325<br>P-0304 Drain, El. 56' | 140 | N/A | 6" Dia<br>316L | **24590-PTF**<br>-M6-PWD-00044, Rev 3 |
| PWD-FD-00326<br>P-0304 Drain, El. 56' | 140 | N/A | 6" Dia<br>316L | **24590-PTF**<br>-M6-PWD-00044, Rev 3 |
| PWD-FD-00327<br>P-0304 Drain, El. 56' | 140 | N/A | 6" Dia<br>316L | **24590-PTF**<br>-M6-PWD-00044, Rev 3 |
| PWD-FD-00512<br>P-0320 Drain, El. 56' | 140 | N/A | 6" Dia<br>316L | **24590-PTF**<br>-M6-PWD-00043, Rev 3 |
| PWD-FD-00513<br>P-0320 Drain, El. 56' | 140 | N/A | 6" Dia<br>316L | **24590-PTF**<br>-M6-PWD-00043, Rev 3 |

| | | | | |
|---|---|---|---|---|
| PWD-FD-00514<br>P-0320 Drain, El. 56’ | 140 | N/A | 6” Dia<br>316L | **24590-PTF**<br>-M6-PWD-00043, Rev 3 |
| PWD-FD-00515<br>P-0325 Drain, El. 56’ | 140 | N/A | 6” Dia<br>316L | **24590-PTF**<br>-M6-PWD-00043, Rev 3 |
| PWD-FD-00516<br>P-0325 Drain, El. 56’ | 140 | N/A | 6” Dia<br>316L | **24590-PTF**<br>-M6-PWD-00043, Rev 3 |
| PWD-FD-00517<br>P-0325 Drain, El. 56’ | 655 | N/A | 8” Dia<br>316L | **24590-PTF**<br>-M6-PWD-00043, Rev 3 |
| PWD-FD-00557<br>P-0430 Drain, El. 77’ | 140 | N/A | 6” Dia<br>304L | **24590-PTF**<br>-M6-PWD-00043, Rev 3 |
| PWD-FD-00561<br>P-0430 Drain, El. 77’ | 140 | N/A | 6” Dia<br>304L | **24590-PTF**<br>-M6-PWD-00043, Rev 3 |
| RESERVED | RESERVED | RESERVED | RESERVED | RESERVED |
| [a]Dimensions listed are based on permitted design. Actual dimensions may vary within plus or minus (TBD). | | | | |

**Table III.10.G.C. – Pretreatment Plant Miscellaneous Unit System Process and Leak Detection Instruments and Parameters**

| Miscellaneous Unit System Locator and Name (including P&ID) | Control Parameter | Type of Measuring or Leak Detection Instrument | Location of Measuring Instrument (Tag No.) | Instrument Range | Failure State | Expected Range | Instrument Accuracy | Operating Trips (Descrip-tion & Numerical Limits) | Instrument Calibration Method No. and Range |
|---|---|---|---|---|---|---|---|---|---|
| PVP-BULGE-00001[a] | RESERVED | RESERVED | RESERVED | RESERVED | RESERVED | RESERVED | RESERVED | RESERVED | RESERVED |
| PVP-BULGE-00014[a] | RESERVED | RESERVED | RESERVED | RESERVED | RESERVED | RESERVED | RESERVED | RESERVED | RESERVED |
| RESERVED | RESERVED | RESERVED | RESERVED | RESERVED | RESERVED | RESERVED | RESERVED | RESERVED | RESERVED |
| [a]Sump locator (including P&ID designator) is located on Permit Table III.10.G.B – Pretreatment Plant Miscellaneous Unit Secondary Containment Systems Including Sumps, Bulges, and Floor Drains. | | | | | | | | | |

1

**Table III.10.G.D. – Pretreatment Plant Miscellaneous Unit Systems Estimated Emission Rates**

| Chemicals | CAS Number | Emission Rates (grams/second) |
|---|---|---|
| RESERVED | RESERVED | RESERVED |

2

## III.10.H LAW VITRIFICATION SYSTEM – SHORT TERM MISCELLANEOUS THERMAL TREATMENT UNIT-SHAKEDOWN, DEMONSTRATION TEST, AND POST DEMONSTRATION TEST

For purposes of Permit Section III.10.H, where reference is made to WAC 173-303-640, the following substitutions apply: substituting the terms "LAW Vitrification System" for "tank system(s)," "sub-system(s)" for "tank(s)," "sub-system equipment" for "ancillary equipment," and "sub-system(s) or sub-system equipment of a LAW Vitrification System" for "component(s)" in accordance with WAC 173-303-680.

### III.10.H.1 General Conditions During Shakedown, Demonstration Test, and Post-Demonstration Test for LAW Vitrification System

**III.10.H.1.a** Construction and Maintenance [WAC 173-303-640, in accordance with WAC 173-303-680(2) and (3), and WAC 173-303-340].

**III.10.H.1.a.i** The Permittees will construct the LAW Vitrification System (listed in Permit Tables III.10.H.A and B., as approved/modified pursuant to Permit Condition III.10.H.5.) as specified in Permit Condition III.10.H.1. and Operating Unit Group 10, Chapter 4 of this Permit, and Operating Unit Group 10, Appendices 9.1 through 9.15 and 9.17 of this Permit, as approved pursuant to Permit Conditions III.10.H.5.a. through d., and III.10.H.5.f.

**III.10.H.1.a.ii** The Permittees will construct all containment systems for the LAW Vitrification System as specified in Operating Unit Group 10, Chapter 4 of this Permit, and Operating Unit Group 10, Appendices 9.2 and 9.4 through 9.14 of this Permit, as approved pursuant to Permit Conditions III.10.H.5.a. through d.

**III.10.H.1.a.iii** The Permittees will ensure all certifications required by specialists (e.g., independent, qualified registered professional engineer, independent corrosion expert, independent, qualified installation inspector, etc.) use the following statement or equivalent pursuant to Permit Condition III.10.C.10.:

"I, (Insert Name) have (choose one or more of the following: overseen, supervised, reviewed, and/or certified) a portion of the design or installation of a new LAW Vitrification System or component located at (address), and owned/operated by (name(s)). My duties were: (e.g., installation inspector, testing for tightness, etc.), for the following LAW Vitrification System components (e.g., the venting piping, etc.), as required by the Dangerous Waste Regulations, namely, WAC 173-303-640(3) (applicable paragraphs (i.e., (a) through (g)) in accordance with WAC 173-303-680).

"I certify under penalty of law that I have personally examined and am familiar with the information submitted in this document and all attachments and that, based on my inquiry of those individuals immediately responsible for obtaining the information, I believe that the information is true, accurate, and complete. I am aware that there are significant penalties for submitting false information, including the possibility of fine and imprisonment."

**III.10.H.1.a.iv** The Permittees must ensure that proper handling procedures are adhered to in order to prevent damage to the LAW Vitrification System during installation. Prior to covering, enclosing, or placing the new LAW Vitrification System or component in use, an independent, qualified, installation inspector or an independent, qualified, registered professional engineer, either of whom is trained and experienced in the proper installation of similar systems or components, must inspect the system for the presence of any of the following items:

A. Weld breaks.
B. Punctures.
C. Scrapes of protective coatings.
D. Cracks.
E. Corrosion.
F. Other structural damage or inadequate construction/installation.

All discrepancies must be remedied before the LAW Vitrification System is covered, enclosed, or placed in use [WAC 173-303-640(3)(c), in accordance with WAC 173-303-680(2) and (3)].

**III.10.H.1.a.v** For the LAW Vitrification System or components that are placed underground and that are back-filled, the Permittees must provide a backfill material that is a non-corrosive, porous, homogeneous substance. The backfill must be installed so that it is placed completely around the LAW Vitrification System and compacted to ensure that the LAW Vitrification System is fully and uniformly supported [WAC 173-303-640(3)(d), in accordance with WAC 173-303-680(2) and (3)].

**III.10.H.1.a.vi** The Permittees must test for tightness the LAW Vitrification System or components, prior to being covered, enclosed, or placed into use. If the LAW Vitrification System or components are found not to be tight, all repairs necessary to remedy the leak(s) in the system must be performed prior to the LAW Vitrification System being covered, enclosed, or placed in use [WAC 173-303-640(3)(e), in accordance with WAC 173-303-680(2) and (3)].

**III.10.H.1.a.vii** The Permittees must ensure the LAW Vitrification System equipment is supported and protected against physical damage and excessive stress due to settlement, vibration, expansion, or contraction [WAC 173-303-640(3)(f), in accordance with WAC 173-303-680(2) and (3)].

**III.10.H.1.a.viii** The Permittees must provide the type and degree of corrosion protection recommended by an independent corrosion expert, based on the information provided in Operating Unit Group 10, Appendices 9.9 and 9.11 of this Permit, as approved pursuant to Permit Conditions III.10.H.5.b.i., III.10.H.5.b.iv., III.10.H.5.b.v., III.10.H.5.c.i., III.10.H.5.c.iv., III.10.H.5.c.v., III.10.H.5.d.i., III.10.H.5.d.iv., and III.10.H.5.d.v., or other corrosion protection if Ecology believes other corrosion protection is necessary to ensure the integrity of the LAW Vitrification System during use of the LAW Vitrification System. The installation of a corrosion protection system that is field fabricated must be supervised by an independent corrosion expert to ensure proper installation [WAC 173-303-640(3)(g), in accordance with WAC 173-303-680(2) and (3)].

**III.10.H.1.a.ix** Prior to initial receipt of dangerous and/or mixed waste in the WTP Unit, the Permittees will obtain and keep on file in the WTP Unit operating record, written statements by those persons required to certify the design of the LAW Vitrification System and supervise the installation of the LAW Vitrification System, as specified in WAC 173-303-640(3)(b), (c), (d), (e), (f), and (g), in accordance with WAC 173-303-680, attesting that the LAW Vitrification System and corresponding containment system listed in Permit Tables III.10.H.A and III.10.H.B, as approved/modified pursuant to Permit Condition III.10.H.5., were properly designed and installed, and that repairs, in accordance with WAC 173-303-640(3)(c) and (e) were performed [WAC 173-303-640(3)(a) and WAC 173-303-640(3)(h), in accordance with WAC 173-303-680(3)].

**III.10.H.1.a.x** The independent LAW Vitrification System installation inspection and subsequent written statements will be certified in accordance with WAC 173-303-810(13)(a), as modified pursuant to Permit Condition III.10.H.1.a.iii., comply with all requirements of WAC 173-303-640(3)(h) in accordance with WAC 173-303-680, and will consider, but not be limited to, the following LAW Vitrification System installation documentation:

A. Field installation report with date of installation.

B. Approved welding procedures.

C. Welder qualification and certifications.

D. Hydro-test reports, as applicable, in accordance with the American Society of Mechanical Engineers Boiler and Pressure Vessel Code, Section VIII, Division 1; American Petroleum Institute (API) Standard 620, or Standard 650, as applicable.

E. Tester credentials.

F. Field inspector credentials.

G. Field inspector reports.

H. Field waiver reports.

I. Non-compliance reports and corrective action (including field waiver reports) and repair reports.

**III.10.H.1.a.xi** The Permittees will ensure periodic integrity assessments are conducted on the LAW Vitrification System, listed in Permit Table III.10.H.A, as approved/modified pursuant to Permit Condition III.10.H.5., over the term of this Permit in accordance with WAC 173-303-680(2) and (3) as specified in WAC 173-303-640(3)(b), following the description of the integrity assessment program and schedule in Operating Unit Group 10, Chapter 6 of this Permit, as approved pursuant to Permit Conditions III.10.H.5.e.i. and III.10.C.5.c. Results of the integrity assessments will be included in the WTP Unit operating record until ten (10) years after post-closure, or corrective action is complete and certified, whichever is later.

**III.10.H.1.a.xii** The Permittees will address problems detected during the LAW Vitrification System integrity assessments specified in Permit Condition III.10.H.1.a.xi. following the integrity assessment program in Operating Unit Group 10, Chapter 6 of this Permit, as approved pursuant to Permit Conditions III.10.H.5.e.i. and III.10.C.5.c.

**III.10.H.1.a.xiii** All process monitors/instruments, as specified in Permit Table III.10.H.F, as approved/modified pursuant to Permit Condition III.10.H.5., will be equipped with operational alarms to warn of deviation, or imminent deviation from the limits specified in Permit Table III.10.H.F.

**III.10.H.1.a.xiv** The Permittees will install and test all process and leak detection system monitors/instrumentation as specified in Permit Tables III.10.H.C and III.10.H.F, as approved/modified pursuant to Permit Condition III.10.H.5, in accordance with Operating Unit Group 10, Appendices 9.1, 9.2, and 9.14 of this Permit, as approved pursuant to Permit Conditions III.10.H.5.d.x. and III.10.H.5.f.xvi.

**III.10.H.1.a.xv** Except during periods of LAW Vitrification System startup and shutdown, no dangerous and/or mixed waste will be treated in the LAW Vitrification System unless

the operating conditions, specified under Permit Condition III.10.H.1.c. are complied with.

**III.10.H.1.a.xvi** The Permittees will not place dangerous and/or mixed waste, treatment reagents, or other materials in the LAW Vitrification System if these substances could cause the subsystem, subsystem equipment, or the containment system to rupture, leak, corrode, or otherwise fail [WAC 173-303-640(5)(a), in accordance with WAC 173-303-680(2)]. This condition is not applicable to corrosion of LAW Vitrification System sub-system or sub-system equipment that are expected to be replaced as part of normal operations (e.g., melters).

**III.10.H.1.a.xvii** The Permittees will operate the LAW Vitrification System to prevent spills and overflows using controls and practices as required under WAC 173-303-640(5)(b) described in Permit Condition III.10.C.5 and Operating Unit Group 10, Appendix 9.18 of this Permit, as approved pursuant to Permit Condition III.10.H.5.e. [WAC 173-303-640(5)(b), in accordance with WAC 173-303-680(2) and (3), and WAC 173-303-806(4)(c)(ix)].

**III.10.H.1.a.xviii** For routinely non-accessible LAW Vitrification System sub-systems, as specified in Operating Unit Group 10, Chapter 4 of this Permit, as updated pursuant to Permit Condition III.10.H.5.e.vi., the Permittees will mark all routinely non-accessible LAW Vitrification System sub-systems access points with labels, or signs, to identify the waste contained in each LAW Vitrification System sub-system. The label, or sign, must be legible at a distance of at least fifty (50) feet, and must bear a legend which identifies the waste in a manner which adequately warns employees, emergency response personnel, and the public of the major risk(s) associated with the waste being stored or treated in the LAW Vitrification System sub-systems. For the purposes of this permit condition, "routinely non-accessible" means personnel are unable to enter these areas while waste is being managed in them [WAC 173-303-640(5)(d), in accordance with WAC 173-303-680(2)].

**III.10.H.1.a.xix** For all LAW Vitrification System sub-systems not addressed in Permit Condition III.10.H.1.a.xviii., the Permittees will mark all these LAW Vitrification System sub-systems holding dangerous and/or mixed waste with labels, or signs, to identify the waste contained in the LAW Vitrification System sub-systems. The labels, or signs, must be legible at a distance of at least fifty (50) feet, and must bear a legend which identifies the waste in a manner which adequately warns employees, emergency response personnel, and the public of the major risk(s) associated with the waste being stored or treated in the LAW Vitrification System sub-systems [WAC 173-303-640(5)(d), in accordance with WAC 173-303-680(2)].

**III.10.H.1.a.xx** The Permittees will ensure that the secondary containment systems for the LAW Vitrification System sub-systems listed in Permit Tables III.10.H.A. and III.10.H.B, as approved/modified pursuant to Permit Condition III.10.H.5, are free of cracks or gaps to prevent any migration of dangerous and/or mixed waste or accumulated liquid out of the system to the soil, groundwater, or surface water at any time during use of the LAW Vitrification System sub-systems. Any indication that a crack or gap may exist in the containment systems will be investigated and repaired in accordance with Operating Unit Group 10, Appendix 9.18 of this Permit, as approved pursuant to Permit Condition III.10.H.5.e.v. [WAC 173-303–640(4)(b)(i), WAC 173-303–640(4)(e)(i)(C), and WAC 173-303-640(6), in accordance with

WAC 173-303-680(2) and (3), WAC 173-303-806(4)(i)(i)(B), and WAC 173-303-320].

**III.10.H.1.a.xxi** The Permittees must immediately, and safely, remove from service any LAW Vitrification System or secondary containment system which through an integrity assessment is found to be "unfit for use" as defined in WAC 173-303-040, following Permit Conditions III.10.H.1.a.xxiii.,A. through D., and F. The affected LAW Vitrification System or secondary containment system must be either repaired or closed in accordance with Permit Condition III.10.H.1.a.xxiii.E. [WAC 173-303-640(7)(e) and (f), WAC 173-303-640(8), in accordance with WAC 173-303-680(3)].

**III.10.H.1.a.xxii** .An impermeable coating, as specified in Operating Unit Group 10, Appendices 9.4, 9.5, 9.7, 9.9, 9.11, and 9.12 of this Permit, as approved pursuant to Permit Condition III.10.H.5.b.v. will be maintained for all concrete containment systems and concrete portions of containment systems for each LAW Vitrification System sub-systems listed in Permit Tables III.10.H.A and III.10.H.B, as approved/modified pursuant to Permit Condition III.10.H.5 (concrete containment systems that do not have a liner, pursuant to WAC 173-303-640(4)(e)(i), in accordance with WAC 173-303-680(2), and have construction joints, will meet the requirements of WAC 173-303-640(4)(e)(ii)(C), in accordance with WAC 173-303-680(2). The coating will prevent migration of any dangerous and mixed waste into the concrete. All coatings will meet the following performance standards:

A. The coating must seal the containment surface such that no cracks, seams, or other avenues through which liquid could migrate are present;

B. The coating must be of adequate thickness and strength to withstand the normal operation of equipment and personnel within the given area such that degradation or physical damage to the coating or lining can be identified and remedied before dangerous and mixed waste could migrate from the system; and

C. The coating must be compatible with the dangerous and mixed waste, treatment reagents, or other materials managed in the containment system [WAC 173-303-640(4)(e)(ii)(D), in accordance with WAC 173-303-680(2) and (3), and WAC 173-303-806(4)(i)(i)(A)].

**III.10.H.1.a.xxiii** The Permittees will inspect all secondary containment systems for the LAW Vitrification System sub-systems listed in Permit Tables III.10.H.A and III.10.H.B, as approved/modified pursuant to Permit Condition III.10.H.5., in accordance with the Inspection Plan specified in Operating Unit Group 10, Chapter 6A of this Permit, as approved pursuant to Permit Conditions III.10.H.5.e.i. and III.10.C.5.c., and take the following actions if a leak or spill of dangerous and/or mixed waste is detected in these containment systems [WAC 173-303-640(5)(c) and WAC 173-303-640(6), in accordance with WAC 173-303-680(2) and (3), WAC 173-303-320, and WAC 173-303-806(4)(i)(i)(B)]:

A. Immediately, and safely, stop the flow of dangerous and/or mixed waste into the LAW Vitrification System sub-systems or secondary containment system.

B. Determine the source of the dangerous and/or mixed waste.

C. Remove the dangerous and/or mixed waste from the containment area in accordance with WAC 173-303-680(2) and (3) as specified in WAC 173-303-640(7)(b). The dangerous and/or mixed waste removed from containment areas

of the LAW Vitrification System sub-systems will be, as a minimum, managed as mixed waste.

D. If the cause of the release was a spill that has not damaged the integrity of the LAW Vitrification System sub-system, the Permittees may return the LAW Vitrification System sub-system to service in accordance with WAC 173-303-680(2) and (3) as specified in WAC 173-303-640(7)(e)(ii). In such case, the Permittees will take action to insure the incident that caused the dangerous and/or mixed waste to enter the containment system will not reoccur [WAC 173-303-320(3)].

E. If the source of the dangerous and/or mixed waste is determined to be a leak from the primary LAW Vitrification System into the secondary containment system, or the system is unfit for use as determined through an integrity assessment or other inspection, the Permittees will comply with the requirements of WAC 173-303-640(7) and take the following actions:

1. Close the LAW Vitrification System sub-system following procedures in WAC 173-303-640(7)(e)(i), in accordance with WAC 173-303-680 and Operating Unit Group 10, Chapter 11 of this Permit, as approved pursuant to Permit Condition III.10.C.8., or

2. Repair and re-certify (in accordance with WAC 173-303-810(13)(a), as modified pursuant to Permit Condition III.10.H.1.a.iii.) the LAW Vitrification System, in accordance with Operating Unit Group 10, Appendix 9.18 of this Permit, as approved pursuant to Permit Condition III.10.H.5.e.v., before the LAW Vitrification System is placed back into service [WAC 173-303-640(7)(e)(iii) and WAC 173-303-640(7)(f), in accordance with WAC 173-303-680].

F. The Permittees will document in the operating record actions/procedures taken to comply with A. through E. above as specified in WAC 173-303-640(6)(d), in accordance with WAC 173-303-680(2) and (3).

G. In accordance with WAC 173-303-680(2) and WAC 173-303-680 (3), the Permittees will notify and report releases to the environment to Ecology as specified in WAC 173-303-640(7)(d).

**III.10.H.1.a.xxiv** If liquids (e.g., dangerous and/or mixed waste leaks and spills, precipitation, fire water, liquids from damaged or broken pipes) cannot be removed from the secondary containment system within twenty-four (24) hours, Ecology will be verbally notified within twenty-four (24) hours of discovery. The notification will provide the information in A, B, and C, listed below. The Permittees will provide Ecology with a written demonstration within seven (7) business days, identifying at a minimum [WAC 173-303-640(4)(c)(iv) and WAC 173-303-640(7)(b)(ii), in accordance with WAC 173-303-680(3) and WAC 173-303-806(4)(i)(i)(B)]:

A. Reasons for delayed removal.

B. Measures implemented to ensure continued protection of human health and the environment.

C. Current actions being taken to remove liquids from secondary containment.

**III.10.H.1.a.xxv** All air pollution control devices and capture systems in the LAW Vitrification System will be maintained and operated at all times in a manner so as to minimize the emissions of air contaminants and to minimize process upsets. Procedures for ensuring that the air pollution control devices and capture systems in the LAW

Vitrification System are properly operated and maintained so as to minimize the emission of air contaminants and process upsets will be established.

**III.10.H.1.a.xxvi** In all future narrative permit submittals, the Permittees will include LAW Vitrification sub-system names with the sub-system designation.

**III.10.H.1.a.xxvii** Modifications to approved design, plans, and specifications in Operating Unit Group 10 of this Permit for the LAW Vitrification System will be allowed only in accordance with Permit Conditions III.10.C.2.e. and f., or III.10.C.2.g., III.10.C.9.d., III.10.C.9.e., and III.10.C.9.h.

**III.10.H.1.a.xxviii** For any portion of the LAW Vitrification System which has the potential for formation and accumulation of hydrogen gases, the Permittees will operate the portion to maintain hydrogen levels below the lower explosive limit [WAC 173-303-815(2)(b)(ii)].

**III.10.H.1.a.xxix** For each LAW Vitrification System sub-system holding dangerous waste which are acutely or chronically toxic by inhalation, the Permittees will operate the system to prevent escape of vapors, fumes or other emissions into the air [WAC 173-303-806(4)(i)(i)(B) and WAC 173-303-640(5)(e), in accordance with WAC 173-303-680].

**III.10.H.1.b** Performance Standards

**III.10.H.1.b.i** The LAW Vitrification System must achieve a destruction and removal efficiency (DRE) of 99.99% for the principal organic dangerous constituents (PODCs) listed below [40 CFR §63.1203(c)(1), 40 CFR §63.1203(c)(2), in accordance with WAC 173-303-680(2)]:

RESERVED

DRE in this permit condition will be calculated in accordance with the formula given below:

$DRE=[1-(W_{out}/W_{in})] \times 100\%$

Where:

$W_{in}$=mass feed-rate of one principal organic dangerous constituent (PODC) in a waste feed stream; and

$W_{out}$=mass emission rate of the same PODC present in exhaust emissions prior to release to the atmosphere.

**III.10.H.1.b.ii** Particulate matter emissions from the LAW Vitrification System will not exceed 34 mg/dscm (0.015 grains/dscf) [40 CFR §63.1203(b)(7), in accordance with WAC 173-303-680(2)].

**III.10.H.1.b.iii** Hydrochloric acid and chlorine gas emissions from the LAW Vitrification System will not exceed 21 ppmv, combined [40 CFR §63.1203(b)(6), in accordance with WAC 173-303-680(2)].

**III.10.H.1.b.iv** Dioxin and Furan TEQ emissions from the LAW Vitrification System will not exceed 0.2 nanograms (ng)/dscm [40 CFR §63.1203(b)(1), in accordance with WAC 173-303-680(2)].

**III.10.H.1.b.v** Mercury emissions from the LAW Vitrification System will not exceed 45 µg/dscm [40 CFR §63.1203(b)(2), in accordance with WAC 173-303-680(2)].

**III.10.H.1.b.vi** Lead and cadmium emissions from the LAW Vitrification System will not exceed 120 µg/dscm, combined [40 CFR §63.1203(b)(3), in accordance with WAC 173-303-680(2)].

**III.10.H.1.b.vii** Arsenic, beryllium, and chromium emissions from the LAW Vitrification System will not exceed 97 µg/dscm, combined [40 CFR §63.1203(b)(4), in accordance with WAC 173-303-680(2)].

**III.10.H.1.b.viii** Carbon monoxide (CO) emission from the LAW Vitrification System will not exceed 100 parts per million (ppm) by volume, over an hourly rolling average (as measured and recorded by the continuous monitoring system), dry basis [40 CFR §63.1203(b)(5)(i), in accordance with WAC 173-303-680(2)].

**III.10.H.1.b.ix** Hydrocarbon emission from the LAW Vitrification System will not exceed 10 parts per million (ppm) by volume, over an hourly rolling average (as measured and recorded by the continuous monitoring system during demonstration testing required by this Permit), dry basis, and reported as propane [40 CFR §63.1203(b)(5)(ii), in accordance with WAC 173-303-680(2)].

**III.10.H.1.b.x** If the emissions from the LAW Vitrification System exceed the emission rates listed in Permit Table III.10.H.E, as approved pursuant to Permit Condition III.10.C.11.b., the Permittees will notify Ecology in accordance with Permit Condition III.10.H.3.d.vii. [WAC 173-303-680(2) and (3), and WAC 173-303-815(2)(b)(ii)].

The emission limits specified in Permit Conditions III.10.H.1.b.i. through III.10.H.1.b.ix. above, will be met for the LAW Vitrification System by limiting feed-rates as specified in Permit Tables III.10.H.D. and III.10.H.F., as approved/modified pursuant to Permit Condition III.10.H.5., compliance with operating conditions specified in Permit Condition III.10.H.1.c. (except as specified in Permit Condition III.10.H.1.b.xii.), and compliance with Permit Condition III.10.H.1.b.xi.

**III.10.H.1.b.xi** Treatment effectiveness, feed-rates and operating rates for dangerous and mixed waste management units contained in the LAW Building, but not included in Permit Table III.10.H.A, as approved/modified pursuant to Permit Condition III.10.H.5., will be as specified in Permit Sections III.10.D, III.10.E, III.10.F and consistent with assumptions and basis which are reflected in Operating Unit Group 10, Appendix 6.3 of this Permit, as approved pursuant to Permit Condition III.10.C.11.b. For the purposes of this permit condition, Operating Unit Group 10, Appendix 6.3 will be superseded by Appendix 6.4 upon its approval pursuant to either Permit Conditions III.10.C.11.c. or III.10.C.11.d. [WAC 173-303-680(2) and (3), and WAC 173-303-815(2)(b)(ii)].

**III.10.H.1.b.xii** Except during periods of LAW Vitrification System startup and shutdown, compliance with the operating conditions specified in Permit Condition III.10.H.1.c.,will be regarded as compliance with the required performance standards identified in Permit Conditions III.10.H.1.b.i. through x. However, if it is determined that during the effective period of this Permit that compliance with the operating conditions in Permit Condition III.10.H.1.c. is not sufficient to ensure compliance with the performance standards specified in Permit Conditions III.10.H.1.b.i. through x., the Permit may be modified, revoked, or reissued pursuant to Permit Conditions III.10.C.2.e. and III.10.C.2.f., or III.10.C.2.g.

**III.10.H.1.c** Operating Conditions [WAC 173-303-670(6), in accordance with WAC 173-303-680(2) and (3)].

The Permittees will operate the LAW Vitrification System in accordance with Operating Unit Group 10, Chapter 4 of this Permit, as updated pursuant to Permit Condition III.10.H.5.e.vi., Operating Unit Group 10, Appendix 9.18 of this Permit, as approved pursuant to Permit Condition III.10.H.5.e., and Operating Unit Group 10, Appendix 9.15 of this Permit, as approved pursuant to Permit Condition III.10.H.5.f., except as modified pursuant to Permit Conditions III.10.H.1.b.xii., III.10.H.2., III.10.H.3., III.10.H.4., and in accordance with the following:

**III.10.H.1.c.i** The Permittees will operate the LAW Vitrification System in order to maintain the systems and process parameters listed in Permit Tables III.10.H.C and III.10.H.F, as approved/modified pursuant to Permit Condition III.10.H.5., within the set-points specified in Permit Table III.10.H.F.

**III.10.H.1.c.ii** The Permittees will operate the AWFCO systems, specified in Permit Table III.10.H.F, as approved/modified pursuant to Permit Condition III.10.H.5., to automatically cut-off and/or lock-out the dangerous and mixed waste feed to the LAW Vitrification System when the monitored operating conditions deviate from the set-points specified in Permit Table III.10.H.F.

**III.10.H.1.c.iii** The Permittees will operate the AWFCO systems, specified in Permit Table III.10.H.F, as approved/modified pursuant to Permit Condition III.10.H.5., to automatically cut-off and/or lock-out the dangerous and mixed waste feed to the LAW Vitrification System when all instruments specified on Permit Table III.10.H.F for measuring the monitored parameter fail or exceed its span value.

**III.10.H.1.c.iv** The Permittees will operate the AWFCO systems, specified in Permit Table III.10.H.F, as approved/modified pursuant to Permit Condition III.10.H.5., to automatically cut-off and/or lock out the dangerous and/or mixed waste feed to the LAW Vitrification System when any portion of the LAW Vitrification System is bypassed. The terms “bypassed” and “bypass event” as used in Permit Sections III.10.H and III.10.I will mean if any portion of the LAW Vitrification System is bypassed so that gases are not treated as during the Demonstration Test.

**III.10.H.1.c.v** In the event of a malfunction of the AWFCO systems listed in Permit Table III.10.H.F, as approved/modified pursuant to Permit Condition III.10.H.5., the Permittees will immediately, manually cut-off the dangerous and mixed waste feed to the LAW Vitrification System. The Permittees will not restart the dangerous and/or mixed waste feed until the problem causing the malfunction has been identified and corrected.

**III.10.H.1.c.vi** The Permittees will manually cut-off the dangerous and mixed waste feed to the LAW Vitrification System when the operating conditions deviate from the limits specified in Permit Condition III.10.H.1.c.i., unless the deviation automatically activates the waste feed cut-off sequence specified in Permit Conditions III.10.H.1.c.ii., III.10.H.1.c.iii., and/or III.10.H.1.c.iv.

**III.10.H.1.c.vii** If greater than thirty (30) dangerous and mixed waste feed cut-off, combined, to the LAW Vitrification System occur due to deviations from Permit Table III.10.H.F, as approved/modified pursuant to Permit Condition III.10.H.5., within a sixty (60) day period, the Permittees will submit a written report to Ecology within five (5) calendar days of the thirty-first exceedance including the information specified below. These dangerous and mixed waste feed cut-offs to the LAW Vitrification System, whether

automatically or manually activated, are counted if the specified set points are deviated from while dangerous waste, mixed waste, and waste residues continue to be processed in the LAW Vitrification System. A cascade event is counted at a frequency of one (1) towards the first waste feed cut-off parameter, specified on Permit Table III.10.H.F, from which the set-point is deviated:

A. The parameter(s) that deviated from the set-point(s) in Permit Table III.10.H.F.

B. The magnitude, dates, and duration of the deviations.

C. Results of the investigation of the cause of the deviations.

D. Corrective measures taken to minimize future occurrences of the deviations.

**III.10.H.1.c.viii** If any portion of the LAW Vitrification System is bypassed while treating dangerous and/or mixed waste it will be regarded as non-compliance with the operating conditions specified in Permit Condition III.10.H.1.c. and the performance standards specified in Permit Condition III.10.H.1.b. After such a bypass event, the Permittees will perform the following actions:

A. Investigate the cause of the bypass event.

B. Take appropriate corrective measures to minimize future bypasses.

C. Record the investigation findings and corrective measures in the operating record.

D. Submit a written report to Ecology within five (5) days of the bypass event documenting the result of the investigation and corrective measures.

**III.10.H.1.c.ix** The Permittees will control fugitive emissions from the LAW Vitrification System by maintaining the melters under negative pressure.

**III.10.H.1.c.x** Except during periods of vitrification system startup and shutdown, compliance with the operating conditions specified in Permit Condition III.10.H.1.c. will be regarded as compliance with the required performance standards identified in Permit Condition III.10.H.1.b. However, evidence that compliance with these operating conditions is insufficient to ensure compliance with the performance standards, will justify modification, revocation, or re-issuance of this Permit, in accordance with Permit Conditions III.10.C.2.e. and III.10.C.2.f., or III.10.C.2.g.

**III.10.H.1.d** Inspection Requirements [WAC 173-303-680(3)]

**III.10.H.1.d.i** The Permittees will inspect the LAW Vitrification System in accordance with the Inspection Plan in Operating Unit Group 10, Chapter 6A of this Permit, as modified in accordance with Permit Condition III.10.C.5.c.

**III.10.H.1.d.ii** The inspection data for LAW Vitrification System will be recorded, and the records will be placed in the WTP Unit operating record for the LAW Vitrification System, in accordance with Permit Condition III.10.C.4.

**III.10.H.1.d.iii** The Permittees will comply with the inspection requirements specified in Operating Unit Group 10, Appendix 9.15 of this Permit, as approved pursuant to Permit Condition III.10.H.5.f., and as modified by Permit Conditions III.10.H.1.b.xii., III.10.H.2., III.10.H.3., and III.10.H.4.

**III.10.H.1.e** Monitoring Requirements [WAC 173-303-670(5), WAC 173-303-670(6), WAC 173-303-670(7) and WAC 173-303-807(2), in accordance with WAC 173-303-680(3)]

**III.10.H.1.e.i** Upon receipt of a written request from Ecology, the Permittees will perform sampling and analysis of the dangerous and mixed waste and exhaust emissions to verify that

the operating requirements established in the Permit achieve the performance standards delineated in this Permit.

**III.10.H.1.e.ii** The Permittees will comply with the monitoring requirements specified in Operating Unit Group 10, Appendices 9.2, 9.3, 9.7, 9.13, 9.15 and 9.18 of this Permit, as approved pursuant to Permit Conditions III.10.H.5.c., III.10.H.5.d., III.10.H.5.e., and III.10.H.5.f., as modified by Permit Conditions III.10.H.1.b.xii., III.10.H.2., III.10.H.3., and III.10.H.4.

**III.10.H.1.e.iii** The Permittees will operate, calibrate, and maintain the carbon monoxide and hydrocarbon continuous emission monitors (CEM) specified in this Permit in accordance with Performance Specification 4B and 8A of 40 CFR Part 60, Appendix B, in accordance with Appendix to Subpart EEE of 40 CFR Part 63, and Operating Unit Group 10 Appendix 9.15 of this Permit, as approved pursuant to Permit Condition III.10.H.5.f., and as modified by Permit Conditions III.10.H.1.b.xii., III.10.H.2., III.10.H.3., and III.10.H.4.

**III.10.H.1.e.iv** The Permittees will operate, calibrate, and maintain the instruments specified on Permit Tables III.10.H.C, and F, as approved/modified pursuant to Permit Condition III.10.H.5., in accordance with Operating Unit Group 10, Appendix 9.15 of this Permit, as approved pursuant to Permit Condition III.10.H.5.f., and as modified by Permit Conditions III.10.H.1.b.xii., III.10.H.2., III.10.H.3., and III.10.H.4.

**III.10.H.1.f** Recordkeeping Requirements [WAC 173-303-380 and WAC 173-303-680(3)]

**III.10.H.1.f.i** The Permittees will record and maintain in the WTP Unit operating record for the LAW Vitrification System, all monitoring, calibration, maintenance, test data, and inspection data compiled under the conditions of this Permit, in accordance with Permit Conditions III.10.C.4. and III.10.C.5., as modified by Permit Conditions III.10.H.1.b.xii., III.10.H.2., III.10.H.3., and III.10.H.4.

**III.10.H.1.f.ii** The Permittees will record in the WTP Unit operating record the date, time, and duration of all automatic waste feed cutoffs and/or lockouts, including the triggering parameters, reason for the deviation, and recurrence of the incident. The Permittees will also record all incidents of AWFCO system function failures, including the corrective measures taken to correct the condition that caused the failure.

**III.10.H.1.f.iii** The Permittees will submit to Ecology a report semi-annually the first calendar year, and annually thereafter each calendar year within ninety (90) days following the end of the year. The report will include the following information:

A. Total dangerous and mixed waste feed processing time for the LAW Vitrification System;

B. Date/Time of all LAW Vitrification System startups and shutdowns;

C. Date/Time/Duration/Cause/Corrective Action taken for all LAW Vitrification System shutdowns caused by malfunction of either process or control equipment; and

D. Date/Time/Duration/Cause/Corrective Action taken for all instances of dangerous and/or mixed waste feed cut-off due to deviations from Permit Table III.10.H.F, as approved/modified pursuant to Permit Condition III.10.H.5.

**III.10.H.1.f.iv** The Permittees will submit an annual report to Ecology each calendar year within ninety (90) days following the end of the year of all quarterly CEM Calibration Error and Annual CEM Performance Specification Tests conducted in accordance with Permit Condition III.10.H.1.e.iii.

**III.10.H.1.g** Closure

The Permittees will close the LAW Vitrification System in accordance with Operating Unit Group 10, Chapter 11 of this Permit, as approved pursuant to Permit Condition III.10.C.8.

**III.10.H.2 Shakedown Period [WAC 173-303-670(5), WAC 173-303-670(6), WAC 173-303-670(7), and WAC 173-303-807(2), in accordance with WAC 173-303-680(2) and (3)].**

**III.10.H.2.a** The shakedown period for the LAW Vitrification System will be conducted in accordance with Permit Condition III.10.H.1., Operating Unit Group 10, Appendix 9.15 of this Permit, as approved pursuant to Permit Condition III.10.H.5.f., and as modified in accordance with Permit Conditions III.10.H.1.b.xii., III.10.H.2., and III.10.H.3.

**III.10.H.2.b** Duration of the Shakedown Period

**III.10.H.2.b.i** The shakedown period for the LAW Vitrification System will begin with the initial introduction of dangerous waste in the LAW Vitrification System following construction and will end with the start of the demonstration test.

**III.10.H.2.b.ii** The shakedown period will not exceed the following limits, as defined by hours, when the LAW Vitrification System is processing dangerous waste. The Permittees may petition Ecology for one extension of each shakedown phase for seven hundred and twenty (720) additional operating hours in accordance with Permit modification procedures specified in Permit Conditions III.10.C.2.e. and III.10.C.2.f.

Shakedown Phase 1: 720 hours

Shakedown Phase 2: 720 hours

**III.10.H.2.b.iii** Shakedown Phase 2 will not be commenced until documentation has been submitted to Ecology verifying that the LAW Vitrification System has operated at a minimum of 75% of the shakedown Phase 1 feed-rate limit for two (2) separate eight (8) consecutive hour periods with no AWFCOs.

**III.10.H.2.c** Allowable Waste Feed During the Shakedown Period

**III.10.H.2.c.i** The Permittees may feed the dangerous waste specified for the LAW Vitrification System on the Part A Forms (Operating Unit Group 10, Chapter 1 of this Permit), except for those wastes outside the waste acceptance criteria specified in the WAP, Attachment 1, Chapter 3 of this Permit, as approved pursuant to Permit Condition III.10.C.3., except Permit Conditions III.10.H.2.c.ii. through v. also apply.

**III.10.H.2.c.ii** The Permittees will not feed the following wastes to the LAW Vitrification System during Shakedown Phase 1:

A. Acutely toxic dangerous waste listed in WAC 173-303-081(a)(2)(a)(i).

B. Mixed waste

**III.10.H.2.c.iii** The Permittees will not feed the following waste to the LAW Vitrification System during Shakedown Phase 2:

A. Mixed waste

**III.10.H.2.c.iv** The feed-rates to the LAW Vitrification System will not exceed the limits in Permit Tables III.10.H.D and III.10.H.F, as approved/modified pursuant to Permit Condition III.10.H.5.

**III.10.H.2.c.v** The Permittees will conduct sufficient analysis of the dangerous waste treated in the LAW Vitrification System to verify that the waste feed is within the physical and chemical composition limits specified in this Permit.

**III.10.H.3 Demonstration Test Period [WAC 173-303-670(5), WAC 173-303-670(6), WAC 173-303-670(7), and WAC 173-303-807(2), in accordance with WAC 173-303-680(2) and (3)].**

**III.10.H.3.a** Demonstration Test Period

**III.10.H.3.a.i** The Permittees will operate, monitor, and maintain the LAW Vitrification System as specified in Permit Condition III.10.H.1., and Operating Unit Group 10, Appendix 9.15 of this Permit, as approved pursuant to Permit Condition III.10.H.5.f., except as modified in accordance with Permit Conditions III.10.H.1.b.xii., and III.10.H.3.

**III.10.H.3.a.ii** Operating Unit Group 10, Appendix 9.15 of this Permit, as approved pursuant to Permit Condition III.10.H.5.f., will be resubmitted to Ecology for approval by the Permittees as a permit modification pursuant to Permit Conditions III.10.C.2.e. and III.10.C.2.f. at least one hundred and eighty (180) days prior to the start date of the demonstration test. The revised Demonstration Test Plan will include applicable EPA promulgated test methods and procedures in effect at the time of the re-submittal and projected commencement and completion dates for the Demonstration Test.

**III.10.H.3.a.iii** The Permittees will not commence the demonstration test period until documentation has been submitted to Ecology verifying that the LAW Vitrification System has operated at a minimum of 75% of the demonstration test period feed-rate limit for a minimum of an eight (8) consecutive hours period on two (2) consecutive days.

**III.10.H.3.b** Performance Standards

The Permittees will demonstrate compliance with the performance standards specified in Permit Condition III.10.H.1.b. during the Demonstration Test Period.

**III.10.H.3.c** Allowable Waste Feed During the Demonstration Test Period

**III.10.H.3.c.i** The Permittees may feed the dangerous waste specified for the LAW Vitrification System in Part A Forms (Operating Unit Group 10, Chapter 1 of this Permit), except for those waste outside the waste acceptance criteria specified in the WAP, Operating Unit Group 10, Chapter 3 of this Permit, as approved pursuant to Permit Condition III.10.C.3., except Permit Conditions III.10.H.3.c.ii. through iv. also apply.

**III.10.H.3.c.ii** The Permittees will not feed mixed waste to the LAW Vitrification System.

**III.10.H.3.c.iii** The dangerous waste feed-rates to the LAW Vitrification System will not exceed the limits in Permit Tables III.10.H.D and F, as approved/modified pursuant to Permit Condition III.10.H.5.

**III.10.H.3.c.iv** The Permittees will conduct sufficient analysis of the dangerous waste treated in the LAW Vitrification System to verify that the dangerous waste is within the physical and chemical composition limits specified in this Permit.

**III.10.H.3.d** Demonstration Data Submissions and Certifications

**III.10.H.3.d.i** The Permittees will submit to Ecology a complete demonstration test report within one-hundred eighty (180) calendar days of completion of the Demonstration Test including all data collected during the Demonstration Test and updated Permit Tables III.10.I.D, III.10.I.E and III.10.I.F.

**III.10.H.3.d.ii** The Permittees must submit the following information to Ecology prior to receiving Ecology's approval to commence feed of dangerous waste and mixed waste to the LAW Vitrification System:

A. The Permittees will submit a summary of data collected as required by the Demonstration Test Plan to Ecology upon completion of the Demonstration Test.

B. A certification that the Demonstration Test has been carried out in accordance with the approved Demonstration Test Plan and approved modifications within thirty (30) days of the completion of the Demonstration Test [WAC 173-303-807(8)].

C. Calculations and analytical data showing compliance with the performance standards specified in Permit Conditions III.10.H.1.b.i, III.10.H.1.b.iv, III.10.H.1.b.v, III.10.H.1.b.vi, and III.10.H.1.b.vii

D. Laboratory data QA/QC summary for the information provided in III.10.H.3.d.ii.C.

**III.10.H.3.d.iii** After successful completion of the Demonstration Test and receipt of Ecology's approval, the Permittees will be authorized to commence feed of dangerous waste and mixed waste to the LAW Vitrification System for the post-demonstration test period indicated in Permit Tables III.10.H.D and F, as approved/modified pursuant to Permit Condition III.10.H.5., in compliance with the operating requirements specified in Permit Condition III.10.H.1.c. and within the limitations specified in Permit Condition.III.10.C.14.

**III.10.H.3.d.iv** RESERVED

**III.10.H.3.d.v** After successful completion of the Demonstration Test, Permittees submittal of the following to Ecology and the Permittees receipt of approval of the following in writing, the Permittees will be authorized to feed dangerous waste and mixed waste to the LAW Vitrification System pursuant to Permit Section III.10.I.

A. A complete Demonstration Test Report for the LAW Vitrification System and updated Permit Tables III.10.I.D, III.10.I.E, and III.10.I.F, as approved/modified pursuant to Permit Conditions III.10.H.5 and III.10.C.11.c or III.10.C.11.d. The test report will be certified in accordance with WAC 173-303-807(8), in accordance with WAC 173-303-680(2) and (3).

B. A Final Risk Assessment Report completed pursuant to Permit Conditions III.10.C.11.c. or III.10.C.11.d.

**III.10.H.3.d.vi** If any calculations or testing results show that one or more of the performance standards listed in Permit Condition III.10.H.1.b., with the exception of Permit Condition III.10.H.1.b.x., for the LAW Vitrification System were not met during the Demonstration Test, the Permittees will perform the following actions:

A. Immediately stop dangerous and mixed waste feed to the LAW Vitrification System under the mode of operation that resulted in not meeting the performance standard(s).

B. Verbally notify Ecology within twenty-four (24) hours of discovery of not meeting the performance standard(s) as specified in Permit Condition I.E.21.

C. Investigate the cause of the failure and submit a report of the investigation findings to Ecology within fifteen (15) days of discovery of not meeting the performance standard(s).

D. Submit to Ecology within fifteen (15) days of discovery of not meeting the performance standard(s), documentation supporting a mode of operation where all performance standards listed in Permit Condition III.10.H.1.b., with the exception of Permit Condition III.10.H.1.b.x., for the LAW Vitrification System were met during the demonstration test, if any such mode was demonstrated.

E. Based on the information provided to Ecology by the Permittees pursuant to Permit Conditions III.10.H.3.d.vi.A through D above, and any additional information, Ecology may provide in writing, direction to the Permittees to stop dangerous and/or mixed waste feed to the LAW Vitrification System and/or amend the mode of operation the Permittees are allowed to continue operations prior to Ecology approval of a compliance schedule and/or revised Demonstration Test Plan pursuant to Permit Conditions III.10.H.3.d.vi.F and G.

F. If the performance standard listed in Permit Condition III.10.H.1.b.i. was not met during the Demonstration Test, the Permittees will submit within one hundred and twenty (120) days of discovery of not meeting the performance standard, a revised Demonstration Test Plan (if appropriate), and a compliance schedule for Ecology approval to address this deficiency. If a revised Demonstration Test Plan is submitted, it will be accompanied by a request for approval to retest as a permit modification pursuant to Permit Conditions III.10.C.2.e. and III.10.C.2.f. The revised Demonstration Test Plan (if submitted) must include substantive changes to prevent failure from reoccurring.

G. If any of the performance standards listed in Permit Condition III.10.H.1.b., with the exception of Permit Conditions III.10.H.1.b.i. or III.10.H.1.b.x., were not met during the Demonstration Test the Permittees will submit to Ecology within one hundred twenty (120) days of discovery of not meeting the performance standard(s), a revised Demonstration Test Plan requesting approval to retest as a permit modification pursuant to Permit Conditions III.10.C.2.e. and III.10.C.2.f. The revised Demonstration Test Plan must include substantive changes to prevent failure from reoccurring.

**III.10.H.3.d.vii** If any calculations or testing results show that any emission rate for any constituent listed in Permit Table III.10.H.E, as approved pursuant to Permit Condition III.10.C.11.b., is exceeded for LAW Vitrification System during the Demonstration Test, the Permittees will perform the following actions:

A. Verbally notify Ecology within twenty-four (24) hours of the discovery of exceeding the emission rate(s) as specified in Permit Condition I.E.21.

B. Submit to Ecology additional risk information to indicate that the increased emissions impact is offset by decreased emission impact from one or more constituents expected to be emitted at the same time, and/or investigate the cause and impact of the exceedance of the emission rate(s) and submit a report of the investigation findings to Ecology within fifteen (15) days of the discovery of exceeding the emission rate(s); and

C. Based on the notification and any additional information, Ecology may provide, in writing, direction to the Permittees to stop dangerous and/or mixed waste feed to the LAW Vitrification System and/or to submit a revised Demonstration Test Plan as a permit modification pursuant to Permit Conditions III.10.C.2.e. and III.10.C.2.f., or III.10.C.2.g. The revised Demonstration Test Plan must include substantive changes to prevent failure from reoccurring.

**III.10.H.4 Post Demonstration Test Period [WAC 173-303-670(5), WAC 173-303-670(6), and WAC 173-303-807(2), in accordance with WAC 173-303-680(2) and (3)].**

**III.10.H.4.a** The Permittees will operate, monitor, and maintain the LAW Vitrification System as specified in Permit Condition III.10.H.1. and Operating Unit Group 10, Appendix 9.15 of this Permit, as approved pursuant to Permit Condition III.10.H.5., except as modified in accordance with Permit Conditions III.10.H.1.b.xii., III.10.H.3., and III.10.H.4.

**III.10.H.4.b** Allowable Waste Feed During the Post-Demonstration Test Period

**III.10.H.4.b.i** The Permittees may feed the dangerous and/or mixed waste specified for the LAW Vitrification System on the Part A Forms (Operating Unit Group 10, Chapter 1 of this Permit), except for those wastes outside the waste acceptance criteria specified in the WAP, Operating Unit Group 10, Chapter 3 of this Permit, as approved pursuant to Permit Condition III.10.C.3., and except Permit Conditions III.10.H.4.b.ii. and III.10.H.4.b.iii. also apply.

**III.10.H.4.b.ii** The dangerous waste and mixed waste feed-rates to the LAW Vitrification System will not exceed the limits in Permit Tables III.10.H.D and F, as approved/modified pursuant to Permit Condition III.10.H.5., or in Permit Condition III.10.H.3

**III.10.H.4.b.iii** The Permittees will conduct sufficient analysis of the dangerous waste and mixed waste treated in LAW Vitrification System to verify that the waste feed is within the physical and chemical composition limits specified in this Permit.

**III.10.H.5 Compliance Schedules**

**III.10.H.5.a** All information identified for submittal to Ecology in a. through f. of this compliance schedule must be signed and certified in accordance with requirements in WAC 173-303-810(12), as modified in accordance with Permit Condition III.10.H.1.a.iii. [WAC 173-303-806(4)].

**III.10.H.5.b** The Permittees will submit to Ecology, pursuant to Permit Condition III. 10.C.9.f., prior to construction of each secondary containment and leak detection system for the LAW Vitrification System (per level) as identified in Permit Tables III.10.H.A and III.10.H.B, engineering information as specified below, for incorporation into Operating Unit Group 10, Appendices 9.2 , 9.4, 9.5, 9.7, 9.8, 9.9, 9.11, and 9.12 of this Permit. At a minimum, engineering information specified below will show the following as described in WAC 173-303-640, in accordance with WAC 173-303-680 (the information specified below will include dimensioned engineering drawings and information on sumps and floor drains):

**III.10.H.5.b.i** IQRPE Reports (specific to foundation, secondary containment, and leak detection system) will include review of design drawings, calculations, and other information on which the certification report is based and will include as applicable, but not limited to, review of such information described below. Information (drawings, specifications, etc.) already included in Operating Unit Group 10, Appendix 9.0 of this Permit, may be included in the report by reference and should include drawing and document numbers. IQRPE Reports will be consistent with the information separately provided in ii. through ix. below [WAC 173-303-640(3)(a), in accordance with WAC 173-303-680 and WAC 173-303-806(4)(i)(i )];

**III.10.H.5.b.ii** Design drawings (General Arrangement Drawings, in plan) and specifications for the foundation, secondary containment including liner installation details, and leak detection methodology. These items should show the dimensions, volume calculations, and location of the secondary containment system, and should include

items such as floor/pipe slopes to sumps, tanks, floor drains [WAC 173-303-640(4)(b) through (f) and WAC 173-303-640(3)(a), in accordance with WAC 173-303-680 and WAC 173-303-806(4)(i)(i)];

**III.10.H.5.b.iii** The Permittees will provide the design criteria (references to codes and standards, load definitions, and load combinations, materials of construction, and analysis/design methodology) and typical design details for the support of the secondary containment system. This information will demonstrate the foundation will be capable of providing support to the secondary containment system, resistance to pressure gradients above and below the system, and capable of preventing failure due to settlement, compression, or uplift [WAC 173-303-640(4)(c)(ii), in accordance with WAC 173-303-680(2) and WAC 173-303-806(4)(i)(i)(B)];

**III.10.H.5.b.iv** A description of materials and equipment used to provide corrosion protection for external metal components in contact with soil, including factors affecting the potential for corrosion [WAC 173-303-640(3)(a)(iii)(B), in accordance with WAC 173-303-680 and WAC 173-303-806(4)(i)(i)(A) through (B)];

**III.10.H.5.b.v** Secondary containment/foundation, and leak detection system, materials selection documentation (including, but not limited to, concrete coatings and water stops, and liner materials) as applicable [WAC 173-303-806(4)(i)(i)(A) through (B)];

**III.10.H.5.b.vi** Detailed description of how the secondary containment for the LAW Vitrification System will be installed in compliance with WAC 173-303-640(3)(c), in accordance with WAC 173-303-680 and WAC 173-303-806(4)(i)(i)(A) through (B);

**III.10.H.5.b.vii** Submit Permit Tables III.10.H.B and III.10.I.B completed to provide for all secondary containment sumps and floor drains the information as specified in each column heading consistent with information to be provided in i. through vi., above;

**III.10.H.5.b.viii** Documentation that secondary containment and leak detection systems will not accumulate hydrogen gas levels above the lower explosive limit for incorporation into the Administrative Record [WAC 173-303-680, WAC 173-303-806(4)(i)(i)(A), and WAC 173-303-806(4)(i)(v)];

**III.10.H.5.b.ix** A detailed description of how LAW Vitrification System design provides access for conducting future LAW Vitrification System integrity assessments [WAC 173-303-640(3)(b) and WAC 173-303-806(4)(i)(i)(B)].

**III.10.H.5.c** The Permittees will submit to Ecology, pursuant to Permit Condition III.10.C.9.f, prior to installation of each sub-system as identified in Permit Table III.10.H.A, engineering information as specified below, for incorporation into Operating Unit Group 10, Appendices 9.1 through 9.14, and 9.17 of this Permit. At a minimum, engineering information specified below will show the following, as required pursuant to WAC 173-303-640, in accordance with WAC 173-303-680 (the information specified below will include dimensioned engineering drawings):

**III.10.H.5.c.i** IQRPE Reports (specific to sub-system) will include review of design drawings, calculations, and other information on which the certification report is based and will include as applicable, but not limited to, review of such information described below. Information (drawings, specifications, etc.) already included in Operating Unit Group 10, Appendix 9.0 of this Permit, may be included in the report by reference and should include drawing and document numbers. The IQRPE Reports will be consistent with the information separately provided in ii. through xii. below, and the

IQRPE Report specified in Permit Condition III.10.H.5.b. [WAC 173-303-640(3)(a), in accordance with WAC 173-303-680(2) and WAC 173-303-806(4)(i)(i)];

**III.10.H.5.c.ii** Design drawings [General Arrangement Drawings in plan and, Process Flow Diagrams, Piping and Instrumentation Diagrams (including pressure control systems), Mechanical Drawings, and specifications, and other information specific to subsystems (to show location and physical attributes of each subsystem)] [WAC 173-303-640(3)(a), in accordance with WAC 173-303-680(2) and WAC 173-303-806(4)(i)(i)];

**III.10.H.5.c.iii** Sub-system design criteria (references to codes and standards, load definitions, and load combinations, materials of construction, and analysis/design methodology) and typical design details to support the subsystems. Structural support calculations specific to off-specification, non-standard and field fabricated subsystems will be submitted for incorporation into the Administrative Record. Documentation will include but not limited to, supporting specifications, test data, treatment effectiveness report, etc. supporting projected operational capability (e.g., WESP projected removal efficiency for individual metals, halogens, particulates, etc.) and compliance with performance standards specified in Permit Condition III.10.H.1.b [WAC 173-303-640(3)(a), in accordance with WAC 173-303-680(2) and WAC 173-303-806(4)(i)(i)(B)];

**III.10.H.5.c.iv** A description of materials and equipment used to provide corrosion protection for external metal components in contact with water, including factors affecting the potential for corrosion [WAC 173-303-640(3)(a)(iii)(B), in accordance with WAC 173-303-680(2) and WAC 173-303-806(4)(i)(i)(A) through (B)];

**III.10.H.5.c.v** Sub-system materials selection documentation (e.g., physical and chemical tolerances) [WAC 173-303-640(3)(a), in accordance with WAC 173-303-680(2) and WAC 173-303-806(4)(i)(i)(A)];

**III.10.H.5.c.vi** Sub-system vendor information (including, but not limited to, required performance warranties, as available), consistent with information submitted under ii. above, will be submitted for incorporation into the Administrative Record [WAC 173-303-640(3)(a), in accordance with WAC 173-303-680(2), WAC 173-303-806(4)(i)(i)(A) through (B), and WAC 173-303-806(4)(i)(v)];

**III.10.H.5.c.vii** System descriptions related to sub-system units will be submitted for incorporation into the Administrative Record [WAC 173-303-680, WAC 173-303-806(4)(i)(i)(A) through (B), and WAC 173-303-806(4)(i)(v)];

**III.10.H.5.c.viii** Mass and energy balance for normal projected operating conditions used in developing the Piping and Instrumentation Diagrams and Process Flow Diagrams, including assumptions and formulas used to complete the mass and energy balance, so that they can be independently verified for incorporation into the Administrative Record [WAC 173-303-680(2), WAC 173-303-806(4)(i)(i)(B), and WAC 173-303-806(4)(i)(v)];

**III.10.H.5.c.ix** Detailed description of all potential LAW Vitrification System bypass events including:

A. A report which includes an analysis of credible potential bypass events and recommendations for prevention/minimization of the potential, impact, and frequency of the bypass event to include at a minimum:

1. Operating procedures
2. Maintenance procedures
3. Redundant equipment
4. Redundant instrumentation
5. Alternate equipment
6. Alternate materials of construction

**III.10.H.5.c.x** A detailed description of how the sub-systems will be installed in compliance with WAC 173-303-640(3)(c), (d), and (e), in accordance with WAC 173-303-680 and WAC 173-303-806(4)(i)(i)(B);

**III.10.H.5.c.xi** Sub-system design to prevent escape of vapors and emissions of acutely or chronically toxic (upon inhalation) EHW, for incorporation into the Administrative Record [WAC 173-303-640(5)(e), in accordance with WAC 173-303-680(2) and WAC 173-303-806(4)(i)(i)(B)];

**III.10.H.5.c.xii** Documentation that sub-systems are designed to prevent the accumulation of hydrogen gases levels above the lower explosive limit for incorporation into the Administrative Record [WAC 173-303-680, WAC 173-303-806(4)(i)(i)(A), and WAC 173-303-806(4)(i)(v)].

**III.10.H.5.d** The Permittees will submit to Ecology, pursuant to Permit Condition III.10.C.9.f, prior to installation of equipment for each sub-system as identified in Permit Tables III.10.H.A and III.10.H.B, not addressed in Permit Conditions III.10.H.5.b. or III.10.H.5.c., engineering information as specified below, for incorporation into Operating Unit Group 10, Appendices 9.1 through 9.14 of this Permit. At a minimum, engineering information specified below will show the following as required pursuant to WAC 173-303-640, in accordance with WAC 173-303-680 (the information specified below will include dimensioned engineering drawings):

**III.10.H.5.d.i** IQRPE Reports (specific to sub-system equipment) will include a review of design drawings, calculations, and other information as applicable on which the certification report is based. The reports will include, but not be limited to, review of such information described below. Information (drawings, specifications, etc.) already included in Operating Unit Group 10, Appendix 9.0 of this Permit, may be included in the report by reference and should include drawing and document numbers. The IQRPE Reports will be consistent with the information provided separately in ii. through xiii. below and the IQRPE Reports specified in Permit Conditions III.10.H.5.b. and III.10.H.5.c. [WAC 173-303-640(3)(a), in accordance with WAC 173-303-680(2) and WAC 173-303-806(4)(i)(i)(A) through (B)];

**III.10.H.5.d.ii** Design drawings [Process Flow Diagrams, Piping and Instrumentation Diagrams (including pressure control systems), specifications and other information specific to equipment (these drawings should include all equipment such as pipes, valves, fittings, pumps, instruments, etc.)] [WAC 173-303-640(3)(a), in accordance with WAC 173-303-680(2) and WAC 173-303-806(4)(i)(i)(A) through (B)];

**III.10.H.5.d.iii** Sub-system equipment design criteria (references to codes and standards, load definitions, and load combinations, materials of construction, and analysis/design methodology) and typical design details for the support of the sub-system equipment [WAC 173-303-640(3)(a) and WAC 173-303-640(3)(f), in accordance with WAC 173-303-680 and WAC 173-303-806(4)(i)(i)(B)];

**III.10.H.5.d.iv** A description of materials and equipment used to provide corrosion protection for external metal components in contact with soil and water, including factors affecting the potential for corrosion [WAC 173-303-640(3)(a)(iii)(B), in accordance with WAC 173-303-680(2) and WAC 173-303-806(4)(i)(i)(A)];

**III.10.H.5.d.v** Materials selection documentation for equipment for each sub-system (e.g., physical and chemical tolerances) [WAC 173-303-640(3)(a), in accordance with WAC 173-303-680(2) and WAC 173-303-806(4)(i)(i)(A)];

**III.10.H.5.d.vi** Vendor information (including, but not limited to, required performance warranties, as available), consistent with information submitted under ii. above, for sub-system equipment will be submitted for incorporation into the Administrative Record. [WAC 173-303-640(3)(a), in accordance with WAC 173-303-680(2), WAC 173-303-806(4)(i)(i)(A) through (B), and WAC 173-303-806(4)(i)(iv)];

**III.10.H.5.d.vii** Sub-system, sub-system equipment, and leak detection system instrument control logic narrative description (e.g., descriptions of fail-safe conditions, etc.) [WAC 173-303-680(2), WAC 173-303-806(4)(i)(i)(B), and WAC 173-303-806(4)(i)(v)].

**III.10.H.5.d.viii** System description related to sub-system equipment, and system descriptions related to leak detection systems, for incorporation into the Administrative Record [WAC 173-303-680, WAC 173-303-806(4)(i)(i)(A) through (B), and WAC 173-303-806(4)(i)(v)];

**III.10.H.5.d.ix** A detailed description of how the sub-system equipment will be installed and tested [WAC 173-303-640(3)(c) through (e), WAC 173-303-640(4)(b) and (c), in accordance with WAC 173-303-680 and WAC 173-303-806(4)(i)(i)(B)];

**III.10.H.5.d.x** For process monitoring, control, and leak detection system instrumentation for the LAW Vitrification System as identified in Permit Tables III.10.H.C. and III.10.H. F., a detailed description of how the process monitoring, control, and leak detection system instrumentation, will be installed and tested [WAC 173-303-640(3)(c) through (e), WAC 173-303-640(4)(b) and (c), WAC 173-303-806(4)(c)(vi), and WAC 173-303-806(4)(i)(i)(B)];

**III.10.H.5.d.xi** Mass and energy balance for projected normal operating conditions used in developing the Piping and Instrumentation Diagrams and Process Flow Diagrams, including assumptions and formulas used to complete the mass and energy balance, so that they can be independently verified, for incorporation into the Administrative Record [WAC 173-303-680(2), WAC 173-303-806(4)(i)(i)(B), and WAC 173-303-806(4)(i)(v)];

**III.10.H.5.d.xii** Documentation that sub-systems equipment are designed to prevent the accumulation of hydrogen gas levels above the lower explosive limit for incorporation into the Administrative Record [WAC 173-303-680, WAC 173-303-806(4)(i)(i)(A), and WAC 173-303-806(4)(i)(v)];

**III.10.H.5.d.xiii** Leak detection system documentation (e.g. vendor information, etc.) consistent with information submitted under Permit Condition III.10.H.5.c.ii. and Permit Conditions III.10.H.5.d.ii., vii., viii., and x. above, will be submitted for incorporation into the Administrative Record.

**III.10.H.5.e** Prior to initial receipt of dangerous and/or mixed waste in the WTP Unit, the Permittees will submit to Ecology, pursuant to Permit Condition III.10.C.9.f., the following as specified below for incorporation into Operating Unit Group 10, Appendix 9.18 of this

Permit, except Permit Condition III.10.H.5.e.i., which will be incorporated into Operating Unit Group 10, Chapter 6 of this Permit. All information provided under this permit condition must be consistent with information provided pursuant to Permit Conditions III.10.H.5.b., c., d., e., and f., III.10.C.3.e. and III.10.C.11.b., as approved by Ecology:

**III.10.H.5.e.i** Integrity assessment program and schedule for the LAW Vitrification System will address the conducting of periodic integrity assessments on the LAW Vitrification System over the life of the system, as specified in Permit Condition III.10.H.5.b.ix. and WAC 173-303-640(3)(b), in accordance with WAC 173-303-680, and descriptions of procedures for addressing problems detected during integrity assessments. The schedule must be based on past integrity assessments, age of the system, materials of construction, characteristics of the waste, and any other relevant factors [WAC 173-303-640(3)(b), in accordance with WAC 173-303-680 and WAC 173-303-806(4)(i)(i)(B)].

**III.10.H.5.e.ii** Detailed plans and descriptions, demonstrating the leak detection system is operated so that it will detect the failure of either the primary or secondary containment structure or the presence of any release of dangerous and/or mixed waste or accumulated liquid in the secondary containment system within twenty-four (24) hours [WAC 173-303-640(4)(c)(iii)]. Detection of a leak of at least 0.1 gallons per hour within twenty-four (24) hours is defined as being able to detect a leak within twenty-four (24) hours. Any exceptions to this criteria must be approved by Ecology in accordance with WAC 173-303-680, WAC 173-303-640(4)(c)(iii), and WAC 173-303-806(4)(i)(i)(b).

A. Dangerous waste pipe penetrations that require a penetration seal in accordance with the International Building Code (IBC) and DOE-STD-1066, DOE Standard for Fire Protection Design Criteria, or meet ventilation sealing requirements identified in Table III.10.H.G, are not required to meet the 0.1 gallons per hour within twenty-four (24) hours leak detection rate for those sections of piping that are in contact with approved silicone or equivalent low-permeability seal material.

B. Piping on either side of the penetration seal must meet the requirements of III.10.H.5.e.ii.

C. Revisions (including additions or deletions) to Table III.10.H.G will be submitted to Ecology for review and approval pursuant to Conditions III.10.C.2.e and III.10.C.2.f. Addition of penetration seal locations to Table III.10.H.G. will be approved by Ecology prior to installation of the penetration seal.

**Table III.10.H.G LAW Plant Penetration Seal Location**

| Row Number | Room Number | Orientation | Discipline | Sequence Number |
|---|---|---|---|---|
| **1.** | L0000112 | E | PD | 02097 |
| **2.** | L0000123 | E | PD | 01823 |
| **3.** | L0000123 | E | PD | 01834 |
| **4.** | L0000123 | E | PD | 01828 |
| **5.** | L0000123 | E | PD | 01837 |
| **6.** | L0000123 | E | PD | 01822 |
| **7.** | L0000123 | E | PD | 01824 |

| Row Number | Room Number | Orientation | Discipline | Sequence Number |
|---|---|---|---|---|
| **8.** | L0000123 | E | PD | 01826 |
| **9.** | L0000123 | E | PD | 01821 |
| **10.** | L0000123 | E | PD | 01825 |
| **11.** | L0000123 | E | PD | 01827 |
| **12.** | L0000123 | E | PD | 01836 |
| **13.** | L0000123 | E | PD | 01820 |
| **14.** | L0000123 | E | PD | 01832 |
| **15.** | L0000123 | S | PD | 01797 |
| **16.** | L0000124 | E | PD | 01843 |
| **17.** | L0000124 | E | PD | 01844 |
| **18.** | L0000124 | E | PD | 01845 |
| **19.** | L0000124 | E | PD | 01842 |
| **20.** | L0000124 | E | PD | 01847 |
| **21.** | L0000124 | E | PD | 01841 |
| **22.** | L0000124 | E | PD | 01846 |
| **23.** | L0000124 | E | PD | 01850 |
| **24.** | L0000124 | E | PD | 01848 |
| **25.** | L0000124 | E | PD | 01852 |
| **26.** | L0000124 | E | PD | 01840 |
| **27.** | L0000124 | E | PD | 01839 |
| **28.** | L0000124 | E | PD | 01849 |
| **29.** | L0000124 | S | PD | 01801 |
| **30.** | L0000125 | E | PD | 01858 |
| **31.** | L0000125 | E | PD | 01859 |
| **32.** | L0000125 | E | PD | 01860 |
| **33.** | L0000125 | E | PD | 01857 |
| **34.** | L0000125 | E | PD | 01862 |
| **35.** | L0000125 | E | PD | 01856 |
| **36.** | L0000125 | E | PD | 01861 |
| **37.** | L0000125 | E | PD | 01865 |
| **38.** | L0000125 | E | PD | 01863 |
| **39.** | L0000125 | E | PD | 01867 |
| **40.** | L0000125 | E | PD | 01855 |
| **41.** | L0000125 | E | PD | 01854 |
| **42.** | L0000125 | E | PD | 01864 |
| **43.** | L0000126 | S | PD | 01807 |
| **44.** | L0000201 | F | PD | 02405 |
| **45.** | L0000201 | S | PD | 02406 |
| **46.** | L0000202 | F | PD | 02495 |

| Row Number | Room Number | Orientation | Discipline | Sequence Number |
|---|---|---|---|---|
| **47.** | L0000216 | W | PD | 02674 |
| **48.** | L0000220 | E | PD | 02709 |
| **49.** | L0000301 | F | PD | 03319 |
| **50.** | L0000301 | S | PD | 03437 |
| **51.** | L0000301 | S | PD | 04149 |
| **52.** | L0000301 | S | PD | 04141 |
| **53.** | L000101A | F | PD | 01291 |
| **54.** | L000101A | F | PD | 01292 |
| **55.** | L000101A | W | PD | 01971 |
| **56.** | L000226B | F | PD | 02445 |
| **57.** | L000226B | F | PD | 02444 |
| **58.** | L000304F | F | PD | 03278 |
| **59.** | L000304F | F | PD | 03277 |
| **60.** | LB00001B | E | EQ | 80908 |
| **61.** | LB00001B | S | PD | 00196 |
| **62.** | LB00001B | S | PD | 00201 |
| **63.** | LC000201 | F | PD | 02430 |

**III.10.H.5.e.iii** Detailed operational plans and descriptions, demonstrating that spilled or leaked waste and accumulated liquids can be removed from the secondary containment system within twenty-four (24) hours [WAC 173-303-806(4)(i)(i)(B)].

**III.10.H.5.e.iv** Descriptions of operational procedures demonstrating appropriate controls and practices are in place to prevent spills and overflows from the LAW Vitrification System or containment systems in compliance with WAC 173-303-640(5)(b)(i) through (iii), in accordance with WAC 173-303-680 and WAC 173-303-806(4)(i)(i)(B);

**III.10.H.5.e.v** Description of procedures for investigation and repair of the LAW Vitrification System [WAC 173-303–640(6) and WAC 173-303-640(7)(e) and (f), in accordance with WAC 173-303-680, WAC 173-303-320, WAC 173-303-806(4)(a)(v), and WAC 173-303-806(4)(a)(ii)(B)].

**III.10.H.5.e.vi** Updated Chapter 4, Narrative Description, Tables and Figures as identified in Permit Tables III.10.H.A and III.10.H.B, as modified pursuant to Permit Condition III.10.H.5.e.x. and updated to identify routinely non-accessible LAW Vitrification sub-systems.

**III.10.H.5.e.vii** Description of procedures for management of ignitable and reactive, and incompatible dangerous and/or mixed waste as specified in WAC 173-303-640(9) and (10), in accordance with WAC 173-303-680 and WAC 173-303-806(4)(i)(i)(B).

**III.10.H.5.e.viii** A description of the tracking system used to track dangerous and/or mixed waste generated throughout the LAW Vitrification system, pursuant to WAC 173-303-380.

**III.10.H.5.e.ix** Permit Tables III.10.H.C and III.10.I.C will be completed for LAW Vitrification System process and leak detection system monitors and instruments (to include, but not be limited to: instruments and monitors measuring and/or controlling flow,

pressure, temperature, density, pH, level, humidity, and emissions) to provide the information as specified in each column heading. Process and leak detection system monitors and instruments for critical systems as specified in Operating Unit Group 10, Appendix 2.0 and as updated pursuant to Permit Condition III.10.C.9.b., and for operating parameters as required to comply with Permit Condition III.10.C.3.e.iii. will be addressed. Process monitors and instruments for non-waste management operations (e.g., utilities, raw chemical storage, non-contact cooling waters, etc.) are excluded from this permit condition [WAC 173-303-680, WAC 173-303-806(4)(i)(i)(A) through (B), and WAC 173-303-806(4)(i)(v)];

**III.10.H.5.e.x** Permit Tables III.10.H.A and III.10.I.A amended as follows [WAC 173-303-680 and WAC 173-303-806(4)(i)(i)(A) through (B)]:

A. Under column 1, update and complete list of dangerous and mixed waste LAW Vitrification System sub-systems, including plant items that comprise each system (listed by item number).

B. Under column 2, update and complete system designations.

C. Under column 3, replace the 'Reserved' with Operating Unit Group 10, Appendix 9.0 subsections (e.g., 9.1, 9.2, etc.) designated in Permit Conditions III.10.H.5.b., c., and d. specific to LAW Vitrification System sub-system as listed in column 1.

D. Under column 4, update and complete list of narrative description, tables, and figures.

**III.10.H.5.e.xi** The permittees will incorporate operational parameters/controls required for the underground transfer line LCP-PB-03368-S32B-03 in the operating permit prior to the transfer of waste from the Effluent Management Facility evaporator system to the LAW Facility (LCP-VSL-00001/2). The operational controls will meet the mitigating requirements provided in the Design Guide Case-Specific Exception (DGCE) (number 24590-BOF-DGCE-MS-16-00022) dated 28 February 2017.

**III.10.H.5.f** One hundred and eighty (180) days prior to initial receipt of dangerous and/or mixed waste in the WTP Unit, the Permittees will submit for review and receive approval for incorporation into Operating Unit Group 10, Appendix 9.15 of this Permit, a Demonstration Test Plan for the LAW Vitrification System to demonstrate that the LAW Vitrification Systems meets the performance standards specified in Permit Condition III.10.H.1.b. In order to incorporate the Demonstration Test Plan for the LAW Vitrification System into Operating Unit Group 10, Appendix 9.15, Permit Condition III.10.C.2.g. process will be followed. The Demonstration Test Plan will include, but not be limited to, the following information. The Demonstration Test Plan will also be consistent with the information provided pursuant to Permit Conditions III.10.H.5.b., c., d., and e., III.10.C.3.e., and III.10.C.11.b., as approved by Ecology and consistent with the schedule described in Operating Unit Group 10, Appendix 1.0 of this Permit. The documentation required pursuant to Permit Condition III.10.H.5.f.x., in addition to being incorporated into Operating Unit Group 10, Appendix 9.15, will be incorporated by reference in Operating Unit Group 10, Chapter 6 of this Permit.

*Notes: (1) The following should be consulted to prepare this Demonstration Test Plan: "Guidance on Setting Permit Conditions and Reporting Trial Burn Results Volume II of the Hazardous Waste Incineration Guidance Series," (EPA/625/6-89/019) and Risk Burn Guidance For Hazardous Waste Combustion Facilities," (EPA-R-01-001, July 2001),*

*WAC 173-303-807(2), WAC 173-303-670(5), WAC-173-303-670(6), 40 CFR §63.1207(f)(2), 40 CFR §63.1209, and Appendix to 40 CFR Part 63 EEE.*

*(2) Cross-referencing to the information provided pursuant to permit Conditions III.H.5.b., c., d., e., and III.10.C.3.e.v., as approved by Ecology, that are redundant to elements of the Demonstration Test Plan for the LAW Vitrification System is acceptable.*

**III.10.H.5.f.i** Analysis of each feed-stream to be fed during the demonstration test, including dangerous waste, glass formers and reductants, process streams (e.g., volumes of air leakage including control air, process air, steam, sparge bubbler air, air in-leakage from melter cave, and gases from LAW Vitrification Vessel Ventilation System, process water, etc.) that includes:

A. Levels of ash, metals, total chlorine (organic and inorganic), other halogens and radionuclide surrogates.

B. Description of the physical form of the feed-streams.

C. An identification and quantification of organics that are present in the feed-stream, including constituents proposed for DRE demonstration.

A comparison of the proposed demonstration test feed streams to the mixed waste feed envelopes to be processed in the melters must be provided that documents that the proposed demonstration test feed streams will serve as worst case surrogates for organic destruction, formation of products of incomplete oxidation, and metals, total chlorine (organic and inorganic), other halogens, particulate formation, and radionuclides.

**III.10.H.5.f.ii** Specification of trial principal organic dangerous constituents (PODCs) for which destruction and removal efficiencies are proposed to be calculated during the demonstration test and for inclusion in Permit Conditions III.10.H.1.b.i. and III.10.I.1.b.i. These trial PODCs will be specified based on destructibility, concentration or mass in the waste and the dangerous waste constituents or constituents in WAC 173-303-9905;

**III.10.H.5.f.iii** A description of the blending procedures, prior to introducing the feed-streams into the melter, including analysis of the materials prior to blending, and blending ratios;

**III.10.H.5.f.iv** A description of how the surrogate feeds are to be introduced for the demonstration. This description should clearly identify the differences and justify how any of differences would impact the surrogate feed introduction as representative of how mixed waste feeds will be introduced;

**III.10.H.5.f.v** A detailed engineering description of the LAW Vitrification System, including:

A. Manufacturer's name and model number for each sub-system.

B. Design capacity of each sub-system including documentation (engineering calculations, manufacturer/vendor specifications, operating data, etc.) supporting projected operational efficiencies (e.g., WESP projected removal efficiency for individual metals, halogens, particulates, etc.) and compliance with performance standards specified in Permit Condition III.10.H.1.b.

C. Detailed scaled engineering drawings, including Process Flow Diagrams, Piping and Instrumentation Diagrams, Vessel Drawings (plan, and elevation with cross sections) and General Arrangement Drawings.

D. Process Engineering Descriptions.

E. Mass and energy balance for each projected operating condition and each demonstration test condition, including assumptions and formulas used to complete the mass and energy balance, so that they can be independently verified for incorporation into the Administrative Record.

F. Engineering Specifications/data sheets (materials of construction, physical and chemical tolerances of equipment, and fan curves).

G. Detailed Description of Automatic Waste Feed Cutoff System addressing critical operating parameters for all performance standards specified in Permit Condition III.10.H.1.b.

H. Documentation to support compliance with performance standards specified in Permit Condition III.10.H.1.b., including engineering calculations, test data, and manufacturer/vendor's warranties, etc..

I. Detailed description of the design, operation, and maintenance practices for air pollution control system.

J. Detailed description of the design, operation, and maintenance practices of any stack gas monitoring and pollution control monitoring system.

**III.10.H.5.f.vi** Detailed description of sampling and monitoring procedures including sampling and monitoring locations in the system, the equipment to be used, sampling and monitoring frequency, and planned analytical procedures for sample analysis including, but not limited to:

A. A short summary narrative description of each stack sample method should be included within the main body of the demonstration test plan, which references an appendix to the plan that would include for each sampling train: (1) detailed sample method procedures, (2) sampling train configuration schematic, (3) sampling recovery flow sheet, (4) detailed analytical method procedures, and (5) sampling preparation and analysis flow sheet. The detailed procedures should clearly flag where the method has provided decision points (e.g., choices of equipment materials of construction, choices of clean-up procedures or whether additional clean-up procedures will be incorporated, whether pretest surveys or laboratory validation work will be performed, enhancements to train to accommodate high moisture content in stack gas, etc.) and what is being proposed along with the basis for the decision.

B. A short summary narrative description of the feed and residue sampling methods should be included within the main body of the demonstration test plan, which references an appendix that would include for each sample type: (1) detailed sample method procedures, (2) sampling recovery/compositing procedures, and (3) detailed analytical method procedures. The detailed procedures should clearly flag where the method has provided decision points (e.g., choices of equipment materials of construction, choices of clean-up procedures or whether additional clean-up procedures will be incorporated, whether pretest surveys or laboratory validation work will be performed, etc.) and what is being proposed along with the basis for the decision.

**III.10.H.5.f.vii** A detailed test schedule for each condition for which the demonstration test is planned, including projected date(s), duration, quantity of dangerous waste to be fed, and other relevant factors.

**III.10.H.5.f.viii** A detailed test protocol including, for each test condition, the ranges of feed-rate for each feed system, and all other relevant parameters that may affect the ability of the

LAW Vitrification System to meet performance standards specified in Permit Condition III.10.H.1.b.

**III.10.H.5.f.ix** A detailed description of planned operating conditions for each demonstration test condition, including operating conditions for shakedown, demonstration test, post-demonstration test and normal operations. This information will also include submittal of Permit Tables III.10.H.D, III.10.H.F, III.10.I.D, and III.10.I.F completed with the information as specified in each column heading for each LAW Vitrification System waste feed cutoff parameter and submittal of supporting documentation for Permit Tables III.10.H.D, III.10.H.F, III.10.I.D, and III.10.I.F set-point values.

**III.10.H.5.f.x** The test conditions proposed must demonstrate meeting the performance standards specified in Permit Condition III.10.H.1.b. with the simultaneous operation of both melters at capacity and input from the LAW Vitrification Vessel Ventilation System at capacity to simulate maximum loading to the LAW Vitrification System off-gas treatment system and to establish the corresponding operating parameter ranges. To the extent that operation of one (1) melter or two (2) melters cannot be sustained within the operating parameter range established at this maximum load, additional demonstration test conditions must be included in the plan and performed to establish operating parameter ranges for each proposed operating mode while demonstrating meeting the performance standards specified in Permit Condition III.10.H.1.b..

**III.10.H.5.f.xi** Detailed description of procedures for start-up and shutdown of waste feed and controlling emissions in the event of an equipment malfunction, including off-normal and emergency shutdown procedures.

**III.10.H.5.f.xii** A calculation of waste residence time.

**III.10.H.5.f.xiii** Any request to extrapolate metal feed-rate limits from Demonstration Test levels must include:

A. A description of the extrapolation methodology and rationale for how the approach ensures compliance with the performance standards as specified in Permit Condition III.10.H.1.b.

B. Documentation of the historical range of normal metal feed-rates for each feed stream.

C. Documentation that the level of spiking recommended during the demonstration test will mask sampling and analysis imprecision and inaccuracy to the extent that extrapolation of feed-rates and emission rates from the Demonstration Test data will be as accurate and precise as if full spiking were used.

**III.10.H.5.f.xiv** Documentation of the expected levels of constituents in LAW Vitrification System input streams including, but not limited to, waste feed, glass former and reactants, control air, process air, steam, sparge bubbler air, air in-Leakage from melter cave, gases from LAW Vitrification Vessel Ventilation System, and process water.

**III.10.H.5.f.xv** Documentation justifying the duration of the conditioning required to ensure the LAW Vitrification System had achieved steady-state operations under Demonstration Test operating conditions.

**III.10.H.5.f.xvi** Documentation of LAW Vitrification System process and leak detection system instruments and monitors as listed on Permit Tables III.10.H.C, III.10.H.F, III.10.I.C, and III.10.I.F to include:

A. Procurement specifications.

B. Location used.

C. Range, precision, and accuracy.

D. Detailed descriptions of calibration/functionality test procedures (either method number ASTM) or provide a copy of manufacturer's recommended calibration procedures.

E. Calibration/functionality test, inspection, and routine maintenance schedules and checklists, including justification for calibration, inspection and maintenance frequencies, criteria for identifying instruments found to be significantly out of calibration, and corrective action to be taken for instruments found to be significantly out of calibration (e.g., increasing frequency of calibration, instrument replacement, etc.).

F. Equipment instrument control logic narrative description (e.g., descriptions of failsafe conditions, etc.) [WAC 173-303-680(2), WAC 173-303-806(4)(i)(i)(B), and WAC 173-303-806(4)(i)(v)].

**III.10.H.5.f.xvii** Outline of demonstration test report.

**Table III.10.H.A - LAW Plant Miscellaneous Unit System Description**

| Sub-system Description | Sub-system Designation | Engineering Description (Drawing Nos., Specification Nos., etc.) | Narrative Description, Tables and Figures |
|---|---|---|---|
| **LAW Melter Process System**<br>LMP-MLTR-00001 (LAW Melter 1)<br>LMP-MLTR-00002 (LAW Melter 2) | LMP | **24590-LAW**<br>-CM-HC4-HXYG-00240-02-00014. Rev/ -<br>-M0D-LMP-00001, Rev. 3<br>-M0D-LMP-00002, Rev. 3<br>-M6-LMP-00001001, Rev 0<br>-M6-LMP-00002001, Rev 0<br>-M6-LMP-00002002, Rev 0<br>-M6-LMP-00031001, Rev 0<br>-M6-LMP-00032001, Rev 0<br>-M6-LMP-00032002, Rev 0<br>-MF-LMP-00001, Rev. 0<br>-MF-LMP-00002, Rev. 0<br>-MF-LMP-00003, Rev. 0<br>-MF-LMP-00004, Rev. 0<br>-3PS-AE00-T0001, Rev. 6<br>-3PN-LMP-00002<br>-N1D-LMP-00001, Rev. 1<br>-P1-P01T-00002, Rev 7 | Section 4E.2.2, Table 4E-2, and Figures 4A-1, 4A-3 and 4A-21 in Operating Unit Group 10, Chapter 4 of this Permit. |
| **LAW Primary Offgas Process System**<br>LOP-FCLR-00001 (Melter 1 Primary Film Cooler)<br>LOP-FCLR-00002 (Melter 1 Standby Film Cooler No. 2)<br>LOP-FCLR-00003 (Melter 2 Primary Film Cooler) | LOP | **24590-LAW**<br>-P1-P01T-00002, Rev 7<br>-M6-LOP-00004001, Rev 0<br>-M6-LOP-00004002, Rev 0<br>-M6-LOP-00005001, Rev 0<br>-M6-LOP-00005002, Rev 0 | Section 4E.4.2.1, Table 4E-2, and Figures 4A-1, 4A-3 and 4A-21 in Operating Unit Group 10, Chapter 4 of this Permit. |

**Table III.10.H.A - LAW Plant Miscellaneous Unit System Description**

| Sub-system Description | Sub-system Designation | Engineering Description (Drawing Nos., Specification Nos., etc.) | Narrative Description, Tables and Figures |
|---|---|---|---|
| LOP-FCLR-00004 (Melter 2 Standby Film Cooler) | | | |
| **LAW Primary Offgas Process System (Cont.)**<br>LOP-SCB-00001 (Melter 1 Submerged Bed Scrubber)<br>LOP-SCB-00002 (Melter 2 Submergered Bed Scrubber) | LOP | **24590-LAW**<br>-M5-V17T-P0007, Rev 0<br>-M5-V17T-P0008, Rev 0<br>-M6-LOP-00001001, Rev 0<br>-M6-LOP-00002001, Rev 0<br>-MK-LOP-P0001001, Rev 0<br>-MK-LOP-P0001002, Rev 0<br>-MK-LOP-P0001003, Rev 0<br>-MKD-LOP-P0008, Rev 0<br>-NID-LOP-P0001, Rev 1<br>-P1-P01T-00002, Rev 7 | Section 4E.4.2.1, Table 4E-2, and Figures 4A-1 and 4A-3 in Operating Unit Group 10, Chapter 4 of this Permit. |
| **LAW Primary Offgas Process System (Cont.)**<br>LOP-WESP-00001 (Melter 1 Wet Electrostatic Precipitator - WESP)<br>LOP-WESP-00002 (Melter 2 Wet Electrostatic Precipitator -WESP) | LOP | **24590-LAW**<br>-M5-V17T-P0007, Rev 0<br>-M5-V17T-P0008, Rev 0<br>-M6-LOP-00001004, Rev 1<br>-M6-LOP-00002004, Rev 1<br>-NID-LOP-00003, Rev 3<br>-P1-P01T-00002, Rev 7<br>**24590-WTP**<br>-3PS-MKE0-T0001, Rev 5 | Section 4E.4.2.1, Table 4E-2, and Figures 4A-1 and 4A-3 in Operating Unit Group 10, Chapter 4 of this Permit. |
| **LAW Secondary Offgas/Vessel Vent Process System**<br>LVP-HEPA-00001A (Melter Offgas HEPA Filter) | LVP | **24590-LAW**<br>-M5-V17T-00010, Rev 4<br>-M6-LVP-00001003, Rev 0 | Section 4E.4.2.2, Table 4E-2, Figures 4A-1 and 4A-3 in Operating Unit Group 10, Chapter 4 of this Permit. |

**Table III.10.H.A - LAW Plant Miscellaneous Unit System Description**

| Sub-system Description | Sub-system Designation | Engineering Description (Drawing Nos., Specification Nos., etc.) | Narrative Description, Tables and Figures |
|---|---|---|---|
| LVP-HEPA-00001B (Melter Offgas HEPA Filter)<br>LVP-HEPA-00002A (Melter Offgas HEPA Filter)<br>LVP-HEPA-00002B (Melter Offgas HEPA Filter)<br>LVP-HEPA-00003A (Melter Offgas HEPA Filter) | | -P1-P01T-00005, Rev 6 | |
| **LAW Secondary Offgas/Vessel Vent Process System (Cont.)**<br>LVP-SCO-00001 (Thermal Catalytic Oxidizer – located on LVP-SKID-00002) | LVP | **24590-LAW**<br>-M6-LVP-00005002, Rev 3 | Section 4E.4.2.2, Table 4E-2, Figures 4A-1 and 4A-3 in Operating Unit Group 10, Chapter 4 of this Permit. |
| **LAW Secondary Offgas/Vessel Vent Process System (Cont.)**<br>LVP-SCR-00001 (NOx Selective Catalytic Reduction Unit – located on LVP-SKID-00002)<br>LVP-HX-00001 (Catalytic Oxidizer Heat Exchanger – located on LVP-SKID-00002)<br>LVP-HTR-00002 (Catalytic Oxidizer Electric Heater – located on LVP-SKID-00002) | LVP | **24590-LAW**<br>-M6-LVP-00005002, Rev 3 | Section 4E.4.2.2, Table 4E-2, and Figures 4A-1 and 4A-3 in Operating Unit Group 10, Chapter 4 of this Permit. |
| **LAW Secondary Offgas/Vessel Vent Process System (Cont.)**<br>LVP-ADBR-00001A (Offgas Mercury Adsorber – located on LVP-SKID-00001)<br>LVP-ADBR-00001B (Offgas Mercury Adsorber – located on LVP-SKID-00001) | LVP | **24590-LAW**<br>-M5-V17T-00011, Rev 6<br>-M6-LVP-00004003, Rev 1<br>-P1-P01T-00005, Rev 6 | Section 4E.4.2.2, Table 4E-2, and Figures 4A-1 and 4A-3 in Operating Unit Group 10, Chapter 4 of this Permit. |

**Table III.10.H.A - LAW Plant Miscellaneous Unit System Description**

| Sub-system Description | Sub-system Designation | Engineering Description (Drawing Nos., Specification Nos., etc.) | Narrative Description, Tables and Figures |
|---|---|---|---|
| **LAW Secondary Offgas/Vessel Vent Process System (Cont.)**<br>LVP-SCB-00001 (Melter Offgas Caustic Scrubber) | LVP | **24590-LAW**<br>-P1-P01T-00005, Rev 6<br>-M6-LVP-00002002, Rev 0 | Section 4E.4.2.2, Table 4E-2, and Figures 4A-1 and 4A-3 in Operating Unit Group 10, Chapter 4 of this Permit. |
| **LAW Secondary Offgas/Vessel Vent Process System (Cont.)**<br>LVP-HTR-00001A (Melter Offgas HEPA Preheater)<br>LVP-HTR-00001B (Melter Offgas HEPA Preheater) | LVP | **24590-LAW**<br>-M5-V17T-00010, Rev 4<br>-M6-LVP-00001002, Rev 0<br>-P1-P01T-00005, Rev. 6 | Section 4E.4.2.2, Table 4E-2, and Figures 4A-1 and 4A-3 in Operating Unit Group 10, Chapter 4 of this Permit. |
| **LAW Secondary Offgas/Vessel Vent Process System (Cont.)**<br>LVP-EXHR-00001A (Melter Offgas Exhauster)<br>LVP-EXHR-00001B (Melter Offgas Exhauster)<br>LVP-EXHR-00001C (Melter Offgas Exhauster) | LVP | **24590-LAW**<br>-M5-V17T-00010, Rev 4<br>-M6-LVP-00001004, Rev 0<br>-M6-LVP-00001005, Rev 0<br>-M6-LVP-00001006, Rev 0<br>-P1-P01T-00005, Rev 6 | Section 4E.4.2.2, Table 4E-2, and Figures 4A-1 and 4A-3 in Operating Unit Group 10, Chapter 4 of this Permit. |

**Table III.10.H.B - LAW Vitrification Miscellaneous Unit System Secondary Containment Sumps and Floor Drains**

| Sump/Floor Drain I.D.# & Room Location | Maximum Sump Capacity (gallons) | Sump Dimensions[a] (feet) & Materials of Construction | Engineering Description (Drawing Nos., Specification Nos., etc.) |
|---|---|---|---|
| RLD-SUMP-00029<br>L-0123 (Process Cell, El. +3') | 37 | 30" Dia. By 12" deep<br>Stainless Steel (6% Mo) | **24590-LAW**<br>-M6-RLD-00003002, Rev 2<br>-P1-P01T-00002 |
| RLD-SUMP-00030<br>L-0123 (Process Cell, El. +3') | 37 | 30" Dia. By 12" deep<br>Stainless Steel (6% Mo) | **24590-LAW**<br>-M6-RLD-00003002, Rev 2<br>-P1-P01T-00002 |
| RLD-SUMP-00031<br>L-0124 (Process Cell Sump, El. +3') | 37 | 30" Dia. By 12" deep<br>Stainless Steel (6% Mo) | **24590-LAW**<br>-M6-RLD-00003002, Rev 2<br>-P1-P01T-00002 |
| RLD-SUMP-00032<br>L-0124 (Process Cell, El. +3') | 37 | 30" Dia. By 12" deep<br>Stainless Steel (6% Mo) | **24590-LAW**<br>-M6-RLD-00003002, Rev 2<br>-P1-P01T-00002 |
| LOP-FD-00001<br>L-0123 (LOP-BULGE-00001 Drain El. +3') | N/A | 2" Dia.<br>6% Mo | **24590-LAW**<br>-M6-LOP-00001003 |
| RLD-WS-20037-S11B-01<br>L-0123 (Melter 1 Encasement Assembly Drain, El. +3') | N/A | 1" Dia.<br>316L | **24590-LAW**<br>-M6-LMP-00012001 |
| LOP-FD-00002<br>L-0124 (LOP-BULGE-00002 Drain, El. +3') | N/A | 2" Dia.<br>6% Mo | **24590-LAW**<br>-M6-LOP-00002003 |
| RLD-WS-20033-S11B-01<br>L-0124 (Melter 2 Encasement Assembly Drain, El. +3') | N/A | 1" Dia.<br>316L | **24590-LAW**<br>-M6-LMP-00042001 |
| RLD-FD-00025<br>L-0304F (Curb Floor Drain for Caustic Scrubber, El. 48') | N/A | 4" Dia.<br>316L | **24590-LAW**<br>-M6-RLD-00003001 |

**Table III.10.H.B - LAW Vitrification Miscellaneous Unit System Secondary Containment Sumps and Floor Drains**

| Sump/Floor Drain I.D.# & Room Location | Maximum Sump Capacity (gallons) | Sump Dimensions[a] (feet) & Materials of Construction | Engineering Description (Drawing Nos., Specification Nos., etc.) |
|---|---|---|---|
| [a]Dimensions listed are based on permitted design. Actual dimensions may vary within acceptable design tolerances. | | | |

1

**Table III.10.H.C - LAW Vitrification System Process and Leak Detection System Instruments and Parameters**

| Sub-system Locator and Name (including P&ID) | Control Parameter | Type of Measuring or Leak Detection Instrument | Location of Measuring Instrument (Tag No.) | Instrument Range | Failure State | Expected Range | Instrument Accuracy | Instrument Calibration Method No. and Range |
|---|---|---|---|---|---|---|---|---|
| 24590-LAW-M6-LMP-00005001 | Melter 1 Plenum Temperature Average | Temperature Element | TE-1267C, 1272C, 1280C | TBD | TBD | TBD | TBD | TBD |
| | | Temperature Transmitter | TT-1267B | | | | | |
| | | Temperature Indicator | TI-1267C, 1272C, 1280C | | | | | |
| 24590-LAW-M6-LMP-00035001 | Melter 2 Plenum Temperature Average | Temperature Element | TE-2267C, 2272C, 2280C | TBD | TBD | TBD | TBD | TBD |
| | | Temperature Transmitter | TT-2267B | | | | | |
| | | Temperature Indicator | TI-2267C, 2272C, 2280C | | | | | |

| | | | | | | | | |
|---|---|---|---|---|---|---|---|---|
| 24590-LAW-M6-LMP-00002002 | Melter 1 Glass Pool Density | Density Transmitter | DT-1404 | TBD | TBD | TBD | TBD | TBD |
| | | Density Indicator | DI-1404 | | | | | |
| 24590-LAW-M6-LMP-00032002 | Melter 2 Glass Pool Density | Density Transmitter | DT-2404 | TBD | TBD | TBD | TBD | TBD |
| | | Density Indicator | DI-2404 | | | | | |
| 24590-LAW-M6-LMP-00002002 | Melter 1 Glass Pool Level | Level Transmitter | LT-1405 | TBD | TBD | TBD | TBD | TBD |
| | | Level Indicator | LI-1405 | | | | | |
| 24590-LAW-M6-LMP-00032002 | Melter 2 Glass Pool Level | Level Transmitter | LT-2405 | TBD | TBD | TBD | TBD | TBD |
| | | Level Indicator | LI-2405 | | | | | |
| 24590-LAW-M6-LMP-00002002 | Melter 1 Plenum Pressure | Pressure Differential Transmitter | PDT-1410 / PDI-1410* or | TBD | TBD | TBD | TBD | TBD |
| | | Pressure Differential Indicator | PDT-1411 / PDI-1411* | | | | | |
| 24590-LAW-M6-LMP-00032002 | Melter 2 Plenum Pressure | Pressure Differential Transmitter | PDT-2410 / PDI-2410* or | TBD | TBD | TBD | TBD | TBD |
| | | Pressure Differential Indicator | PDT-2411 / PDI-2411* | | | | | |
| | | Level Element | LE-1466 | TBD | TBD | TBD | TBD | TBD |

| | | | | | | | | |
|---|---|---|---|---|---|---|---|---|
| 24590-LAW-M6-LMP-00007002 | Melter 1 West Canister Level | (IR Camera) | | | | | | |
| | | Level Transmitter | LT-1466 | | | | | |
| | | Level Indication | LI-1466B | | | | | |
| 24590-LAW-M6-LMP-00007001 | Melter 1 East Canister Level | Level Element (IR Camera) | LE-1511 | TBD | TBD | TBD | TBD | TBD |
| | | Level Transmitter | LT-1511 | | | | | |
| | | Level Indication | LI-1511B | | | | | |
| 24590-LAW-M6-LMP-00037002 | Melter 2 West Canister Level | Level Element (IR Camera) | LE-2466 | TBD | TBD | TBD | TBD | TBD |
| | | Level Transmitter | LT-2466 | | | | | |
| | | Level Indication | LI-2466B | | | | | |
| 24590-LAW-M6-LMP-00037001 | Melter 2 East Canister Level | Level Element (IR Camera) | LE-2511 | TBD | TBD | TBD | TBD | TBD |
| | | Level Transmitter | LT-2511 | | | | | |
| | | Level Indication | LI-2511B | | | | | |
| 24590-LAW-M6-LMP-00010001 | Melter 1 West Discharge Air Lift | On/Off Plug Valve | YV-1125 | TBD | TBD | TBD | TBD | TBD |
| | | Valve Control | YC-1125 | | | | | |
| 24590-LAW-M6-LMP-00008001 | Melter 1 East Discharge Air Lift | On/Off Plug Valve | YV-1047 | TBD | TBD | TBD | TBD | TBD |
| | | Valve Control | YC-1047 | | | | | |

| | | | | | | | | |
|---|---|---|---|---|---|---|---|---|
| 24590-LAW-M6-LMP-00040001 | Melter 2 West Discharge Air Lift | On/Off Plug Valve | YV-2125 | TBD | TBD | TBD | TBD | TBD |
| | | Valve Control | YC-2125 | | | | | |
| 24590-LAW-M6-LMP-00038001 | Melter 2 East Discharge Air Lift | On/Off Plug Valve | YV-2047 | TBD | TBD | TBD | TBD | TBD |
| | | Valve Control | YC-2047 | | | | | |
| 24590-LAW-M6-LMP-00012001 | Melter 1 Feed Encasement Assembly Leak Detection | Cable Type Conductivity Element | LE-1632 | TBD | TBD | TBD | TBD | TBD |
| | | | LAH 1632 | | | | | |
| 24590-LAW-M6-LMP-00042001 | Melter 2 Feed Encasement Assembly Leak Detection | Cable Type Conductivity Element | LE-2632 | TBD | TBD | TBD | TBD | TBD |
| | | | LAH-2632 | | | | | |
| 24590-LAW-M6-LMP-00013002 and 24590-LAW-M6-LMP-00005 | Melter 1 Lid Cooling | Temperature Element | TE-1640 | TBD | TBD | TBD | TBD | TBD |
| | | Temperature Transmitter | TT-1293 | | | | | |
| | | Temperature Indicator | TI-1640 | | | | | |

| | | | | | | | | |
|---|---|---|---|---|---|---|---|---|
| 24590-LAW-M6-LMP-00043 and 24590-LAW-M6-LMP-00035001 | Melter 2 Lid Cooling | Temperature Element | TE-2640 | TBD | TBD | TBD | TBD | TBD |
| | | Temperature Transmitter | TT-2293 | | | | | |
| | | Temperature Indicator | TI-2640 | | | | | |
| *These instrument sets are duplicates. Only one instrument set is required to remain functioning during waste feed operations. | | | | | | | | |

**Table III.10.H.D - Maximum Feed-rates to LAW Vitrification System (RESERVED)**

| Description of Waste | Shakedown 1 and Post Demonstration Test | Shakedown 2 and Demonstration Test |
|---|---|---|
| Dangerous and Mixed Waste Feed-rate | RESERVED | RESERVED |
| Total Chlorine/Chloride Feed-rate | RESERVED | RESERVED |
| Total Metal Feed-rates | RESERVED | RESERVED |
| Total Ash Feed-rate | RESERVED | RESERVED |

**Table III.10.H.E - LAW Vitrification System Estimated Emission Rates (RESERVED)**

| Chemicals | CAS Number | Emission Rates (grams /second) |
|---|---|---|
| RESERVED | RESERVED | RESERVED |

**TABLE III.10.H.F - LAW Vitrification System Waste Feed Cutoff Parameters* 1 (RESERVED)**

| Sub-system Designation | Instrument Tag Number | Parameter Description | Setpoints During Shakedown 1 and Post Demonstration Test | Setpoints During Shakedown 2 and Demonstration Test |
|---|---|---|---|---|
| RESERVED | RESERVED | RESERVED | RESERVED | RESERVED |

*A continuous monitoring system will be used as defined in Permit Section III.10.C.1.

[1]Maximum Feed-rate will be set based on not exceeding any of the constituent (e.g., ash, metals, and chlorine/chloride) feed limits specified on Table III.10.H.D. of this Permit.

1

This page intentionally left blank.

## III.10.I LAW VITRIFICATION SYSTEM – LONG TERM MISCELLANEOUS THERMAL TREATMENT UNIT

For purposes of Permit Section III.10.I, where reference is made to WAC 173-303-640, the following substitutions apply: substitute the terms "LAW Vitrification System" for "tank system(s)," "sub-system(s)" for "tank(s)," "sub-system equipment" for "ancillary equipment," and "sub-system(s) or sub-system equipment of a LAW Vitrification System" for "component(s)," in accordance with WAC 173-303-680.

### III.10.I.1 Requirements For LAW Vitrification System Beginning Normal Operation

Prior to commencing normal operations provided in Permit Section III.10.I, all requirements in Permit Section III.10.H will have been met by the Permittees and approved by Ecology, including the following: The LAW Vitrification System Demonstration Test results and the revised Final Risk Assessment provided for in Permit Condition III.10.C.11.c. or III.10.C.11.d. and Permit Section III.10.H, will have been evaluated and approved by Ecology, Permit Tables III.10.I.D and F, as approved/modified pursuant to Permit Condition III.10.H.5., will have been completed, submitted and approved pursuant to Permit Condition III.10.H.3.d.v. and Permit Table III.10.I.E, as approved/modified pursuant to Permit Condition III.10.H.5, will have been completed, submitted and approved pursuant to Permit Condition III.10.C.11.c. or d.

**III.10.I.1.a** Construction and Maintenance [WAC 173-303-640, in accordance with WAC 173-303-680(2) and (3) and WAC 173-303-340].

**III.10.I.1.a.i** The Permittees will maintain the design and construction of the LAW Vitrification System as specified in Permit Condition III.10.I.1., Operating Unit Group 10, Chapter 4 of this Permit, and Operating Unit Group 10, Appendices 9.1 through 9.17 of this Permit, as approved pursuant to Permit Conditions III.10.H.5.a. through d. and III.10.H.5.f.

**III.10.I.1.a.ii** The Permittees will maintain the design and construction of all containment systems for the LAW Vitrification System, as specified in Operating Unit Group 10, Chapter 4 of this Permit, and Operating Unit Group 10, Appendices 9.2 and 9.4 through 9.14 of this Permit, as approved pursuant to Permit Conditions III.10.H.5.a. through d.

**III.10.I.1.a.iii** Modifications to approved design, plans, and specifications in Operating Unit Group 10 of this Permit for the LAW Vitrification System will be allowed only in accordance with Permit Conditions III.10.C.2.e. and f., or III.10.C.2.g., III.10.C.9.d., e., and h.

**III.10.I.1.a.iv** The Permittees will ensure all certifications required by specialists (e.g., independent, qualified, registered professional engineer; registered professional engineer; independent corrosion expert; independent, qualified installation inspector; installation inspector; etc.) use the following statement or equivalent pursuant to Permit Condition III.10.C.10:

"I, (Insert Name) have (choose one or more of the following: overseen, supervised, reviewed, and/or certified) a portion of the design or installation of a new LAW Vitrification system or component located at (address), and owned/operated by (name(s)). My duties were: (e.g., installation inspector, testing for tightness, etc.), for the following LAW Vitrification System components (e.g., the venting piping, etc.), as required by the Dangerous Waste Regulations, namely, WAC 173-303-640(3) (applicable paragraphs [i.e., (a) through (g)], in accordance with WAC 173-303-680.

"I certify under penalty of law that I have personally examined and am familiar with the information submitted in this document and all attachments and that, based on my inquiry of those individuals immediately responsible for obtaining the information, I believe that the information is true, accurate, and complete. I am aware that there are significant penalties for submitting false information, including the possibility of fine and imprisonment."

**III.10.I.1.a.v** The Permittees will ensure periodic integrity assessments are conducted on the LAW Vitrification System listed in Permit Table III.10.I.A, as approved/modified pursuant to Permit Condition III.10.H.5, over the term of this Permit in accordance with WAC 173-303-680(2) and (3) as specified in WAC 173-303-640(3)(b), following the description of the integrity assessment program and schedule in Operating Unit Group 10, Chapter 6 of this Permit, as approved pursuant to Permit Conditions III.10.H.5.e.i. and III.10.C.5.c. Results of the integrity assessments will be included in the WTP Unit operating record until ten (10) years after post closure, or corrective action is complete and certified, whichever is later.

**III.10.I.1.a.vi** The Permittees will address problems detected during the LAW Vitrification System integrity assessments specified in Permit Condition III.10.I.1.a.v. following the description of the integrity assessment program in Operating Unit Group 10, Chapter 6 of this Permit, as approved pursuant to Permit Conditions III.10.H.5.e.i. and III.10.C.5.c.

**III.10.I.1.a.vii** All process monitors/instruments as specified in Permit Table III.10.I.F, as approved/modified pursuant to Permit Conditions III.10.H.5 and III.10.H.3.d.v., will be equipped with operational alarms to warn of deviation, or imminent deviation from the limits specified in Permit Table III.10.I.F.

**III.10.I.1.a.viii** The Permittees will install and test all process and leak detection system monitors/instruments, as specified in Permit Tables III.10.I.C and III.10.I.F, as approved/modified pursuant to Permit Condition III.10.H.5 and III.10.H.3.d.v., in accordance with Operating Unit Group 10, Appendices 9.1, 9.2, and 9.14 of this Permit, as approved pursuant to Permit Conditions III.10.H.5.d.x. and III.10.H.5.f..xvi.

**III.10.I.1.a.ix** No dangerous and/or mixed waste will be treated in the LAW Vitrification System unless the operating conditions, specified under Permit Condition III.10.I.1.c. are complied with.

**III.10.I.1.a.x** The Permittees will not place dangerous and/or mixed waste, treatment reagents, or other materials in the LAW Vitrification System if these substances could cause the sub-system, sub-system equipment, or the containment system to rupture, leak, corrode, or otherwise fail [WAC 173-303-640(5)(a), in accordance with WAC 173-303-680(2)]. This condition is not applicable to corrosion of LAW Vitrification System sub-system or sub-system equipment that are expected to be replaced as part of normal operations (e.g., melters).

**III.10.I.1.a.xi** The Permittees will operate the LAW Vitrification System to prevent spills and overflows using description of controls and practices as required under WAC 173-303-640(5)(b), described in Permit Condition III.10.C.5 and Operating Unit Group 10, Appendix 9.18 of this Permit, as approved pursuant to Permit Condition III.10.H.5.e. [WAC 173-303-640(5)(b), in accordance with WAC 173-303-680(2) and (3), and WAC 173-303-806(4)(c)(ix)].

**III.10.I.1.a.xii** For routinely non-accessible LAW Vitrification System sub-systems, as specified in Operating Unit Group 10, Chapter 4 of this Permit, as updated pursuant to Permit Condition III.10.H.5.e.vi., the Permittees will mark all routinely non-accessible LAW Vitrification System sub-systems access points with labels or signs to identify the waste contained in each LAW Vitrification System sub-system. The label, or sign, must be legible at a distance of at least fifty (50) feet and must bear a legend which identifies the waste in a manner which adequately warns employees, emergency response personnel, and the public of the major risk(s) associated with the waste being stored or treated in the LAW Vitrification System sub-systems. For the purposes of this permit condition, "routinely non-accessible" means personnel are unable to enter these areas while waste is being managed in them [WAC 173-303-640(5)(d), in accordance with WAC 173-303-680(2)].

**III.10.I.1.a.xiii** For the LAW Vitrification System sub-systems not addressed in Permit Condition III.10.I.1.a.xii., the Permittees will mark these LAW Vitrification System sub-systems holding dangerous and/or mixed waste with labels or signs to identify the waste contained in the LAW Vitrification System sub-systems. The labels, or signs, must be legible at a distance of at least fifty (50) feet and must bear a legend which identifies the waste in a manner which adequately warns employees, emergency response personnel, and the public of the major risk(s) associated with the waste being stored or treated in the LAW Vitrification System sub-systems [WAC 173-303-640(5)(d), in accordance with WAC 173-303-680(2)].

**III.10.I.1.a.xiv** The Permittees will ensure that the secondary containment systems for the LAW Vitrification System sub-systems listed in Permit Tables III.10.I.A and III.10.I.B, as approved/modified pursuant to Permit Condition III.10.H.5, are free of cracks or gaps to prevent any migration of dangerous and/or mixed waste or accumulated liquid out of the system to the soil, groundwater, or surface water at any time during use of the LAW Vitrification System sub-systems. Any indication that a crack or gap may exist in the containment systems will be investigated and repaired in accordance with Operating Unit Group 10, Appendix 9.18 of this Permit, as approved pursuant to Permit Condition III.10.H.5.e.v. [WAC 173-303–640(4)(b)(i), WAC 173-303-640(4)(e)(i)(C), and WAC 173-303-640(6), in accordance with WAC 173-303-680(2) and (3), WAC 173-303-806(4)(i)(i)(B), and WAC 173-303-320].

**III.10.I.1.a.xv** The Permittees must immediately, and safely, remove from service any LAW Vitrification System or secondary containment system which through an integrity assessment is found to be "unfit for use" as defined in WAC 173-303-040, following Permit Condition III.10.I.1.a.xvii. A through D, and F. The affected LAW Vitrification System or secondary containment system must be either repaired or closed in accordance with Permit Condition III.10.I.1.a.xvii.E [WAC 173-303-640(7)(e) and (f) and WAC 173-303-640(8), in accordance with WAC 173-303-680(3)].

**III.10.I.1.a.xvi** An impermeable coating, as specified in Operating Unit Group 10, Appendices 9.4, 9.5, 9.7, 9.9, 9.11, and 9.12 of this Permit, as approved pursuant to Permit Condition III.10.H.5.b.v., will be maintained for all concrete containment systems and concrete portions of containment systems for the LAW Vitrification System sub-systems listed in Permit Tables III.10.I.A and III.10.I.B, as approved/modified pursuant to Permit Condition III.10.H.5 (concrete containment systems that do not have a liner, pursuant to WAC 173-303-640(4)(e)(i), in accordance with WAC 173-303-680(2), and have construction joints, will meet the requirements of WAC 173-303-640(4)(e)(ii)(C), in

accordance with WAC 173-303-680(2). The coating will prevent migration of any dangerous and/or mixed waste into the concrete. All coatings will meet the following performance standards:

A. The coating must seal the containment surface such that no cracks, seams, or other avenues through which liquid could migrate are present.

B. The coating must be of adequate thickness and strength to withstand the normal operation of equipment and personnel within the given area such that degradation or physical damage to the coating or lining can be identified and remedied before dangerous and mixed waste could migrate from the system.

C. The coating must be compatible with the dangerous and/or mixed waste, treatment reagents, or other materials managed in the containment system [WAC 173-303-640(4)(e)(ii)(D), in accordance with WAC 173-303-680(2) and (3) and WAC 173-303-806(4)(i)(i)(A)].

**III.10.I.1.a.xvii** The Permittees inspect all secondary containment systems for the LAW Vitrification System sub-systems listed in Permit Tables III.10.I.A and III.10.I.B, as approved/modified pursuant to Permit Condition III.10.H.5, in accordance with the Inspection Plan specified in Operating Unit Group 10, Chapter 6A of this Permit, as approved pursuant to Permit Conditions III.10.H.5.e.i. and III.10.C.5.c., and take the following actions if a leak or spill of dangerous and/or mixed waste is detected in these containment systems [WAC 173-303-640(5)(c) and WAC 173-303-640(6), in accordance with WAC 173-303-680(2) and (3), WAC 173-303-320, and WAC 173-303-806(4)(i)(i)(B)].

A. Immediately, and safely, stop the flow of dangerous and/or mixed waste into the LAW Vitrification System sub-systems or secondary containment system.

B. Determine the source of the dangerous and/or mixed waste.

C. Remove the waste from the containment area in accordance with WAC 173-303-680(2) and (3) as specified in WAC 173-303-640(7)(b). The waste removed from containment areas of the LAW Vitrification System sub-systems will be, as a minimum, managed as dangerous and/or mixed waste.

D. If the cause of the release was a spill that has not damaged the integrity of the LAW Vitrification System sub-system, the Permittees may return the LAW Vitrification System sub-system to service in accordance with WAC 173-303-680(2) and (3) as specified in WAC 173-303-640(7)(e)(ii). In such case, the Permittees will take action to ensure the incident that caused the dangerous and/or mixed waste to enter the containment system will not reoccur.

E. If the source of the dangerous and/or mixed waste is determined to be a leak from the primary LAW Vitrification System into the secondary containment system, or the system is unfit for use as determined through an integrity assessment or other inspection, the Permittees will comply with the requirements of WAC 173-303-640(7) and take the following actions:

1. Close the LAW Vitrification System sub-system following procedures in WAC 173-303-640(7)(e)(i), in accordance with WAC 173-303-680 and Operating Unit Group 10, Chapter 11 of this Permit, as approved pursuant to Permit Condition III.10.C.8.

2. Repair and re-certify (in accordance with WAC 173-303-810(13)(a), as modified pursuant to Permit Condition III.10.I.1.a.iii.) the LAW

Vitrification System in accordance with Operating Unit Group 10, Appendix 9.18 of this Permit, as approved pursuant to Permit Condition III.10.H.5.e.v., before the LAW Vitrification System is placed back into service [WAC 173-303-640(7)(e)(iii) and WAC 173-303-640(7)(f), in accordance with WAC 173-303-680].

F. The Permittees will document in the WTP Unit operating record actions/procedures taken to comply with A through E above, as specified in WAC 173-303-640(6)(d), in accordance with WAC 173-303-680(2) and (3).

G. In accordance with WAC 173-303-680(2) and (3), the Permittees will notify and report releases to the environment to Ecology, as specified in WAC 173-303-640(7)(d).

**III.10.I.1.a.xviii** If liquids (e.g., dangerous and/or mixed waste, leaks and spills, precipitation, fire water, liquids from damaged or broken pipes) cannot be removed from the secondary containment system within twenty-four (24) hours, Ecology will be verbally notified within twenty-four (24) hours of discovery. The notification will provide the information in A, B, and C, listed below. The Permittees will provide Ecology with a written demonstration within seven (7) business days, identifying at a minimum [WAC 173-303-640(4)(c)(iv) and WAC 173-303-640(7)(b)(ii), in accordance with WAC 173-303-680(3) and WAC 173-303-806(4)(i)(i)(B)]:

A. Reasons for delayed removal.

B. Measures implemented to ensure continued protection of human health and the environment.

C. Current actions being taken to remove liquids from secondary containment.

**III.10.I.1.a.xix** All air pollution control devices and capture systems in the LAW Vitrification System will be maintained and operated at all times in a manner so as to minimize the emissions of air contaminants and to minimize process upsets. Procedures for ensuring that the air pollution control devices and capture systems in the LAW Vitrification System are properly operated and maintained so as to minimize the emission of air contaminants and process upsets will be established.

**III.10.I.1.a.xx** In all future narrative permit submittals, the Permittees will include LAW Vitrification sub-system names with the sub-system designation.

**III.10.I.1.a.xxi** For any portion of the LAW Vitrification System that has the potential for formation and accumulation of hydrogen gases, the Permittees will operate the portion to maintain hydrogen levels below the lower explosive limit [WAC 173-303-815(2)(b)(ii)].

**III.10.I.1.a.xxii** For each LAW Vitrification System sub-system holding dangerous and/or mixed waste that are acutely or chronically toxic by inhalation, the Permittees will operate the system to prevent escape of vapors, fumes, or other emissions into the air [WAC 173-303-806(4)(i)(i)(B) and WAC 173-303-640(5)(e), in accordance with WAC 173-303-680].

**III.10.I.1.a.xxiii** The existing LAW building will retain capability to install the third melter before or after hot start-up. No permanent systems, structures, or components shall be installed in the melter cell, pour cave or wet process cell for the third melter that would preclude future installation of the third melter.

**III.10.I.1.b** Performance Standards

**III.10.I.1.b.i** The LAW Vitrification System must achieve a destruction and removal efficiency (DRE) of 99.99% for the principal organic dangerous constituents (PODCs) listed below [40 CFR §63.1203(c)(1) and 40CFR §63.1203(c)(2), in accordance with WAC 173-303-680(2)]:

RESERVED

DRE in this permit condition will be calculated in accordance with the formula given below:

DRE=[1-(Wout/Win)] x 100%

Where:

Win=mass feed rate of one principal organic dangerous constituent (PODC) in a waste feed stream; and

Wout=mass emission rate of the same PODC present in exhaust emissions prior to release to the atmosphere.

**III.10.I.1.b.ii** Particulate matter emissions from the LAW Vitrification System will not exceed 34 mg/dscm (0.015 grains/dscf) [40 CFR §63.1203(b)(7), in accordance with WAC 173-303-680(2)];

**III.10.I.1.b.iii** Hydrochloric acid and chlorine gas emissions from the LAW Vitrification System will not exceed 21 ppmv, combined [40 CFR §63.1203(b)(6), in accordance with WAC 173-303-680(2)];

**III.10.I.1.b.iv** Dioxin and Furan TEQ emissions from the LAW Vitrification System will not exceed 0.2 nanograms (ng)/dscm, [40 CFR §63.1203(b)(1), in accordance with WAC 173-303-680(2)];

**III.10.I.1.b.v** Mercury emissions from the LAW Vitrification System will not exceed 45 µg/dscm [40 CFR §63.1203(b)(2), in accordance with WAC 173-303-680(2)];

**III.10.I.1.b.vi** Lead and cadmium emissions from the LAW Vitrification System will not exceed 120 µg/dscm, combined [40 CFR §63.1203(b)(3), in accordance with WAC 173-303-680(2)];

**III.10.I.1.b.vii** Arsenic, beryllium, and chromium emissions from the LAW Vitrification System will not exceed 97 µg/dscm, combined [40 CFR §63.1203(b)(4), in accordance with WAC 173-303-680(2)];

**III.10.I.1.b.viii** Carbon monoxide (CO) emission from the LAW Vitrification System will not exceed 100 parts per million (ppm) by volume, over an hourly rolling average (as measured and recorded by the continuous monitoring system), dry basis [40 CFR §63.1203(b)(5)(i), in accordance with WAC 173-303-680(2) and (3)];

**III.10.I.1.b.ix** Hydrocarbon emission from the LAW Vitrification System will not exceed 10 parts per million (ppm) by volume, over an hourly rolling average (as measured and recorded by the continuous monitoring system during demonstration testing required by this Permit), dry basis and reported as propane [40 CFR §63.1203(b)(5)(ii), in accordance with WAC 173-303-680(2) and (3)];

**III.10.I.1.b.x** If the emissions from the LAW Vitrification System exceed the emission rates listed in Permit Table III.10.I.E, as approved pursuant to Permit Condition III.10.C.11.c.

or d., the Permittees will perform the following actions [WAC 173-303-680(2) and (3), and WAC 173-303-815(2)(b)(ii)]:

A. Verbally notify Ecology within twenty-four (24) hours of the discovery of exceeding the emission rate(s) as specified in Permit Condition I.E.21.

B. Submit to Ecology additional risk information to indicate that the increased emissions impact is offset by decreased emission impact from one or more constituents expected to be emitted at the same time, and/or investigate the cause and impact of the exceedance of the emission rate(s) and submit a report of the investigation findings to Ecology within fifteen (15) days of the discovery of exceeding the emission rate(s).

C. Based on the notification and any additional information, Ecology may provide, in writing, direction to the Permittees to stop dangerous and/or mixed waste feed to the LAW Vitrification System and/or to submit a revised Demonstration Test Plan as a permit modification pursuant to Permit Conditions III.10.C.2.e. through g. The revised Demonstration Test Plan must include substantive changes to prevent failure from reoccurring.

The emission limits specified in Permit Conditions III.10.I.1.b.i. through III.10.I.1.b.ix. above, will be met for the LAW Vitrification System by limiting feed rates as specified in Permit Tables III.10.I.D and III.10.I.F, as approved/modified pursuant to Permit Conditions III.10.H.5. and III.10.H.3.d.v., compliance with operating conditions specified in Permit Condition III.10.I.1.c. (except as specified in Permit Condition III.10.I.1.b.xii.), and compliance with Permit Condition III.10.I.1.b.xi.;

**III.10.I.1.b.xi** Treatment effectiveness, feed-rates and operating rates for dangerous and/or mixed waste management units contained in the LAW Building, but not included in Permit Table III.10.I.A, as approved/modified pursuant to Permit Condition III.10.H.5, will be as specified in Permit Sections III.10.D through F and consistent with assumptions and basis which are reflected in Operating Unit Group 10, Appendix 6.3 of this Permit, as approved pursuant to Permit Condition III.10.C.11.b. For the purposes of this permit condition, Operating Unit Group 10, Appendix 6.3 will be superseded by Appendix 6.4 upon its approval pursuant to either Permit Condition III.10.C.11.c or III.10.C.11.d. [WAC 173-303-680(2) and (3), and WAC 173-303-815(2)(b)(ii)];

**III.10.I.1.b.xii** Except during periods of LAW Vitrification System startup and shutdown, compliance with the operating conditions specified in Permit Condition III.10.I.1.c., will be regarded as compliance with the required performance standards identified in Permit Conditions III.10.I.1.b.i. through x. However, if it is determined that during the effective period of this Permit that compliance with the operating conditions in Permit Condition III.10.I.1.c. is not sufficient to ensure compliance with the performance standards specified in Permit Conditions III.10.I.1.b.i. through x., the Permit may be modified, revoked, or reissued pursuant to Permit Conditions III.10.C.2.e. and f., or III.10.C.2.g.

**III.10.I.1.c** Operating Conditions [WAC 173-303-670(6), in accordance with WAC 173-303-680(2) and (3)]

The Permittees will operate the LAW Vitrification System in accordance with Operating Unit Group 10, Chapter 4 of this Permit, as updated pursuant to Permit Condition III.10.H.5.e.vi. and Operating Unit Group 10, Appendix 9.18 of this Permit, as approved pursuant to Permit Condition III.10.H.5.e., and Operating Unit Group 10, Appendix 9.15

of this Permit, as approved pursuant to Permit Condition III.10.H.5.f., except as modified pursuant to Permit Conditions III.10.H.3, III.10.I.1.b.x., III.10.I.1.b.xii., III.10.I.1.h., and in accordance with and the following:

**III.10.I.1.c.i** The Permittees will operate the LAW Vitrification System in order to maintain the systems and process parameters listed in Permit Tables III.10.I.C and III.10.I.F, as approved/modified pursuant to Permit Conditions III.10.H.5 and III.10.H.3.d.v., within the set-points specified in Permit Table III.10.I.F.

**III.10.I.1.c.ii** The Permittees will operate the AWFCO systems, specified in Permit Table III.10.I.F, as approved/modified pursuant to Permit Conditions III.10.H.5 and III.10.H.3.d.v., to automatically cut-off and/or lock-out the dangerous and/or mixed waste feed to LAW Vitrification System when the monitored operating conditions deviate from the set-points specified in Permit Table III.10.I.F.

**III.10.I.1.c.iii** The Permittees will operate the AWFCO systems, specified in Permit Table III.10.I.F, as approved/modified pursuant to Permit Conditions III.10.H.5 and III.10.H.3.d.v., to automatically cut-off and/or lock-out the dangerous and/or mixed waste feed to LAW Vitrification System when all instruments specified in Permit Table III.10.H.F for measuring the monitored parameters fails or exceeds its span value.

**III.10.I.1.c.iv** The Permittees will operate the AWFCO systems, specified in Permit Table III.10.I.F, as approved/modified pursuant to Permit Conditions III.10.H.5 and III.10.H.3.d.v., to automatically cut-off and/or lock out the dangerous waste and/or mixed waste feed to the LAW Vitrification System when any portion of the LAW Vitrification System is bypassed. The terms “bypassed” and “bypass event,” as used in Permit Sections III.10.H and III.10.I, will mean if any portion of the LAW Vitrification System is bypassed so that gases are not treated as during the Demonstration Test.

**III.10.I.1.c.v** In the event of a malfunction of the AWFCO systems listed in Permit Table III.10.I.F, as approved/modified pursuant to Permit Conditions III.10.H.5 and III.10.H.3.d.v., the Permittees will immediately, manually cut-off the dangerous and/or mixed waste feed to the LAW Vitrification System. The Permittees will not restart the dangerous and/or mixed waste feed until the problem causing the malfunction has been identified and corrected.

**III.10.I.1.c.vi** The Permittees will manually cut-off the dangerous and/or mixed waste feed to the LAW Vitrification System when the operating conditions deviate from the limits specified in Permit Condition III.10.I.1.c.i., unless the deviation automatically activates the waste feed cut-off sequence specified in Permit Conditions III.10.I.1.c.ii., iii., and/or iv.

**III.10.I.1.c.vii** If greater than thirty (30) dangerous and/or mixed waste feed cut-off, combined, to the LAW Vitrification System occur due to deviations from Permit Table III.10.I.F, as approved/modified pursuant to Permit Conditions III.10.H.5 and III.10.H.3.d.v., within a sixty (60) day period, the Permittees will submit a written report to Ecology within five (5) calendar days of the thirty-first exceedance, including the information specified below. These dangerous and/or mixed waste feed cut-offs to the LAW Vitrification System, whether automatically or manually activated, are counted if the specified set-points are deviated from while dangerous and/or mixed waste and waste residues continue to be processed in the LAW Vitrification System. A cascade event

is counted at a frequency of one (1) towards the first waste feed cut-off parameter, specified in Permit Table III.10.I.F, from which the set-point is deviated:

A. The parameter(s) that deviated from the set-point(s) in Permit Table III.10.I.F.

B. The magnitude, dates, and duration of the deviations.

C. Results of the investigation of the cause of the deviations.

D. Corrective measures taken to minimize future occurrences of the deviations.

**III.10.I.1.c.viii** If greater than thirty (30) dangerous and/or mixed waste feed cut-off, combined, to the LAW Vitrification System occur due to deviations from Permit Table III.10.I.F, as approved/modified pursuant to Permit Conditions III.10.H.5 and III.10.H.3.d.v., within a thirty (30) day period, the Permittees will submit the written report required to be submitted pursuant to Permit Condition III.10.I.1.c.vii. to Ecology on the first business day following the thirty-first exceedance. These dangerous and/or mixed waste feed cut-offs to the LAW Vitrification System, whether automatically or manually activated, are counted if the specified set-points are deviated from while dangerous and/or mixed waste and waste residues continue to be processed in the LAW Vitrification System. A cascade event is counted at a frequency of one (1) towards the first waste feed cut-off parameter, specified on Permit Table III.10.I.F, from which the set-point is deviated:

In accordance with WAC 173-303-680(2) and (3), the Permittees may not resume dangerous and/or mixed waste feed to the LAW Vitrification System until this written report has been submitted, and

A. Ecology has authorized the Permittees, in writing, to resume dangerous and/or mixed waste feed, or

B. Ecology has not, within seven (7) days, notified the Permittees in writing of the following:

1. The Permittees written report does not document that the corrective measures taken will minimize future exceedances.
2. The Permittees must take further corrective measures and document that these further corrective measures will minimize future exceedances.

**III.10.I.1.c.ix** If any portion of the LAW Vitrification System is bypassed while treating dangerous and/or mixed waste, it will be regarded as non-compliance with the operating conditions specified in Permit Condition III.10.I.1.c. and the performance standards specified in Permit Condition III.10.I.1.b. After such a bypass event, the Permittees will perform the following actions:

A. Investigate the cause of the bypass event.

B. Take appropriate corrective measures to minimize future bypasses.

C. Record the investigation findings and corrective measures in the WTP Unit operating record.

D. Submit a written report to Ecology within five (5) days of the bypass event documenting the result of the investigation and corrective measures.

**III.10.I.1.c.x** The Permittees will control fugitive emissions from the LAW Vitrification System by maintaining the melters under negative pressure.

**III.10.I.1.c.xi** Except during periods of vitrification system startup and shutdown, compliance with the operating conditions specified in Permit Condition III.10.I.1.c. will be regarded as compliance with the required performance standards identified in Permit Condition

III.10.I.1.b. However, evidence that compliance with these operating conditions is insufficient to ensure compliance with the performance standards, will justify modification, revocation, or re-issuance of this Permit, in accordance with Permit Conditions III.10.C.2.e. and f., or III.10.C.2.g.

**III.10.I.1.d** Inspection Requirements [WAC 173-303-680(3)]

**III.10.I.1.d.i** The Permittees will inspect the LAW Vitrification System in accordance with the Inspection Plan in Operating Unit Group 10, Chapter 6A of this Permit, as modified in accordance with Permit Condition III.10.C.5.c.

**III.10.I.1.d.ii** The inspection data for LAW Vitrification System will be recorded, and the records will be placed in the WTP Unit operating record for LAW Vitrification System, in accordance with Permit Condition III.10.C.4.

**III.10.I.1.d.iii** The Permittees will comply with the inspection requirements specified in Operating Unit Group 10, Appendix 9.15 of this Permit, as approved pursuant to Permit Condition III.10.H.5.f. and as modified by Permit Conditions III.10.H.3, III.10.I.1.b.x., III.10.I.1.b.xii., and III.10.I.1.h.

**III.10.I.1.e** Monitoring Requirements [WAC 173-303-670(5), WAC 173-303-670(6), WAC 173-303-670(7), and WAC 173-303-807(2), in accordance with WAC 173-303-680(3)]

**III.10.I.1.e.i** Upon receipt of a written request from Ecology, the Permittees will perform sampling and analysis of the dangerous and/or mixed waste and exhaust emissions to verify that the operating requirements established in the Permit achieve the performance standards delineated in this Permit.

**III.10.I.1.e.ii** The Permittees will comply with the monitoring requirements specified in the Operating Unit Group 10, Appendices 9.2, 9.3, 9.7, 9.13, 9.15 and 9.18 of this Permit, as approved pursuant to Permit Condition III.10.H.5, and as modified by Permit Conditions III.10.H.3, III.10.I.1.h., III.10.I.1.b.x., and III.10.I.1.b.xii.

**III.10.I.1.e.iii** The Permittees will operate, calibrate, and maintain the carbon monoxide and hydrocarbon continuous emission monitors (CEM) specified in this Permit in accordance with Performance Specifications 4B and 8A of 40 CFR Part 60, Appendix B, in accordance with Appendix to Subpart EEE of 40 CFR Part 63, and Operating Unit Group 10 Appendix 9.15 of this Permit, as approved pursuant to Permit Condition III.10.H.5.f., and as modified by Permit Conditions III.10. H.3, III.10.I.1.h., III.10.I.1.b.x., and III.10.I.1.b.xii.

**III.10.I.1.e.iv** The Permittees will operate, calibrate, and maintain the instruments specified in Permit Tables III.10.I.C and F, as approved/modified pursuant to Permit Conditions III.10.H.5 and III.10.H.3.d.v., in accordance with Operating Unit Group 10, Appendix 9.15 of this Permit, as approved pursuant to Permit Condition III.10.H.5.f., and as modified by Permit Conditions III.10.H.3, III.10.I.1.h., III.10.I.1.b.x., and III.10.I.1.b.xii.

**III.10.I.1.e.v** The Permittees shall calibrate, inspect, and maintain or replace the following Melter 1 and Melter 2 cooling water flow and temperature instruments in accordance with manufacturer's recommendations, or as specified in this permit, or otherwise agreed to by Ecology (Melter 1: FT/TI&FI-1206, FT/TI&FI-1209, FT/TI&FI-1215, FT/TI&FI-1218, FT/TI&FI-1221, FT/TI&FI-1224, FT/TI&FI-1227, FT/TI&FI-1233, FT/TI&FI-1236, FT/TI&FI-1536, FT/TI&FI-1539; Melter 2: FT/TI&FI-2206, FT/TI&FI-2209, FT/TI&FI-2215, FT/TI&FI-2218, FT/TI&FI-2221, FT/TI&FI-2224,

FT/TI&FI-2227, FT/TI&FI-2233, FT/TI&FI-2236, FT/TI&FI-2536, FT/TI&FI-2539).

**III.10.I.1.f** Recordkeeping Requirements [WAC 173-303-380 and WAC 173-303-680(3)]

**III.10.I.1.f.i** The Permittees will record and maintain in the WTP Unit operating record for the LAW Vitrification System, all monitoring, calibration, maintenance, test data, and inspection data compiled under the conditions of this Permit, in accordance with Permit Conditions III.10.C.4 and 5, as modified by Permit Conditions III.10.H.3, III.10.I.1.h., III.10.I.1.b.x., and III.10.I.1.b.xii.

**III.10.I.1.f.ii** The Permittees will record in the WTP Unit operating record the date, time, and duration of all automatic waste feed cutoffs and/or lockouts, including the triggering parameters, reason for the deviation, and recurrence of the incident. The Permittees will also record all incidents of AWFCO system function failures, including the corrective measures taken to correct the condition that caused the failure.

**III.10.I.1.f.iii** The Permittees will submit to Ecology an annual report each calendar year within ninety (90) days following the end of the year. The report will include the following information:

A. Total dangerous and/or mixed waste feed processing time for the LAW Vitrification System.

B. Date/Time of all LAW Vitrification System startups and shutdowns.

C. Date/Time/Duration/Cause/Corrective Action taken for all LAW Vitrification System shutdowns caused by malfunction of either process or control equipment.

D. Date/Time/Duration/Cause/Corrective Action taken for all instances of dangerous and/or mixed waste feed cut-off due to deviations from Permit Table III.10.I.F, as approved/modified pursuant to Permit Conditions III.10.H.5 and III.10.H.3.d.v.

**III.10.I.1.f.iv** The Permittees will submit an annual report to Ecology each calendar year within ninety (90) days following the end of the year of all quarterly CEM Calibration Error and Annual CEM Performance Specification Tests conducted, in accordance with Permit Condition III.10.I.1.e.iii.

**III.10.I.1.f.v** The Permittees shall maintain operating and calibration/maintenance records for Ecology's inspection for the following Melter 1 and Melter 2 cooling water flow and temperature instruments (Melter 1: FT/TI&FI-1206, FT/TI&FI-1209, FT/TI&FI-1215, FT/TI&FI-1218, FT/TI&FI-1221, FT/TI&FI-1224, FT/TI&FI-1227, FT/TI&FI-1233, FT/TI&FI-1236, FT/TI&FI-1536, FT/TI&FI-1539; Melter 2: FT/TI&FI-2206, FT/TI&FI-2209, FT/TI&FI-2215, FT/TI&FI-2218, FT/TI&FI-2221, FT/TI&FI-2224, FT/TI&FI-2227, FT/TI&FI-2233, FT/TI&FI-2236, FT/TI&FI-2536, FT/TI&FI-2539).

**III.10.I.1.f.vi** The Permittees shall maintain refractory thermocouple temperature data for Ecology inspection.

**III.10.I.1.g** Closure

The Permittees will close the LAW Vitrification System in accordance with Operating Unit Group 10, Chapter 11 of this Permit, as approved pursuant to Permit Condition III.10.C.8.

**III.10.I.1.h** Periodic Emission Re-testing Requirements [WAC 173-303-670(5), WAC 173-303-670(7), and WAC 173-303-807(2), in accordance with WAC 173-303-680(2) and (3)]

**III.10.I.1.h.i** Dioxin and Furan Emission Testing

A. Within eighteen (18) months of commencing operation pursuant to Permit Section III.10.I, the Permittees will submit to Ecology for approval, a Dioxin and Furan Emission Test Plan (DFETP) for the performance of emission testing of the LAW Vitrification System gases for dioxin and furans during "Normal Operating Conditions" as a permit modification in accordance with Permit Conditions III.10.C.2.e. and III.10.C.2.f. The DFETP will include all elements applicable to dioxin and furan emission testing included in the "Previously Approved Demonstration Test Plan," applicable EPA promulgated test methods and procedures in effect at the time of the submittal, and projected commencement and completion dates for dioxin and furan emission test. "Normal Operating Conditions" will be defined for the purposes of this permit condition as follows:

1. Carbon monoxide emissions, dangerous and/or mixed waste feed-rate, and automatic waste feed cut-off parameters specified in Permit Table III.10.I.F (as approved/modified pursuant to Permit Conditions III.10.H.5 and III.10.H.3.d.v.), that were established to maintain compliance with Permit Condition III.10.I.1.b.iv. as specified in Operating Unit Group 10, Appendix 9.15 of this Permit (as approved pursuant to Permit Condition III.10.H.3.d., and in accordance with III.10.I.1.b.xii. and III.10.I.1.c.xi.), are held within the range of the average value over the previous twelve (12) months and the set-point value specified in Permit Table III.10.I.F. The average value is defined as the sum of the rolling average values recorded over the previous twelve (12) months divided by the number of rolling averages recorded during that time. The average value will not include calibration data, malfunction data, and data obtained when not processing dangerous and/or mixed waste.
2. Feed-rate of metals, ash, and chlorine/chloride are held within the range of the average value over the previous twelve (12) months and the set-point value specified on Permit Table III.10.I.D (as approved/modified pursuant to Permit Conditions III.10.H.5 and III.10.H.3.d.v.). Feed-rate of organics as measured by TOC are held within the range of the average value over the previous twelve (12) months. The average value is defined as the sum of the rolling average values recorded over the previous twelve (12) months divided by the number of rolling averages recorded during that time. The average value will not include data obtained when not processing dangerous and/or mixed waste.

For purposes of this permit condition, the "Previously Approved Demonstration Test Plan" is defined to include the Demonstration Test Plan approved pursuant to Permit Condition III.10.H.5.f.

B. Within sixty (60) days of Ecology's approval of the DFETP, or within thirty-one (31) months of commencing operation pursuant to Permit Section III.10.I, whichever is later, the Permittees will implement the DFETP approved pursuant to Permit Condition III.10.I.1.h.i.A.

C. The Permittees will resubmit the DFETP, approved pursuant to Permit Condition III.10.I.1.h.i.A, revised to include applicable EPA promulgated test methods and

procedures in effect at the time of the submittal, and projected commencement and completion dates for dioxin and furan emission test as a permit modification in accordance with Permit Conditions III.10.C.2.e. and III.10.C.2.f. at twenty-four (24) months from the implementation date of the testing required pursuant to Permit Condition III.10.I.1.h.i.A and at reoccurring eighteen (18) month intervals from the implementation date of the previously approved DFETP. The Permittees will implement these newly approved revised DFETPs, every thirty-one (31) months from the previous approved DFETP implementation date or within sixty (60) days of the newly Ecology approved revised DFETP, whichever is later, for the duration of this Permit.

D. The Permittees will submit a summary of operating data collected pursuant to the DFETPs in accordance with Permit Conditions III.10.I.1.h.i.A and C to Ecology upon completion of the tests. The Permittees will submit to Ecology the complete test report within ninety (90) calendar days of completion of the testing. The test reports will be certified as specified in WAC 173-303-807(8), in accordance with WAC 173-303-680(2) and (3).

E. If any calculations or testing results collected pursuant to the DFETPs in accordance with Permit Conditions III.10.I.1.h.i.A and C. show that one or more of the performance standards listed in Permit Condition III.10.I.1.b., with the exception of Permit Condition III.10.I.1.b.x., for the LAW Vitrification System were not met during the emission test, the Permittees will perform the following actions:

1. Immediately stop dangerous and/or mixed waste feed to the LAW Vitrification System under the mode of operation that resulted in not meeting the performance standard(s).
2. Verbally notify Ecology within twenty-four (24) hours of discovery of not meeting the performance standard(s), as specified in Permit Condition I.E.21.
3. Investigate the cause of the failure and submit a report of the investigation findings to Ecology within fifteen (15) days of discovery of not meeting the performance standard(s).
4. Submit to Ecology within fifteen (15) days of discovery of not meeting the performance standard(s) documentation supporting a mode of operation where all performance standards listed in Permit Condition III.I.1.b., with the exception of Permit Condition III.10.I.1.b.x., for the LAW Vitrification System were met during the demonstration test, if any such mode was demonstrated.
5. Based on the information provided to Ecology by the Permittees pursuant to Permit Conditions III.10.I.1.h.i.E.1 through 4 above, and any additional information, Ecology may provide in writing, direction to the Permittees to stop dangerous waste and mixed waste feed to the LAW Vitrification System and/or amend the mode of operation the Permittees are allowed to continue operations prior to Ecology approval of the revised Demonstration Test Plan pursuant to Permit Condition III.10. I.1.h.i.E.6.
6. Submit to Ecology within one hundred and twenty (120) days of discovery of not meeting the performance standard(s) a revised Demonstration Test Plan requesting approval to retest as a permit modification pursuant to Permit Conditions III.10.C.2.e.and III.10.C.2.f. The revised Demonstration Test Plan must include substantive changes to prevent failure from reoccurring

reflecting performance under operating conditions representative of the extreme range of normal conditions, and include revisions to Permit Tables III.10.I.D and F.

F. If any calculations or testing results collected pursuant to the DFETPs in accordance with Permit Conditions III.10.I.1.h.i.A and C show that any emission rate for any constituent listed in Permit Table III.10.I.E, as approved/modified pursuant to Permit Conditions III.10.C.11.c. or d. is exceeded for LAW Vitrification System during the emission test, the Permittees will perform the following actions:

1. Verbally notify Ecology within twenty-four (24) hours of the discovery of exceeding the emission rate(s), as specified in Permit Condition I.E.21.
2. Submit to Ecology additional risk information to indicate that the increased emissions impact is off-set by decreased emission impact from one or more constituents expected to be emitted at the same time, and/or investigate the cause and impact of the exceedance and submit a report of the investigation findings to Ecology within fifteen (15) days of this discovery of exceeding the emission rate(s).
3. Based on the notification and any additional information, Ecology may provide, in writing, direction to the Permittees to stop dangerous and/or mixed waste feed to the LAW Vitrification System and/or to submit a revised Demonstration Test Plan as a permit modification pursuant to Permit Conditions III.10.C.2.e. and f., or III.10.C.2.g. The revised Demonstration Test Plan must include substantive changes to prevent failure from reoccurring reflecting performance under operating conditions representative of the extreme range of normal conditions, and include revisions to Permit Tables III.10.I.D and III.10.I.F.

**III.10.I.1.h.ii** Non-organic Emission Testing

A. Within forty-eight (48) months of commencing operation pursuant to Permit Section III.10.I, the Permittees will resubmit to Ecology for approval the "Previously Approved Demonstration Test Plan" revised as a permit modification in accordance with Permit Conditions III.10.C.2.e. and III.10.C.2f. The revised Demonstration Test Plan (RDTP) will include applicable EPA promulgated test methods and procedures in effect at the time of the submittal, projected commencement and completion dates for emission testing to demonstrate performance standards specified in Permit Conditions III.10.I.1.b.ii., iii., v., vi., and vii., and non-organic emissions as specified in Permit Table III.10.I.E, as approved/modified pursuant to Permit Conditions III.10.H.3.d. and III.10.C.11.c. or d., under "Normal Operating Conditions." "Normal Operating Conditions" will be defined for the purposes of this permit condition as follows:

1. Carbon monoxide emissions, dangerous and/or mixed waste feed-rate, and automatic waste feed cut-off parameters specified in Permit Table III.10.I.F, as approved/modified pursuant to Permit Conditions III.10.H.3.d. and III.10.C.11.c. or d., that were established to maintain compliance with Permit Conditions III.10.I.1.b.ii., iii., v., vi., and vii., and non-organic emissions, as specified in Permit Table III.10.I.E, as specified in Operating Unit Group 10, Appendix 9.15 of this Permit (as approved pursuant to Permit Conditions III.10.H.3.d. and III.10.C.11.c. or d.), are held within the range of the average value over the previous twelve (12) months and the set-point value specified in Permit Table III.10.I.F. The average value is

defined as the sum of the rolling average values recorded over the previous twelve (12) months divided by the number of rolling averages recorded during that time. The average value will not include calibration data, malfunction data, and data obtained when not processing dangerous or mixed waste.

2. Feed-rate of metals, ash, and chlorine/chloride are held within the range of the average value over the previous twelve (12) months and the set-point value specified in Permit Table III.10.I.D, as approved/modified pursuant to Permit Conditions III.10.H.3.d. and III.10.C.11.c. or d. The average value is defined as the sum of all rolling average values recorded over the previous twelve (12) months divided by the number of rolling averages recorded during that time. The average value will not include data obtained when not processing dangerous or mixed waste.

For purposes of this permit condition, the "Previously Approved Demonstration Test Plan" is defined to include the Demonstration Test Plan approved pursuant to Permit Condition III.10.H.5.f.

B. Within sixty (60) days of Ecology's approval of the RDTP, or within sixty (60) months of commencing operation pursuant to Permit Section III.10.I, whichever is later, the Permittees will implement the RDTP approved pursuant to Permit Condition III.10.I.1.h.ii.A.

C. The Permittees will resubmit the RDTP, approved pursuant to Permit Condition III.10.I.1.h.ii.A, revised to include applicable EPA promulgated test methods and procedures in effect at the time of the submittal, and projected commencement and completion dates for emission test as a permit modification in accordance with Permit Conditions III.10.C.2.e. and f. at forty-eight (48) months from the implementation date of the testing required pursuant to Permit Condition III.10.I.1.h.ii.A and at reoccurring forty-eight (48) month intervals from the implementation date of the previously approved RDTP. The Permittees will implement these newly approved revised RDTP, every sixty (60) months from the previous approved RDTP implementation date or within sixty (60) days of the newly Ecology approved revised RDTP, whichever is later, for the duration of this Permit.

D. The Permittees will submit a summary of operating data collected pursuant to the RDTPs in accordance with Permit Conditions III.10.I.1.h.ii.A and C to Ecology upon completion of the tests. The Permittees will submit to Ecology the complete test report within ninety (90) calendar days of completion of the testing. The test reports will be certified pursuant to WAC 173-303-807(8), in accordance with WAC 173-303-680(2) and (3).

E. If any calculations or testing results collected pursuant to the RDTPs in accordance with Permit Conditions III.10.I.1.h.ii.A and C show that any emission rate for any constituent listed in Permit Table III.10.I.E, as approved/modified pursuant to Permit Conditions III.10.H.3.d. and III.10.C.11.c. or d., is exceeded for LAW Vitrification System during the emission test, the Permittees will perform the following actions:

1. Verbally notify Ecology within twenty-four (24) hours of the discovery of exceeding the emission rate(s), as specified in Permit condition I.E.21;

2. Submit to Ecology additional risk information to indicate that the increased emissions impact is off-set by decreased emission impact from one or more constituents expected to be emitted at the same time, and/or investigate the

cause and impact of the exceedance and submit a report of the investigation findings to Ecology within fifteen (15) days of this discovery of exceeding the emission rate(s); and

3. Based on the notification and any additional information, Ecology may provide, in writing, direction to the Permittees to stop dangerous and/or mixed waste feed to the LAW Vitrification System and/or to submit a revised Demonstration Test Plan as a permit modification pursuant to Permit Conditions III.10.C.2.e. and f., or III.10.C.2.g. The revised Demonstration Test Plan must include substantive changes to prevent failure from reoccurring reflecting performance under operating conditions representative of the extreme range of normal conditions, and include revisions to Permit Tables III.10.I.D and III.10.I.F.

F. If any calculations or testing results collected pursuant to the RDTPs in accordance with Permit Conditions III.10.I.1.h.ii.A and C show that one or more of the performance standards listed in Permit Condition III.10.I.1.b., with the exception of Permit Condition III.10.I.1.b.x., for the LAW Vitrification System were not met during the emission test, the Permittees will perform the following actions:

1. Immediately stop dangerous and/or mixed waste feed to the LAW Vitrification System under the mode of operation that resulted in not meeting the performance standard(s);
2. Verbally notify Ecology within twenty-four (24) hours of discovery of not meeting the performance standard(s), as specified in Permit condition I.E.21;
3. Investigate the cause of the failure and submit a report of the investigation findings to Ecology within fifteen (15) days of discovery of not meeting the performance standard(s);
4. Submit to Ecology within fifteen (15) days of discovery of not meeting the performance standard(s) documentation supporting a mode of operation where all performance standards listed in Permit Condition III.I.1.b., with the exception of Permit Condition III.10.I.1.b.x., for the LAW Vitrification System were met during the demonstration test, if any such mode was demonstrated;
5. Based on the information provided to Ecology by the Permittees pursuant to Permit Conditions III.10.I.1.h.ii.F.1 through 4 above, and any additional information, Ecology may provide in writing, direction to the Permittees to stop dangerous and/or mixed waste feed to the LAW Vitrification System and/or amend the mode of operation the Permittees are allowed to continue operations prior to Ecology approval of the revised Demonstration Test Plan pursuant to Permit Condition III.10.I.1.h.ii.F.6; and
6. Submit to Ecology within one hundred and twenty (120) days of discovery of not meeting the performance standard(s) a revised Demonstration Test Plan requesting approval to retest as a permit modification pursuant to Permit Conditions III.10.C.2.e. and f. The revised Demonstration Test Plan must include substantive changes to prevent failure from reoccurring reflecting performance under operating conditions representative of the extreme range of normal conditions, and include revisions to Permit Tables III.10.I.D and F.

**III.10.I.1.h.iii** Other Emission Testing

A. Within seventy-eight (78) months of commencing operation pursuant to Permit Section III.10.I, the Permittees will resubmit to Ecology for approval the "Previously Approved Demonstration Test Plan" revised as a permit modification in accordance with Permit Conditions III.10.C.2.e. and f. The Revised Demonstration Test Plan (RDTP) will include applicable EPA promulgated test methods and procedures in effect at the time of the submittal, projected commencement and completion dates for emission testing to demonstrate performance standards as specified in Permit Conditions III.10.I.1.b.viii. and ix., and emissions as specified in Permit Table III.10.I.E, as approved/modified pursuant to Permit Conditions III.10.H.3.d. and III.10.C.11.c. or d., not addressed under Permit Conditions III.10.I.1.h.i. or ii. under "Normal Operating Conditions." "Normal Operating Conditions" will be defined for the purposes of this permit condition as follows:

1. Carbon monoxide emissions, dangerous and/or mixed waste feed-rate, and automatic waste feed cut-off parameters specified in Permit Table III.10.I.F, as approved/modified pursuant to Permit Condition III.10.H.3.d. and III.10.C.11.c. or d., that were established to maintain compliance with Permit Conditions III.10.I.1.b.viii. and ix., and emissions as specified in Permit Table III.10.I.E, not addressed under Permit Conditions III.10.I.1.h.i. or ii. as specified in Operating Unit Group 10, Appendix 9.15 of this Permit, as approved pursuant to Permit Condition III.10.H.3.d., and in accordance with Permit Conditions III.10.I.1.b.xii. and III.10.I.1.c.xi. are held within the range of the average value over the previous twelve (12) months and the set-point value specified on Permit Table III.10.I.F. The average value is defined as the sum of all rolling average values recorded over the previous twelve (12) months divided by the number of rolling averages recorded during that time. The average value will not include calibration data, malfunction data, and data obtained when not processing dangerous and/or mixed waste.
2. Feed-rate of metals, ash, and chlorine/chloride are held within the range of the average value over the previous twelve (12) months and the set-point value specified in Permit Table III.10.I.D, as approved/modified pursuant to Permit Conditions III.10.H.3.d. and III.10.C.11.c. or d. Feed-rate of organics as measured by TOC are held within the range of the average value over the previous twelve (12) months. The average value is defined as the sum of the rolling average values recorded over the previous twelve (12) months divided by the number of rolling averages recorded during that time. The average value will not include data obtained when not processing dangerous and/or mixed waste.

For purposes of this permit condition, the "Previously Approved Demonstration Test Plan" is defined to include the Demonstration Test Plan approved pursuant to Permit Condition III.10.H.5.f.

B. Within sixty (60) days of Ecology's approval of the RDTP, or within ninety-one (91) months of commencing operation pursuant to Permit Section III.10.I, whichever is later, the Permittees will implement the RDTP approved pursuant to Permit Condition III.10.I.1.h.iii.A.

C. The Permittees will submit a summary of operating data collected pursuant to the RDTPs in accordance with Permit Condition III.10.I.1.h.iii.A to Ecology upon

completion of the tests. The Permittees will submit to Ecology the complete test report within ninety (90) calendar days of completion of the testing. The test reports will be certified as specified in WAC 173-303-807(8), in accordance with Permit Condition WAC 173-303-680(2) and (3).

D. If any calculations or testing results show that one or more of the performance standards listed in Permit Condition III.10.I.1.b., with the exception of Permit Condition III.10.I.1.b.x., for the LAW Vitrification System were not met during the emission test, the Permittees will perform the following actions:

1. Immediately stop dangerous and/or mixed waste feed to the LAW Vitrification System under the mode of operation that resulted in not meeting the performance standard(s);
2. Verbally notify Ecology within twenty-four (24) hours of discovery of not meeting the performance standard(s), as specified in Permit Condition I.E.21.
3. Investigate the cause of the failure and submit a report of the investigation findings to Ecology within fifteen (15) days of discovery of not meeting the performance standard(s).
4. Submit to Ecology within fifteen (15) days of discovery of not meeting the performance standard(s) documentation supporting a mode of operation where all performance standards listed in Permit Condition III.I.1.b., with the exception of Permit Condition III.10.I.1.b.x., for the LAW Vitrification System were met during the demonstration test, if any such mode was demonstrated.
5. Based on the information provided to Ecology by the Permittees pursuant to Permit Conditions III.10.I.1.h.iii.D.1 through 4 above, and any additional information, Ecology may provide in writing, direction to the Permittees to stop dangerous and/or mixed waste feed to the LAW Vitrification System and/or amend the mode of operation the Permittees are allowed to continue operations prior to Ecology approval of the revised Demonstration Test Plan, pursuant to Permit Condition III.10. I.h.1.iii.D.6.
6. Submit to Ecology within one hundred and twenty (120) days of discovery of not meeting the performance standard(s) a revised Demonstration Test Plan requesting approval to retest as a permit modification pursuant to Permit Conditions III.10.C.2.e. and f. The revised Demonstration Test Plan must include substantive changes to prevent failure from reoccurring reflecting performance under operating conditions representative of the extreme range of normal conditions, and include revisions to Permit Tables III.10.I.D and III.10.I.F.

E. If any calculations or testing results show that any emission rate for any constituent listed in Permit Table III.10.I.E, as approved/modified pursuant to Permit Conditions III.10.C.11.c. or d., is exceeded for LAW Vitrification System during the emission test, the Permittees will perform the following actions:

1. Verbally notify Ecology within twenty-four (24) hours of the discovery of exceeding the emission rate(s), as specified in Permit Condition I.E.21.
2. Submit to Ecology additional risk information to indicate that the increased emissions impact is off-set by decreased emission impact from one or more constituents expected to be emitted at the same time, and/or investigate the cause and impact of the exceedance of the emission rate(s) and submit a

report of the investigation findings to Ecology within fifteen (15) days of the discovery of the exceedance of the emission rate(s).

3. Based on the notification and any additional information, Ecology may provide, in writing, direction to the Permittees to stop dangerous and/or mixed waste feed to the LAW Vitrification System and/or to submit a revised Demonstration Test Plan as a permit modification pursuant to Permit Conditions III.10.C.2.e. and f., or III.10.C.2.g. The revised Demonstration Test Plan must include substantive changes to prevent failure from reoccurring reflecting performance under operating conditions representative of the extreme range of normal conditions, and include revisions to Permit Tables III.10.I.D and F.

This page intentionally left blank.

**Table III.10.I.A - LAW Vitrification System Description[a]**

| Sub-system Description | Sub-system Designation | Engineering Description (Drawing Nos, Specification Nos, etc.) | Narrative Description, Tables and Figures |
|---|---|---|---|
| RESERVED | RESERVED | RESERVED | RESERVED |

[a]Permit Table III.10.I.A will be completed in accordance with Permit Condition III.10.H.5.e.x., prior to initiating Permit Condition III.10.I.1. See Permit Table III.10.H.A for the current LAW Vitrification System Description.

1

**Table III.10.I.B - LAW Vitrification System Secondary Containment Systems Including Sumps and Floor Drains**

| Sump/Floor Drain I.D.# & Room Location | Maximum Sump Capacity (gallons) | Sump Dimensions[b] (feet) & Materials of Construction | Engineering Description (Drawing Nos, Specification Nos, etc.) |
|---|---|---|---|
| RESERVED | RESERVED | RESERVED | RESERVED |

[a]Permit Table III.10.I.B will be completed in accordance with Permit Condition III.10.H.5.b.vii., prior to initiating Permit Condition III.10.I.1. See Permit Table III.10.H.B for the current LAW Vitrification System Secondary Containment Systems Including Sumps and Floor Drains.

[b]Dimensions listed are based on permitted design. Actual dimensions may vary within plus or minus (TBD).

2

**Table III.10.I.C - LAW Vitrification Systems Process and Leak Detection System Instruments and Parameters**

| Sub-system Locator and Name (including P&ID) | Control Parameter | Type of Measuring or Leak Detection Instrument | Location of Measuring Instrument (Tag No.) | Instrument Range | Failure State | Expected Range | Instrument Accuracy | Instrument Calibration Method No. and Range |
|---|---|---|---|---|---|---|---|---|
| RESERVED | RESERVED | RESERVED | RESERVED | RESERVED | RESERVED | RESERVED | RESERVED | RESERVED |

[a]Permit Table III.10.I.C will be completed in accordance with Permit Condition III.10.H.5.e.ix., prior to initiating Permit Condition III.10.I.1 See Permit Table III.10.H.C for the current LAW Vitrification Systems Process and Leak Detection System Instruments and Parameters.

3

**Table III.10.I.D - Maximum Feed-rates to LAW Vitrification System (RESERVED)**

| Description of Waste | Normal Operation |
|---|---|
| Dangerous and/or Mixed Waste Feed Rate | RESERVED |
| Ash Feed Rate | RESERVED |
| Total Chlorine/Chloride Feed Rate | RESERVED |
| Total Metal Feedrates | RESERVED |

**Table III.10.I.E - LAW Vitrification System Estimated Emission Rates (RESERVED)**

| Chemicals | CAS Number | Emission Rates (grams /second) |
|---|---|---|
| RESERVED | RESERVED | RESERVED |

**TABLE III.10.I.F - LAW Vitrification System Waste Feed Cut-off Parameters* [1](RESERVED)**

| Sub-system Designation | Instrument Tag Number | Parameter Description | Set-points During Normal Operation |
|---|---|---|---|
| RESERVED | RESERVED | RESERVED | RESERVED |

*A continuous monitoring system will be used as defined in Permit Section III.10.C.1.

[1]Maximum Feed-rate will be set based on not exceeding any of the constituent (e.g., metals, ash, and chlorine/chloride) feed limits specified on Table III.10.I.D. of this Permit

## III.10.J HLW VITRIFICATION SYSTEM – SHORT TERM MISCELLANEOUS THERMAL TREATMENT UNIT-SHAKEDOWN, DEMONSTRATION TEST, AND POST DEMONSTRATION TEST

For purposes of Permit Section III.10.J, where reference is made to WAC 173-303-640, the following substitutions apply: substituting the terms "HLW Vitrification System" for "tank system(s)," "sub-system(s)" for "tank(s)," "sub-system equipment" for "ancillary equipment," and "sub-system(s) or sub-system equipment of a HLW Vitrification System" for "component(s)," in accordance with WAC 173-303-680.

### III.10.J.1 General Conditions During Shakedown, Demonstration Test, and Post-Demonstration Test for HLW Vitrification System

**III.10.J.1.a** Construction and Maintenance [WAC 173-303-640, in accordance with WAC 173-303-680(2) and (3), and WAC 173-303-340].

**III.10.J.1.a.i** The Permittees will construct the HLW Vitrification System (listed in Permit Tables III.10.J.A and III.10.J.B, as approved/modified pursuant to Permit Condition III.10.J.5.) as specified in Permit Condition III.10.J.1. and Operating Unit Group 10, Chapter 4 of this Permit, and Operating Unit Group 10, Appendices 10.1 through 10.15 and 10.17 of this Permit, as approved pursuant to Permit Conditions III.10.J.5.a. through d., and III.10.J.5.f.

**III.10.J.1.a.ii** The Permittees will construct all containment systems for the HLW Vitrification System as specified in Operating Unit Group 10, Chapter 4 of this Permit, and Operating Unit Group 10, Appendices 10.2, 10.4, through 10.14 of this Permit, as approved pursuant to Permit Conditions III.10.J.5.a. through d.

**III.10.J.1.a.iii** The Permittees will ensure all certifications required by specialists (e.g., independent, qualified, registered professional engineer, independent corrosion expert, independent qualified installation inspector, etc.) use the following statement or equivalent pursuant to Permit Condition III.10.C.10.:

"I, (Insert Name) have (choose one or more of the following: overseen, supervised, reviewed, and/or certified) a portion of the design or installation of a new HLW Vitrification system or component located at (address), and owned/operated by (name(s)). My duties were: (e.g., installation inspector, testing for tightness, etc.), for the following HLW Vitrification system components (e.g., the venting piping, etc.), as required by the Dangerous Waste Regulations, namely, WAC 173-303-640(3) (applicable paragraphs (i.e., (a) through (g)) in accordance with WAC 173-303-680).

"I certify under penalty of law that I have personally examined and am familiar with the information submitted in this document and all attachments and that, based on my inquiry of those individuals immediately responsible for obtaining the information, I believe that the information is true, accurate, and complete. I am aware that there are significant penalties for submitting false information, including the possibility of fine and imprisonment."

**III.10.J.1.a.iv** The Permittees must ensure that proper handling procedures are adhered to in order to prevent damage to the HLW Vitrification System during installation. Prior to covering, enclosing, or placing the new HLW Vitrification System or component in use, an independent, qualified, installation inspector or an independent, qualified, registered professional engineer, either of whom is trained and experienced in the

proper installation of similar systems or components, must inspect the system for the presence of any of the following items:

A. Weld breaks

B. Punctures

C. Scrapes of protective coatings

D. Cracks

E. Corrosion

F. Other structural damage or inadequate construction/installation

All discrepancies must be remedied before the HLW Vitrification system is covered, enclosed, or placed in use [WAC 173-303-640(3)(c), in accordance with WAC 173-303-680(2) and (3)].

**III.10.J.1.a.v** For the HLW Vitrification System or components that are placed underground and that are back-filled, the Permittees must provide a backfill material that is a non-corrosive, porous, homogeneous substance. The backfill must be installed so that it is placed completely around the HLW Vitrification System and compacted to ensure that the HLW Vitrification System is fully and uniformly supported [WAC 173-303-640(3)(d), in accordance with WAC 173-303-680(2) and (3)].

**III.10.J.1.a.vi** The Permittees must test for tightness the HLW Vitrification System or components, prior to being covered, enclosed, or placed into use. If the HLW Vitrification System or components are found not to be tight, all repairs necessary to remedy the leak(s) in the system must be performed prior to the HLW Vitrification System being covered, enclosed, or placed in use [WAC 173-303-640(3)(e), in accordance with WAC 173-303-680(2) and (3)].

**III.10.J.1.a.vii** The Permittees must ensure the HLW Vitrification System equipment is supported and protected against physical damage and excessive stress due to settlement, vibration, expansion, or contraction [WAC 173-303-640(3)(f), in accordance with WAC 173-303-680(2) and (3)].

**III.10.J.1.a.viii** The Permittees must provide the type and degree of corrosion protection recommended by an independent corrosion expert, based on the information provided in Operating Unit Group 10, Appendices 10.9 and 10.11 of this Permit, as approved pursuant to Permit Conditions III.10.J.5.b.i., III.10.J.5.b.iv., III.10.J.5.b.v., III.10.J.5.c.i., III.10.J.5.c.iv., III.10.J.5.c.v., III.10.J.5.d.i., III.10.J.5.d.iv., and III.10.J.5.d.v., or other corrosion protection if Ecology believes other corrosion protection is necessary to ensure the integrity of the HLW Vitrification System during use of the HLW Vitrification System. The installation of a corrosion protection system that is field fabricated must be supervised by an independent corrosion expert to ensure proper installation [WAC 173-303-640(3)(g), in accordance with WAC 173-303-680(2) and (3)].

**III.10.J.1.a.ix** Prior to initial receipt of dangerous and/or mixed waste in the WTP Unit, the Permittees will obtain and keep on file in the WTP Unit operating record, written statements by those persons required to certify the design of the HLW Vitrification System and supervise the installation of the HLW Vitrification System, as specified in WAC 173-303-640(3)(b), (c), (d), (e), (f), and (g), in accordance with WAC 173-303-680, attesting that the HLW Vitrification system and corresponding containment system listed in Permit Tables III.10.J.A and III.10.J.B, as approved/modified pursuant to Permit Condition III.10.J.5., were properly designed

and installed, and that repairs, in accordance with WAC 173-303-640(3)(c) and (e), were performed [WAC 173-303-640(3)(a) and WAC 173-303-640(3)(h), in accordance with WAC 173-303-680(3)].

**III.10.J.1.a.x** The independent HLW Vitrification System installation inspection and subsequent written statements will be certified in accordance with WAC 173-303-810(13)(a), as modified pursuant to Permit Condition III.10.J.1.a.iii., comply with all requirements of WAC 173-303-640(3)(h) in accordance with WAC 173-303-680, and will consider, but not be limited to, the following LAW Vitrification System installation documentation:

A. Field installation report with date of installation.

B. Approved welding procedures.

C. Welder qualification and certifications.

D. Hydro-test reports, as applicable, in accordance with the American Society of Mechanical Engineers Boiler and Pressure Vessel Code, Section VIII, Division 1; American Petroleum Institute (API) Standard 620, or Standard 650, as applicable.

E. Tester credentials.

F. Field inspector credentials.

G. Field inspector reports.

H. Field waiver reports.

I. Non-compliance reports and corrective action (including field waiver reports) and repair reports.

**III.10.J.1.a.xi** The Permittees will ensure periodic integrity assessments are conducted on the HLW Vitrification System, listed in Permit Table III.10.J.A, as approved/modified pursuant to Permit Condition III.10.J.5., over the term of this Permit, in accordance with WAC 173-303-680(2) and (3) as specified in WAC 173-303-640(3)(b), following the description of the integrity assessment program and schedule in Operating Unit Group 10, Addendum E of this Permit, as approved pursuant to Permit Conditions III.10.J.5.e.i. and III.10.C.5.c. Results of the integrity assessments will be included in the WTP Unit operating record until ten (10) years after post-closure, or corrective action is complete and certified, whichever is later.

**III.10.J.1.a.xii** The Permittees will address problems detected during the HLW Vitrification System integrity assessments specified in Permit Condition III.10.J.1.a.xi. following the integrity assessment program in Operating Unit Group 10, Addendum E of this Permit, as approved pursuant to Permit Conditions III.10.J.5.e.i. and III.10.C.5.c.

**III.10.J.1.a.xiii** All process monitors/instruments as specified in Permit Table III.10.J.F, as approved/modified pursuant to Permit Condition III.10.J.5., will be equipped with operational alarms to warn of deviation, or imminent deviation from the limits specified in Permit Table III.10.J.F.

**III.10.J.1.a.xiv** The Permittees will install and test all process and leak detection system monitors/instrumentation as specified in Permit Tables III.10.J.C and III.10.J.F, as approved/modified pursuant to Permit Condition III.10.J.5, in accordance with Operating Unit Group 10, Appendices 10.1, 10.2, and 10.14 of this Permit, as approved pursuant to Permit Conditions III.10.J.5.d.x. and III.10.J.5.f.xvi.

**III.10.J.1.a.xv** Except during periods of HLW Vitrification System start up and shut down, no dangerous and/or mixed waste will be treated in the HLW Vitrification System unless

the operating conditions specified under Permit Condition III.10.J.1.c. are complied with.

**III.10.J.1.a.xvi** The Permittees will not place dangerous and/or mixed waste, treatment reagents, or other materials in the HLW Vitrification System if these substances could cause the subsystem, subsystem equipment, or the containment system to rupture, leak, corrode, or otherwise fail [WAC 173-303-640(5)(a), in accordance with WAC 173-303-680(2)]. This condition is not applicable to corrosion of HLW Vitrification System sub-system and sub-system equipment that are expected to be replaced as part of normal operations (e.g., melters).

**III.10.J.1.a.xvii** The Permittees will operate the HLW Vitrification System to prevent spills and overflows using description of controls and practices as required under WAC 173-303-640(5)(b) described in Permit Condition III.10.C.5, and Operating Unit Group 10, Appendix 10.18 of this Permit, as approved pursuant to Permit Condition III.10.J.5.e. [WAC 173-303-640(5)(b), in accordance with WAC 173-303-680(2) and (3), and WAC 173-303-806(4)(c)(ix)].

**III.10.J.1.a.xviii** For routinely non-accessible HLW Vitrification System sub-systems, as specified in Operating Unit Group 10, Chapter 4 of this Permit, as updated pursuant to Permit Condition III.10.J.5.e.vi., the Permittees will mark all routinely non-accessible HLW Vitrification System sub-systems access points with labels or signs to identify the waste contained in each HLW Vitrification System sub-system. The label, or sign, must be legible at a distance of at least fifty (50) feet, and must bear a legend which identifies the waste in a manner which adequately warns employees, emergency response personnel, and the public of the major risk(s) associated with the waste being stored or treated in the HLW Vitrification System sub-systems. For the purposes of this permit condition, "routinely non-accessible" means personnel are unable to enter these areas while waste is being managed in them [WAC 173-303-640(5)(d), in accordance with WAC 173-303-680(2)].

**III.10.J.1.a.xix** For all HLW Vitrification System sub-systems not addressed in Permit Condition III.10.J.1.a.xviii., the Permittees will mark all these HLW Vitrification System sub-systems holding dangerous and/or mixed waste with labels or signs to identify the waste contained in the HLW Vitrification System sub-systems. The labels, or signs, must be legible at a distance of at least fifty (50) feet, and must bear a legend which identifies the waste in a manner which adequately warns employees, emergency response personnel, and the public of the major risk(s) associated with the waste being stored or treated in the HLW Vitrification System sub-systems [WAC 173-303-640(5)(d), in accordance with WAC 173-303-680(2)].

**III.10.J.1.a.xx** The Permittees will ensure that the containment systems for the HLW Vitrification System sub-systems listed in Permit Tables III.10.J.A. and III.10.J.B, as approved/modified pursuant to Permit Condition III.10.J.5, are free of cracks or gaps to prevent any migration of dangerous and/or mixed waste or accumulated liquid out of the system to the soil, groundwater, or surface water at any time during use of the HLW Vitrification System sub-systems. Any indication that a crack or gap may exist in the containment systems will be investigated and repaired in accordance with Operating Unit Group 10, Appendix 10.18 of this Permit, as approved pursuant to Permit Condition III.10.J.5.e.v. [WAC 173-303–640(4)(b)(i), WAC 173-303–640(4)(e)(i)(C), and WAC 173-303-640(6), in accordance with

WAC 173-303-680(2) and (3), WAC 173-303-806(4)(i)(i)(B), and WAC 173-303-320].

**III.10.J.1.a.xxi** The Permittees must immediately, and safely, remove from service any HLW Vitrification System or secondary containment system which, through an integrity assessment, is found to be "unfit for use" as defined in WAC 173-303-040, following Permit Conditions III.10.J.1.a.xxiii.A. through D., and F. The affected HLW Vitrification System, or secondary containment system, must be either repaired or closed in accordance with Permit Condition III.10.J.1.a.xxiii.E. [WAC 173-303-640(7)(e) and (f), and WAC 173-303-640(8), in accordance with WAC 173-303-680(3)].

**III.10.J.1.a.xxii** An impermeable coating, as specified in Operating Unit Group 10, Appendices 10.4, 10.5, 10.7, 10.9, 10.11, and 10.12 of this Permit, as approved pursuant to Permit Condition III.10.J.5.b.v., will be maintained for all concrete containment systems and concrete portions of containment systems for each HLW Vitrification System sub-systems listed in Permit Tables III.10.J.A and III.10.J.B as approved/modified pursuant to Permit Condition III.10.J.5 (concrete containment systems that do not have a liner, pursuant to WAC 173-303-640(4)(e)(i), in accordance with WAC 173-303-680(2), and have construction joints, will meet the requirements of WAC 173-303-640(4)(e)(ii)(C), in accordance with WAC 173-303-680(2). The coating will prevent migration of any dangerous and mixed waste into the concrete. All coatings will meet the following performance standards:

A. The coating must seal the containment surface such that no cracks, seams, or other avenues through which liquid could migrate, are present;

B. The coating must be of adequate thickness and strength to withstand the normal operation of equipment and personnel within the given area such that degradation or physical damage to the coating or lining can be identified and remedied before dangerous and mixed waste could migrate from the system; and

C. The coating must be compatible with the dangerous and mixed waste, treatment reagents, or other materials managed in the containment system [WAC 173-303-640(4)(e)(ii)(D), in accordance with WAC 173-303-680(2) and (3), and WAC 173-303-806(4)(i)(i)(A)].

**III.10.J.1.a.xxiii** The Permittees will inspect all containment systems for the HLW Vitrification System sub-systems listed in Permit Tables III.10.J.A and III.10.J.B, as approved/modified pursuant to Permit Condition III.10.J.5., in accordance with the Inspection Plan specified in Operating Unit Group 10, Chapter 6A of this Permit, as approved pursuant to Permit Conditions III.10.J.5.e.i. and III.10.C.5.c., and take the following actions if a leak or spill of dangerous and/or mixed waste is detected in these containment systems [WAC 173-303-640(5)(c) and WAC 173-303-640(6), in accordance with WAC 173-303-680(2) and (3), WAC 173-303-320, and WAC 173-303-806(4)(i)(i)(B)]:

A. Immediately, and safely, stop the flow of dangerous and/or mixed waste into the HLW Vitrification System sub-systems or secondary containment system.

B. Determine the source of the dangerous and/or mixed waste.

C. Remove the dangerous and/or mixed waste from the containment area in accordance with WAC 173-303-680(2) and (3), as specified in WAC 173-303-640(7)(b). The dangerous and/or mixed waste removed from containment areas

of the HLW Vitrification System sub-systems will be, as a minimum, managed as mixed waste.

D. If the cause of the release was a spill has not damaged the integrity of the HLW Vitrification System sub-system, the Permittees may return the HLW Vitrification System sub-system to service in accordance with WAC 173-303-680(2) and (3), as specified in WAC 173-303-640(7)(e)(ii). In such case, the Permittees will take action to ensure the incident that caused the dangerous and/or mixed waste to enter the containment system will not re-occur [WAC 173-303-320(3)].

E. If the source of the dangerous and/or mixed waste is determined to be a leak from the primary HLW Vitrification System into the secondary containment system, or the system is unfit for use as determined through an integrity assessment or other inspection, the Permittees will comply with the requirements of WAC 173-303-640(7) and take the following actions:

1. Close the HLW Vitrification System Sub-system following procedures in WAC 173-303-640(7)(e)(i), in accordance with WAC 173-303-680 and Operating Unit Group 10, Addendum H of this Permit, as approved pursuant to Permit Condition III.10.C.8., or

2. Repair and re-certify (in accordance with WAC 173-303-810(13)(a), as modified pursuant to Permit Condition III.10.J.1.a.iii.) the HLW Vitrification System in accordance with Operating Unit Group 10, Appendix 10.18 of this Permit, as approved pursuant to Permit Condition III.10.J.5.e.v., before the HLW Vitrification System is placed back into service [WAC 173-303-640(7)(e)(iii) and WAC 173-303-640(7)(f), in accordance with WAC 173-303-680].

F. The Permittees will document, in the WTP Unit operating record, actions/procedures taken to comply with A. through E. above, as specified in WAC 173-303-640(6)(d), in accordance with WAC 173-303-680(2) and (3).

G. In accordance with WAC 173-303-680(2) and WAC 173-303-680 (3), the Permittees will notify and report releases to the environment to Ecology, as specified in WAC 173-303-640(7)(d).

**III.10.J.1.a.xxiv** If liquids (e.g., dangerous and/or mixed waste leaks and spills, precipitation, fire water, liquids from damaged or broken pipes) cannot be removed from the secondary containment system within twenty-four (24) hours, Ecology will be verbally notified within twenty-four (24) hours of discovery. The notification will provide the information in A, B, and C, listed below. The Permittees will provide Ecology with a written demonstration within seven (7) business days, identifying at a minimum [WAC 173-303-640(4)(c)(iv) and WAC 173-303-640(7)(b)(ii), in accordance with WAC 173-303-680(3) and WAC 173-303-806(4)(i)(i)(B)]:

A. Reasons for delayed removal;

B. Measures implemented to ensure continued protection of human health and the environment;

C. Current actions being taken to remove liquids from secondary containment.

**III.10.J.1.a.xxv** All air pollution control devices and capture systems in the HLW Vitrification System will be maintained and operated at all times in a manner so as to minimize the emissions of air contaminants and to minimize process upsets. Procedures for ensuring that the air pollution control devices and capture systems in the HLW

Vitrification System are properly operated and maintained so as to minimize the emission of air contaminants and process upsets will be established.

**III.10.J.1.a.xxvi** In all future narrative permit submittals, the Permittees will include HLW Vitrification sub-system names with the sub-system designation.

**III.10.J.1.a.xxvii** Modifications to approved design, plans, and specifications in Operating Unit Group 10 of this Permit for the HLW Vitrification System will be allowed only in accordance with Permit Conditions III.10.C.2.e. and f., or III.10.C.2.g., III.10.C.9.d., e., and h.

**III.10.J.1.a.xxviii** For any portion of the HLW Vitrification System that has the potential for formation and accumulation of hydrogen gases, the Permittees will operate the portion to maintain hydrogen levels below the lower explosive limit [WAC 173-303-815(2)(b)(ii)].

**III.10.J.1.a.xxix** For each HLW Vitrification System sub-system holding dangerous waste which are acutely or chronically toxic by inhalation, the Permittees will operate the system to prevent escape of vapors, fumes or other emissions into the air [WAC 173-303-806(4)(i)(i)(B) and WAC 173-303-640(5)(e) in accordance with WAC 173-303-680].

**III.10.J.1.b** Performance Standards

**III.10.J.1.b.i** The HLW Vitrification System must achieve a destruction and removal efficiency (DRE) of 99.99% for the principal organic dangerous constituents (PODCs) listed below [40 CFR §63.1203(c)(1) and 40-CFR 63.1203(c)(2), in accordance with WAC 173-303-680(2)].

RESERVED

DRE in this Permit condition will be calculated in accordance with the formula given below:

DRE=[1-(Wout/Win)] x 100%

Where:

Win=mass feed rate of one principal organic dangerous constituent (PODC) in a waste feed stream; and

Wout=mass emission rate of the same PODC present in exhaust emissions prior to release to the atmosphere.

**III.10.J.1.b.ii** Particulate matter emissions from the HLW Vitrification System will not exceed 34 mg/dscm (0.015 grains/dscf) [40 CFR §63.1203(b)(7), in accordance with WAC 173-303-680(2)]:

**III.10.J.1.b.iii** Hydrochloric acid and chlorine gas emissions from the HLW Vitrification System will not exceed 21 ppmv, combined [40 CFR §63.1203(b)(6), in accordance with WAC 173-303-680(2)]:

**III.10.J.1.b.iv** Dioxin and Furan TEQ emissions from the HLW Vitrification System will not exceed 0.2 nanograms (ng)/dscm [40 CFR §63.1203(b)(1), in accordance with WAC 173-303-680(2)]:

**III.10.J.1.b.v** Mercury emissions from the HLW Vitrification System will not exceed 45 µg/dscm, [40 CFR §63.1203(b)(2), in accordance with WAC 173-303-680(2)].

**III.10.J.1.b.vi** Lead and cadmium emissions from the HLW Vitrification System will not exceed 120 µg/dscm, combined [40 CFR §63.1203(b)(3), in accordance with WAC 173-303-680(2)].

**III.10.J.1.b.vii** Arsenic, beryllium, and chromium emissions from the HLW Vitrification System will not exceed 97 µg/dscm, combined [40 CFR §63.1203(b)(4), in accordance with WAC 173-303-680(2)].

**III.10.J.1.b.viii** Carbon monoxide (CO) emission from the HLW Vitrification System will not exceed 100 parts per million (ppm) by volume, over an hourly rolling average (as measured and recorded by the continuous monitoring system), dry [40 CFR §63.1203(b)(5)(i), in accordance with WAC 173-303-680(2)].

**III.10.J.1.b.ix** Hydrocarbon emission from the HLW Vitrification System will not exceed 10 parts per million (ppm) by volume, over an hourly rolling average (as measured and recorded by the continuous monitoring system during demonstration testing required by this Permit), dry basis, and reported as propane [40 CFR §63.1203(b)(5)(ii), in accordance with WAC 173-303-680(2)]:

**III.10.J.1.b.x** If the emissions from the HLW Vitrification System exceed the emission rates listed in Permit Table III.10.J.E, as approved pursuant to Permit Condition III.10.C.11.b., the Permittees will notify Ecology, in accordance with Permit Condition III.10.J.3.d.vii. [WAC 173-303-680(2) and (3), and WAC 173-303-815(2)(b)(ii)].

The emission limits specified in Permit Conditions III.10.J.1.b.i. through III.10.J.1.b.ix. above, will be met for the HLW Vitrification System by limiting feed rates as specified in Permit Tables III.10.J.D and III.10.J.F, as approved/modified pursuant to Permit Condition III.10.J.5., compliance with operating conditions specified in Permit Condition III.10.J.1.c. (except as specified in Permit Condition III.10.J.1.b.xii.), and compliance with Permit Condition III.10.J.1.b.xi.

**III.10.J.1.b.xi** Treatment effectiveness, feed-rates and operating rates for dangerous and mixed waste management units contained in the HLW Building, but not included in Permit Table III.10.J.A, as approved/modified pursuant to Permit Condition III.10.J.5., will be as specified in Permit Sections III.10.D, III.10.E, III.10.F and consistent with assumptions and basis which are reflected in Operating Unit Group 10, Appendix 6.3 of this Permit, as approved pursuant to Permit Condition III.10.C.11.b. For the purposes of this permit condition, Operating Unit Group 10, Appendix 6.3 will be superseded by Appendix 6.4 upon its approval pursuant to either Permit Conditions III.10.C.11.c. or III.10.C.11.d. [WAC 173-303-680(2) and (3), and WAC 173-303-815(2)(b)(ii)].

**III.10.J.1.b.xii** Except during periods of HLW Vitrification System startup and shutdown, compliance with the operating conditions specified in Permit Condition III.10.J.1.c., will be regarded as compliance with the required performance standards identified in Permit Conditions III.10.J.1.b.i. through x. However, if it is determined that during the effective period of this Permit that compliance with the operating conditions in Permit Condition III.10.J.1.c. is not sufficient to ensure compliance with the performance standards specified in Permit Conditions III.10.J.1.b.i. through x., the Permit may be modified, revoked, or reissued pursuant to Permit Conditions III.10.C.2.e. and III.10.C.2.f., or III.10.C.2.g.

**III.10.J.1.c** Operating Conditions [WAC-303-670(6), in accordance with WAC 173-303-680(2) and (3)].

The Permittees will operate the HLW Vitrification System in accordance with Operating Unit Group 10, Chapter 4 of this Permit, as updated pursuant to Permit Condition III.10.J.5.e.vi., and Operating Unit Group 10, Appendix 10.18 of this Permit, as approved pursuant to Permit Condition III.10.J.5.e., and Operating Unit Group 10, Appendix 10.15 of this Permit, as approved pursuant to Permit Condition III.10.J.5.f., except as modified pursuant to Permit Conditions III.10.J.1.b.xii., III.10.J.2., III.10.J.3., III.10.J.4., and in accordance with the following:

**III.10.J.1.c.i** The Permittees will operate the HLW Vitrification System in order to maintain the systems and process parameters listed in Permit Tables III.10.J.C and III.10.J.F, as approved/modified pursuant to Permit Condition III.10.J.5., within the set-points specified in Permit Table III.10.J.F.

**III.10.J.1.c.ii** The Permittees will operate the AWFCO systems, specified in Permit Table III.10.J.F, as approved/modified pursuant to Permit Condition III.10.J.5., to automatically cut-off and/or lock-out the dangerous and mixed waste feed to the HLW Vitrification System when the monitored operating conditions deviate from the set-points specified in Permit Table III.10.J.F.

**III.10.J.1.c.iii** The Permittees will operate the AWFCO systems, specified in Permit Table III.10.J.F, as approved/modified pursuant to Permit Condition III.10.J.5., to automatically cut-off and/or lock-out the dangerous and mixed waste feed to the HLW Vitrification System when all instruments specified on Permit Table III.10.H.F for measuring the monitored parameters fails or exceeds its span value

**III.10.J.1.c.iv** The Permittees will operate the AWFCO systems, specified in Permit Table III.10.J.F, as approved/modified pursuant to Permit Condition III.10.J.5., to automatically cut-off and/or lock out the dangerous and/or mixed waste feed to the HLW Vitrification System when any portion of the HLW Vitrification System is bypassed. The terms “bypassed” and “bypass event” as used in Permit Sections III.10.J and III.10.K will mean if any portion of the HLW Vitrification System is bypassed so that gases are not treated as during the Demonstration Test.

**III.10.J.1.c.v** In the event of a malfunction of the AWFCO systems listed in Permit Table III.10.J.F, as approved/modified pursuant to Permit Condition III.10.J.5., the Permittees will immediately, manually cut-off the dangerous and mixed waste feed to the HLW Vitrification System. The Permittees will not restart the dangerous and/or mixed waste feed until the problem causing the malfunction has been identified and corrected.

**III.10.J.1.c.vi** The Permittees will manually cut-off the dangerous and mixed waste feed to the HLW Vitrification System when the operating conditions deviate from the limits specified in Permit Condition III.10.J.1.c.i., unless the deviation automatically activates the waste feed cut-off sequence specified in Permit Conditions III.10.J.1.c.ii., III.10.J.1.c.iii., and/or III.10.J.1.c.iv.

**III.10.J.1.c.vii** If greater than thirty (30) dangerous and mixed waste feed cut-offs, combined, to the HLW Vitrification System occur due to deviations from Permit Table III.10.J.F, as approved/modified pursuant to Permit Condition III.10.J.5., within a sixty (60) day period, the Permittees will submit a written report to Ecology within five (5) calendar days of the thirty-first exceedance including the information specified below. These dangerous and mixed waste feed cut-offs to the HLW Vitrification System, whether automatically or manually activated, are counted if the specified set-points are deviated from while dangerous waste, mixed waste, and waste residues continue to

be processed in the HLW Vitrification System. A cascade event is counted at a frequency of one (1) towards the first waste feed cut-off parameter, specified on Permit Table III.10.J.F, from which the set-point is deviated:

A. The parameter(s) that deviated from the set-point(s) in Permit Table III.10.J.F.

B. The magnitude, dates, and duration of the deviations.

C. Results of the investigation of the cause of the deviations.

D. Corrective measures taken to minimize future occurrences of the deviations.

**III.10.J.1.c.viii** If any portion of the HLW Vitrification System is bypassed while treating dangerous and/or mixed waste, it will be regarded as non-compliance with the operating conditions specified in Permit Condition III.10.J.1.c. and the performance standards specified in Permit Condition III.10.J.1.b. After such a bypass event, the Permittees will perform the following actions:

A. Investigate the cause of the bypass event.

B. Take appropriate corrective measures to minimize future bypasses.

C. Record the investigation findings and corrective measures in the operating record.

D. Submit a written report to Ecology within five (5) days of the bypass event documenting the result of the investigation and corrective measures.

**III.10.J.1.c.ix** The Permittees will control fugitive emissions from the HLW Vitrification System by maintaining the melter under negative pressure.

**III.10.J.1.c.x** Except during periods of HLW Vitrification System startup and shutdown, compliance with the operating conditions specified in Permit Condition III.10.J.1.c. will be regarded as compliance with the required performance standards identified in Permit Condition III.10.J.1.b. However, evidence that compliance with these operating conditions is insufficient to ensure compliance with the performance standards, will justify modification, revocation, or re-issuance of this Permit, in accordance with Permit Conditions III.10.C.2.e. and III.10.C.2.f., or III.10.C.2.g.

**III.10.J.1.d** Inspection Requirements [WAC 173-303-680(3)].

**III.10.J.1.d.i** The Permittees will inspect the HLW Vitrification System in accordance with the Inspection Plan in Operating Unit Group 10, Chapter 6A of this Permit, as modified in accordance with Permit Condition III.10.C.5.c.

**III.10.J.1.d.ii** The inspection data for HLW Vitrification System will be recorded, and the records will be placed in the WTP Unit operating record for the HLW Vitrification System, in accordance with Permit Condition III.10.C.4.

**III.10.J.1.d.iii** The Permittees will comply with the inspection requirements specified in Operating Unit Group 10, Appendix 10.15 of this Permit, as approved pursuant to Permit Condition III.10.J.5.f., and as modified by Permit Conditions III.10.J.1.b.xii., III.10.J.2., III.10.J.3., and III.10.J.4.

**III.10.J.1.e** Monitoring Requirements [WAC 173-303-670(5), WAC 173-303-670(6), WAC 173-303-670(7), and WAC 173-303-807(2), in accordance with WAC 173-303-680(3)]

**III.10.J.1.e.i** Upon receipt of a written request from Ecology, the Permittees will perform sampling and analysis of the dangerous and mixed waste and exhaust emissions to verify that

the operating requirements established in the Permit achieve the performance standards delineated in this Permit.

**III.10.J.1.e.ii** The Permittees will comply with the monitoring requirements specified in Operating Unit Group 10, Appendices 10.2, 10.3, 10.7, 10.13, 10.15, and 10.18 of this Permit, as approved pursuant to Permit Conditions III.10.J.5.c., III.10.J.5.d., III.10.J.5.e., and III.10.J.5.f., as modified by Permit Conditions III.10.J.1.b.xii., III.10.J.2., III.10.J.3., and III.10.J.4.

**III.10.J.1.e.iii** The Permittees will operate, calibrate, and maintain the carbon monoxide and hydrocarbon continuous emission monitors (CEM) specified in this Permit in accordance with Performance Specification 4B and 8A of 40 CFR Part 60, Appendix B, in accordance with Appendix to Subpart EEE of 40 CFR Part 63, and Operating Unit Group 10 Appendix 10.15 of this Permit, as approved pursuant to Permit Condition III.10.J.5.f., and as modified by Permit Conditions III.10.J.1.b.xii., III.10.J.2., III.10.J.3., and III.10.J.4.

**III.10.J.1.e.iv** The Permittees will operate, calibrate, and maintain the instruments specified on Permit Tables III.10.J.C and F, as approved/modified pursuant to Permit Condition III.10.J.5., in accordance with Operating Unit Group 10, Appendix 10.15 of this Permit, as approved pursuant to Permit Condition III.10.J.5.f., and as modified by Permit Conditions III.10.J.1.b.xii., III.10.J.2., III.10.J.3., and III.10.J.4.

**III.10.J.1.f** Recordkeeping Requirements [WAC 173-303-380 and WAC 173-303-680(3)]

**III.10.J.1.f.i** The Permittees will record and maintain in the WTP Unit operating record for the HLW Vitrification System, all monitoring, calibration, maintenance, test data, and inspection data compiled under the conditions of this Permit, in accordance with Permit Conditions III.10.C.4. and III.10.C.5., as modified by Permit Conditions III.10.J.1.b.xii., III.10.J.2., III.10.J.3., and III.10.J.4.

**III.10.J.1.f.ii** The Permittees will record in the WTP Unit operating record the date, time, and duration of all automatic waste feed cut-offs and/or lockouts, including the triggering parameters, reason for the deviation, and recurrence of the incident. The Permittees will also record all incidents of AWFCO system function failures, including the corrective measures taken to correct the condition that caused the failure.

**III.10.J.1.f.iii** The Permittees will submit to Ecology a report semi-annually the first calendar year, and annually thereafter each calendar year within ninety (90) days following the end of the year. The report will include the following information:

A. Total dangerous and mixed waste feed processing time for the HLW Vitrification System.

B. Date/Time of all HLW Vitrification System startups and shutdown.

C. Date/Time/Duration/Cause/Corrective Action taken for all HLW Vitrification System shutdowns caused by malfunction of either process or control equipment.

D. Date/Time/Duration/Cause/Corrective Action taken for all instances of dangerous and/or mixed waste feed cut-off due to deviations from Permit Table III.10.J.F, as approved/modified pursuant to Permit Condition III.10.J.5.

**III.10.J.1.f.iv** The Permittees will submit an annual report to Ecology each calendar year within ninety (90) days following the end of the year of all quarterly CEM Calibration Error

and Annual CEM Performance Specification Tests conducted in accordance with Permit Condition III.10.J.1.e.iii.

**III.10.J.1.g** Closure

The Permittees will close the HLW Vitrification System in accordance with Operating Unit Group 10, Addendum H of this Permit, as approved pursuant to Permit Condition III.10.C.8.

**III.10.J.2 Shakedown Period [WAC 173-303-670(5), WAC 173-303-670(6), WAC 173-303-670(7), and WAC 173-303-807(2), in accordance with WAC 173-303-680(2) and (3)].**

**III.10.J.2.a** The shakedown period for the HLW Vitrification System will be conducted in accordance with Permit Condition III.10.J.1., Operating Unit Group 10, Appendix 10.15 of this Permit, as approved pursuant to Permit Condition III.10.J.5.f., and as modified in accordance with Permit Conditions III.10.J.1.b.xii., III.10.J.2., and III.10.J.3.

**III.10.J.2.b** Duration of the Shakedown Period

**III.10.J.2.b.i** The shakedown period for the HLW Vitrification System will begin with the initial introduction of dangerous waste in the HLW Vitrification System following construction and will end with the start of the demonstration test.

**III.10.J.2.b.ii** The shakedown period will not exceed the following limits, as defined by hours of operation, when the HLW Vitrification System is processing dangerous waste. The Permittees may petition Ecology for one (1) extension of each shakedown phase for seven hundred and twenty (720) additional operating hours in accordance with permit modification procedures specified in Permit Conditions III.10.C.2.e. and III.10.C.2.f.

Shakedown Phase 1: 720 hours

Shakedown Phase 2: 720 hours

**III.10.J.2.b.iii** Shakedown Phase 2 will not be commenced until documentation has been submitted to Ecology verifying that the HLW Vitrification System has operated at a minimum of 75% of the shakedown Phase 1 feed-rate limit for two (2) separate eight (8) consecutive hour periods with no AWFCOs.

**III.10.J.2.c** Allowable Waste Feed During the Shakedown Period

**III.10.J.2.c.i** The Permittees may feed the dangerous waste specified for the HLW Vitrification System on the Part A Forms (Operating Unit Group 10, Chapter 1 of this Permit), except for those waste outside the waste acceptance criteria specified in the WAP, Operating Unit Group 10, Chapter 3 of this Permit, as approved pursuant to Permit Condition III.10.C.3., except Permit Conditions III.10.J.2.c.ii. through v. also apply.

**III.10.J.2.c.ii** The Permittees will not feed the following waste to the HLW Vitrification System during Shakedown Phase 1:

A. Acutely toxic dangerous waste listed in WAC 173-303-081(a)(2)(a)(i).

B. Mixed waste

**III.10.J.2.c.iii** The Permittees will not feed the following waste to the HLW Vitrification System during Shakedown Phase 2:

A. Mixed waste

**III.10.J.2.c.iv** The feed-rates to the HLW Vitrification System will not exceed the limits in Permit Tables III.10.J.D and III.10.J.F, as approved/modified pursuant to Permit Condition III.10.J.5.

**III.10.J.2.c.v** The Permittees will conduct sufficient analysis of the dangerous waste treated in the HLW Vitrification System to verify that the waste feed is within the physical and chemical composition limits specified in this Permit.

**III.10.J.3 Demonstration Test Period [WAC 173-303-670(5), WAC 173-303-670(6), WAC 173-303-670(7), and WAC 173-303-807(2), in accordance with WAC 173-303-680(2) and (3)]**

**III.10.J.3.a** Demonstration Test Period

**III.10.J.3.a.i** The Permittees will operate, monitor, and maintain the HLW Vitrification System as specified in Permit Condition III.10.J.1., and Operating Unit Group 10, Appendix 10.15 of this Permit, as approved pursuant to Permit Condition III.10.J.5.f., except as modified in accordance with Permit Conditions III.10.J.1.b.xii. and III.10.J.3.

**III.10.J.3.a.ii** Operating Unit Group 10, Appendix 10.15 of this Permit, as approved pursuant to Permit Condition III.10.J.5.f., will be re-submitted to Ecology for approval by the Permittees as a permit modification pursuant to Permit Conditions III.10.C.2.e. and III.10.C.2.f. at least one hundred and eighty (180) days prior to the start date of the demonstration test. The revised Demonstration Test Plan will include applicable EPA promulgated test methods and procedures in effect at the time of the re-submittal and projected commencement and completion dates for the Demonstration Test.

**III.10.J.3.a.iii** The Permittees will not commence the demonstration test period until documentation has been submitted to Ecology verifying that the HLW Vitrification System has operated at a minimum of 75% of the demonstration test period feed-rate limit for a minimum of an eight (8) consecutive hours period on two (2) consecutive days.

**III.10.J.3.b** Performance Standards

The Permittees will demonstrate compliance with the performance standards specified in Permit Condition III.10.J.1.b. during the Demonstration Test Period.

**III.10.J.3.c** Allowable Waste Feed During the Demonstration Test Period

**III.10.J.3.c.i** The Permittees may feed the dangerous waste specified for the HLW Vitrification System in Part A Forms (Operating Unit Group 10, Chapter 1 of this Permit), except for those waste outside the waste acceptance criteria specified in the WAP, Operating Unit Group 10, Chapter 3 of this Permit, as approved pursuant to Permit Condition III.10.C.3., except Permit Conditions III.10.J.3.c.ii. through iv. also apply.

**III.10.J.3.c.ii** The Permittees will not feed mixed waste to the HLW Vitrification System.

**III.10.J.3.c.iv.** The dangerous waste feed-rates to the HLW Vitrification System will not exceed the limits in Permit Tables III.10.J.D and F, as approved/modified pursuant to Permit Condition III.10.J.5.

**III.10.J.3.c.v.** The Permittees will conduct sufficient analysis of the dangerous waste treated in the HLW Vitrification System to verify that the dangerous waste is within the physical and chemical composition limits specified in this Permit.

**III.10.J.3.d** Demonstration Data Submissions and Certifications

**III.10.J.3.d.i** The Permittees will submit to Ecology a complete demonstration test report within one hundred and eighty (180) calendar days of completion of the Demonstration Test including all data collected during the Demonstration Test and updated Permit Tables III.10.K.D, III.10.K.E, and III.10.K.F.

**III.10.J.3.d.ii** The Permittees must submit the following information to Ecology prior to receiving Ecology's approval to commence feed of dangerous waste and mixed waste to the HLW Vitrification System:

A. The Permittees will submit a summary of data collected as required during the Demonstration Test to Ecology upon completion of the Demonstration Test.

B. A certification that the Demonstration Test has been carried out in accordance with the approved Demonstration Test Plan and approved modifications within thirty (30) days of the completion of the Demonstration Test [WAC 173-303-807(8)].

C. Calculations and analytical data showing compliance with the performance standards specified in Permit Conditions III.10.J.1.b.i, III.10.J.1.b.iv, III.10.J.1.b.v, III.10.J.1.b.vi, and III.10.J.1.b.vii

D. Laboratory data QA/QC summary for the information provided in III.10.J.3.d.ii.C.

**III.10.J.3.d.iii** After successful completion of the Demonstration Test and receipt of Ecology's approval, the Permittees will be authorized to commence feed of dangerous waste and mixed waste to the HLW Vitrification System for the post-demonstration test period indicated in Permit Tables III.10.J.D and F, as approved/modified pursuant to Permit Condition III.10.J.5., in compliance with the operating requirements specified in Permit Condition III.10.J.1.c. and within the limitations specified in Permit Condition.III.10.C.14.

**III.10.J.3.d.iv** RESERVED

**III.10.J.3.d.v** After successful completion of the Demonstration Test, Permittees submittal of the following to Ecology, and Permittees receipt of Ecology approval of the following in writing, the Permittees will be authorized to feed dangerous waste and mixed waste to the HLW Vitrification System pursuant to Permit Section III.10.K.

A. A complete Demonstration Test Report for the HLW Vitrification System and updated Permit Tables III.10.K.D, III.10.K.E, and III.10.K.F, as approved/modified pursuant to Permit Conditions III.10.J.5 and III.10.C.11.c. or III.10.C.11.d., the test report will be certified in accordance with WAC 173-303-807(8), in accordance with WAC 173-303-680(2) and (3).

B. A Final Risk Assessment Report completed pursuant to Permit Conditions III.10.C.11.c. or III.10.C.11.d.

**III.10.J.3.d.vi** If any calculations or testing results show that one or more of the performance standards listed in Permit Condition III.10.J.1.b., with the exception of Permit Condition III.10.J.1.b.x., for the HLW Vitrification System were not met during the Demonstration Test, the Permittees will perform the following actions:

A. Immediately stop dangerous and mixed waste feed to the HLW Vitrification System under the mode of operation that resulted in not meeting the performance standard(s).

B. Verbally notify Ecology within twenty-four (24) hours of discovery of not meeting the performance standard(s) as specified in Permit Condition I.E.21.

C. Investigate the cause of the failure and submit a report of the investigation findings to Ecology within fifteen (15) days of discovery of not meeting the performance standard(s).

D. Submit to Ecology within fifteen (15) days of discovery of not meeting the performance standard(s), documentation supporting a mode of operation where all performance standards listed in Permit Condition III.10.J.1.b., with the exception of Permit Condition III.10.J.1.b.x., for the HLW Vitrification System were met during the demonstration test, if any such mode was demonstrated.

E. Based on the information provided to Ecology by the Permittees, pursuant to Permit Conditions III.10.J.3.d.vi.A through D above, and any additional information, Ecology may provide, in writing, direction to the Permittees to stop dangerous and/or mixed waste feed to the LAW Vitrification System and/or amend the mode of operation the Permittees are allowed to continue operations prior to Ecology approval of a compliance schedule and/or revised Demonstration Test Plan, pursuant to Permit Conditions III.10.J.3.d.vi.F and G.

F. If the performance standard listed in Permit Condition III.10.J.1.b.i. was not met during the Demonstration Test, the Permittees will submit within one hundred and twenty (120) days of discovery of not meeting the performance standard, a revised Demonstration Test Plan (if appropriate) and a compliance schedule for Ecology approval to address this deficiency. If a revised Demonstration Test Plan is submitted, it will be accompanied by a request for approval to retest as a permit modification pursuant to Permit Conditions III.10.C.2.e. and III.10.C.2.f. The revised Demonstration Test Plan (if submitted) must include substantive changes to prevent failure from reoccurring.

G. If any of the performance standards listed in Permit Condition III.10.J.1.b., with the exception of Permit Conditions III.10.J.1.b.i. or III.10.J.1.b.x., were not met during the Demonstration Test, the Permittees will submit to Ecology within one hundred and twenty (120) days of discovery of not meeting the performance standard(s), a revised Demonstration Test Plan requesting approval to retest as a permit modification pursuant to Permit Conditions III.10.C.2.e. and III.10.C.2.f. The revised Demonstration Test Plan must include substantive changes to prevent failure from reoccurring.

**III.10.J.3.d.vii** If any calculations or testing results show that any emission rate for any constituent listed in Permit Table III.10.J.E, as approved pursuant to Permit Condition III.10.C.11.b., is exceeded for HLW Vitrification System during the Demonstration Test, the Permittees will perform the following actions:

A. Verbally notify Ecology within twenty-four (24) hours of the discovery of exceeding the emission rate(s) as specified in Permit Condition I.E.21.

B. Submit to Ecology additional risk information to indicate that the increased emissions impact is offset by decreased emission impact from one or more constituents expected to be emitted at the same time, and/or investigate the cause and impact of the exceedance of the emission rate(s) and submit a report of the investigation findings to Ecology within fifteen (15) days of the discovery of exceeding the emission rate(s).

C. Based on the notification and any additional information, Ecology may provide, in writing, direction to the Permittees to stop dangerous and/or mixed waste feed

to the HLW Vitrification System and/or to submit a revised Demonstration Test Plan as a permit modification pursuant to Permit Conditions III.10.C.2.e. and III.10.C.2.f., or III.10.C.2.g. The revised Demonstration Test Plan must include substantive changes to prevent failure from reoccurring.

**III.10.J.4 Post-Demonstration Test Period [WAC 173-303-670(5), WAC 173-303-670(6), and WAC 173-303-807(2), in accordance with WAC 173-303-680(2) and (3)].**

**III.10.J.4.a** The Permittees will operate, monitor, and maintain the HLW Vitrification System as specified in Permit Condition III.10.J.1. and Operating Unit Group 10, Appendix 10.15 of this Permit, as approved pursuant to Permit Condition III.10.J.5., except as modified in accordance with Permit Conditions III.10.J.1.b.xii., III.10.J.3., and III.10.J.4.

**III.10.J.4.b** Allowable Waste Feed During the Post-Demonstration Test Period

**III.10.J.4.b.i** The Permittees may feed the dangerous and/or mixed waste specified for the HLW Vitrification System on the Part A Forms (Operating Unit Group 10, Chapter 1 of this Permit), except for those waste outside the waste acceptance criteria specified in the WAP, Operating Unit Group 10, Chapter 3 of this Permit, as approved pursuant to Permit Condition III.10.C.3., and except Permit Conditions III.10.J.4.b.ii. and III.10.J.4.b.iii. also apply.

**III.10.J.4.b.ii** The dangerous waste and mixed waste feed rates to the HLW Vitrification System will not exceed the limits in Permit Tables III.10.J.D and F, as approved/modified pursuant to Permit Condition III.10.J.5., or in Permit Condition III.10.J.3.

**III.10.J.4.b.iii** The Permittees will conduct sufficient analysis of the dangerous waste and mixed waste treated in HLW Vitrification System to verify that the waste feed is within the physical and chemical composition limits specified in this Permit.

**III.10.J.5 Compliance Schedules**

**III.10.J.5.a** All information identified for submittal to Ecology in a. through f. of this compliance schedule must be signed and certified in accordance with requirements in WAC 173-303-810(12), as modified in accordance with Permit Condition III.10.J.1.a.iii. [WAC 173-303-806(4)].

**III.10.J.5.b** The Permittees will submit to Ecology, pursuant to Permit Condition III.10.C.9.f., prior to construction of each secondary containment and leak detection system for the HLW Vitrification System (per level) as identified in Permit Tables III.10.J.A and III.10.J.B, engineering information as specified below, for incorporation into Operating Unit Group 10, Appendices 10.2, 10.4, 10.5, 10.7, 10.8, 10.9, 10.11, and 10.12 of this Permit. At a minimum, engineering information specified below will show the following as described in WAC 173-303-640, in accordance with WAC 173-303-680 (the information specified below will include dimensioned engineering drawings and information on sumps and floor drains):

**III.10.J.5.b.i** IQRPE Reports (specific to foundation, secondary containment, and leak detection system) will include review of design drawings, calculations, and other information on which the certification report is based and will include, but not limited to, review of such information described below. Information (drawings, specifications, etc.) already included in Operating Unit Group 10, Appendix 10.0 of this Permit, may be included in the report by reference and should include drawing and document numbers. IQRPE Reports will be consistent with the information separately provided

in ii. through ix. below [WAC 173-303-640(3)(a), in accordance with WAC 173-303-680 and WAC 173-303-806(4)(i)(i )];

**III.10.J.5.b.ii** Design drawings (General Arrangement Drawings, plan) and specifications for the foundation, secondary containment including liner installation details, and leak detection methodology. These items should show the dimensions, volume calculations, and location of the secondary containment system, and should include items such as floor/pipe slopes to sumps, tanks, floor drains [WAC 173-303-640(4)(b) through (f) and WAC 173-303-640(3)(a), in accordance with WAC 173-303-680 and WAC 173-303-806(4)(i)(i)];

**III.10.J.5.b.iii** The Permittees will provide the design criteria (references to codes and standards, load definitions, and load combinations, materials of construction, and analysis/design methodology) and typical design details for the support of the secondary containment system. This information will demonstrate the foundation will be capable of providing support to the secondary containment system, resistance to pressure gradients above and below the system, and capable of preventing failure due to settlement, compression, or uplift [WAC 173-303-640(4)(c)(ii), in accordance with WAC 173-303-680(2) and WAC 173-303-806(4)(i)(i)(B)];

**III.10.J.5.b.iv** A description of materials and equipment used to provide corrosion protection for external metal components in contact with soil, including factors affecting the potential for corrosion [WAC 173-303-640(3)(a)(iii)(B), in accordance with WAC 173-303-680 and WAC 173-303-806(4)(i)(i)(A) through (B)];

**III.10.J.5.b.v** Secondary containment/foundation, and leak detection system, materials selection documentation (including, but not limited to, concrete coatings and water stops, and liner materials), as applicable [WAC 173-303-806(4)(i)(i)(A) through (B)];

**III.10.J.5.b.vi** Detailed description of how the secondary containment for the HLW Vitrification System will be installed in compliance with WAC 173-303-640(3)(c), in accordance with WAC 173-303-680 and WAC 173-303-806(4)(i)(i)(A) through (B);

**III.10.J.5.b.vii** Submit Permit Tables III.10.J.B and III.10.K.B completed to provide for all secondary containment sumps and floor drains the information, as specified in each column heading consistent with information to be provided in i. through vi., above;

**III.10.J.5.b.viii** Documentation that secondary containment and leak detection systems will not accumulate hydrogen gas levels above the lower explosive limit for incorporation into the Administrative Record [WAC 173-303-680, WAC 173-303-806(4)(i)(i)(A), and WAC 173-303-806(4)(i)(v)];

**III.10.J.5.b.ix** A detailed description of how HLW Vitrification System design provides access for conducting future HLW Vitrification System integrity assessments [WAC 173-303-640(3)(b) and WAC 173-303-806(4)(i)(i)(B)].

**III.10.J.5.c** The Permittees will submit to Ecology pursuant to Permit Condition III.10.C.9.f., prior to installation of each sub-system as identified in Permit Table III.10.J.A, engineering information as specified below, for incorporation into Operating Unit Group 10, Appendices 10.1 through 10.14 and 10.17 of this Permit. At a minimum, engineering information specified below will show the following, as required pursuant to WAC 173-303-640, in accordance with WAC 173-303-680 (the information specified below will include dimensioned engineering drawings):

**III.10.J.5.c.i** IQRPE Reports (specific to sub-system) will include review of design drawings, calculations, and other information on which the certification report is based and will

include as applicable, but not limited to, review of such information described below. Information (drawings, specifications, etc.) already included in Operating Unit Group 10, Appendix 10.0 of this Permit, may be included in the report by reference and should include drawing and document numbers. The IQRPE Reports will be consistent with the information separately provided in ii. through xii. below and the IQRPE Report specified in Permit Condition III.10.J.5.b. [WAC 173-303-640(3)(a), in accordance with WAC 173-303-680(2) and WAC 173-303-806(4)(i)(i)];

**III.10.J.5.c.ii** Design drawings [General Arrangement Drawings in plan, Process Flow Diagrams, Piping and Instrumentation Diagrams, (including pressure control systems), Mechanical Drawings, and specifications, and other information specific to subsystems (to show location and physical attributes of each subsystem specific to miscellaneous units)] [WAC 173-303-640(3)(a), in accordance with WAC 173-303-680(2) and WAC 173-303-806(4)(i)(i)];

**III.10.J.5.c.iii** Sub-system design criteria (references to codes and, standards, load definitions, and load combinations, materials of construction, and analysis/design methodology) and typical design details to support the sub-systems. Structural support calculations specific to off-specification, non-standard, and field-fabricated subsystems will be submitted for incorporation into the Administrative Record. Documentation will include, but not be limited to, supporting specifications (test data, treatment effectiveness report, etc.), supporting projected operational capability (e.g., WESP projected removal efficiency for individual metals, halogens, particulates, etc.), and compliance with performance standards specified in Permit Condition III.10.J.1.b [WAC 173-303-640(3)(a), in accordance with WAC 173-303-680(2) and WAC 173-303-806(4)(i)(i)(B)];

**III.10.J.5.c.iv** A description of materials and equipment used to provide corrosion protection for external metal components in contact with water, including factors affecting the potential for corrosion [WAC 173-303-640(3)(a)(iii)(B), in accordance with WAC 173-303-680(2) and WAC 173-303-806(4)(i)(i)(A) through (B)];

**III.10.J.5.c.v** Sub-system materials selection documentation (e.g., physical and chemical tolerances) [WAC 173-303-640(3)(a), in accordance with WAC 173-303-680(2) and WAC 173-303-806(4)(i)(i)(A)];

**III.10.J.5.c.vi** Sub-system vendor information (including, but not limited to, required performance warranties, as available), consistent with information submitted under ii. above, will be submitted for incorporation into the Administrative Record WAC 173-303-640(3)(a), in accordance with WAC 173-303-680(2), WAC 173-303-806(4)(i)(i)(A) through (B), and WAC 173-303-806(4)(i)(v)];

**III.10.J.5.c.vii** System descriptions related to sub-system units will be submitted for incorporation into the Administrative Record [WAC 173-303-680, WAC 173-303-806(4)(i)(i)(A) through (B), and WAC 173-303-806(4)(i)(v)];

**III.10.J.5.c.viii** Mass and energy balance for normal projected operating conditions used in developing the Piping and Instrumentation Diagrams and Process Flow Diagrams, including assumptions and formulas used to complete the mass and energy balance, so that they can be independently verified for incorporation into the Administrative

Record [WAC 173-303-680(2), WAC 173-303-806(4)(i)(i)(B), and WAC 173-303-806(4)(i)(v)];

**III.10.J.5.c.ix** Detailed description of all potential HLW Vitrification System bypass events including:

A. A report which includes an analysis of credible potential bypass events and recommendations for prevention/minimization of the potential, impact, and frequency of the bypass event to include at a minimum:

1. Operating procedures
2. Maintenance procedures
3. Redundant equipment
4. Redundant instrumentation
5. Alternate equipment
6. Alternate materials of construction

**III.10.J.5.c.x** A detailed description of how the sub-systems will be installed in compliance with WAC 173-303-640(3)(b), (c), (d), and (e), in accordance with WAC 173-303-680 and WAC 173-303-806(4)(i)(i)(B);

**III.10.J.5.c.xi** Sub-system design to prevent escape of vapors and emissions of acutely or chronically toxic (upon inhalation) EHW, for incorporation into the Administrative Record [WAC 173-303-640(5)(e), in accordance with WAC 173-303-680, (2), and WAC 173-303-806(4)(i)(i)(B)];

**III.10.J.5.c.xii** Documentation that sub-systems are designed to prevent the accumulation of hydrogen gases levels above the lower explosive limit for incorporation into the Administrative Record [WAC 173-303-680, WAC 173-303-806(4)(i)(i)(A), and WAC 173-303-806(4)(i)(v)];

**III.10.J.5.d** The Permittees will submit to Ecology, pursuant to Permit Condition III.10.C.9.f., prior to installation of equipment for each sub-system as identified in Permit Tables III.10.J.A and III.10.J.B, not addressed in Permit Conditions III.10.J.5.b. or III.10.J.5.c., engineering information as specified below, for incorporation into Operating Unit Group 10, Appendices 10.1 through 10.14 of this Permit. At a minimum, engineering information specified below will show the following as required pursuant to in WAC 173-303-640, in accordance with WAC 173-303-680 (the information specified below will include dimensioned engineering drawings):

**III.10.J.5.d.i** IQRPE Reports (specific to sub-system equipment) will include a review of design drawings, calculations, and other information as applicable on which the certification report is based. The reports will include, but not be limited to, review of such information described below. Information (drawings, specifications, etc.) already included in Operating Unit Group 10, Appendix 10.0 of this Permit, may be included in the report by reference and should include drawing and document numbers. The IQRPE Reports will be consistent with the information provided separately in ii. through xiii. below and the IQRPE Reports specified in Permit Conditions III.10.J.5.b. and III.10.J.5.c. [WAC 173-303-640(3)(a), in accordance with WAC 173-303-680(2) and WAC 173-303-806(4)(I)(I)(A) through (B)];

**III.10.J.5.d.ii** Design drawings [Process Flow Diagrams, Piping and Instrumentation Diagrams (including pressure control systems), and specifications, and other information specific to equipment (these drawings should include all equipment such as pipes,

valves, fittings, pumps, instruments, etc.)] [WAC 173-303-640(3)(a), in accordance with WAC 173-303-680(2) and WAC 173-303-806(4)(i)(i)(A) through (B)];

**III.10.J.5.d.iii** Sub-system equipment design criteria (references to codes and standards, load definitions and load combinations, materials of construction, and analysis/design methodology) and typical design details for the support of the sub-system equipment. [WAC 173-303-640(3)(a) and WAC 173-303-640(3)(f), in accordance with WAC 173-303-680 and WAC 173-303-806(4)(i)(i)(B)];

**III.10.J.5.d.iv** A description of materials and equipment used to provide corrosion protection for external metal components in contact with soil and water, including factors affecting the potential for corrosion [WAC 173-303-640(3)(a)(iii)(B), in accordance with WAC 173-303-680(2) and WAC 173-303-806(4)(i)(i)(A)];

**III.10.J.5.d.v** Materials selection documentation for equipment for each sub-system (e.g., physical and chemical tolerances) [WAC 173-303-640(3)(a), in accordance with WAC 173-303-680(2) and WAC 173-303-806(4)(i)(i)(A)];

**III.10.J.5.d.vi** Vendor information (including, but not limited to, required performance warranties, as available), consistent with information submitted under ii. above, for sub-system equipment will be submitted for incorporation into the Administrative Record [WAC 173-303-640(3)(a), in accordance with WAC 173-303-680(2), WAC 173-303-806(4)(i)(i)(A) through (B), and WAC 173-303-806(4)(i)(iv)];

**III.10.J.5.d.vii** Sub-system, sub-system equipment, and leak detection system instrument control logic narrative description (e.g., descriptions of fail-safe conditions, etc.) [WAC 173-303-680(2), WAC 173-303-806(4)(i)(i)(B), and WAC 173-303-806(4)(i)(v)];

**III.10.J.5.d.viii** System description related to sub-system equipment, and system descriptions related to leak detection systems, for incorporation into the Administrative Record [WAC 173-303-680, WAC 173-303-806(4)(i)(i)(A) through (B), and WAC 173-303-806(4)(i)(v)];

**III.10.J.5.d.ix** A detailed description of how the sub-system equipment will be installed and tested [WAC 173-303-640(3)(c) through (e) and WAC 173-303-640(4)(b) and (c), in accordance with WAC 173-303-680 and WAC 173-303-806(4)(i)(i)(B)];

**III.10.J.5.d.x** For process monitoring, control, and leak detection system instrumentation for the HLW Vitrification System as identified in Permit Tables III.10.J.C. and III.10.J. F., a detailed description of how the process monitoring, control, and leak detection system instrumentation will be installed and tested [WAC 173-303-640(3)(c) through (e), WAC 173-303-640(4)(b) and (c), WAC 173-303-806(4)(c)(vi), and WAC 173-303-806(4)(i)(i)(B)];

**III.10.J.5.d.xi** Mass and energy balance for projected normal operating conditions used in developing the Piping and Instrumentation Diagrams and Process Flow Diagrams, including assumptions and formulas used to complete the mass and energy balance, so that they can be independently verified, for incorporation into the Administrative Record [WAC 173-303-680(2), WAC 173-303-806(4)(i)(i)(B), and WAC 173-303-806(4)(i)(v)];

**III.10.J.5.d.xii** Documentation that sub-systems equipment are designed to prevent the accumulation of hydrogen gas levels above the lower explosive limit into the Administrative Record [WAC 173-303-680, WAC 173-303-806(4)(i)(i)(A), and WAC 173-303-806(4)(i)(v)] [WAC 173-303-815(2)(b)(ii)];

**III.10.J.5.d.xiii** Leak Detection system documentation (e.g. vendor information etc.) consistent with information submitted under Permit Condition III.10.J.5.c.ii. and Permit Conditions III.10.J.5.d.ii., vii., viii., and x. above, will be submitted for incorporation into the Administrative Record.

**III.10.J.5.e** Prior to initial receipt of dangerous and/or mixed waste in the WTP Unit, the Permittees will submit to Ecology, pursuant to Permit Condition III.10.C.9.f., the following as specified below for incorporation into Operating Unit Group 10, Appendix 10.18 of this Permit, except Permit Condition III.10.J.5.e.i., which will be incorporated into Operating Unit Group 10, Addendum E of this Permit. All information provided under this permit condition must be consistent with information provided pursuant to Permit Conditions III.10.J.5.b., c., d., e., and f., III.10.C.3.e.v., and III.10.C.11.b., as approved by Ecology:

**III.10.J.5.e.i** Integrity assessment program and schedule for the HLW Vitrification System will address the conducting of periodic integrity assessments on the HLW Vitrification System over the life of the system, as specified in Permit Condition III.10.J.5.b.ix. and as specified in WAC 173-303-640(3)(b), in accordance with WAC 173-303-680, and descriptions of procedures for addressing problems detected during integrity assessments. The schedule must be based on past integrity assessments, age of the system, materials of construction, characteristics of the waste, and any other relevant factors [WAC 173-303-640(3)(b), in accordance with WAC 173-303-680 and WAC 173-303-806(4)(i)(i)(B)];

**III.10.J.5.e.ii** Detailed plans and descriptions, demonstrating the leak detection system is operated so that it will detect the failure of either the primary or secondary containment structure or the presence of any release of dangerous and/or mixed waste or accumulated liquid in the secondary containment system within twenty-four (24) hours [WAC 173-303-640(4)(c)(iii)]. Detection of a leak of at least 0.1 gallons per hour within twenty-four (24) hours is defined as being able to detect a leak within twenty-four (24) hours. Any exceptions to this criteria must be approved by Ecology in accordance with WAC 173-303-680, WAC 173-303-640(4)(c)(iii), and WAC 173-303-806(4)(i)(i)(b);

**III.10.J.5.e.iii** Detailed operational plans and descriptions, demonstrating that spilled or leaked waste and accumulated precipitation liquids can be removed from the secondary containment system within twenty-four (24) hours [WAC 173-303-806(4)(i)(i)(B)];

**III.10.J.5.e.iv** Descriptions of operational procedures demonstrating appropriate controls and practices are in place to prevent spills and overflows from the HLW Vitrification System or containment systems in compliance with WAC 173-303-640(5)(b)(i) through (iii), in accordance with WAC 173-303-680 and WAC 173-303-806(4)(i)(i)(B);

**III.10.J.5.e.v** Description of procedures for investigation and repair of the HLW Vitrification System [WAC 173-303–640(6) and WAC 173-303-640(7)(e) and (f), in accordance with WAC 173-303-680, WAC 173-303-320, WAC 173-303-806(4)(ia)(iv), and WAC 173-303-806(4)(a)(ii)(B)];

**III.10.J.5.e.vi** Updated Chapter 4, Narrative Description, Tables and Figures as identified in Permit Tables III.10.J.A and III.10.J.B, as modified pursuant to Permit Condition III.10.H.5.e.x. and updated to identify routinely non-accessible LAW Vitrification sub-systems.

**III.10.J.5.e.vii** Description of procedures for management of ignitable and reactive, and incompatible dangerous and/or mixed waste as specified in accordance with

WAC 173-303-640(9) and (10), in accordance with WAC 173-303-680 and WAC 173-303-806(4)(i)(i)(B).

**III.10.J.5.e.viii** A description of the tracking system used to track dangerous and/or mixed waste generated throughout the HLW Vitrification System, pursuant to WAC 173-303-380.

**III.10.J.5.e.ix** Permit Table III.10.J.C and III.10.K.C will be revised and/or completed for HLW Vitrification System process and leak detection system monitors and instruments (to include, but not be limited to: instruments and monitors measuring and/or controlling flow, pressure, temperature, density, pH, level, humidity, and emissions) to provide the information as specified in each column heading. Process and leak detection system monitors and instruments for critical systems, as specified in Operating Unit Group 10, Appendix 2.0 and as updated pursuant to Permit Condition III.10.C.9.b.and for operating parameters as required to comply with Permit Condition III.10.C.3.e.iii., will be addressed. Process monitors and instruments for non-waste management operations (e.g., utilities, raw chemical storage, non-contact cooling waters, etc.) are excluded from this permit condition [WAC 173-303-680, WAC 173-303-806(4)(i)(i)(A) through (B), and WAC 173-303-806(4)(i)(v)];

**III.10.J.5.e.x** Permit Tables III.10.J.A and III.10.K.A amended as follows [WAC 173-303-680 and WAC 173-303-806(4)(i)(i)(A) through (B)]:

A. Under column 1, update and complete list of dangerous and mixed waste HLW Vitrification System sub-systems, including plant items that comprise each system (listed by item number).

B. Under column 2, update and complete system designations.

C. Under column 3, replace the 'Reserved' with Operating Unit Group 10, Appendix 10.0 sub-sections (e.g., 10.1, 10.2, etc.) designated in Permit Conditions III.10.J.5.b., c., and d. specific to HLW Vitrification System sub-system, as listed in column 1.

D. Under column 4, update and complete list of narrative description, tables, and figures.

**III.10.J.5.f** One hundred and eighty (180) days prior to initial receipt of dangerous and/or mixed waste in the WTP Unit, the Permittees will submit for review and receive approval for incorporation into Operating Unit Group 10, Appendix 10.15 of this Permit, a Demonstration Test Plan for the HLW Vitrification System to demonstrate that the HLW Vitrification Systems meets the performance standards specified in Permit Condition III.10.J.1.b. In order to incorporate the Demonstration Test Plan for the HLW Vitrification System into Operating Unit Group 10, Appendix 10.15, Permit Condition III.10.C.2.g. process will be followed. The Demonstration Test Plan will include, but not be limited to, the following information. The Demonstration Test Plan will also be consistent with the information provided pursuant to Permit Conditions III.10.J.5.b., c., d. and e., III.10.C.3.e.v. and III.10.C.11.b., as approved by Ecology and consistent with the schedule described in Operating Unit Group 10, Appendix 1.0 of this Permit. The documentation required pursuant to Permit Condition III.10.J.5.f.xvi., in addition to being incorporated into Operating Unit Group 10, Appendix 10.15, will be incorporated by reference in Operating Unit Group 10, Addendum E of this Permit.

*Notes: (1) The following should be consulted to prepare this Demonstration Test Plan: "Guidance on Setting Permit Conditions and Reporting Trial Burn Results Volume II of the Hazardous Waste Incineration Guidance Series", and EPA/625/6-89/019 and Risk Burn Guidance For Hazardous Waste Combustion Facilities", EPA-R-01-001, July 2001,*

*WAC 173-303-807(2), WAC 173-303-670(5), WAC-173-303-670(6), 40 CFR §63.1207(f)(2), 40 CFR §63.1209 and Appendix to 40 CFR Part 63 EEE.*

*(2) Cross-referencing to the information provided pursuant to permit Conditions III.H.5.b., c., d., e. and III.10.C.3.e.v., as approved by Ecology, that are redundant to elements of the Demonstration Test Plan for the HLW Vitrification System is acceptable.*

**III.10.J.5.f.i** Analysis of each feed-stream to be fed during the demonstration test, including dangerous waste, glass formers and reductants, process streams (e.g., control air, process air, steam, sparge bubbler air, air in-leakage from melter cave, and gases from HLW Vitrification Vessel Ventilation System, process water, etc.) that includes:

A. Levels of ash, levels of metals, total chlorine (organic and inorganic), other halogens and radionuclide surrogates.

B. Description of the physical form of the feed-streams;

C. An identification and quantification of organics that are present in the feed-stream, including constituents proposed for DRE demonstration;

A comparison of the proposed demonstration test feed streams to the mixed waste feed envelopes to be processed in the melter must be provided that documents that the proposed demonstration test feed streams will serve as worst case surrogates for organic destruction, formation of products of incomplete oxidation, and metals, total chlorine (organic and inorganic), other halogens, particulate formation, and radionuclides;

**III.10.J.5.f.ii** Specification of trial principal organic dangerous constituents (PODCs) for which destruction and removal efficiencies are proposed to be calculated during the demonstration test and for inclusion in Permit Conditions III.10.J.1.b.i. and III.10.K.1.b.i. These trial PODCs will be specified based on destructibility, concentration or mass in the waste and the dangerous waste constituents or constituents in WAC 173-303-9905;

**III.10.J.5.f.iii** A description of the blending procedures, prior to introducing the feed-streams into the melter, including analysis of the materials prior to blending, and blending ratios;

**III.10.J.5.f.iv** A description of how the surrogate feeds are to be introduced for the demonstration. This description should clearly identify the differences and justify how any of differences would impact the surrogate feed introduction as representative of how mixed waste feeds will be introduced;

**III.10.J.5.f.v** A detailed engineering description of the HLW Vitrification System, including:

A. Manufacturer's name and model number for each sub-system.

B. Design capacity of each sub-system including documentation (engineering calculations, manufacturer/vendor specifications, operating data, etc.) supporting projected operational efficiencies (e.g., WESP projected removal efficiency for individual metals, halogens, particulates, etc.) and compliance with performance standards specified in Permit Condition III.10.J.1.b.

C. Detailed scaled engineering drawings, including Process Flow Diagrams, Piping and Instrumentation Diagrams, Vessel Drawings (plan, and elevation with cross sections) and General Arrangement Drawings.

D. Process Engineering Descriptions.

E. Mass and energy balances for each projected operating condition and each demonstration test condition, including assumptions and formulas used to

complete mass and energy balances so that they can be independently verified for incorporation into the Administrative Record.

F. Engineering Specifications/data sheets (materials of construction, physical and chemical tolerances of equipment, equipment performance warranties, and fan curves).

G. Detailed Description of Automatic Waste Feed Cut-off System addressing critical operating parameters for all performance standards specified in Permit Condition III.10.J.1.b.

H. Documentation to support compliance with performance standards specified in Permit Condition III.10.J.1.b., including engineering calculations, test data, and manufacturer/vendor's warranties, etc.

I. Detailed description of the design, operation and maintenance practices for air pollution control system.

J. Detailed description of the design, operation, and maintenance practices of any stack gas monitoring and pollution control monitoring system.

**III.10.J.5.f.vi** Detailed description of sampling and monitoring procedures including sampling and monitoring locations in the system, the equipment to be used, sampling and monitoring frequency, and planned analytical procedures for sample analysis including, but not limited to:

A. A short summary narrative description of each stack sample method should be included within the main body of the demonstration test plan, which references an appendix to the plan that would include for each sampling train: (1) detailed sample method procedures, (2) sampling train configuration schematic, (3) sampling recovery flow sheet, (4) detailed analytical method procedures, and (5) sampling preparation and analysis flow sheet. The detailed procedures should clearly flag where the method has provided decision points (e.g., choices of equipment materials of construction, choices of clean-up procedures or whether additional clean-up procedures will be incorporated, whether pretest surveys or laboratory validation work will be performed, enhancements to train to accommodate high moisture content in stack gas, etc.) and what is being proposed along with the basis for the decision.

B. A short summary narrative description of the feed and residue sampling methods should be included within the main body of the demonstration test plan, which references an appendix that would include for each sample type: (1) detailed sample method procedures, (2) sampling recovery/compositing procedures, and (3) detailed analytical method procedures. The detailed procedures should clearly flag where the method has provided decision points (e.g., choices of equipment materials of construction, choices of clean-up procedures or whether additional clean-up procedures will be incorporated, whether pretest surveys or laboratory validation work will be performed, etc.) and what is being proposed along with the basis for the decision.

**III.10.J.5.f.vii** A detailed test schedule for each condition for which the demonstration test is planned, including projected date(s), duration, quantity of dangerous waste to be fed, and other relevant factors;

**III.10.J.5.f.viii** A detailed test protocol including, for each test condition, the ranges of feed-rate for each feed system, and all other relevant parameters that may affect the ability of the

HLW Vitrification System to meet performance standards specified in Permit Condition III.10.J.1.b.;

**III.10.J.5.f.ix** A detailed description of planned operating conditions for each demonstration test condition, including operating conditions for shakedown, demonstration test, post-demonstration test and normal operations. This information will also include submittal of Permit Tables III.10.J.D, III.10.J.F, III.10.K.D, and III.10.K.F completed with the information as specified in each column heading for each HLW Vitrification System waste feed cut-off parameter and submittal of supporting documentation for Permit Tables III.10.J.D, III.10.J.F, III.10.K.D, and III.10.K.F set-point values.

**III.10.J.5.f.x** The test conditions proposed must demonstrate meeting the performance standards specified in Permit Condition III.10.J.1.b. with the simultaneous operation of the melter at capacity and input from the HLW Vitrification Vessel Ventilation System at capacity to simulate maximum loading to the HLW Vitrification System off-gas treatment system and to establish the corresponding operating parameter ranges.

**III.10.J.5.f.xi** A detailed description of procedures for start-up and shutdown of waste feed and controlling emissions in the event of an equipment malfunction, including off-normal and emergency shutdown procedures;

**III.10.J.5.f.xii** A calculation of waste residence time;

**III.10.J.5.f.xiii** Any request to extrapolate metal feed-rate limits from Demonstration Test levels must include:

A. A description of the extrapolation methodology and rationale for how the approach ensures compliance with the performance standards, as specified in Permit Condition III.10.J.1.b.

B. Documentation of the historical range of normal metal feed-rates for each feed stream.

C. Documentation that the level of spiking recommended during the demonstration test will mask sampling and analysis imprecision and inaccuracy to the extent that extrapolation of feed-rates and emission rates from the Demonstration Test data will be as accurate and precise as if full spiking were used.

**III.10.J.5.f.xiv** Documentation of the expected levels of constituents in HLW Vitrification System input streams, including, but not limited to, waste feed, glass former and reactants, control air, process air, steam, sparge bubbler air, air in-leakage from melter cave, gases from HLW Vitrification Vessel Ventilation System, and process water.

**III.10.J.5.f.xv** Documentation justifying the duration of the conditioning required to ensure the HLW Vitrification System had achieved steady-state operations under Demonstration Test operating conditions.

**III.10.J.5.f.xvi** Documentation of HLW Vitrification System process and leak detection system instruments and monitors as listed on Permit Tables III.10.J.C, III.10.J.F, III.10.K.C, and III.10.K.F to include:

A. Procurement specifications.

B. Location used.

C. Range, precision, and accuracy.

D. Calibration/functionality test procedures (either method number ASTM) or provide a copy of manufacturer's recommended calibration procedures.

E. Calibration/functionality test, inspection, and routine maintenance schedules and checklists, including justification for calibration, inspection and maintenance frequencies, criteria for identifying instruments found to be significantly out of calibration, and corrective action to be taken for instruments found to be significantly out of calibration (e.g., increasing frequency of calibration, instrument replacement, etc.).

F. Equipment instrument control logic narrative description (e.g., descriptions of failsafe conditions, etc.) [WAC 173-303-680(2), WAC 173-303-806(4)(i)(i)(B), and WAC 173-303-806(4)(i)(v)]

**III.10.J.5.f.xvii** Outline of demonstration test report.

**Table III.10.J.A – HLW Plant Miscellaneous Unit System Description**

| Sub-system Description | Sub-system Designation | Engineering Description (Drawing Nos., Specification Nos., etc.) | Narrative Description, Tables, and Figures |
|---|---|---|---|
| **HLW Melter Process System**<br><br>HMP-MLTR-00001 (HLW Melter 1)<br><br>HMP-MLTR-00002 (HLW Melter 2) | HMP | -M6-HMP-00001001, Rev 0<br>-M6-HMP-00001002, Rev 1<br>-M6-HMP-00003001, Rev 0<br>-M6-HMP-00004001, Rev 1<br>-M6-HMP-00006001, Rev 1<br>-M6-HMP-00006002, Rev 0<br>-M6-HMP-00007001, Rev 0<br>-M6-HMP-00008001, Rev 0<br>-M6-HMP-00013002, Rev 1<br>-M6-HMP-00013003, Rev 0<br>-M6-HMP-20001001, Rev 0<br>-M6-HMP-20001002, Rev 0<br>-M6-HMP-20003001, Rev 0<br>-M6-HMP-20004001, Rev 0<br>-M6-HMP-20006001, Rev 0<br>-M6-HMP-20008001, Rev 0<br>-M6-HMP-20013002, Rev 0<br>-M6-HMP-20013003, Rev 0<br>-M5-V17T-P0002, Rev 1<br>-M5-V17T-P20002, Rev 1<br>-M0D-HMP-00001, Rev 2<br>-M0D-HMP-00002, Rev 2<br>-MF-HMP-00001, Rev 0<br>-MF-HMP-00002, Rev 0<br>-MF-HMP-00003, Rev 0<br>-N1D-HMP-P0001, Rev 0<br>-P1-P01T-00002, Rev 7<br>-3PS-AE00-T0001, Rev 5 | Section 4F.2.2; Table 4F-2; and Figures 4A-1, 4A-4 and 4A-27 in Operating Unit Group 10, Chapter 4of this Permit. |
| **Melter Offgas Treatment Process System**<br><br>HOP-FCLR-00001 (Melter 1 Offgas Film Cooler)<br><br>HOP-FCLR-00002 (Melter 2 Offgas Film Cooler) | HOP | **24590-HLW**<br>-M5-V17T-P0002, Rev1<br>-M5-V17T-P20002, Rev 1<br>-M6-HMP-00002001, Rev 0<br>-M6-HMP-00002002, Rev 0<br>-M6-HMP-20002001, Rev 0<br>-M6-HMP-20002001, Rev 0 | Section 4F.4.2; Table 4F-2; and Figures 4A-1, 4A-4 and 4A-27 -in Operating Unit Group 10, Chapter 4 of this Permit. |

**Table III.10.J.A – HLW Plant Miscellaneous Unit System Description**

| Sub-system Description | Sub-system Designation | Engineering Description (Drawing Nos., Specification Nos., etc.) | Narrative Description, Tables, and Figures |
|---|---|---|---|
| HOP-FCLR-00003 (Melter 1 Standby Offgas Insert)<br><br>HOP-FCLR-00004 (Melter 2 Standby Offgas Insert) | | -3YD-HOP-00001[a] | |
| **Melter Offgas Treatment Process System (Cont.)**<br><br>HOP-SCB-00001 (Melter 1 Submerged Bed Scrubber, SBS)<br><br>HOP-SCB-00002 (Melter 2 Submerged Bed Scrubber, SBS) | HOP | **24590-HLW**<br>-M5-V17T-P0003, Rev 1<br>-M5-V17T-P20003, Rev 1<br>-M6-HOP-00001001, Rev 0<br>-M6-HOP-00001002, Rev 0<br>-M6-HOP-00001003, Rev 0<br>-M6-HOP-20001001, Rev 0<br>-M6-HOP-20001002, Rev 0<br>-M6-HOP-20001003, Rev 0<br>-MKD-HOP-00016, Rev 13<br>-MK-HOP-P0001001, Rev 0<br>-MK-HOP-P0001002, Rev 0<br>-MK-HOP-P0001003, Rev 0<br>-MK-HOP-P0001004, Rev 0<br>-N1D-HOP-P0010, Rev 0<br>-P1-P01T-00002, Rev 7<br>-3YD-HOP-00001[a]<br>**24590-WTP**<br>-3PS-MV00-T0001, Rev 5<br>-3PS-MV00-T0002, Rev 3<br>-3PS-MV00-T0003, Rev 3 | Section 4F.4.2; Table 4F-2; and Figures 4A-1 and 4A-4 in Operating Unit Group 10, Chapter 4 of this Permit. |
| **Melter Offgas Treatment Process System (Cont.)**<br><br>HOP-WESP-00001 (Melter 1 Wet Electrostatic Precipitator, WESP)<br><br>HOP-WESP-00002 (Melter 2 Wet Electrostatic Precipitator, WESP) | HOP | **24590-HLW**<br>-M5-V17T-P0003, Rev 1<br>-M5-V17T-P20003, Rev 1<br>-M6-HOP-00002, Rev 5<br>-M6-HOP-20002, Rev 6<br>-N1D-HOP-P0002, Rev 0<br>-P1-P01T-00004, Rev 7<br>-P1-P01T-00005, Rev 6<br>-3YD-HOP-00001[a] | Section 4F.4.2; Table 4F-2; and Figures 4A-1 and 4A-4 in Operating Unit Group 10, Chapter 4 of this Permit. |

**Table III.10.J.A – HLW Plant Miscellaneous Unit System Description**

| Sub-system Description | Sub-system Designation | Engineering Description (Drawing Nos., Specification Nos., etc.) | Narrative Description, Tables, and Figures |
|---|---|---|---|
| | | **24590-WTP**<br>-3PS-MKE0-T0001, Rev 5 | |
| **Melter Offgas Treatment Process System (Cont.)**<br><br>HOP-HEPA-00001A (Melter 1 Primary Offgas HEPA Filter)<br><br>HOP-HEPA-00001B (Melter 1 Primary Offgas HEPA Filter)<br><br>HOP-HEPA-00002A (Melter 1 Secondary Offgas HEPA Filter)<br><br>HOP-HEPA-00002B (Melter 1 Secondary Offgas HEPA Filter)<br><br>HOP-HEPA-00007A (Melter 2 Primary Offgas HEPA Filter)<br><br>HOP-HEPA-00007B (Melter 2 Primary Offgas HEPA Filter)<br><br>HOP-HEPA-00008A (Melter 2 Secondary Offgas HEPA Filter)<br><br>HOP-HEPA-00008B (Melter 2 Secondary Offgas HEPA Filter) | HOP | **24590-HLW**<br>-M5-V17T-P0003, Rev 1<br>-M5-V17T-P20003, Rev 1<br>-M6-HOP-00010, Rev 3<br>-M6-HOP-20010, Rev 4<br>-MAD-HOP-00010, Rev 5<br>-MAD-HOP-00011, Rev 5<br>-MAD-HOP-00012, Rev 5<br>-MAD-HOP-00013, Rev 5<br>-MAD-HOP-00014, Rev 5<br>-MAD-HOP-00015, Rev 5<br>-MAD-HOP-00016, Rev 5<br>-MAD-HOP-00017, Rev 5<br>-P1-P01T-00002, Rev 7<br>-3YD-HOP-00001[a]<br><br>**24590-WTP**<br>-3PS-MKH0-T0002, Rev 4 | Section 4F.4.2; Table 4F-2; and Figures 4A-1 and 4A-4 in Operating Unit Group 10, Chapter 4 of this Permit. |
| **Melter Offgas Treatment Process System (Cont.)**<br><br>HOP-ADBR-00001A (Melter 1 Activated Carbon Adsorber – located on Activated Carbon Adsorber Skid HOP-ADBR-00001)<br><br>HOP-ADBR-00001B (Melter 1 Activated Carbon Adsorber – located | HOP | **24590-HLW**<br>-M5-V17T-00004, Rev 5<br>-M5-V17T-20004, Rev 1<br>-M6-HOP-00003001, Rev 0<br>-M6-HOP-00003002, Rev 0<br>-M6-HOP-20003001, Rev 0<br>-M6-HOP-20003002, Rev 0<br>-MVD-HOP-00015, Rev 3<br>-MVD-HOP-00016, Rev 3 | Section 4F.4.2; Table 4F-2; and Figures 4A-1 and 4A-4 in Operating Unit Group 10, Chapter 4 of this Permit. |

**Table III.10.J.A – HLW Plant Miscellaneous Unit System Description**

| Sub-system Description | Sub-system Designation | Engineering Description (Drawing Nos., Specification Nos., etc.) | Narrative Description, Tables, and Figures |
|---|---|---|---|
| on Activated Carbon Adsorber Skid HOP-ADBR-00001)<br><br>HOP-ADBR-00002A (Melter 2 Activated Carbon Adsorber – located on Activated Carbon Adsorber Skid HOP-ADBR-00002)<br><br>HOP-ADBR-00002B (Melter 2 Activated Carbon Adsorber – located on Activated Carbon Adsorber Skid HOP-ADBR-00002) | | -N1D-HOP-00003, Rev 1<br>-P1-P01T-00002, Rev 7<br><br>**<u>24590-WTP</u>**<br>-3PS-MWK0-T0001, Rev 5 | |
| **<u>Melter Offgas Treatment Process System (Cont.)</u>**<br><br>HOP-HEME-00001A (Melter 1 High Efficiency Mist Eliminator, HEME)<br><br>HOP-HEME-00001B (Melter 1 High Efficiency Mist Eliminator, HEME)<br><br>HOP-HEME-00002A (Melter 2 High Efficiency Mist Eliminator, HEME)<br><br>HOP-HEME-00002B (Melter 2 High Efficiency Mist Eliminator, HEME) | HOP | **<u>24590-HLW</u>**<br>-M5-V17T-P0003, Rev 1<br>-M5-V17T-P20003, Rev 1<br>-M6-HOP-00009001, Rev 0<br>-M6-HOP-00009002, Rev 0<br>-M6-HOP-20009001, Rev 0<br>-M6-HOP-20009002, Rev 0<br>-MVD-HOP-00007, Rev 5<br>-MV-HOP-P0002001, Rev 0<br>-MV-HOP-P0002002, Rev 0<br>-MV-HOP-P0002003, Rev 0<br>-N1D-HOP-P0001, Rev 0<br>-P1-P01T-00002, Rev 7<br>-3YD-HOP-00001[a] | Section 4F.4.2; Table 4F-2; and Figures 4A-1 and 4A-4 in Operating Unit Group 10, Chapter 4 of this Permit. |
| **<u>Melter Offgas Treatment Process System (Cont.)</u>**<br><br>HOP-SCO-00001 (Thermal Catalytic Oxidizer – located on Catalyst SkidHOP-SKID-00005)<br><br>HOP-SCO-00004 (Thermal Catalytic Oxidizer – located on Catalyst Skid HOP-SKID-00007) | HOP | **<u>24590-HLW</u>**<br>-M5-V17T-00004, Rev 5<br>-M5-V17T-20004, Rev 1<br>-M6-HOP-00008001,Rev 0<br>-M6-HOP-00008002,Rev 0<br>-M6-HOP-00008003,Rev 0<br>-M6-HOP-20008001, Rev 0<br>-M6-HOP-20008002, Rev 0<br>-M6-HOP-20008003, Rev 0<br>-MKD-HOP-00019, Rev 10<br>-N1D-HOP-00004, Rev 5 | Section 4F.4.2; Table 4F-2; and Figures 4A-1 and 4A-4 in Operating Unit Group 10, Chapter 4 of this Permit. |

**Table III.10.J.A – HLW Plant Miscellaneous Unit System Description**

| Sub-system Description | Sub-system Designation | Engineering Description (Drawing Nos., Specification Nos., etc.) | Narrative Description, Tables, and Figures |
|---|---|---|---|
| | | -NID-HOP-00005, Rev 5<br>-P1-P01T-00002, Rev 7<br>-3PS-MBTV-T0002, Rev 1<br>**24590-LAW**<br>-3PS-MBTV-T0001, Rev 5 | |
| **Melter Offgas Treatment Process System (Cont.)**<br><br>HOP-SCR-00001 (NOx Selective Catalytic Reducer – located on Catalyst Skid HOP-SKID-00005)<br><br>HOP-SCR-00002 (NOx Selective Catalytic Reducer – located on Catalyst Skid HOP-SKID-00007) | HOP | **24590-HLW**<br>-M5-V17T-00004, Rev 5<br>-M5-V17T-20004, Rev 1<br>-M6-HOP-00008001, Rev 0<br>-M6-HOP-00008002, Rev 0<br>-M6-HOP-00008003, Rev 0<br>-M6-HOP-20008001, Rev 0<br>-M6-HOP-20008002, Rev 0<br>-M6-HOP-20008003, Rev 0<br>-MKD-HOP-00019, Rev 10<br>-N1D-HOP-00004, Rev 5<br>-N1D-HOP-00005, Rev 5<br>-P1-P01T-00002, Rev 7<br>-3PS-MBTV-T0002, Rev 1<br>**24590-LAW**<br>-3PS-MBTV-T0001, Rev 5 | Section 4F.4.2; Table 4F-2; and Figures 4A-1 and 4A-4 in Operating Unit Group 10, Chapter 4 of this Permit. |
| **Melter Offgas Treatment Process System (Cont.)**<br><br>HOP-HX-00001 (Catalyst Skid Preheater – located on Catalyst Skid HOP-SKID-00005)<br><br>HOP-HX-00003 (Catalyst Skid Preheater – located on Catalyst Skid HOP-SKID-00007) | HOP | **24590-HLW**<br>-M5-V17T-00004, Rev 5<br>-M5-V17T-20004, Rev 1<br>-M6-HOP-00008001, Rev 0<br>-M6-HOP-00008002, Rev 0<br>-M6-HOP-00008003, Rev 0<br>-M6-HOP-20008001, Rev 0<br>-M6-HOP-20008002, Rev 0<br>-M6-HOP-20008003, Rev 0<br>-MKD-HOP-00019, Rev 10<br>-N1D-HOP-00008, Rev 2<br>-P1-P01T-P0002, Rev 7<br>-3PS-MBTV-T0002, Rev 1<br>**24590-LAW**<br>-3PS-MBTV-T0001, Rev 5 | Section 4F.4.2; Table 4F-2; and Figures 4A-1 and 4A-4 in Operating Unit Group 10, Chapter 4 of this Permit. |

**Table III.10.J.A – HLW Plant Miscellaneous Unit System Description**

| Sub-system Description | Sub-system Designation | Engineering Description (Drawing Nos., Specification Nos., etc.) | Narrative Description, Tables, and Figures |
|---|---|---|---|
| **Melter Offgas Treatment Process System (Cont.)**<br><br>HOP-HTR-00001 (Catalyst Skid Electric Heater – located on Catalyst Skid HOP-SKID-00005)<br><br>HOP-HTR-00007 (Catalyst Skid Electric Heaters – located on Catalyst Skid HOP-SKID-00007) | HOP | **24590-HLW**<br>-M5-V17T-00004, Rev 5<br>-M5-V17T-20004, Rev 1<br>-M6-HOP-00008001, Rev 0<br>-M6-HOP-00008002, Rev 0<br>-M6-HOP-00008003, Rev 0<br>-M6-HOP-20008001, Rev 0<br>-M6-HOP-20008002, Rev 0<br>-M6-HOP-20008003, Rev 0<br>-MKD-HOP-00019, Rev 10<br>-P1-P01T-00002, Rev 7<br>-3PS-MBTV-T0002, Rev 1<br>-N1D-HOP-00011, Rev 0<br>**24590-LAW**<br>-3PS-MBTV-T0001, Rev 5 | Section 4F.4.2; Table 4F-2; and Figures 4A-1 and 4A-4 in Operating Unit Group 10, Chapter 4of this Permit. |
| **Melter Offgas Treatment Process System (Cont.)**<br><br>HOP-ABS-00002 (Silver Mordenite Column)<br><br>HOP-ABS-00003 (Silver Mordenite Column) | HOP | **24590-HLW**<br>-M5-V17T-00004, Rev 5<br>-M5-V17T-20004, Rev 1<br>-M6-HOP-00008001, Rev 0<br>-M6-HOP-00008002, Rev 0<br>-M6-HOP-00008003, Rev 0<br>-M6-HOP-20008001, Rev 0<br>-M6-HOP-20008002, Rev 0<br>-M6-HOP-20008003, Rev 0<br>-MKD-HOP-00014, Rev 5<br>-MKD-HOP-00017, Rev 6<br>-NID-HOP-P0006, Rev 1<br>-P1-P01T-00001, Rev 9<br>-3PS-MBT0-TP001, Rev 2 | Section 4F.4.2; Table 4F-2; and Figures 4A-1 and 4A-4 in Operating Unit Group 10, Chapter 4 of this Permit. |

**Table III.10.J.A – HLW Plant Miscellaneous Unit System Description**

| Sub-system Description | Sub-system Designation | Engineering Description (Drawing Nos., Specification Nos., etc.) | Narrative Description, Tables, and Figures |
|---|---|---|---|
| **Melter Offgas Treatment Process System (Cont.)**<br><br>HOP-HTR-00001B (HEPA Preheater)<br><br>HOP-HTR-00002A (HEPA Preheater)<br><br>HOP-HTR-00005A (HEPA Preheater)<br><br>HOP-HTR-00005B (HEPA Preheater) | HOP | **24590-HLW**<br>-M5-V17T-P0003, Rev 1<br>-M5-V17T-P20003, Rev 1<br>-M6-HOP-00010, Rev 3<br>-M6-HOP-20010, Rev 4<br>-MED-HOP-00013, Rev 4<br>-3PS-MEE0-T0001, Rev 1 | Section 4F.4.2; Table 4F-2; and Figures 4A-1 and 4A-4 in Operating Unit Group 10, Chapter 4 of this Permit. |
| **Melter Offgas Treatment Process System (Cont.)**<br><br>HOP-HX-00002 (Silver Mordenite Preheater)<br><br>HOP-HX-00004 (Silver Mordenite Preheater) | HOP | **24590-HLW**<br>-M5-V17T-00004, Rev 5<br>-M5-V17T-20004, Rev 1<br>-M6-HOP-00003001, Rev 0<br>-M6-HOP-00003002, Rev 0<br>-M6-HOP-20003001, Rev 0<br>-M6-HOP-20003002, Rev 0<br>-N1D-HOP-00007, Rev 1<br>-P1-P01T-00002, Rev 7 | Section 4F.4.2; Table 4F-2; and Figures 4A-1 and 4A-4 in Operating Unit Group 10, Chapter 4of this Permit. |
| **Melter Offgas Treatment Process System (Cont.)**<br><br>HOP-FAN-00001A (Booster Extraction Fan)<br><br>HOP-FAN-00001B (Booster Extraction Fan)<br><br>HOP-FAN-00001C (Booster Extraction Fan)<br><br>HOP-FAN-00009A (Booster Extraction Fan) | HOP | **24590-HLW**<br>-M5-V17T-00004, Rev 5<br>-M5-V17T-20004, Rev 1<br>-M6-HOP-00003001, Rev 0<br>-M6-HOP-00003002, Rev 0<br>-M6-HOP-20003001, Rev 0<br>-M6-HOP-20003002, Rev 0<br>-MAD-HOP-00018, Rev 9<br>-P1-P01T-00001, Rev 9<br><br>**24590-WTP**<br>-3PS-MACS-T0004, Rev 6 | Section 4F.4.2; Table 4F-2; and Figures 4A-1 and 4A-4 in Operating Unit Group 10, Chapter 4 of this Permit. |

**Table III.10.J.A – HLW Plant Miscellaneous Unit System Description**

| Sub-system Description | Sub-system Designation | Engineering Description (Drawing Nos., Specification Nos., etc.) | Narrative Description, Tables, and Figures |
|---|---|---|---|
| HOP-FAN-00009B (Booster Extraction Fan)<br>HOP-FAN-00009C (Booster Extraction Fan) | | | |
| **Melter Offgas Treatment Process System (Cont.)**<br><br>HOP-FAN-00008A (Stack Extraction Fan)<br><br>HOP-FAN-00008B (Stack Extraction Fan)<br><br>HOP-FAN-00008C (Stack Extraction Fan)<br><br>HOP-FAN-000010A (Stack Extraction Fan)<br><br>HOP-FAN-000010B (Stack Extraction Fan)<br><br>HOP-FAN-000010C (Stack Extraction Fan) | HOP | **24590-HLW**<br>-M5-V17T-00004, Rev 5<br>-M5-V17T-20004, Rev 1<br>-M6-HOP-00008001, Rev 0<br>-M6-HOP-00008002, Rev 0<br>-M6-HOP-00008003, Rev 0<br>-M6-HOP-20008001, Rev 0<br>-M6-HOP-20008002, Rev 0<br>-M6-HOP-20008003, Rev 0<br>-MAD-HOP-00038, Rev 5<br>-P1-P01T-00005, Rev 6<br><br>**24590-WTP**<br>-3PS-MACS-T0004, Rev 6 | Section 4F.4.2; Table 4F-2; and Figures 4A-1 and 4A-4 in Operating Unit Group 10, Chapter 4 of this Permit. |
| **Melter Offgas Treatment Process System (Cont.)**<br><br>HLW Stack | HOP | **24590-HLW**<br>-M5-V17T-00004, Rev 5<br>-M5-V17T-20004, Rev 1<br>-M6-HOP-00008001, Rev 0<br>-M6-HOP-00008002, Rev 0<br>-M6-HOP-00008003, Rev 0<br>-M6-HOP-20008001, Rev 0<br>-M6-HOP-20008002, Rev 0<br>-M6-HOP-20008003, Rev 0 | Section 4F.4.2; and Figures 4A-1 and 4A-4 in Operating Unit Group 10, Chapter 4 of this Permit. |
| **Pulse Jet Ventilation System**<br><br>PJV-HTR-00002 (Pulse Jet Ventilation HEPA Electric Preheater) | PJV | **24590-HLW**<br>-M6-PJV-00001001, Rev 0<br>-M6-PJV-00002001, Rev 0 | |

**Table III.10.J.A – HLW Plant Miscellaneous Unit System Description**

| Sub-system Description | Sub-system Designation | Engineering Description (Drawing Nos., Specification Nos., etc.) | Narrative Description, Tables, and Figures |
|---|---|---|---|
| PJV-HEPA-00004B (PJV System HEPA Filter (Standby Primary))<br><br>PJV-HEPA-00005B (PJV System HEPA Filter (Standby Secondary))<br><br>PJV-HEPA-00004A (PJV System HEPA Filter (Primary))<br><br>PJV-HEPA-00005A (PJV System HEPA Filter (Secondary))<br><br>PJV-FAN-00002A (Pulse Jet Vent Extraction Fan)<br><br>PJV-FAN-00002B (Pulse Jet Vent Extraction Fan) | | | |
| **Process Vessel Vent Extraction System**<br><br>PVV system contains ancillary equipment only. | PVV | **24590-HLW**<br>-M6-PVV-00001, Rev 4<br>-M6-PVV-20001, Rev 2 | |
| [a]System Descriptions are maintained in the Administrative Record, and are listed here for information only. | | | |

This page intentionally left blank.

**Table III.10.J.B – HLW Vitrification Systems Secondary Containment Systems Including Sumps and Floor Drains**

| Sump/Floor Drain I.D.# & Room Location | Maximum Sump Capacity (gallons) | Sump Dimensions[a] (feet) & Materials of Construction | Maximum Allowable Liquid Height (inches) | Secondary Containment Volume (gallons) | Engineering Description (Drawing Nos., Specification Nos., etc.) |
|---|---|---|---|---|---|
| RESERVED | RESERVED | RESERVED | RESERVED | RESERVED | RESERVED |
| [a]Dimensions listed are based on permitted design. Actual dimensions may vary within plus or minus (TBD). | | | | | |

1

**Table III.10.J.C – HLW Vitrification System Process and Leak Detection System Instruments and Parameters**

| P&ID | Monitoring or Control Parameter | Type of Instrument or Control Device | Instrument or Control Device Tag No. | Instrument Range | Expected Range | Fail States | Instrument Accuracy | Instrument Calibration Method No. and Range |
|---|---|---|---|---|---|---|---|---|
| 24590-HLW-M6-HMP-00004001, Rev 1 | Melter 1 plenum temperature, 62” | TBD | (TE-0920A + TT-0920A + TI-0920A)* Or (TE-0920C + TT-0921A + TI-0921F)* | TBD | TBD | TBD | TBD | TBD |
| 24590-HLW-M6-HMP-00004001, Rev 1 | Melter 1 plenum temperature, 59” | TBD | (TE-0920B + TT-920A + TI-0920B)* Or (TE-920D + TT-0921A+ TI-0921E)* | TBD | TBD | TBD | TBD | TBD |

**Table III.10.J.C – HLW Vitrification System Process and Leak Detection System Instruments and Parameters**

| P&ID | Monitoring or Control Parameter | Type of Instrument or Control Device | Instrument or Control Device Tag No. | Instrument Range | Expected Range | Fail States | Instrument Accuracy | Instrument Calibration Method No. and Range |
|---|---|---|---|---|---|---|---|---|
| 24590-HLW-M6-HMP-20004001, Rev 0 | Melter 2 plenum temperature, 62” | TBD | (TE-2920A + TT-2920A + TI-2920A)* Or (TE-2920C + TT-2921A + TI-2920C)* | TBD | TBD | TBD | TBD | TBD |
| 24590-HLW-M6-HMP-20004001, Rev 0 | Melter 2 plenum temperature, 59” | TBD | (TE-2920B + TT-2920A + TI-2920B)* Or (TE-2920D + TT-2921A + TI-2920D)* | TBD | TBD | TBD | TBD | TBD |
| 24590-HLW-M6-HMP-00013002, Rev 1 24590-HLW-M6-HMP-00013003, Rev 0 | Melter 1 glass pool density | TBD | DT-0132 DI-0132 | TBD | TBD | TBD | TBD | TBD |
| 24590-HLW-M6-HMP-00013002, Rev 1 24590-HLW-M6-HMP-00013003, Rev 0 | Melter 1 glass pool level | TBD | LT-0131 LI-0131 | TBD | TBD | TBD | TBD | TBD |

**Table III.10.J.C – HLW Vitrification System Process and Leak Detection System Instruments and Parameters**

| P&ID | Monitoring or Control Parameter | Type of Instrument or Control Device | Instrument or Control Device Tag No. | Instrument Range | Expected Range | Fail States | Instrument Accuracy | Instrument Calibration Method No. and Range |
|---|---|---|---|---|---|---|---|---|
| 24590-HLW-M6-HMP-20013002, Rev 0<br>24590-HLW-M6-HMP-20013003, Rev 0 | Melter 2 glass pool density | TBD | DT-2132<br>DI-2132 | TBD | TBD | TBD | TBD | TBD |
| 24590-HLW-M6-HMP-20013002, Rev 0<br>24590-HLW-M6-HMP-20013003, Rev 0 | Melter 2 glass pool level | TBD | LT-2131<br>LI-2131 | TBD | TBD | TBD | TBD | TBD |
| 24590-HLW-M6-HMP-00013002, Rev 1<br>24590-HLW-M6-HMP-00013003, Rev 0 | Melter 1 plenum pressure | TBD | (PDT-0139A + PDI-0139A)*<br>Or<br>(PDT-0139B + PDI-0139B)* | TBD | TBD | TBD | TBD | TBD |
| 24590-HLW-M6-HMP-20013002, Rev 0<br>24590-HLW-M6-HMP-20013003, Rev 0 | Melter 2 plenum pressure | TBD | (PDT-2139A + PDI-2139A)*<br>Or<br>(PDT-2139B + PDI-2139B)* | TBD | TBD | TBD | TBD | TBD |

**Table III.10.J.C – HLW Vitrification System Process and Leak Detection System Instruments and Parameters**

| P&ID | Monitoring or Control Parameter | Type of Instrument or Control Device | Instrument or Control Device Tag No. | Instrument Range | Expected Range | Fail States | Instrument Accuracy | Instrument Calibration Method No. and Range |
|---|---|---|---|---|---|---|---|---|
| 24590-HLW-M6-HMP-00008001, Rev 0<br>24590-HLW-M6-HMP-00008002, Rev 0 | Melter 1 West canister level | TBD | LT-0816<br>(LI-0816A Or LI-0816B)** | TBD | TBD | TBD | TBD | TBD |
| 24590-HLW-M6-HMP-00007001, Rev 0 | Melter 1 West Discharge Air Lift | TBD | YC-0761<br>YV-0761 | TBD | TBD | TBD | TBD | TBD |
| 24590-HLW-M6-HMP-00008001, Rev 0<br>24590-HLW-M6-HMP-00008002, Rev 0 | Melter 1 East canister level | TBD | LT-0820<br>(LI-0820A Or LI-0820B)** | TBD | TBD | TBD | TBD | TBD |
| 24590-HLW-M6-HMP-00006001, Rev 1<br>24590-HLW-M6-HMP-00006002, Rev 0 | Melter 1 East Discharge Air Lift | TBD | YC-0664<br>YV-0664 | TBD | TBD | TBD | TBD | TBD |
| 24590-HLW-M6-HMP-20008001, Rev 0<br>24590-HLW-M6-HMP-20008002, Rev 0 | Melter 2 West canister level | TBD | LT-2816<br>(LI-2816A Or LI-2816B)** | TBD | TBD | TBD | TBD | TBD |

**Table III.10.J.C – HLW Vitrification System Process and Leak Detection System Instruments and Parameters**

| P&ID | Monitoring or Control Parameter | Type of Instrument or Control Device | Instrument or Control Device Tag No. | Instrument Range | Expected Range | Fail States | Instrument Accuracy | Instrument Calibration Method No. and Range |
|---|---|---|---|---|---|---|---|---|
| 24590-HLW-M6-HMP-20007001, Rev 0 | Melter 2 West Discharge Air Lift | TBD | YC-2761<br><br>YV-2761 | TBD | TBD | TBD | TBD | TBD |
| 24590-HLW-M6-HMP-20008001, Rev 0<br>24590-HLW-M6-HMP-20008002, Rev 0 | Melter 2 East canister level | TBD | LT-2820<br><br>(LI-2820A Or LI-2820B)** | TBD | TBD | TBD | TBD | TBD |
| 24590-HLW-M6-HMP-20006001, Rev 0 | Melter 2 East Discharge Air Lift | TBD | YC-2664<br><br>YV-2664 | TBD | TBD | TBD | TBD | TBD |
| RESERVED | RESERVED | RESERVED | RESERVED | RESERVED | RESERVED | RESERVED | RESERVED | RESERVED |

*These instrument sets are duplicates. Only one instrument set is required to remain functioning during waste feed operations.

**These instruments are duplicates. Only one instrument is required to remain functioning during waste feed operations.

This page intentionally left blank.

**Table III.10.J.D – Maximum Feed-Rates to HLW Vitrification System (RESERVED)**

| Description of Waste | Shakedown 1 | Shakedown 2, Demonstration Test and Post Demonstration Test |
|---|---|---|
| Dangerous and Mixed Waste Feed Rate | RESERVED | RESERVED |
| Ash Feed Rate | RESERVED | RESERVED |
| Total Chlorine/Chloride Feed Rate | RESERVED | RESERVED |
| Total Metal Feedrates | RESERVED | RESERVED |

1

**Table III.10.J.E – HLW Vitrification System Estimated Emission Rates (RESERVED)**

| Chemicals | CAS Number | Emission Rates (grams/second) |
|---|---|---|
| RESERVED | RESERVED | RESERVED |

2

**Table III.10.J.F. - HLW Vitrification System Waste Feed Cut-off Parameters* (RESERVED)**

| Subsystem Designation | Instrument Tag Number | Parameter Description | Setpoints During Shakedown 1 and Post Demonstration Test | Setpoints During Shakedown 2 and Demonstration Test |
|---|---|---|---|---|
| RESERVED | RESERVED | RESERVED | RESERVED | RESERVED |

*A continuous monitoring system will be used as defined in Permit Section III.10.C.1.

[1]Maximum Feed-rate will be set based on not exceeding any of the constituent (e.g., metals, ash, and chlorine/chloride) feed limits specified on Table III.10.J.D. of this Permit

3

## III.10.K HLW VITRIFICATION SYSTEM – LONG TERM MISCELLANEOUS THERMAL TREATMENT UNIT

For purposes of Permit Section III.10.K, where reference is made to WAC 173-303-640, the following substitutions apply: substitute the terms "HLW Vitrification System" for "tank system(s)," "sub-system(s)" for "tank(s)," "sub-system equipment" for "ancillary equipment," and "sub-system(s) or sub-system equipment of a HLW Vitrification System" for "component(s)," in accordance with WAC 173-303-680.

### III.10.K.1 Requirements For HLW Vitrification System Beginning Normal Operation

Prior to commencing normal operations provided in Permit Section III.10.K, all requirements in Permit Section III.10.J will have been met by the Permittees and approved by Ecology, including the following: The HLW Vitrification System Demonstration Test results and the revised Final Risk Assessment provided for in Permit Conditions III.10.C.11.c. or d. and Permit Section III.10.J, will have been evaluated and approved by Ecology, Permit Tables III.10.K.D and F, as approved/modified pursuant to Permit Condition III.10.J.5, will have been completed, submitted and approved pursuant to Permit Condition III.10.J.3.d.v. and Permit Table III.10.K.E, as approved/modified pursuant to Permit Condition III.10.J.5, will have been completed, submitted and approved pursuant to Permit Conditions III.10.C.11.c. or d.

**III.10.K.1.a** Construction and Maintenance [WAC 173-303-640, in accordance with WAC 173-303-680(2) and (3), and WAC 173-303-340]

**III.10.K.1.a.i** The Permittees will maintain the design and construction of the HLW Vitrification System as specified in Permit Condition III.10.K.1, Operating Unit Group 10, Chapter 4 of this Permit, and Operating Unit Group 10, Appendices 10.1 through 10.17 of this Permit, as approved pursuant to Permit Conditions III.10.J.5.a. through d. and III.10.J.5.f.

**III.10.K.1.a.ii** The Permittees will maintain the design and construction of all containment systems for the HLW Vitrification System as specified in Operating Unit Group 10, Chapter 4 of this Permit, and Operating Unit Group 10, Appendices 10.2 and 10.4 through 10.14 of this Permit, as approved pursuant to Permit Conditions III.10.J.5.a. through d.

**III.10.K.1.a.iii** Modifications to approved design, plans, and specifications in Operating Unit Group 10, of this Permit, for the HLW Vitrification System will be allowed only in accordance with Permit Conditions III.10.C.2.e. and f., or III.10.C.2.g., III.10.C.9.d., e., and h.

**III.10.K.1.a.iv** The Permittees will ensure all certifications required by specialists (e.g., independent, qualified, registered professional engineer; registered, professional engineer; independent corrosion expert; independent, qualified installation inspector; installation inspector; etc.) use the following statement or equivalent pursuant to Permit Condition III.10.C.10:

"I, (Insert Name) have (choose one or more of the following: overseen, supervised, reviewed, and/or certified) a portion of the design or installation of a new HLW Vitrification system or component located at (address), and owned/operated by (name(s)). My duties were: (e.g., installation inspector, testing for tightness, etc.), for the following HLW Vitrification system components (e.g., the venting piping, etc.), as required by the Dangerous Waste Regulations, namely, WAC 173-303-640(3) (applicable paragraphs [i.e., (a) through (g)]), in accordance with WAC 173-303-680.

"I certify under penalty of law that I have personally examined and am familiar with the information submitted in this document and all attachments and that, based on my inquiry of those individuals immediately responsible for obtaining the information, I believe that the information is true, accurate, and complete. I am aware that there are significant penalties for submitting false information, including the possibility of fine and imprisonment."

**III.10.K.1.a.v** The Permittees will ensure periodic integrity assessments are conducted on the HLW Vitrification System listed in Permit Table III.10.I.A, as approved/modified pursuant to Permit Condition III.10.J.5, over the term of this Permit, in accordance with WAC 173-303-680(2) and (3), as specified in WAC 173-303-640(3)(b) following the description of the integrity assessment program and schedule in Operating Unit Group 10, Addendum E of this Permit, as approved pursuant to Permit Conditions III.10.J.5.e.i. and III.10.C.5.c. Results of the integrity assessments will be included in the WTP Unit operating record until ten (10) years after post-closure, or corrective action is complete and certified, whichever is later.

**III.10.K.1.a.vi** The Permittees will address problems detected during the HLW Vitrification System integrity assessments specified in Permit Condition III.10.K.1.a.v. following the description of the integrity assessment program in Operating Unit Group 10, Addendum E of this Permit, as approved pursuant to Permit Conditions III.10.J.5.e.i. and III.10.C.5.c.

**III.10.K.1.a.vii** All process monitors/instruments as specified in Permit Table III.10.K.F, as approved/modified pursuant to Permit Condition III.10.J.5 and III.10.J.3.d.v., will be equipped with operational alarms to warn of deviation, or imminent deviation from the limits specified in Permit Table III.10.K.F.

**III.10.K.1.a.viii** The Permittees will install and test all process and leak detection system monitors/instruments, as specified in Permit Tables III.10.K.C and III.10.K.F, as approved/modified pursuant to Permit Conditions III.10.J.5 and III.10.J.3.d.v., in accordance with Operating Unit Group 10, Appendices 10.1, 10.2, and 10.14 of this Permit, as approved pursuant to Permit Conditions III.10.J.5.d.x. and III.10.J.5.f.xvi.

**III.10.K.1.a.ix** No dangerous and/or mixed waste will be treated in the HLW Vitrification System unless the operating conditions, specified under Permit Condition III.10.K.1.c. are complied with.

**III.10.K.1.a.x** The Permittees will not place dangerous and/or mixed waste, treatment reagents, or other materials in the HLW Vitrification System if these substances could cause the sub-system, sub-system equipment, or the containment system to rupture, leak, corrode, or otherwise fail [WAC 173-303-640(5)(a), in accordance with WAC 173-303-680(2)]. This condition is not applicable to corrosion of HLW Vitrification System sub-system or sub-system equipment that are expected to be replaced as part of normal operations (e.g., melter).

**III.10.K.1.a.xi** The Permittees will operate the HLW Vitrification System to prevent spills and overflows using the description of controls and practices as required under WAC 173-303-640(5)(b), described in Permit Condition III.10.C.5, and Operating Unit Group 10, Appendix 10.18 of this Permit, as approved pursuant to Permit Condition III.10.J.5.e. [WAC 173-303-640(5)(b), in accordance with WAC 173-303-680(2) and (3), WAC-173-303-806(4)(c)(ix)].

**III.10.K.1.a.xii** For routinely non-accessible HLW Vitrification System sub-systems, as specified in Operating Unit Group 10, Chapter 4 of this Permit, as updated pursuant to Permit

Condition III.10.J.5.e.vi., the Permittees will mark all routinely non-accessible HLW Vitrification System sub-systems access points with labels or signs to identify the waste contained in each HLW Vitrification System sub-system. The label, or sign, must be legible at a distance of at least fifty (50) feet, and must bear a legend which identifies the waste in a manner which adequately warns employees, emergency response personnel, and the public of the major risk(s) associated with the waste being stored or treated in the HLW Vitrification System sub-systems. For the purposes of this permit condition, "routinely non-accessible" means personnel are unable to enter these areas while waste is being managed in them [WAC 173-303-640(5)(d), in accordance with WAC 173-303-680(2)].

**III.10.K.1.a.xiii** For all the HLW Vitrification System sub-systems not addressed in Permit Condition III.10.K.1.a.xii., the Permittees will mark all these HLW Vitrification System sub-systems holding dangerous and/or mixed waste with labels or signs to identify the waste contained in the HLW Vitrification System sub-systems. The labels, or signs, must be legible at a distance of at least fifty (50) feet, and must bear a legend which identifies the waste in a manner which adequately warns employees, emergency response personnel, and the public of the major risk(s) associated with the waste being stored or treated in the HLW Vitrification System sub-systems [WAC 173-303-640(5)(d), in accordance with WAC 173-303-680(2)].

**III.10.K.1.a.xiv** The Permittees will ensure that the secondary containment systems for the HLW Vitrification System sub-systems listed in Permit Tables III.10.K.A and III.10.K.B, as approved/modified pursuant to Permit Condition III.10.J.5, are free of cracks or gaps to prevent any migration of dangerous and/or mixed waste or accumulated liquid out of the system to the soil, groundwater, or surface water at any time during the use of the HLW Vitrification System sub-systems. Any indication that a crack or gap may exist in the containment systems will be investigated and repaired in accordance with Operating Unit Group 10, Appendix 10.18 of this Permit, as approved pursuant to Permit Condition III.10.J.5.e.v. [WAC 173-303–640(4)(b)(i), WAC 173-303-640(4)(e)(i)(C), and WAC 173-303-640(6), in accordance with WAC 173-303-680(2) and (3), WAC 173-303-806(4)(i)(i)(B), and WAC 173-303-320].

**III.10.K.1.a.xv** The Permittees must immediately and safely remove from service any HLW Vitrification System or secondary containment system which through an integrity assessment is found to be "unfit for use" as defined in WAC 173-303-040, following Permit Condition III.10.K.1.a.xvii.A through D, and F. The affected HLW Vitrification System or secondary containment system must be either repaired or closed in accordance with Permit Condition III.10.K.1.a.xvii.E. [WAC 173-303-640(7)(e) and (f) and WAC 173-303-640(8), in accordance with WAC 173-303-680(3)].

**III.10.K.1.a.xvi** An impermeable coating, as specified in Operating Unit Group 10, Appendices 10.4, 10.5, 10.7, 10.9, 10.11, and 10.12 of this Permit, as approved pursuant to Permit Condition III.10.J.5.b.v., will be maintained for all concrete containment systems and concrete portions of containment systems for the HLW Vitrification System sub-systems listed in Permit Tables III.10. K.A and III.10.K.B, as approved/modified pursuant to Permit Condition III.10.J.5 (concrete containment systems that do not have a liner, pursuant to WAC 173-303-640(4)(e)(i), in accordance with WAC 173-303-680(2), and have construction joints, will meet the requirements of WAC 173-303-640(4)(e)(ii)(C), in accordance with WAC 173-303-680(2).

The coating will prevent migration of any dangerous and/or mixed waste into the concrete. All coatings will meet the following performance standards:

A. The coating must seal the containment surface such that no cracks, seams, or other avenues through which liquid could migrate are present;

B. The coating must be of adequate thickness and strength to withstand the normal operation of equipment and personnel within the given area such that degradation or physical damage to the coating or lining can be identified and remedied before dangerous and/or mixed waste could migrate from the system; and

C. The coating must be compatible with the dangerous and/or mixed waste, treatment reagents, or other materials managed in the containment system [WAC 173-303-640(4)(e)(ii)(D), in accordance with WAC 173-303-680(2) and (3), and WAC 173-303-806(4)(i)(i)(A)].

**III.10.K.1.a.xvii** The Permittees will inspect all secondary containment systems for the HLW Vitrification System sub-systems listed in Permit Tables III.10.K.A and III.10.K.B, as approved/modified pursuant to Permit Condition III.10.J.5., in accordance with the Inspection Plan specified in Operating Unit Group 10, Chapter 6A of this Permit, as approved pursuant to Permit Conditions III.10.J.5.e.i. and III.10.C.5.c., and take the following actions if a leak or spill of dangerous and/or mixed waste is detected in these containment systems [WAC 173-303-640(5)(c), WAC 173-303-640(6) in accordance with WAC 173-303-680(2) and (3), WAC 173-303-320, and WAC 173-303-806(4)(i)(i)(B)]:

A. Immediately, and safely, stop the flow of dangerous and/or mixed waste into the HLW Vitrification System sub-systems or secondary containment system.

B. Determine the source of the dangerous and/or mixed waste.

C. Remove the dangerous and/or mixed waste from the containment area in accordance with WAC 173-303-680(2) and (3), as specified in WAC 173-303-640(7)(b). The dangerous and/or mixed waste removed from containment areas of the HLW Vitrification System will be, at a minimum, managed as mixed waste.

D. If the cause of the release was a spill that has not damaged the integrity of the HLW Vitrification System sub-system, the Permittees may return the HLW Vitrification System sub-system to service in accordance with WAC 173-303-680(2) and (3), as specified in WAC 173-303-640(7)(e)(ii). In such case, the Permittees will take action to ensure the incident that caused the dangerous and/or mixed waste to enter the containment system will not reoccur.

E. If the source of the dangerous and/or mixed waste is determined to be a leak in from the primary HLW Vitrification System into the secondary containment system, or the system is unfit for use as determined through an integrity assessment or other inspection, the Permittees will comply with the requirements of WAC 173-303-640(7) and take the following actions:

1. Close the HLW Vitrification System sub-system following procedures in WAC 173-303-640(7)(e)(i), in accordance with WAC 173-303-680, and Operating Unit Group 10, Addendum H of this Permit, as approved pursuant to Permit Condition III.10.C.8.

2. Repair and re-certify (in accordance with WAC 173-303-810(13)(a), as modified pursuant to Permit Condition III.10.K.1.a.iii.) the HLW Vitrification System, in accordance with Operating Unit Group 10, Appendix 10.18 of this Permit, as approved pursuant to Permit Condition III.10.J.5.e.v., before the

HLW Vitrification System is placed back into service [WAC 173-303-640(7)(e)(iii) and WAC 173-303-640(7)(f), in accordance with WAC 173-303-680].

F. The Permittees will document in the operating record actions/procedures taken to comply with A through E above, as specified in WAC 173-303-640(6)(d), in accordance with WAC 173-303-680(2) and (3).

G. In accordance with WAC 173-303-680(2) and (3), the Permittees will notify and report releases to the environment to Ecology as specified in WAC 173-303-640(7)(d).

**III.10.K.1.a.xviii** If liquids (e.g., dangerous and/or mixed waste, leaks and spills, precipitation, fire water, liquids from damaged or broken pipes) cannot be removed from the secondary containment system within twenty-four (24) hours; Ecology will be verbally notified within twenty-four (24) hours of discovery. The notification will provide the information in A, B, and C, listed below. The Permittees will provide Ecology with a written demonstration within seven (7) business days, identifying at a minimum [WAC 173-303-640(4)(c)(iv) and WAC 173-303-640(7)(b)(ii), in accordance with WAC 173-303-680(3) and WAC 173-303-806(4)(i)(i)(B)]:

A. Reasons for delayed removal.

B. Measures implemented to ensure continued protection of human health and the environment.

C. Current actions being taken to remove liquids from secondary containment.

**III.10.K.1.a.xix** All air pollution control devices and capture systems in the HLW Vitrification System will be maintained and operated at all times in a manner so as to minimize the emissions of air contaminants and to minimize process upsets. Procedures for ensuring that the air pollution control devices and capture systems in the HLW Vitrification System are properly operated and maintained so as to minimize the emission of air contaminants and process upsets will be established.

**III.10.K.1.a.xx** In all future narrative permit submittals, the Permittees will include HLW Vitrification sub-system names with the sub-system designation.

**III.10.K.1.a.xxi** For any portion of the HLW Vitrification System which has the potential for formation and accumulation of hydrogen gases, the Permittees will operate the portion to maintain hydrogen levels below the lower explosive limit [WAC 173-303-815(2)(b)(ii)].

**III.10.K.1.a.xxii** For each HLW Vitrification System sub-system holding dangerous waste which are acutely or chronically toxic by inhalation, the Permittees will operate the system to prevent escape of vapors, fumes, or other emissions into the air [WAC 173-303-806(4)(i)(i)(B) and WAC 173-303-640(5)(e), in accordance with WAC 173-303-680].

**III.10.K.1.b** Performance Standards

**III.10.K.1.b.i** The HLW Vitrification System must achieve a destruction and removal efficiency (DRE) of 99.99% for the principal organic dangerous constituents (PODCs) listed below [40 CFR §63.1203(c)(1) and 40CFR §63.1203(c)(2), in accordance with WAC 173-303-680(2)]:

RESERVED

DRE in this Permit Condition will be calculated in accordance with the formula given below:

$DRE=[1-(W_{out}/W_{in})] \times 100\%$

Where:

$W_{in}$=mass feed-rate of one principal organic dangerous constituent (PODC) in a waste feed stream; and

$W_{out}$=mass emission rate of the same PODC present in exhaust emissions prior to release to the atmosphere.

**III.10.K.1.b.ii** Particulate matter emissions from the HLW Vitrification System will not exceed 34 mg/dscm (0.015 grains/dscf) [40 CFR §63.1203(b)(7), in accordance with WAC 173-303-680(2)];

**III.10.K.1.b.iii** Hydrochloric acid and chlorine gas emissions from the HLW Vitrification System will not exceed 21 ppmv, combined [40 CFR §63.1203(b)(6), in accordance with WAC 173-303-680(2)];

**III.10.K.1.b.iv** Dioxin and Furan TEQ emissions from the HLW Vitrification System will not exceed 0.2 nanograms (ng)/dscm [40 CFR §63.1203(b)(1), in accordance with WAC 173-303-680(2)];

**III.10.K.1.b.v** Mercury emissions from the HLW Vitrification System will not exceed 45 µg/dscm [40 CFR §63.1203(b)(2), in accordance with WAC 173-303-680(2)];

**III.10.K.1.b.vi** Lead and cadmium emissions from the HLW Vitrification System will not exceed 120 µg/dscm, combined [40 CFR §63.1203(b)(3), in accordance with WAC 173-303-680(2)];

**III.10.K.1.b.vii** Arsenic, beryllium, and chromium emissions from the HLW Vitrification System will not exceed 97 µg/dscm, combined [40 CFR §63.1203(b)(4), in accordance with WAC 173-303-680(2)];

**III.10.K.1.b.viii** Carbon monoxide (CO) emission from the HLW Vitrification System will not exceed 100 parts per million (ppm) by volume, over an hourly rolling average (as measured and recorded by the continuous monitoring system), dry basis [40 CFR §63.1203(b)(5)(i), in accordance with WAC 173-303-680(2) and (3)];

**III.10.K.1.b.ix** Hydrocarbon emission from the HLW Vitrification System will not exceed 10 parts per million (ppm) by volume, over an hourly rolling average (as measured and recorded by the continuous monitoring system during demonstration testing required by this Permit), dry basis and reported as propane [40 CFR §63.1203(b)(5)(ii), in accordance with WAC 173-303-680(2) and (3)];

**III.10.K.1.b.x** If the emissions from the HLW Vitrification System exceed the emission rates listed in Permit Table III.10.K.E, as approved pursuant to Permit Condition III.10.C.11.c. or d., the Permittees will perform the following actions [WAC 173-303-680(2) and (3), and WAC 173-303-815(2)(b)(ii)]:

A. Verbally notify Ecology within twenty-four (24) hours of the discovery of exceeding the emission rate(s) as specified in Permit Condition I.E.21.

B. Submit to Ecology additional risk information to indicate that the increased emissions impact is off-set by decreased emission impact from one or more constituents expected to be emitted at the same time, and/or investigate the cause and impact of the exceedance of the emission rate(s) and submit a report of the

investigation findings to Ecology within fifteen (15) days of the discovery of exceeding the emission rate(s).

C. Based on the notification and any additional information, Ecology may provide, in writing, direction to the Permittees to stop dangerous and/or mixed waste feed to the HLW Vitrification System and/or to submit a revised Demonstration Test Plan as a permit modification pursuant to Permit Conditions III.10.C.2.e. and f., or III.10.C.2.g. The revised Demonstration Test Plan must include substantive changes to prevent failure from reoccurring.

The emission limits specified in Permit Conditions III.10.K.1.b.i. through III.10.K.1.b.ix. above, will be met for the HLW Vitrification System by limiting feed rates as specified in Permit Tables III.10.K.D and III.10.K.F, as approved/modified pursuant to Permit Condition III.10.J.5 and III.10.J.3.d.v., compliance with operating conditions specified in Permit Condition III.10.K.1.c. (except as specified in Permit Condition III.10.K.1.b.xii.), and compliance with Permit Condition III.10.K.1.b.xi.

**III.10.K.1.b.xi** Treatment effectiveness, feed-rates, and operating rates for dangerous and/or mixed waste management units contained in the HLW Building, but not included in Permit Table III.10.K.A, as approved/modified pursuant to Permit Condition III.10.J.5, will be as specified in Permit Sections III.10.D, III.10.E, III.10.F and consistent with the assumptions and basis which are reflected in Operating Unit Group 10, Appendix 6.3 of this Permit, as approved pursuant to Permit Condition III.10.C.11.b. For the purposes of this permit condition, Operating Unit Group 10, Appendix 6.3 will be superseded by Appendix 6.4 upon its approval pursuant to either Permit Conditions III.10.C.11.c. or d. [WAC 173-303-680(2) and (3), and WAC 173-303-815(2)(b)(ii)].

**III.10.K.1.b.xii** Compliance with the operating conditions specified in Permit Condition III.10.K.1.c., will be regarded as compliance with the required performance standards identified in Permit Conditions III.10.K.1.b.i. through x. However, if it is determined that during the effective period of this Permit that compliance with the operating conditions in Permit Condition III.10.K.1.c. is not sufficient to ensure compliance with the performance standards specified in Permit Conditions III.10.K.1.b.i. through x., the Permit may be modified, revoked, or reissued pursuant to Permit Conditions III.10.C.2.e. and f., or III.10.C.2.g.

**III.10.K.1.c** Operating Conditions [WAC 173-303-670(6), in accordance with WAC 173-303-680(2)and (3)]

The Permittees will operate the HLW Vitrification System in accordance with Operating Unit Group 10, Chapter 4 of this Permit, as updated pursuant to Permit Condition III.10.J.5.e.vi., Operating Unit Group 10, Appendix 10.18 of this Permit, as approved pursuant to Permit Conditions III.10.J.5.e. and f., and Operating Unit Group 10, Appendix 10.15 of this Permit, as approved pursuant to Permit Condition III.10.J.5.f., except as modified pursuant to Permit Conditions III.10.J.3, III.10.K.1.b.x., III.10.K.1.b.xii., III.10.K.1.h., and in accordance with and the following:

**III.10.K.1.c.i** The Permittees will operate the HLW Vitrification System in order to maintain the systems and process parameters listed in Permit Tables III.10.K.C and III.10.K.F, as approved/modified pursuant to Permit Conditions III.10.J.5 and III.J.3.d.v., within the set-points specified in Permit Table III.10.K.F.

**III.10.K.1.c.ii** The Permittees will operate the AWFCO systems, specified in Permit Table III.10.K.F, as approved/modified pursuant to Permit Conditions III.10.J.5 and III.J.3.d.v., to automatically cut-off and/or lock-out the dangerous and/or mixed

waste feed to HLW Vitrification System when the monitored operating conditions deviate from the set-points specified in Permit Table III.10.K.F.

**III.10.K.1.c.iii** The Permittees will operate the AWFCO systems, specified in Permit Table III.10.K.F, as approved/modified pursuant to Permit Conditions III.10.J.5 and III.J.3.d.v., to automatically cut-off and/or lock-out the dangerous and/or mixed waste feed to HLW Vitrification System when all instruments specified on Permit Table III.10.I.F for measuring the monitored parameters fails or exceeds its span value.

**III.10.K.1.c.iv** The Permittees will operate the AWFCO systems, specified in Permit Table III.10.K.F, as approved/modified pursuant to Permit Conditions III.10.J.5 and III.J.3.d.v., to automatically cut-off and/or lock out the dangerous and/or mixed waste feed to the HLW Vitrification System when any portion of the HLW Vitrification System is bypassed. The terms "bypassed" and "bypass event" as used in Permit Sections III.10.J and K will mean if any portion of the HLW Vitrification System is bypassed so that gases are not treated as during the Demonstration Test.

**III.10.K.1.c.v** In the event of a malfunction of the AWFCO systems listed in Permit Table III.10.K.F, as approved/modified pursuant to Permit Conditions III.10.J.5 and III.J.3.d.v., the Permittees will immediately, manually, cut-off the dangerous and/or mixed waste feed to the HLW Vitrification System. The Permittees will not restart the dangerous and/or mixed waste feed until the problem causing the malfunction has been identified and corrected.

**III.10.K.1.c.vi** The Permittees will manually cut-off the dangerous and/or mixed waste feed to the HLW Vitrification System when the operating conditions deviate from the limits specified in Permit Condition III.10.K.1.c.i., unless the deviation automatically activates the waste feed cut-off sequence specified in Permit Conditions III.10.K.1.c.ii., iii., and/or iv.

**III.10.K.1.c.vii** If greater than thirty (30) dangerous and/or mixed waste feed cut-off, combined, to the HLW Vitrification System occur due to deviations from Permit Table III.10.K.F, as approved/modified pursuant to Permit Conditions III.10.J.5 and III.J.3.d.v., within a sixty (60) day period, the Permittees will submit a written report to Ecology within five (5) calendar days of the thirty-first (31) exceedance including the information specified below. These dangerous and/or mixed waste feed cut-offs to the HLW Vitrification System, whether automatically or manually activated, are counted if the specified set-points are deviated from while dangerous and/or mixed waste and waste residues continue to be processed in the HLW Vitrification System. A cascade event is counted at a frequency of one (1) towards the first waste feed cut-off parameter, specified on Permit Table III.10.K.F, from which the set-point is deviated:

A. The parameter(s) that deviated from the set-point(s) in Permit Table III.10.K.F;

B. The magnitude, dates, and duration of the deviations;

C. Results of the investigation of the cause of the deviations; and

D. Corrective measures taken to minimize future occurrences of the deviations.

**III.10.K.1.c.viii** If greater than thirty (30) dangerous and/or mixed waste feed cut-offs, combined, to the HLW Vitrification System occ ur due to deviations from Permit Table III.10.K.F, as approved/modified pursuant to Permit Conditions III.10.J.5 and III.J.3.d.v., within a thirty (30) day period, the Permittees will submit the written report required to be submitted pursuant to Permit Condition III.10.K.1.c.vii. to Ecology, on the first business day following the thirty-first exceedance. These dangerous and/or mixed

waste feed cut-offs to the HLW Vitrification System, whether automatically or manually activated, are counted if the specified set-points are deviated from while dangerous and/or mixed waste and waste residues continue to be processed in the HLW Vitrification System. A cascade event is counted at a frequency of one (1) towards the first waste feed cut-off parameter, specified on Permit Table III.10.K.F, from which the set-point is deviated:

In accordance with WAC 173-303-680(2) and (3), the Permittees may not resume dangerous and/or mixed waste feed to the HLW Vitrification System until this written report has been submitted; and

A. Ecology has authorized the Permittees, in writing, to resume dangerous and/or mixed waste feed, or

B. Ecology has not, within seven (7) days, notified the Permittees in writing of the following:

1. The Permittees written report does not document that the corrective measures taken will minimize future exceedances.

2. The Permittees must take further corrective measures and document that these further corrective measures will minimize future exceedances.

**III.10.K.1.c.ix** If any portion of the HLW Vitrification System is bypassed while treating dangerous and/or mixed waste, it will be regarded as non-compliance with the operating conditions specified in Permit Condition III.10.K.1.c. and the performance standards specified in Permit Condition III.10.K.1.b. After such a bypass event, the Permittees will perform the following actions:

A. Investigate the cause of the bypass event.

B. Take appropriate corrective measures to minimize future bypasses.

C. Record the investigation findings and corrective measures in the operating record.

D. Submit a written report to Ecology within five (5) days of the bypass event documenting the result of the investigation and corrective measures.

**III.10.K.1.c.x** The Permittees will control fugitive emissions from the HLW Vitrification System by maintaining the melter under negative pressure.

**III.10.K.1.c.xi** Compliance with the operating conditions specified in Permit Condition III.10.K.1.c. will be regarded as compliance with the required performance standards identified in Permit Condition III.10.K.1.b. However, evidence that compliance with these operating conditions is insufficient to ensure compliance with the performance standards, will justify modification, revocation, or re-issuance of this Permit, in accordance with Permit Conditions III.10.C.2.e. and f., or III.10.C.2.g.

**III.10.K.1.d** Inspection Requirements [WAC 173-303-680(3)]

**III.10.K.1.d.i** The Permittees will inspect the HLW Vitrification System in accordance with the Inspection Plan in Operating Unit Group 10, Chapter 6A of this Permit, as modified in accordance with Permit Condition III.10.C.5.c.

**III.10.K.1.d.ii** The inspection data for HLW Vitrification System will be recorded, and the records will be placed in the WTP Unit operating record for HLW Vitrification System, in accordance with Permit Condition III.10.C.4.

**III.10.K.1.d.iii** The Permittees will comply with the inspection requirements specified in Operating Unit Group 10, Appendix 10.15 of this Permit, as approved pursuant to Permit

Condition III.10.J.5.f., and as modified by Permit Conditions III.10.J.3, III.10.K.1.b.x., III.10.K.1.b.xii., and III.10.K.1.h.

**III.10.K.1.e** Monitoring Requirements [WAC 173-303-670(5), WAC 173-303-670(6), WAC 173-303-670(7), and WAC 173-303-807(2), in accordance with WAC 173-303-680(3)]

**III.10.K.1.e.i** Upon receipt of a written request from Ecology, the Permittees will perform sampling and analysis of the dangerous and/or mixed waste and exhaust emissions to verify that the operating requirements established in the permit achieve the performance standards delineated in this Permit.

**III.10.K.1.e.ii** The Permittees will comply with the monitoring requirements specified in the Operating Unit Group 10, Appendices 10.2, 10.3, 10.7, 10.13, 10.15, and 10.18 of this Permit, as approved pursuant to Permit Condition III.10.J.5, and as modified by Permit Conditions III.10.J.3, III.10.K.1.h., and III.10.K.1.b.x. and xii.

**III.10.K.1.e.iii** The Permittees will operate, calibrate, and maintain the carbon monoxide and hydrocarbon continuous emission monitors (CEM) specified in this Permit in accordance with Performance Specifications 4B and 8A of 40 CFR Part 60, Appendix B, in accordance with Appendix to Subpart EEE of 40 CFR Part 63, and Operating Unit Group 10 Appendix 10.15 of this Permit, as approved pursuant to Permit Condition III.10.J.5.f., and as modified by Permit ConditionsIII.10.J.3, III.10.K.1.h., and III.10.K.1.b.x. and xii.

**III.10.K.1.e.iv** The Permittees will operate, calibrate, and maintain the instruments specified on Permit Tables III.10.K.C and F, as approved/modified pursuant to Permit Conditions III.10.J.5 and III.J.3.d.v., in accordance with Operating Unit Group 10, Appendix 10.15 of this Permit, as approved pursuant to Permit Condition III.10.J.5.f., and as modified by Permit Conditions III.10.J.3, III.10.K.1.h., and III.10.K.1.b.x. and xii.

**III.10.K.1.e.v** The Permittees shall calibrate, inspect, and maintain or replace the following cooling water flow and temperature instruments: (Melter 1: FT/FI-0306, FT/FI-0316, FT/FI-0321, FT/FI-0326, FT/FI-0336, TE/TT/TI-0352; Melter 2: FT/FI-2306, FT/FI-2316, FT/FI-2321, FT/FI-2326, FT/FI-2336, TE/TT/TI-2352) in accordance with manufacturer's recommendations.

**III.10.K.1.f** Recordkeeping Requirements [WAC 173-303-380 and WAC 173-303-680(3)]

**III.10.K.1.f.i** The Permittees will record and maintain in the WTP Unit operating record for the HLW Vitrification System, all monitoring, calibration, maintenance, test data, and inspection data compiled under the conditions of this Permit, in accordance with Permit Conditions III.10.C.4 and 5 as modified by Permit Conditions III.10.J.3, III.10.K.1.h., and III.10.K.1.b.x. and xii.

**III.10.K.1.f.ii** The Permittees will record in the WTP Unit operating record the date, time, and duration of all automatic waste feed cut-offs and/or lockouts, including the triggering parameters, reason for the deviation, and recurrence of the incident. The Permittees will also record all incidents of AWFCO system function failures, including the corrective measures taken to correct the condition that caused the failure.

**III.10.K.1.f.iii** The Permittees will submit to Ecology an annual report each calendar year within ninety (90) days following the end of the year. The report will include the following information:

A. Total dangerous and/or mixed waste feed processing time for the HLW Vitrification System.

B. Date/Time of all HLW Vitrification System startups and shutdowns.

C. Date/Time/Duration/Cause/Corrective Action taken for all HLW Vitrification System shutdowns caused by malfunction of either process or control equipment.

D. Date/Time/Duration/Cause/Corrective Action taken for all instances of dangerous and/or mixed waste feed cut-off due to deviations from Permit Table III.10.K.F, as approved/modified pursuant to Permit Conditions III.10.J.5 and III.10J.3.d.v.

**III.10.K.1.f.iv** The Permittees will submit an annual report to Ecology each calendar year within ninety (90) days following the end of the year of all quarterly CEM Calibration Error and Annual CEM Performance Specification Tests conducted in accordance with Permit Condition III.10.K.1.e.iii.

**III.10.K.1.f.v** The Permittees shall maintain operating and calibration/maintenance records for Ecology's inspection for the following cooling water flow and temperature instruments (Melter 1: FT/FI-0306, FT/FI-0316, FT/FI-0321, FT/FI-0326, FT/FI-0336, TE/TT/TI-0352; Melter 2: FT/FI-2306, FT/FI-2316, FT/FI-2321, FT/FI-2326, FT/FI-2336, TE/TT/TI-2352).

**III.10.K.1.f.vi** The Permittees shall maintain refractory thermocouple temperature data for Ecology inspection.

**III.10.K.1.g** Closure

The Permittees will close the HLW Vitrification System in accordance with Operating Unit Group 10, Addendum H of this Permit, as approved pursuant to Permit Condition III.10.C.8.

**III.10.K.1.h** Periodic Emission Re-testing Requirements [WAC 173-303-670(5), WAC 173-303-670(7), and WAC 173-303-807(2), in accordance with WAC 173-303-680(2) and (3)].

**III.10.K.1.h.i** Dioxin and Furan Emission Testing

A. Within eighteen (18) months of commencing operation pursuant to Permit Section III.10.K, the Permittees will submit to Ecology for approval, a Dioxin and Furan Emission Test Plan (DFETP) for the performance of emission testing of the HLW Vitrification System gases for dioxin and furans during "Normal Operating Conditions" as a permit modification in accordance with Permit Conditions III.10.C.2.e. and f. The DFETP will include all elements applicable to dioxin and furan emission testing included in the "Previously Approved Demonstration Test Plan," applicable EPA promulgated test methods and procedures in effect at the time of the submittal, and projected commencement and completion dates for dioxin and furan emission test. "Normal Operating Conditions" will be defined for the purposes of this permit condition as follows:

1. Carbon monoxide emissions, dangerous and/or mixed waste feed-rate, and automatic waste feed cut-off parameters specified on Permit Table III.10.K.F (as approved/modified pursuant to Permit Conditions III.10.J.5 and III.10.J.3.d.v), that were established to maintain compliance with Permit

Condition III.10.K.1.b.iv., as specified in Operating Unit Group 10, Appendix 10.15 of this Permit (as approved pursuant to Permit Condition III.10.J.3.d. and in accordance with III.10.K.1.b.xii. and III.10.K.1.c.xi.), are held within the range of the average value over the previous twelve (12) months and the set-point value specified on Permit Table III.10.K.F. The average value is defined as the sum of the rolling average values recorded over the previous twelve (12) months divided by the number of rolling averages recorded during that time. The average value will not include calibration data, malfunction data, and data obtained when not processing dangerous and/or mixed waste.

2. Feed-rate of metals, ash, and chlorine/chloride are held within the range of the average value over the previous twelve (12) months and the set-point value specified on Permit Table III.10.K.D (as approved/modified pursuant to Permit Conditions III.10.J.5 and III.10.J.3.d.v). Feed-rate of organics as measured by TOC are held within the range of the average value over the previous twelve (12) months. The average value is defined as the sum of the rolling average values recorded over the previous twelve (12) months divided by the number of rolling averages recorded during that time. The average value will not include data obtained when not processing dangerous and/or mixed waste.

For purposes of this permit Condition, the "Previously Approved Demonstration Test Plan" is defined to include the Demonstration Test Plan approved pursuant to Permit Condition III.10.J.5.f.

B. Within sixty (60) days of Ecology's approval of the DFETP, or within thirty-one (31) months of commencing operation pursuant to Permit Section III.10.K, whichever is later, the Permittees will implement the DFETP approved, pursuant to Permit Condition III.10.K.1.h.i.A.

C. The Permittees will resubmit the DFETP, approved pursuant to Permit Condition III.10.K.1.h.i.A, revised to include applicable EPA promulgated test methods and procedures in effect at the time of the submittal, and projected commencement and completion dates for dioxin and furan emission test as a permit modification in accordance with Permit Conditions III.10.C.2.e. and f. at twenty-four (24) months from the implementation date of the testing required pursuant to Permit Condition III.10.K.1.h.i.A.and at reoccurring eighteen (18) month intervals from the implementation date of the previously approved DFETP. The Permittees will implement these newly approved revised DFETPs every thirty-one (31) months from the previous approved DFETP implementation date or within sixty (60) days of the newly Ecology approved revised DFETP, whichever is later, for the duration of this Permit.

D. The Permittees will submit a summary of operating data collected pursuant to the DFETPs in accordance with Permit Conditions III.10.K.1.h.i.A and C to Ecology upon completion of the tests. The Permittees will submit to Ecology the complete test report within ninety (90) calendar days of completion of the testing. The test reports will be certified as specified in WAC 173-303-807(8), in accordance with WAC 173-303-680(2) and (3).

E. If any calculations or testing results collected pursuant to the DFETPs in accordance with Permit Conditions III.10.K.1.h.i.A and C show that one or more of the performance standards listed in Permit Condition III.10.K.1.b., with the exception of Permit Condition III.10.K.1.b.x., for the HLW Vitrification System

were not met during the emission test, the Permittees will perform the following actions:

1. Immediately stop dangerous and/or mixed waste feed to the HLW Vitrification System under the mode of operation that resulted in not meeting the performance standard(s).
2. Verbally notify Ecology within twenty-four (24) hours of discovery of not meeting the performance standard(s) as specified in Permit Condition I.E.21.
3. Investigate the cause of the failure and submit a report of the investigation findings to Ecology within fifteen (15) days of discovery of not meeting the performance standard(s).
4. Submit to Ecology within fifteen (15) days of discovery of not meeting the performance standard(s) documentation supporting a mode of operation where all performance standards listed in Permit Condition III.K.1.b., with the exception of Permit Condition III.10.K.1.b.x., for the HLW Vitrification System were met during the demonstration test, if any such mode was demonstrated.
5. Based on the information provided to Ecology by the Permittees, pursuant to Permit Conditions III.10.K.1.h.i.E.1 through 4 above, and any additional information, Ecology may provide, in writing, direction to the Permittees to stop dangerous and/or mixed waste feed to the HLW Vitrification System and/or amend the mode of operation the Permittees are allowed to continue operations prior to Ecology approval of the revised Demonstration Test Plan pursuant to Permit Condition III.10. K.1.h.i.E.6.
6. Submit to Ecology within one hundred and twenty (120) days of discovery of not meeting the performance standard(s) a revised Demonstration Test Plan requesting approval to retest as a permit modification pursuant to Permit Conditions III.10.C.2.e. and f. The revised Demonstration Test Plan must include substantive changes to prevent failure from reoccurring reflecting performance under operating conditions representative of the extreme range of normal conditions, and include revisions to Permit Tables III.10.K.D and F.

F. If any calculations or testing results collected pursuant to the DFETPs in accordance with Permit Conditions III.10.K.1.h.i.A and C show that any emission rate for any constituent listed in Permit Table III.10.K.E, as approved/modified pursuant to Permit Conditions III.10.C.11.c. or d., is exceeded for HLW Vitrification System during the emission test, the Permittees will perform the following actions:

1. Verbally notify Ecology within twenty-four (24) hours of the discovery of exceeding the emission rate(s) as specified in Permit Condition I.E.21;
2. Submit to Ecology additional risk information to indicate that the increased emissions impact is off-set by decreased emission impact from one or more constituents expected to be emitted at the same time, and/or investigate the cause and impact of the exceedance and submit a report of the investigation findings to Ecology within fifteen (15) days of this discovery of exceeding the emission rate(s); and
3. Based on the notification and any additional information, Ecology may provide, in writing, direction to the Permittees to stop dangerous and/or

mixed waste feed to the HLW Vitrification System and/or to submit a revised Demonstration Test Plan as a permit modification pursuant to Permit Conditions III.10.C.2.e. and f., or III.10.C.2.g. The revised Demonstration Test Plan must include substantive changes to prevent failure from reoccurring reflecting performance under operating conditions representative of the extreme range of normal conditions, and include revisions to Permit Tables III.10.K.D and F.

**III.10.K.1.h.ii** Non-organic Emission Testing

A. Within forty-eight (48) months of commencing operation pursuant to Permit Section III.10.K, the Permittees will resubmit to Ecology for approval the "Previously Approved Demonstration Test Plan" revised as a permit modification in accordance with Permit Conditions III.10.C.2.e. and f. The revised Demonstration Test Plan (RDTP) will include applicable EPA promulgated test methods and procedures in effect at the time of the submittal, projected commencement and completion dates for emission testing to demonstrate performance standards specified in Permit Conditions III.10.K.1.b.ii., iii., v., vi., and vii., and non-organic emissions as specified in Permit Table III.10.K.E, as approved/modified pursuant to Permit Conditions III.10.J.3.d. and III.10.C.11.c. or d., under "Normal Operating Conditions." "Normal Operating Conditions" will be defined for the purposes of this permit condition as follows:

1. Carbon monoxide emissions, dangerous and/or mixed waste feed-rate, and automatic waste feed cut-off parameters specified in Permit Table III.10.K.F, as approved/modified pursuant to Permit Conditions III.10.J.3.d. and III.10.C.11.c. or d., that were established to maintain compliance with Permit Conditions III.10.K.1.b.ii., iii., v., vi., and vii., and non-organic emissions, as specified in Permit Table III.10.K.E, as specified in Operating Unit Group 10, Appendix 10.15 of this Permit (as approved pursuant to Permit Conditions III.10.J.3.d. and III.10.C.11.c. or d.), are held within the range of the average value over the previous twelve (12) months and the set-point value specified on Permit Table III.10.K.F. The average value is defined as the sum of the rolling average values recorded over the previous twelve (12) months divided by the number of rolling averages recorded during that time. The average value will not include calibration data, malfunction data, and data obtained when not processing dangerous and/or mixed waste; and

2. Feed-rate of metals, ash, and chlorine/chloride are held within the range of the average value over the previous twelve (12) months and the set-point value specified on Permit Table III.10.K.D, as approved/modified pursuant to Permit Conditions III.10.J.3.d. and III.10.C.11.c. or d. The average value is defined as the sum of all rolling average values recorded over the previous twelve (12) months divided by the number of rolling averages recorded during that time. The average value will not include data obtained when not processing dangerous and/or mixed waste.

For purposes of this permit Condition, the "Previously Approved Demonstration Test Plan" is defined to include the Demonstration Test Plan approved pursuant to Permit Condition III.10.J.5.f.

B. Within sixty (60) days of Ecology's approval of the RDTP, or within sixty (60) months of commencing operation pursuant to Permit Section III.10.K, whichever

is later, the Permittees will implement the RDTP approved pursuant to Permit Condition III.10.K.1.h.ii.A.

C. The Permittees will resubmit the RDTP, approved pursuant to Permit Condition III.10.K.1.h.ii.A, revised to include applicable EPA promulgated test methods and procedures in effect at the time of the submittal, and projected commencement and completion dates for emission test as a permit modification in accordance with Permit Conditions III.10.C.2.e. and f. at forty-eight (48) months from the implementation date of the testing required pursuant to Permit Condition III.10.K.1.h.ii.A. and at reoccurring forty-eight (48) month intervals from the implementation date of the previously approved RDTP. The Permittees will implement these newly approved revised RDTP, every sixty (60) months from the previous approved RDTP implementation date or within sixty (60) days of the newly Ecology approved revised RDTP, whichever is later, for the duration of this Permit.

D. The Permittees will submit a summary of operating data collected pursuant to the RDTPs in accordance with Permit Conditions III.10.K.1.h.ii.A and C to Ecology upon completion of the tests. The Permittees will submit to Ecology the complete test report within ninety (90) calendar days of completion of the testing. The test reports will be certified pursuant to WAC 173-303-807(8), in accordance with WAC 173-303-680(2) and (3).

E. If any calculations or testing results collected pursuant to the DFETPs in accordance with Permit Conditions III.10.K.1.h.ii.A and C show that any emission rate for any constituent listed in Permit Table III.10.K.E, as approved/modified pursuant to Permit Conditions III.10.J.3.d. and III.10.C.11.c. or d., is exceeded for HLW Vitrification System during the emission test, the Permittees will perform the following actions:

1. Verbally notify Ecology within twenty-four (24) hours of the discovery of exceeding the emission rate(s) as specified in Permit Condition I.E.21.
2. Submit to Ecology additional risk information to indicate that the increased emissions impact is off-set by decreased emission impact from one or more constituents expected to be emitted at the same time, and/or investigate the cause and impact of the exceedance and submit a report of the investigation findings to Ecology within fifteen (15) days of this discovery of exceeding the emission rate(s).
3. Based on the notification and any additional information, Ecology may provide, in writing, direction to the Permittees to stop dangerous and/or mixed waste feed to the HLW Vitrification System and/or to submit a revised Demonstration Test Plan as a permit modification pursuant to Permit Conditions III.10.C.2.e. and f., or III.10.C.2.g. The revised Demonstration Test Plan must include substantive changes to prevent failure from reoccurring reflecting performance under operating conditions representative of the extreme range of normal conditions, and include revisions to Permit Tables III.10.K.D and III.10.K.F.

F. If any calculations or testing results collected pursuant to the DFETPs in accordance with Permit Conditions III.10.K.1.h.ii.A and C show that one or more of the performance standards listed in Permit Condition III.10.K.1.b., with the exception of Permit Condition III.10.K.1.b.x., for the HLW Vitrification System were not met during the emission test, the Permittees will perform the following actions:

1. Immediately stop dangerous and/or mixed waste feed to the HLW Vitrification System under the mode of operation that resulted in not meeting the performance standard(s).
2. Verbally notify Ecology within twenty-four (24) hours of discovery of not meeting the performance standard(s), as specified in Permit Condition I.E.21.
3. Investigate the cause of the failure and submit a report of the investigation findings to Ecology within fifteen (15) days of discovery of not meeting the performance standard(s).
4. Submit to Ecology within fifteen (15) days of discovery of not meeting the performance standard(s) documentation supporting a mode of operation where all performance standards listed in Permit Condition III.K.1.b., with the exception of Permit Condition III.10.K.1.b.x., for the HLW Vitrification System were met during the demonstration test, if any such mode was demonstrated.
5. Based on the information provided to Ecology by the Permittees pursuant to Permit Conditions III.10.K.1.h.ii.F.1 through 4 above, and any additional information, Ecology may provide, in writing, direction to the Permittees to stop dangerous and/or mixed waste feed to the HLW Vitrification System and/or amend the mode of operation the Permittees are allowed to continue operations prior to Ecology approval of the revised Demonstration Test Plan pursuant to Permit Condition III.10.K.1.h.ii.F.6.
6. Submit to Ecology within one hundred and twenty (120) days of discovery of not meeting the performance standard(s) a revised Demonstration Test Plan requesting approval to retest as a permit modification pursuant to Permit Conditions III.10.C.2.e. and f. The revised Demonstration Test Plan must include substantive changes to prevent failure from reoccurring reflecting performance under operating conditions representative of the extreme range of normal conditions, and include revisions to Permit Tables III.10.K.D and F.

**III.10.K.1.h.iii** Other Emission Testing

A. Within seventy-eight (78) months of commencing operation pursuant to Permit Section III.10.K, the Permittees will resubmit to Ecology for approval the "Previously Approved Demonstration Test Plan" revised as a permit modification in accordance with Permit Conditions III.10.C.2.e. and f. The revised Demonstration Test Plan (RDTP) will include applicable EPA promulgated test methods and procedures in effect at the time of the submittal, projected commencement and completion dates for emission testing to demonstrate performance standards as specified in Permit Conditions III.10.K.1.b.viii. and ix., and emissions as specified on Permit Table III.10.K.E, as approved/modified pursuant to Permit Conditions III.10.J.3.d. and III.10.C.11.c. or d., not addressed under Permit Conditions III.10.K.1.h.i. or ii. under "Normal Operating Conditions." "Normal Operating Conditions" will be defined for the purposes of this permit Condition as follows:

1. Carbon monoxide emissions, dangerous and/or mixed waste feed-rate, and automatic waste feed cut-off parameters specified on Permit Table III.10.K.F, as approved/modified pursuant to Permit Condition III.10.J.3.d. and III.10.C.11.c. or d., that were established to maintain compliance with Permit Conditions III.10.K.1.b.viii. and ix., and emissions as specified on Permit Table III.10.K.E, not addressed under Permit Conditions III.10.K.1.h.i. or ii.

as specified in Operating Unit Group 10, Appendix 10.15 of this Permit, as approved pursuant to Permit Condition III.10.J.3.d., and in accordance with Permit Conditions III.10.K.1.b.xii. and III.10.K.1.c.xi. are held within the range of the average value over the previous twelve (12) months and the set-point value specified on Permit Table III.10.K.F. The average value is defined as the sum of all rolling average values recorded over the previous twelve (12) months divided by the number of rolling averages recorded during that time. The average value will not include calibration data, malfunction data, and data obtained when not processing dangerous and/or mixed waste; and

2. Feed-rate of metals, ash, and chlorine/chloride are held within the range of the average value over the previous twelve (12) months and the set-point value specified on Permit Table III.10.K.D, as approved/modified pursuant to Permit Conditions III.10.J.3.d. and III.10.C.11.c. or d. Feed-rate of organics as measured by TOC are held within the range of the average value over the previous twelve (12) months. The average value is defined as the sum of the rolling average values recorded over the previous twelve (12) months divided by the number of rolling averages recorded during that time. The average value will not include data obtained when not processing dangerous and/or mixed waste.

For purposes of this permit Condition, the "Previously Approved Demonstration Test Plan" is defined to include the Demonstration Test Plan approved pursuant to Permit Condition III.10.J.5.f.

B. Within sixty (60) days of Ecology's approval of the RDTP, or within ninety-one (91) months of commencing operation pursuant to Permit Section III.10.K, whichever is later, the Permittees will implement the RDTP approved pursuant to Permit Condition III.10.K.1.h.iii.A.

C. The Permittees will submit a summary of operating data collected pursuant to the RDTPs in accordance with Permit Condition III.10.K.1.h.iii.A to Ecology upon completion of the tests. The Permittees will submit to Ecology the complete test report within ninety (90) calendar days of completion of the testing. The test reports will be certified as specified in WAC 173-303-807(8), in accordance with Permit Condition WAC 173-303-680(2) and (3).

D. If any calculations or testing results show that one or more of the performance standards listed in Permit Condition III.10.K.1.b., with the exception of Permit Condition III.10.K.1.b.x., for the HLW Vitrification System were not met during the emission test, the Permittees will perform the following actions:

1. Immediately stop dangerous and/or mixed waste feed to the HLW Vitrification System under the mode of operation that resulted in not meeting the performance standard(s).
2. Verbally notify Ecology within twenty-four (24) hours of discovery of not meeting the performance standard(s), as specified Permit Condition I.E.21.
3. Investigate the cause of the failure and submit a report of the investigation findings to Ecology within fifteen (15) days of discovery of not meeting the performance standard(s).
4. Submit to Ecology within fifteen (15) days of discovery of not meeting the performance standard(s) documentation supporting a mode of operation where all performance standards listed in Permit Condition III.10.K.1.b., with the exception of Permit Condition III.10.K.1.b.x., for the HLW Vitrification

System were met during the demonstration test, if any such mode was demonstrated.

5. Based on the information provided to Ecology by the Permittees pursuant to Permit Conditions III.10.K.1.h.iii.D.1 through 4 above, and any additional information, Ecology may provide, in writing, direction to the Permittees to stop dangerous and/or mixed waste feed to the HLW Vitrification System and/or amend the mode of operation the Permittees are allowed to continue operations prior to Ecology approval of the revised Demonstration Test Plan, pursuant to Permit Condition III.10.K.1.h.iii.D.6.
6. Submit to Ecology within one hundred and twenty (120) days of discovery of not meeting the performance standard(s) a revised Demonstration Test Plan requesting approval to retest as a permit modification pursuant to Permit Conditions II.10.C.2.e. and f. The revised Demonstration Test Plan must include substantive changes to prevent failure from reoccurring reflecting performance under operating conditions representative of the extreme range of normal conditions, and include revisions to Permit Tables III.10.K.D and F.

E. If any calculations or testing results show that any emission rate for any constituent listed in Permit Table III.10.K.E, as approved/modified pursuant to Permit Condition III.10.C.11.c. or d., is exceeded for HLW Vitrification System during the emission test, the Permittees will perform the following actions:

1. Verbally notify Ecology within twenty-four (24) hours of the discovery of exceeding the emission rate(s) as specified in Permit Condition I.E.21;
2. Submit to Ecology additional risk information to indicate that the increased emissions impact is off-set by decreased emission impact from one or more constituents expected to be emitted at the same time, and/or investigate the cause and impact of the exceedance of the emission rate(s) and submit a report of the investigation findings to Ecology within fifteen (15) days of the discovery of the exceedance of the emission rate(s); and
3. Based on the notification and any additional information, Ecology may provide, in writing, direction to the Permittees to stop dangerous and/or mixed waste feed to the HLW Vitrification System and/or to submit a revised Demonstration Test Plan as a permit modification pursuant to Permit Conditions III.10.C.2.e. and f., or III.10.C.2.g. The revised Demonstration Test Plan must include substantive changes to prevent failure from reoccurring reflecting performance under operating conditions representative of the extreme range of normal conditions, and include revisions to Permit Tables III.10.K.D and F.

This page intentionally left blank.

**Table III.10.K.A - HLW Vitrification System Description**

| Sub-system Description | Sub-System Designation | Engineering Description (Drawing Nos., etc.) | Narrative Description, Tables, and Figures |
|---|---|---|---|
| RESERVED | RESERVED | RESERVED | RESERVED |
| [a]Permit Table III.10.K.A will be completed in accordance with Permit Condition III.10.J.5.e.x., prior to initiating Permit Condition III.10.K.1. See Permit Table III.10.J.A for the current HLW Vitrification System Description. | | | |

1

**Table III.10.K.B - HLW Vitrification System Secondary Containment Systems Including Sumps and Floor Drains**

| Sump/Floor Drain I.D.# & Room Location | Maximum Sump Capacity (gallons) | Sump Dimensions[b] (feet) & Materials of Construction | Engineering Description (Drawing Nos., Specification Nos., etc.) |
|---|---|---|---|
| RESERVED | RESERVED | RESERVED | RESERVED |
| [a]Permit Table III.10.K.B will be completed in accordance with Permit Condition III.10.J.5.b.vii., prior to initiating Permit Condition III.10.K.1. See Permit Table III.10.J.B for the current HLW Vitrification System Secondary Containment Systems Including Sumps and Floor Drains.<br>[b]Dimensions listed are based on permitted design. Actual dimensions may vary within plus or minus (TBD). | | | |

2

**Table III.10.K.C - HLW Vitrification System Process and Leak Detection System Instruments and Parameters**

| Sub-system Locator and Name (including P&ID) | Control Parameter | Type of Measuring or Leak Detection Instrument | Location of Measuring Instrument (Tag No.) | Instrument Range | Failure State | Expected Range | Instrument Accuracy | Instrument Calibration Method No. and Range |
|---|---|---|---|---|---|---|---|---|
| RESERVED | RESERVED | RESERVED | RESERVED | RESERVED | RESERVED | RESERVED | RESERVED | RESERVED |
| [a]Permit Table III.10.K.C will be completed in accordance with Permit Condition III.10.J.5.e.ix., prior to initiating Permit Condition III.10.K.1. See Permit Table III.10.J.C for the current HLW Vitrification System Process and Leak Detection System Instruments and Parameters. | | | | | | | | |

3

This page intentionally left blank.

**Table III.10.K.D – Maximum Feed-rates to HLW Vitrification System (RESERVED)**

| Description of Waste | Normal Operation |
|---|---|
| Dangerous and/or mixed waste Feed Rate | RESERVED |
| Ash Feed Rate | RESERVED |
| Total Chlorine/Chloride Feed Rate | RESERVED |
| Total Metal Feed Rates | RESERVED |

**Table III.10.K.E – HLW Vitrification System Estimated Emission Rates (RESERVED)**

| Chemicals | CAS Number | Emission Rates (grams/second) |
|---|---|---|
| RESERVED | RESERVED | RESERVED |

**TABLE III.10.K.F - HLW Vitrification System Waste Feed Cut-off Parameters* [1](RESERVED)**

| Sub-system Designation | Instrument Tag Number | Parameter Description | Set-points During Normal Operation |
|---|---|---|---|
| RESERVED | RESERVED | RESERVED | RESERVED |

*A continuous monitoring system will be used as defined in Permit Section III.10.C.1.

[1]Maximum Feed-rate will be set based on not exceeding any of the constituent (e.g., metals, ash, and chlorine/chloride) feed limits specified on Table III.10.K.D. of this Permit

## III.10.L LABORATORY MISCELLANEOUS UNITS (RESERVED)

## III.10.M EMF MISCELLANEOUS UNIT SYSTEMS

Unless otherwise noted in Table III.10.M.A, for purposes of Permit Section III.10.M., where reference is made to WAC 173-303-640, the following substitutions apply: substitute the terms "EMF Miscellaneous Unit System(s)" for "tank system(s)," "miscellaneous unit(s)" for "tank(s)," "equipment" for "ancillary equipment," and "miscellaneous unit(s) or equipment of a EMF Miscellaneous Unit System" for "component(s)" in accordance with WAC 173-303-680. Miscellaneous unit systems, exempt from the WAC-173-303-640 requirements in Permit Section III.10.M are noted as exempt in Table III.10.M.A.

### III.10.M.1 Waste and Storage Limits

**III.10.M.1.a** The Permittees may process, in the EMF Miscellaneous Unit Systems listed in Permit Table III.10.M.A, as approved/modified pursuant to Permit Condition III.10.M.9, all dangerous and mixed waste listed in the Part A Forms, Operating Unit Group 10, Chapter 1 of this Permit, and in accordance with in the WAP, Operating Unit Group 10, Chapter 3/Chapter 3A of this Permit, as approved pursuant to Permit Condition III.10.C.3. Total EMF Miscellaneous Unit dangerous and mixed waste storage at the Facility will not exceed the limits specified in Permit Table III.10.M.A.

**III.10.M.1.b** The Permittees may process dangerous and mixed waste only in approved EMF Miscellaneous Unit Systems listed in Permit Table III.10.M.A in accordance with Permit Section III.10.M and in accordance with Operating Unit Group 10, Chapters 1.0 and 4.0 of this Permit, and Operating Unit Group 10, Appendices 13.1 through 13.14 of this Permit, as approved pursuant to Permit Conditions III.10.M.9.b. through e. The Permittees will limit the total volume of wastes to quantities specified for the individual miscellaneous units listed in Permit Table III.10.M.A.

**III.10.M.1.c** RESERVED

**III.10.M.1.d** The Permittees will ensure all certifications required by specialists (e.g., independent, qualified, registered professional engineer; independent corrosion expert; independent, qualified installation inspector; etc.) use the following statement or equivalent pursuant to Permit Condition III.10.C.10:

"I, (Insert Name) have (choose one or more of the following: overseen, supervised, reviewed, and/or certified) a portion of the design or installation of a new miscellaneous unit system or component located at (address), and owned/operated by (name(s)). My duties were: (e.g., installation inspector, testing for tightness, etc.), for the following miscellaneous unit system components (e.g., the venting piping, etc.), as required by the Dangerous Waste Regulations, namely, WAC 173-303-640(3) (applicable paragraphs (i.e., (a) through (g)) in accordance with WAC 173-303-680).

"I certify under penalty of law that I have personally examined and am familiar with the information submitted in this document and all attachments and that, based on my inquiry of those individuals immediately responsible for obtaining the information, I believe that the information is true, accurate, and complete. I am aware that there are significant penalties for submitting false information, including the possibility of fine and imprisonment."

**III.10.M.1.e** In all future narrative permit submittals, the Permittees will include Miscellaneous Unit System names with the unit designation (e.g., Evaporator Separator Vessel; DEP-EVAP-00001).

**III.10.M.2 Miscellaneous Unit Systems Design and Construction [WAC 173-303-640, in accordance with WAC 173-303-680(2) and WAC 173-303-340].**

**III.10.M.2.a** The Permittees will construct the EMF Miscellaneous Unit Systems identified in Permit Table III.10.M.A, as specified in Operating Unit Group 10, Appendices 13.1 through 13.14 of this Permit, as approved pursuant to Permit Conditions III.10.M.9.b., III.10.M.9.c., and III.10.M.9.d.

**III.10.M.2.b** The Permittees will construct secondary containment systems for the EMF Miscellaneous Unit Systems identified in Permit Tables III.10.M.A, as specified in Operating Unit Group 10, Appendices 13.2, 13.4 through 13.14 of this Permit, as approved pursuant to Permit Conditions III.10.M.9.b., III.10.M.9.c., and III.10.M.9.d.

**III.10.M.2.c** Modifications to approved design, plans, and specifications in Operating Unit Group 10 of this Permit for the EMF Miscellaneous Unit Systems will be allowed only in accordance with Permit Conditions III.10.C.2.e and f, or III.10.C.2.g, III.10.C.9.d, e, and h.

**III.10.M.3 Miscellaneous Unit System Installation and Certification [WAC 173-303-640, in accordance with WAC 173-303-680(2) and (3), and WAC 173-303-340].**

**III.10.M.3.a** The Permittees must ensure that proper handling procedures are adhered to in order to prevent damage to EMF Miscellaneous Unit Systems during installation. Prior to covering, enclosing, or placing a new EMF Miscellaneous Unit System(s) or component(s) in use, an independent, qualified, installation inspector or an independent, qualified, registered professional engineer, either of whom is trained and experienced in the proper installation of similar systems or components, must inspect the system for the presence of any of the following items:

**III.10.M.3.a.i** Weld breaks;

**III.10.M.3.a.ii** Punctures;

**III.10.M.3.a.iii** Scrapes of protective coatings;

**III.10.M.3.a.iv** Cracks;

**III.10.M.3.a.v** Corrosion;

**III.10.M.3.a.vi** Other structural damage or inadequate construction/installation;

**III.10.M.3.a.vii** All discrepancies must be remedied before the EMF Miscellaneous Unit Systems are covered, enclosed, or placed in use [WAC 173-303-640(3)(c) in accordance with WAC 173-303-680(2) and (3)].

**III.10.M.3.b** For EMF Miscellaneous Unit Systems or components that are placed underground and that are back-filled, the Permittees must provide a backfill material that is a non-corrosive porous, homogeneous substance. The backfill must be installed so that it is placed completely around the miscellaneous unit and compacted to ensure that the miscellaneous unit and piping are fully and uniformly supported [WAC 173-303 640(3)(d), in accordance with WAC 173-303-680(2) and (3)].

**III.10.M.3.c** The Permittees must test for tightness all new EMF miscellaneous units and equipment, prior to being covered, enclosed, or placed into use. If the EMF Miscellaneous Unit Systems are found not to be tight, all repairs necessary to remedy the leak(s) in the system must be performed prior to the EMF Miscellaneous Units Systems being covered,

enclosed, or placed in use [WAC 173-303-640(3)(e), in accordance with WAC 173-303-680(2) and (3)].

**III.10.M.3.d** The Permittees must ensure EMF Miscellaneous Unit Systems equipment is supported and protected against physical damage and excessive stress due to settlement, vibration, expansion, or contraction [WAC 173-303-640(3)(f), in accordance with WAC 173-303-680(2) and (3)].

**III.10.M.3.e** The Permittees must provide the type and degree of corrosion protection recommended by an independent corrosion expert, based on the information provided in Operating Unit Group 10, Appendices 13.9 and 13.11 as approved pursuant to Permit Conditions III.10.M.9.b.i., III.10.M.9.b.iv., III.10.M.9.b.v., III.10.M.9.c.i., III.10.M.9.c.iv., III.10.M.9.c.v., and III.10.M.9.d.i., III.10.M.9.d.iv. III.10.M.9.d.v., or other corrosion protection if Ecology believes other corrosion protection is necessary to ensure the integrity of the EMF Miscellaneous Unit Systems during use of the EMF Miscellaneous Unit Systems. The installation of a corrosion protection system that is field fabricated must be supervised by an independent corrosion expert to ensure proper installation [WAC 173-303-640(3)(g), in accordance with WAC 173-303-680(2) and (3)].

**III.10.M.3.f** Prior to initial receipt of dangerous and/or mixed waste in the WTP Unit, the Permittees will obtain, and keep on file in the WTP Unit operating record, written statements by those persons required to certify the design of the EMF Miscellaneous Unit Systems and supervise the installation of the EMF Miscellaneous Unit Systems, as specified in WAC 173-303-640(3)(b), (c), (d), (e), (f), and (g), in accordance with WAC 173-303-680, attesting that each EMF Miscellaneous Unit System and corresponding containment system listed in Permit Table III.10.M.A, as approved/modified pursuant to Permit Condition III.10.M.9., were properly designed and installed, and that repairs, in accordance with WAC 173-303-640(3)(c) and (e), were performed [WAC 173-303-640(3)(a), WAC 173-303-640(3)(h), in accordance with WAC 173-303-680(3)].

**III.10.M.3.g** The independent EMF Miscellaneous Unit System installation inspection and subsequent written statements will be certified in accordance with WAC 173-303-810(13)(a) as modified pursuant to Permit Condition III.10.M.1.d., comply with all requirements of WAC 173-303-640(3)(h), in accordance with WAC 173-303-680, and will consider, but not be limited to, the following miscellaneous unit system installation documentation:

**III.10.M.3.g.i** Field installation report with date of installation;

**III.10.M.3.g.ii** Approved welding procedures;

**III.10.M.3.g.iii** Welder qualifications and certification;

**III.10.M.3.g.iv** Hydro-test reports, as applicable, in accordance with the American Society of Mechanical Engineers Boiler and Pressure Vessel Code, Section VIII, Division 1, American Petroleum Institute (API) Standard 620, or Standard 650 as applicable;

**III.10.M.3.g.v** Tester credentials;

**III.10.M.3.g.vi** Field inspector credentials;

**III.10.M.3.g.vii** Field inspector reports;

**III.10.M.3.g.viii** Field waiver reports; and

**III.10.M.3.g.ix** Non-compliance reports and corrective action (including field waiver reports) and repair reports.

**III.10.M.4 Integrity Assessments [WAC 173-303-340 and WAC 173-303-640, in accordance with WAC173-303-680(2) and (3)].**

**III.10.M.4.a** The Permittees will ensure periodic integrity assessments are conducted on the EMF Miscellaneous Unit Systems listed in Permit Table III.10.M.A, as approved/modified pursuant to Permit Condition III.10.M.9., over the term of this Permit in accordance with WAC 173-303-680(2) and (3) as specified in WAC 173-303-640(3)(b), following the description of the integrity assessment program and schedule in Operating Unit Group 10, Chapter 6 of this Permit, as approved pursuant to Permit Conditions III.10.M.9.e.i. and III.10.M.4.c. Results of the integrity assessments will be included in the WTP Unit operating record until ten (10) years after post-closure, or corrective action is complete and certified, whichever is later.

**III.10.M.4.b** The Permittees will address problems detected during EMF Miscellaneous Unit Systems integrity assessments specified in Permit Condition III.10.M.4.a. following the integrity assessment program in Operating Unit Group 10, Chapter 6 of this Permit, as approved pursuant to Permit Conditions III.10.M.9.e.i. and III.10.M.4.c.

**III.10.M.4.c** The Permittees must immediately and safely remove from service any EMF Miscellaneous Unit System or secondary containment system which through an integrity assessment is found to be "unfit for use" as defined in WAC 173-303-040, following Permit Condition III.10.M.5.i.i. through iv., and vi. The affected EMF Miscellaneous Unit or secondary containment system must be either repaired or closed in accordance with Permit Condition III.10.M.5.i.v. [WAC 173-303-640(7)(e) and (f) and WAC 173-303-640(8), in accordance with WAC 173-303-680(3)].

**III.10.M.5 Miscellaneous Unit Management Practices**

**III.10.M.5.a** No dangerous and/or mixed waste will be managed in the EMF Miscellaneous Unit Systems unless the operating conditions, specified under Permit Condition III.10.M.5, are complied with.

**III.10.M.5.b** The Permittees will install and test all process and leak detection system monitoring/instrumentation, as specified in Permit Table III.10.M.A, as approved/modified pursuant to Permit Condition III.10.M.9, in accordance with Operating Unit Group 10, Appendices 13.1, 13.2, and 13.14 of this Permit, as approved pursuant to Permit Condition III.10.M.9.d.x.

**III.10.M.5.c** The Permittees will not place dangerous and/or mixed waste, treatment reagents, or other materials in the EMF Miscellaneous Unit Systems if these substances could cause the systems to rupture, leak, corrode, or otherwise fail [WAC 173-303-640(5)(a), in accordance with WAC 173-303-680(2)].

**III.10.M.5.d** The Permittees will operate the EMF Miscellaneous Unit Systems to prevent spills and overflows using the description of controls and practices, as required under WAC 173-303-640(5)(b), described in Permit Condition III.10.M.5, and Operating Unit Group 10, Appendix 13.13 of this Permit, as approved pursuant to Permit Condition III.10.M.9.e.iv. [WAC 173-303-640(5)(b), in accordance with WAC 173-303-680(2) and (3) and WAC 173-303-806 (4)(c)(ix)].

**III.10.M.5.e** For routinely non-accessible EMF Miscellaneous Unit Systems, as specified in Operating Unit Group 10, Chapter 4 of this Permit, as updated pursuant to Permit Condition III.10.M.9.e.vi., the Permittees will mark all routinely non-accessible EMF Miscellaneous Unit System access points with labels or signs to identify the waste contained in the units. The label, or sign, must be legible at a distance of at least fifty (50) feet and must bear a

legend which identifies the waste in a manner which adequately warns employees, emergency response personnel, and the public of the major risk(s) associated with the waste being stored or treated in the miscellaneous unit system(s). For the purposes of this Permit condition, "routinely non-accessible" means personnel are unable to enter these areas while waste is being managed in them [WAC 173-303-640(5)(d), in accordance with WAC 173-303-680(2)].

**III.10.M.5.f** For all EMF Miscellaneous Unit Systems not addressed in Permit Condition III.10.M.5.e, the Permittees will mark all these miscellaneous unit systems holding dangerous and/or mixed waste with labels or signs to identify the waste contained in the unit. The labels, or sign, must be legible at a distance of at least fifty (50) feet, and must bear a legend which identifies the waste in a manner which adequately warns employees, emergency response personnel, and the public of the major risk(s) associated with the waste being stored or treated in the miscellaneous unit system(s) [WAC 173-303-640(5)(d), in accordance with WAC 173-303-680(2)].

**III.10.M.5.g** The Permittees will ensure that the secondary containment systems for EMF Miscellaneous Unit Systems listed in Permit Table III.10.M.A, as approved/modified pursuant to Permit Condition III.10.M.9, are free of cracks or gaps to prevent any migration of dangerous and/or mixed waste or accumulated liquid out of the system to the soil, ground water, or surface water at any time waste is in the EMF Miscellaneous Units System. Any indication that a crack or gap may exist in the containment systems will be investigated and repaired in accordance with Operating Unit Group 10, Appendix 13.18 of this Permit, as approved pursuant to Permit Condition III.10.M.9.e.v. [WAC 173-303–640(4)(b)(i), WAC 173-303–640(4)(e)(i)(C), and WAC 173-303-640(6) in accordance with WAC 173-303-680(2) and (3), WAC 173-303-806(4)(i)(i)(B), and WAC 173-303-320].

**III.10.M.5.h** An impermeable coating, as specified in Operating Unit Group 10, Appendices 13.4, 13.5,13.7, 13.9, 13.11, and 13.12 of this Permit, as approved pursuant to Permit Condition III.10.M.9.b.v. of this Permit, will be maintained for all concrete containment systems and concrete portions of containment systems for each EMF Miscellaneous Unit System listed in Permit Table III.10.M.A, as approved/modified pursuant to Permit Condition III.10.M.9 [concrete containment systems that do not have a liner pursuant to WAC-173-303-640(4)(e)(i), in accordance with WAC 173-303-680(2), and have construction joints, will meet the requirements of WAC 173-303-640(4)(e)(ii)(C), in accordance with WAC 173-303-680(2)]. The coating will prevent migration of any dangerous and mixed waste into the concrete. All coatings will meet the following performance standards:

**III.10.M.5.h.i** The coating must seal the containment surface such that no cracks, seams, or other avenues through which liquid could migrate are present;

**III.10.M.5.h.ii** The coating must be of adequate thickness and strength to withstand the normal operation of equipment and personnel within the given area such that degradation or physical damage to the coating or lining can be identified and remedied before dangerous and mixed waste could migrate from the system; and

**III.10.M.5.h.iii** The coating must be compatible with the dangerous and mixed waste, treatment reagents, or other materials managed in the containment system [WAC 173-303-640(4)(e)(ii)(D), in accordance with WAC 173-303-680(2) and (3) and WAC 173-303-806(4)(i)(i)(A)].

**III.10.M.5.i** The Permittees will inspect all secondary containment systems for the EMF Miscellaneous Unit Systems listed in Permit Table III.10.M.A, as approved/modified pursuant to Permit Condition III.10.M.9., in accordance with the Inspection Plan specified in Operating Unit Group 10, Chapter 6/Chapter 6A of this Permit, as approved pursuant to Permit Conditions III.10.M.9.e.ii., and take the following actions if a leak or spill of dangerous and/or mixed waste is detected in these containment systems [WAC 173-303-640(5)(c) and WAC 173-303-640(6), in accordance with WAC 173-303-680(2) and (3), WAC 173-303-320, and WAC 173-303-806(4)(i)(i)(B)]:

**III.10.M.5.i.i** Immediately and safely stop the flow of dangerous and/or mixed waste into the miscellaneous unit system or secondary containment system;

**III.10.M.5.i.ii** Determine the source of the dangerous and/or mixed waste;

**III.10.M.5.i.iii** Remove the waste from the containment area in accordance with WAC 173-303-680(2) and (3), as specified in WAC 173-303-640(7)(b). The dangerous and/or mixed waste removed from containment areas of miscellaneous unit systems will be, as a minimum, managed as dangerous and/or mixed waste;

**III.10.M.5.i.iv** If the cause of the release was a spill that has not damaged the integrity of the miscellaneous unit system, the Permittees may return the miscellaneous unit system to service in accordance with WAC 173-303-680(2) and (3), as specified in WAC 173-303-640(7)(e)(ii). In such a case, the Permittees will take action to ensure the incident that caused liquid to enter the containment system will not reoccur [WAC 173-303-320(3)];

**III.10.M.5.i.v** If the source of the dangerous and/or mixed waste is determined to be a leak from the primary EMF Miscellaneous Unit System into the secondary containment system, or the system is unfit for use as determined through an integrity assessment or other inspection, the Permittees must comply with the requirements of WAC 173-303-640(7), and take the following actions:

A Close the EMF Miscellaneous Unit System following procedures in WAC 173-303-640(7)(e)(i) and in accordance with WAC 173-303-680, and Operating Unit Group 10, Chapter 11 of this Permit, as approved pursuant to Permit Condition III.10.C.8; or

B Repair and re-certify (in accordance with WAC 173-303-810(13)(a), as modified pursuant to Permit Condition III.10.M.1.d.) the EMF Miscellaneous Unit System in accordance with Operating Unit Group 10, Appendix 13.11 of this Permit, as approved pursuant to Permit Condition III.10.M.9.e.v. before the EMF Miscellaneous Unit System is placed back into service [WAC 173-303-640(7)(e)(iii) and WAC 173-303-640(7)(f), in accordance with WAC 173-303-680].

**III.10.M.5.i.vi** The Permittees will document, in the operating record, actions/procedures taken to comply with III.10.M.5.i. through v. above, as specified in WAC 173-303-640(6)(d) and in accordance with WAC 173-303-680(2) and (3).

**III.10.M.5.i.vii** In accordance with WAC 173-303-680(2) and (3), the Permittees will notify and report releases to the environment to Ecology as specified in WAC 173-303-640(7)(d).

**III.10.M.5.j** If liquids (e.g., Dangerous and/or mixed waste leaks and spills, precipitation, fire water, liquids from damaged or broken pipes) cannot be removed from the secondary containment system within twenty-four (24) hours, Ecology will be verbally notified

within twenty-four (24) hours of discovery. The notification will provide the information in A., B., and C. listed below. The Permittees will provide Ecology with a written demonstration, within seven (7) business days, identifying at a minimum [WAC 173-303-640(4)(c)(iv) and WAC 173-303-640(7)(b)(ii), in accordance with WAC 173-303-680(3) and WAC 173-303-806(4)(i)(i)(B)]:

A. Reasons for delayed removal.

B. Measures implemented to ensure continued protection of human health and the environment.

C. Current actions being taken to remove liquids from secondary containment.

**III.10.M.5.k** The Permittees will operate the EMF Miscellaneous Unit Systems in accordance with Operating Unit Group 10, Chapter 4 as updated pursuant to Permit Condition III.10.M.9.e.vi. and Appendix 13.18 of this Permit, as approved pursuant to Permit Condition III.10.M.9.e., and the following:

**III.10.M.5.k.i** The Permittees will operate the EMF Miscellaneous Unit Systems in order to maintain the systems and process parameters listed in Permit Table III.10.M.A. as approved/modified pursuant to Permit Condition III.10.M.9., within the operating trips and operating ranges specified in Permit Table III.10.M.A., and consistent with assumptions and basis which are reflected in Operating Unit Group 10, Appendix 6.3, as approved pursuant to Permit Condition III.10.M.9.b. [WAC 173-303-815(2)(b)(ii) and WAC 173-303-680(2) and (3)]. For the purposes of this Permit Condition, Operating Unit Group 10, Appendix 6.3. will be superseded by Appendix 6.4. upon its approval pursuant to either Permit Conditions III.10.M.9.c. or III.10.M.9.d.

**III.10.M.5.k.ii** The Permittees will calibrate/function test the instruments listed in Permit Table III.10.M.A., in accordance with Operating Unit Group 10, Appendix 13.18, as approved pursuant to Permit Condition III.10.M.9.e.xii.

**III.10.M.5.l** For any portion of the EMF Miscellaneous Unit Systems which have the potential for formation and accumulation of hydrogen gases, the Permittees will operate the portion to maintain hydrogen levels below the lower explosive limit [WAC 173-303-815(2)(b)(ii)].

**III.10.M.5.m** For each miscellaneous unit holding dangerous waste which are acutely or chronically toxic by inhalation, the Permittees will operate the system to prevent escape of vapors, fumes, or other emissions into the air [WAC 173-303-806(4)(i)(i)(B) and WAC 173-303-640(5)(e), in accordance with WAC 173-303-680].

### III.10.M.6 Inspections [WAC 173-303-680(3)]

**III.10.M.6.a** The Permittees will inspect the EMF Miscellaneous Unit Systems in accordance with the Inspection Plan in Operating Unit Group 10, Chapter 6/Chapter 6A of this Permit, as modified in accordance with Permit Condition III.10.C.5.c.

**III.10.M.6.b** The inspection data for EMF Miscellaneous Unit Systems will be recorded, and the records will be placed in the WTP Unit operating record for the EMF Miscellaneous Unit Systems, in accordance with Permit Condition III.10.C.4.

### III.10.M.7 Recordkeeping

The Permittees will record and maintain in the WTP Unit operating record for the EMF Miscellaneous Unit Systems, all monitoring, calibration, maintenance, test data, and inspection data compiled under the conditions of this Permit, in accordance with Permit Conditions III.10.C.4 and III.10.C.5.

### III.10.M.8 Closure

The Permittees will close the EMF Miscellaneous Unit Systems in accordance with Operating Unit Group 10, Chapter 11, as approved pursuant to Permit Condition III.10.C.8.

### III.10.M.9 Compliance Schedule

**III.10.M.9.a** All information identified for submittal to Ecology in a. through e. of this compliance schedule must be signed and certified in accordance with requirements in WAC 173-303-810(12), as modified in accordance with Permit Condition III.10.M.1.d. [WAC 173-303-806(4)].

**III.10.M.9.b** The Permittees will submit to Ecology, pursuant to Permit Condition III.10.C.9.f., prior to construction of each secondary containment and leak detection system for the EMF Miscellaneous Unit Systems (per level) as identified in Permit Tables III.10.M.A, engineering information as specified below, for incorporation into Operating Unit Group 10, Appendices 13.2, 13.4, 13.5, 13.7, 13.8, 13.9, 13.11, and 13.12 of this Permit. At a minimum, engineering information specified below will show the following as described in WAC 173-303-640, in accordance with WAC 173-303-680 (the information specified below will include dimensioned engineering drawings and information on sumps and floor drains):

**III.10.M.9.b.i** IQRPE Reports (specific to foundation, secondary containment, and leak detection system) will include review of design drawings, calculations, and other information on which the certification report is based and will include as applicable, but not limited to, review of such information described below. Information (drawings, specifications, etc.) already included in Operating Unit Group 10, Appendix 13.0 of this Permit may be included in the report by reference and should include drawing and document numbers. IQRPE Reports will be consistent with the information separately provided in III.10.M.9.b ii. through ix. below [WAC 173-303-640(3)(a), in accordance with WAC 173-303-680 and WAC 173-303-806(4)(i)(i )];

**III.10.M.9.b.ii** Design drawings (General Arrangement Drawings, in plan) and specifications for the foundation, secondary containment, including, liner installation details, and leak detection methodology [Note: leak detection systems for areas where daily, direct, or remote visual inspection is not feasible, will be continuous in accordance with WAC 173-303-640(4)(e)(iii)(C)]. These items should show the dimensions, volume calculations, and location of the secondary containment system, and should include items such as floor/pipe slopes to sumps, tanks, floor drains [WAC 173-303-640(4)(b) through (f) and WAC 173-303-640(3)(a), in accordance with WAC 173-303-680 and WAC 173-303-806(4)(i)(i)];

**III.10.M.9.b.iii** The Permittees will provide the design criteria (references to codes and standards, load definitions, and load combinations, materials of construction, and analysis/design methodology) and typical design details for the support of the secondary containment system. This information will demonstrate the foundation will be capable of providing support to the secondary containment system, resistance to pressure gradients above and below the system, and capable of preventing failure due to settlement, compression, or uplift [WAC 173-303-640(4)(c)(ii), in accordance with WAC 173-303-680(2) and WAC 173-303-806(4)(i)(i)(B)];

**III.10.M.9.b.iv** A description of materials and equipment used to provide corrosion protection for external metal components in contact with soil, including factors affecting the

potential for corrosion [WAC 173-303-640(3)(a)(iii)(B), in accordance with WAC 173-303-680 and WAC 173-303-806(4)(i)(i)(A) through (B)];

**III.10.M.9.b.v** Secondary containment/foundation and leak detection systems materials selection documentation (including, but not limited to, concrete coatings and water stops, and liner materials), as applicable [WAC 173-303-806(4)(i)(i)(A) through (B)];

**III.10.M.9.b.vi** Detailed description of how the secondary containment for each miscellaneous unit system will be installed in compliance with WAC 173-303-640(3)(c), in accordance with WAC 173-303-680 and WAC 173-303-806(4)(i)(i)(A) through (B);

**III.10.M.9.b.vii** Submit Permit Table III.10.E.S. completed to provide for all secondary containment sumps and floor drains, the information as specified in each column heading, consistent with information to be provided in III.10.M.9.b i. through vi. above;

**III.10.M.9.b.viii** Documentation that secondary containment and leak detection systems will not accumulate hydrogen gas levels above the lower explosive limit for incorporation into the Administrative Record [WAC 173-303-680, WAC 173-303-806(4)(i)(i)(A), and WAC 173-303-806(4)(i)(v)];

**III.10.M.9.b.ix** A detailed description of how miscellaneous unit design provides access for conducting future miscellaneous unit integrity assessments [WAC 173-303-640(3)(b) and WAC 173-303-806(4)(i)(i)(B)].

**III.10.M.9.c** The Permittees will submit to Ecology, pursuant to Permit Condition III.10.M.9., prior to installation of each EMF Miscellaneous Unit System as identified in Permit Table III.10.M.A, engineering information as specified below, for incorporation into Operating Unit Group 10, Appendix 13.1 through 13.18 of this Permit. At a minimum, engineering information specified below will show the following as required pursuant to WAC 173-303-640 and in accordance with WAC 173-303-680 (the information specified below will include dimensioned engineering drawings):

**III.10.M.9.c.i** IQRPE Reports (specific to miscellaneous unit) will include review of design drawings, calculations, and other information on which the certification report is based and will include as applicable, but not limited to, review of such information described below. Information (drawings, specifications, etc.) already included in Operating Unit Group 10, Appendix 8.0 of this Permit may be included in the report by reference and should include drawing and document numbers. The IQRPE Reports will be consistent with the information separately provided in III.10.M.9.c.ii. through xi. below and the IQRPE Report specified in Permit Condition III.10.M.9.b.i. [WAC 173-303-640(3)(a), in accordance with WAC 173-303-680(2) and WAC 173-303-806(4)(i)(i)];

**III.10.M.9.c.ii** Design drawings (General Arrangement Drawings in plan, Process Flow Diagrams, Piping and Instrumentation Diagrams [including pressure control systems], and Mechanical Drawings) and specifications, and other information specific to miscellaneous units (to show location and physical attributes of each miscellaneous unit), [WAC 173-303-640(3)(a), in accordance with WAC 173-303-680(2) and WAC 173-303-806(4)(i)(i)];

**III.10.M.9.c.iii** Miscellaneous unit design criteria (references to codes and standards, load definitions, and load combinations, materials of construction, and analysis/design methodology) and typical design details for the support of the miscellaneous unit(s). Structural support calculations specific to off-specification, non-standard, and field fabricated miscellaneous units will be submitted for incorporation into the

Administrative Record [WAC 173-303-640(3)(a), in accordance with WAC 173-303-680(2) and WAC 173-303-806(4)(i)(i)(B)];

**III.10.M.9.c.iv** A description of materials and equipment used to provide corrosion protection for external metal components in contact with water, including factors affecting the potential for corrosion [WAC 173-303-640(3)(a)(iii)(B), in accordance with WAC 173-303-680(2) and WAC 173-303-806(4)(i)(i)(A) through (B)];

**III.10.M.9.c.v** Miscellaneous unit materials selection documentation (e.g., physical and chemical tolerances) [WAC 173-303-640(3)(a), in accordance with WAC 173-303-680(2) and WAC 173-303-806(4)(i)(i)(A)];

**III.10.M.9.c.vi** Miscellaneous unit vendor information (including, but not limited to, required performance warranties, as available), consistent with information submitted under ii. above, will be submitted for incorporation into the Administrative Record [WAC 173-303-640(3)(a), in accordance with WAC 173-303-680(2), WAC 173-303-806(4)(i)(i)(A) through (B), and WAC 173-303-806(4)(i)(v)];

**III.10.M.9.c.vii** System Description related to miscellaneous units will be submitted for incorporation into the Administrative Record [WAC 173-303-680, WAC 173-303 806(4)(i)(i)(A) through (B), and WAC 173-303-806(4)(i)(v)].

**III.10.M.9.c.viii** Mass and energy balance for normal projected operating conditions used in developing the Piping and Instrumentation Diagrams and the Process Flow Diagrams, including assumptions and formulas used to complete the mass and energy balance, so that they can be independently verified for incorporation into the Administrative Record [WAC 173-303-680(2), WAC 173-303-806(4)(i)(i)(B), and WAC 173-303-806(4)(i)(v)];

**III.10.M.9.c.ix** A detailed description of how the miscellaneous unit will be installed in compliance with WAC 173-303-640(3)(c), (d), and (e), in accordance with WAC 173-303-680 and WAC 173-303-806(4)(i)(i)(B);

**III.10.M.9.c.x** Documentation that miscellaneous units are designed to prevent the accumulation of hydrogen gas levels above the lower explosive limit for incorporation into the Administrative Record [WAC 173-303-680, WAC 173-303-806(4)(i)(i)(A), and WAC 173-303-806(4)(i)(v)];

**III.10.M.9.c.xi** Documentation that miscellaneous units are designed to prevent escape of vapors and emissions of acutely or chronically toxic (upon inhalation) EHW, for incorporation into the Administrative Record [WAC 173-303-640(5)(e), in accordance with WAC 173-303-680(2) and WAC 173-303-806(4)(i)(i)(B)];

**III.10.M.9.d** The Permittees will submit to Ecology, pursuant to Permit Condition III.10.C.9.f, prior to installation of equipment as identified in Permit Table III.10.M.A, not addressed in Permit Condition III.10.M.9.c., engineering information as specified below for incorporation into Operating Unit Group 10, Appendices 13.1 through 13.14 of this Permit. At a minimum, engineering information specified below will show the following as required pursuant to WAC 173-303-640, in accordance with WAC 173-303-680 (the information specified below will include dimensioned engineering drawings):

**III.10.M.9.d.i** IQRPE Reports (specific to equipment) will include a review of design drawings, calculations, and other information as applicable, on which the certification report is based. The reports will include, but not be limited to, review of such information described below. Information (drawings, specifications, etc.) already included in Operating Unit Group 10, Appendix 13.0 of this Permit may be included in the report

by reference and should include drawing and document numbers. The IQRPE Reports will be consistent with the information provided separately in ii. through xiii. below and the IQRPE Reports specified in Permit Conditions III.10.M.9.b. and III.10.M.9.c. [WAC 173-303-640(3)(a), in accordance with WAC 173-303-680(2) and WAC 173-303-806(4)(i)(i)(A) through (B)];

**III.10.M.9.d.ii** Design drawings (Process Flow Diagrams, Piping and Instrumentation Diagrams [including pressure control systems]) specifications and other information specific to equipment (these drawings should include all equipment such as pipe, valves, fittings, pumps, instruments, etc.) [WAC 173-303-640(3)(a), in accordance with WAC 173-303-680(2) and WAC 173-303-806(4)(i)(i)(A) through (B)];

**III.10.M.9.d.iii** The Permittees will provide the design criteria (references to codes and standards, load definitions, and load combinations, materials of construction, and analysis/design methodology) and typical design details for the support of the equipment [WAC 173-303-640(3)(a) and WAC 173-303-640(3)(f), in accordance with WAC 173-303-680 and WAC 173-303-806(4)(i)(i)(B)];

**III.10.M.9.d.iv** A description of materials and equipment used to provide corrosion protection for external metal components in contact with soil and water, including factors affecting the potential for corrosion [WAC 173-303-640(3)(a)(iii)(B), in accordance with WAC 173-303-680(2) and WAC 173-303-806(4)(i)(i)(A)];

**III.10.M.9.d.v** Materials selection documentation for equipment (e.g., physical and chemical tolerances) [WAC 173-303-640(3)(a), in accordance with WAC 173-303-680(2) and WAC 173-303-806(4)(i)(i)(A)];

**III.10.M.9.d.vi** Vendor information (including, but not limited to, required performance warranties, as available), consistent with information submitted under ii. above, for equipment will be submitted for incorporation into the Administrative Record [WAC 173-303-640(3)(a), in accordance with WAC 173-303-680(2), WAC 173-303-806(4)(i)(i)(A) through (B), and WAC 173-303-806(4)(i)(iv)];

**III.10.M.9.d.vii** Miscellaneous unit, equipment, and leak detection system instrument control logic narrative description (e.g., descriptions of fail-safe conditions, etc.) [WAC 173-303-680(2), WAC 173-303-806(4)(i)(i)(B), and WAC 173-303-806(4)(i)(v)].

**III.10.M.9.d.viii** System Descriptions related to equipment and system descriptions related to leak detection systems, for incorporation into the Administrative Record [WAC 173-303-680, WAC 173-303-806(4)(i)(i)(A) through (B), and WAC 173-303-806(4)(i)(v)];

**III.10.M.9.d.ix** A detailed description of how the equipment will be installed and tested [WAC 173-303-640(3)(c) through (e) and WAC 173-303-640(4)(b) and (c), in accordance with WAC 173-303-680 and WAC 173-303-806(4)(i)(i)(B)];

**III.10.M.9.d.x** For process monitoring, control, and leak detection system instrumentation for the WTP Unit Miscellaneous Unit Systems as identified in Permit Table III.10.M.A, a detailed description of how the process monitoring, control, and leak detection system instrumentation will be installed and tested [WAC 173-303-640(3)(c) through (e), WAC 173-303-640(4)(b) and (c), WAC 173-303-806(4)(c)(vi), and WAC 173-303-806(4)(i)(i)(B)];

**III.10.M.9.d.xi** Mass and energy balance for projected normal operating conditions, used in developing the Piping and Instrumentation Diagrams and Process Flow Diagrams, including assumptions and formulas used to complete the mass and energy balance, so that they can be independently verified, for incorporation into the Administrative

Record [WAC 173-303-680(2), WAC 173-303-806(4)(i)(i)(B), and WAC 173-303-806(4)(i)(v)];

**III.10.M.9.d.xii** Documentation that miscellaneous units are designed to prevent the accumulation of hydrogen gas levels above the lower explosive limit for incorporation into the Administrative Record [WAC 173-303-680, WAC 173-303-806(4)(i)(i)(A), and WAC 173-303-806(4)(i)(v)].

**III.10.M.9.d.xiii** Leak detection system documentation (e.g. vendor information, etc.) consistent with information submitted under Permit Condition III.10.M.9.c.ii. and Permit Conditions III.10.M.9.d.ii., vii., viii., and x. above, will be submitted for incorporation into the Administrative Record.

**III.10.M.9.e** Prior to initial receipt of dangerous and/or mixed waste in the WTP Unit, the Permittees will submit to Ecology, pursuant to Permit Condition III.10.C.9.f., the following as specified below for incorporation into Operating Unit Group 10, Appendix 13.18, except Permit Condition III.10.M.9.e.i., which will be incorporated into Operating Unit Group 10, Chapter 6, of this Permit. All information provided under this permit condition must be consistent with information provided pursuant to Permit Conditions III.10.M.9.b., c., d., and e., III.10.M.3.e., and III.10.C.11.b., as approved by Ecology.

**III.10.M.9.e.i** Integrity assessment program and schedule for the EMF Miscellaneous Unit Systems will address the conducting of periodic integrity assessments on the EMF Miscellaneous Unit Systems over the life of the systems, as specified in Permit Condition III.10.M.9.b.ix. and WAC 173-303-640(3)(b), in accordance with WAC 173-303-680, and descriptions of procedures for addressing problems detected during integrity assessments. The schedule must be based on past integrity assessments, age of the system, materials of construction, characteristics of the waste, and any other relevant factors [WAC 173-303-640(3)(b), in accordance with WAC 173-303-680 and WAC 173-303-806(4)(i)(i)(B)];

**III.10.M.9.e.ii** Detailed plans and descriptions, demonstrating the leak detection system is operated so that it will detect the failure of either the primary or secondary containment structure or the presence of any release of dangerous and/or mixed waste or accumulated liquid in the secondary containment system within twenty-four (24) hours WAC 173-303-640(4)(c)(iii). Detection of a leak of at least 0.1 gallons per hour within twenty-four (24) hours is defined as being able to detect a leak within twenty-four (24) hours. Any exceptions to this criteria must be approved by Ecology in accordance with WAC 173-303-680, WAC 173-303-640(4)(c)(iii), and WAC 173-303-806(4)(i)(i)(B)];

**III.10.M.9.e.iii** Detailed operational plans and descriptions, demonstrating that spilled or leaked waste and accumulated liquids can be removed from the secondary containment system within twenty-four (24) hours [WAC 173-303-806(4)(i)(i)(B)];

**III.10.M.9.e.iv** Descriptions of operational procedures demonstrating appropriate controls and practices are in place to prevent spills and overflows from the EMF Miscellaneous Unit Systems, or containment systems, in compliance with WAC 173-303-640(5)(b)(i) through in accordance with WAC 173-303-680 [WAC 173-303-806(4)(i)(i)(B)];

**III.10.M.9.e.v** Description of procedures for investigation and repair of the EMF Miscellaneous Unit Systems [WAC 173-303–640(6) and WAC 173-303-640(7)(e) and (f), in

accordance with WAC 173-303-680, WAC 173-303-320, WAC 173-303-806(4)(a)(v), and WAC 173-303-806(4)(i)(i)(B)];

**III.10.M.9.e.vi** Updated Chapter 4, Narrative Descriptions, Tables and Figures as identified in Permit Table III.10.M.A., as modified pursuant to Permit Condition III.10.M.9.e.ix., and updated to identify routinely non-accessible EMF Miscellaneous Unit Systems [WAC 173-303-680 and WAC 173-303-806(4)(i)(i)(A) through (B)];

**III.10.M.9.e.vii** Descriptions of procedures for management of ignitable and reactive, and incompatible dangerous and/or mixed waste, in accordance with WAC 173-303-640(9) and (10), in accordance with WAC 173-303-680 and WAC 173-303-806(4)(i)(i)(B).

**III.10.M.9.e.viii** A description of the tracking system used to track dangerous and/or mixed waste generated throughout the EMF Miscellaneous Unit Systems, pursuant to WAC 173-303-380.

**III.10.M.9.e.ix** Permit Table III.10.M.A, amended as follows [WAC 173-303-680 and WAC 173-303-806(4)(i)(i)(A) through (B)]:

A. Under column 1, update and complete list of dangerous and mixed waste EMF Miscellaneous Unit Systems, including plant items which comprise each system (listed by item number).

B. Under column 2, update and complete system designations.

C. Under column 3, replace the ‘Reserved’ with the Operating Unit Group 10, Appendix 13.0 subsections specific to miscellaneous unit systems as listed in column 1.

D. Under column 4, update and complete list of narrative description tables and figures.

E. Under column 5, update and complete maximum operating volume for each miscellaneous unit, as applicable.

F. Permit Table III.10.M.A., amended as follows:

1. Under column 1, update and complete list of plant items that comprise the EMF Vessel Vent System (listed by item number).
2. Under column 2, update and complete designations.
3. Under column 3, replace the ‘Reserved’ with the Operating Unit Group 10, Appendix 13.0, subsections (e.g., 13.1, 13.2, etc.) specific to systems as listed in column 1.
4. Under column 4, update and complete list of narrative description tables and figures.

**III.10.M.9.e.x** Permit Table III.10.M.A. will be completed for EMF Miscellaneous Unit System process and leak detection system monitors and instruments (to include, but not be limited to: instruments and monitors measuring and/or controlling flow, pressure, temperature, density, pH, level, humidity, and emissions) to provide the information as specified in each column heading. Process and leak detection system monitors and instruments for critical systems as specified in Operating Unit Group 10, Appendix 2.0 and as updated pursuant to Permit Condition III.10.C.9.b.and for operating parameters as required to comply with Permit Condition III.10.C.3.e.iii. will be addressed. Process monitors and instruments for non-waste management operations (e.g., utilities, raw chemical storage, non-contact cooling waters, etc.) are excluded

from this permit condition [WAC 173-303-680, WAC 173-303-806(4)(i)(i)(A) through (B), and WAC 173-303-806(4)(i)(v)];

**III.10.M.9.e.xi** Supporting documentation for operating trips and expected operating range as specified in Permit Table III.10.M.A., as approved pursuant to Permit Condition III.10.M.9.e.x. [WAC 173-303-680, WAC 173-303-806(4)(i)(i)(B), WAC 173-303-806(4)(i)(iv), and WAC 173-303-806(4)(i)(v)];

**III.10.M.9.e.xii** Documentation of process and leak detection instruments and monitors (as listed in Permit Table III.10.M.A) for the EMF Miscellaneous Unit Systems to include, but not be limited to, the following [WAC 173-303-680, WAC 173-303-806(4)(i)(i)(B), and WAC 173-303-806(4)(i)(v)]:

A. Procurement Specifications.

B. Location used.

C. Range, precision, and accuracy.

D. Detailed descriptions of calibration/functionality test procedures (e.g., method number [ASTM]) or provide a copy of manufacturer's recommended calibration procedures.

E. Calibration/functionality test, inspection, and routine maintenance schedules and checklists, including justification for calibration, inspection and maintenance frequencies, criteria for identifying instruments found to be significantly out of calibration, and corrective action to be taken for instruments found to be significantly out of calibration (e.g., increasing frequency of calibration, instrument replacement, etc.).

F. Equipment instrument control logic narrative description (e.g., descriptions of fail-safe conditions, etc.) [WAC 173-303-680(2), WAC 173-303-806(4)(i)(i)(B), and WAC 173-303-806(4)(i)(v)].

**Table III.10.M.A - EMF Plant Miscellaneous Unit System Description**

| Miscellaneous Unit System Description/Location | Miscellaneous Unit System Designation | Description Drawings | Narrative Description, Tables & Figures | Maximum Capacity (gallons) |
|---|---|---|---|---|
| DEP-COND-00001 (Evaporator Primary Condenser)<br>E-0102 | DEP | Reserved | 4G.2.4; Table 4G-2 | NA |
| DEP-COND-00002 (Evaporator Inter-Condenser)<br>E-0102 | DEP | Reserved | 4G.3.3; Table 4G-2 | NA |
| DEP-COND-00003 (Evaporator After-Condenser)<br>E-0102 | DEP | Reserved | 4G.3.4; Table 4G-2 | NA |
| DEP-EVAP-00001 (Evaporator Separator Vessel)<br>E-0103 | DEP | Reserved | 4G.3.4; Table 4G-2 | NA |

| Miscellaneous Unit System Description/Location | Miscellaneous Unit System Designation | Description Drawings | Narrative Description, Tables & Figures | Maximum Capacity (gallons) |
|---|---|---|---|---|
| DEP-FILT-00002 (Process Condensate Filter)<br>E-0103 | DEP | Reserved | 4G.3.5; Table 4G-2 | NA |
| DEP-FILT-00003 (Evaporator Feed Pre-filter)<br>E-0103 | DEP | Reserved | 4G.3.6; Table 4G-2 | NA |
| DEP-FILT-00004A (Condensate Duplex Cartridge Filter)<br>E-0102 | DEP | Reserved | 4G.3.7; Table 4G-2 | NA |
| DEP-FILT-00004B (Condensate Duplex Cartridge Filter)<br>E-0102 | DEP | Reserved | 4G.3.7; Table 4G-2 | NA |
| DVP-HTR-00001A (Process Ventilation Preheater)<br>E-0102 | DEP | Reserved | 4G; Table 4G-2 | NA |
| DVP-HTR-00001B (Process Ventilation Preheater)<br>E-0102 | DEP | Reserved | 4G; Table 4G-2 | NA |
| DVP-HEPA-00003A (Process Ventilation Primary HEPA Filter)<br>E-0102A | DEP | Reserved | 4G; Table 4G-2 | NA |
| DVP-HEPA-00003B (Process Ventilation Primary HEPA Filter)<br>E-0102A | DEP | Reserved | 4G; Table 4G-2 | NA |
| DVP-HEPA-00004A (Process Ventilation Secondary HEPA Filters)<br>E-0102A | DEP | Reserved | 4G; Table 4G-2 | NA |
| DVP-HEPA-00004B (Process Ventilation Secondary HEPA Filters)<br>E-0102A | DEP | Reserved | 4G; Table 4G-2 | NA |

| Miscellaneous Unit System Description/Location | Miscellaneous Unit System Designation | Description Drawings | Narrative Description, Tables & Figures | Maximum Capacity (gallons) |
|---|---|---|---|---|
| DEP-HX-00001 (Evaporator Concentrate/Feed Vessels LAW Effluent Cooler)<br>E-0103 | DEP | Reserved | 4G.3.8; Table 4G-2 | NA |
| DEP-RBLR-00001 (Evaporator Reboiler)<br>E-0103 | DEP | Reserved | 4G.3.9; Table 4G-2 | NA |
| DVP-EXHR-00001A (Process Ventilation Exhausters)<br>E-0102 | DEP | Reserved | 4G; Table 4G-2 | NA |
| DVP-EXHR-00001B (Process Ventilation Exhausters)<br>E-0102 | DEP | Reserved | 4G; Table 4G-2 | NA |

This page intentionally left blank.

WASHINGTON STATE DEPARTMENT OF ECOLOGY

# Dangerous Waste Permit Application Part A Form

| Date Received | Reviewed by: Mandy Jones | Date: 08 22 2017 |
|---|---|---|
| Month Day Year | Approved by: [illegible] | Date: 08 24 2017 |
| 11 21 2016 | | |

**I. This form is submitted to: (place an "X" in the appropriate box)**

| | | |
|---|---|---|
| ☒ | Request modification to a final status permit (commonly called a "Part B" permit) | |
| ☐ | Request a change under interim status | |
| ☐ | Apply for a final status permit. This includes the application for the initial final status permit for a site or for a permit renewal (i.e., a new permit to replace an expiring permit). | |
| ☐ | Establish interim status because of the wastes newly regulated on: | (Date) |
| | List waste codes: | |

**II. EPA/State ID Number**

W A 7 8 9 0 0 0 8 9 6 7

**III. Name of Facility**

US Department of Energy – Hanford Facility

**IV. Facility Location (Physical address not P.O. Box or Route Number)**

**A. Street**

Refer to Permit Attachment 2 – Hanford Facility Permit Legal Description

| City or Town | State | ZIP Code |
|---|---|---|
| Near Richland | WA | |

| County Code (if known) | County Name |
|---|---|
| 005 | Benton |

| B. Land Type | C. Geographic Location Latitude (degrees, mins, secs) | Longitude (degrees, mins, secs) | D. Facility Existence Date Month Day Year |
|---|---|---|---|
| F | Refer to TOPO Map (Section XV.) | | 11 19 1980 |

**V. Facility Mailing Address**

**Street or P.O. Box**

P.O. Box 450

| City or Town | State | ZIP Code |
|---|---|---|
| Richland | WA | 99352 |

| VI. Facility contact (Person to be contacted regarding waste activities at facility) | | |
|---|---|---|
| **Name (last)** | **(first)** | |
| Smith | Kevin | |
| **Job Title** | **Phone Number (area code and number)** | |
| Manager | (509) 372-2315 | |
| **Contact Address** | | |
| **Street or P.O. Box** | | |
| P.O. Box 450 | | |
| **City or Town** | **State** | **ZIP Code** |
| Richland | WA | 99352 |

| VII. Facility Operator Information | | |
|---|---|---|
| **A. Name** | **Phone Number (area code and number)** | |
| Department of Energy Owner/Operator<br>Bechtel National, Inc. Co-Operator for WTP* | (509) 372-2315<br>(509) 371-2220* | |
| **Street or P.O. Box** | | |
| P.O. Box 450<br>2435 Stevens Center Place * | | |
| **City or Town** | **State** | **ZIP Code** |
| Richland | WA | 99352<br>99354* |
| **B. Operator Type** | F | |
| **C. Does the name in VII.A reflect a proposed change in operator?** | ☐ Yes ☒ No | |
| **If yes, provide the scheduled date for the change:** | **Month** | **Day** / **Year** |
| **D. Is the name listed in VII.A. also the owner? If yes, skip to Section VIII.C.** | ☐ Yes ☒ No | |

Footnote From Section VII

* Asterisk indicates information for Bechtel National, Inc., the Co-Operator for WTP

| VIII. Facility Owner Information | | |
|---|---|---|
| **A. Name** | **Phone Number (area code and number)** | |
| U.S. Department of Energy Owner/Operator | (509) 372-2315 | |
| **Street or P.O. Box** | | |
| P.O. Box 450 | | |
| **City or Town** | **State** | **ZIP Code** |
| Richland | WA | 99352 |
| **B. Owner Type** | F | |
| **C. Does the name in VIII.A reflect a proposed change in owner?** | ☐ Yes ☒ No | |
| **If yes, provide the scheduled date for the change:** | **Month** | **Day** / **Year** |

| IX. NAICS Codes (5/6 digit codes) | | | | | | | | | | | | | |
|---|---|---|---|---|---|---|---|---|---|---|---|---|---|
| **A. First** | | | | | | | **B. Second** | | | | | | |
| 5 | 6 | 2 | 2 | 1 | 1 | Waste Treatment & Disposal | 9 | 2 | 4 | 1 | 1 | 0 | Administration of Air & Water Resource & Solid Waste Management Programs |

## X. Other Environmental Permits (see instructions)

| A. Permit Type | B. Permit Number | C. Description |
|---|---|---|
| E | NOC ID 625 | WAC 246-247, NOC Approval Rad Air (HLW) |
| E | NOC ID 626 | WAC 246-247, NOC Approval Rad Air (LAB) |
| E | NOC ID 627 | WAC 246-247, NOC Approval Rad Air (LAW) |
| E | NOC ID 628 | WAC 246-247, NOC Approval Rad Air (PTF) |
| E | NOC ID 947 | WAC 246-247, NOC Approval Rad Air (Unplanned) |
| E | EPA Approval | 40 CFR 61, NOC Approval Radioactive Air |
| E | DE01NWP-003 | WAC 173-400/-460, Non-Radioactive Air Approval |
| E | DE02NWP-002 | WAC 173-400/-460, Non-Radioactive Air Approval |
| E | DE07NWP-004 | WAC 173-400-/460, Non-Radioactive Air Approval |
| P | PSD-02-01 | WAC 173-400 Prevention of Significant Deterioration |
| E | AOP00-05-006 | WAC 173-401, Hanford Site Air Operating Permit |
| E | WAG-50-51-80 | WAC 173-220/-216, Sand and Gravel General Permit |
| E | WAG-50-51-81 | WAC 173-220/-216, Sand and Gravel General Permit |
| E | ST0004511 | WAC 173-216, State Waste Discharge Permit |
| E | HAN009 | WAC 246-272A, Large On-Site Sewage Systems |
| E | HAN013 | WAC 246-272B, Large On-Site Sewage Systems |
| E | TSCA2008311 | 40 CFR 761.61(c) TSCA approval Dated August 31, 2000. |

## XI. Nature of Business (provide a brief description that includes both dangerous waste and non-dangerous waste areas and activities)

Bechtel National Inc. (BNI) is in the process of constructing the Waste Treatment Immobilization Plant (WTP); the WTP is permitted as Operating Group 10 under the Dangerous Waste Permit (DWP) Number WA7890008967. Currently, six (6) major facilities are being designed and constructed; the Low-Activity Waste (LAW) Facility, the High-Level Waste (HLW) Facility, the Pretreatment (PT) Facility, the Laboratory (Lab) Facility, the Balance of Facilities (BOF), and the Effluent Management Facility (EMF). During dangerous waste management operations, the WTP will chemically separate, treat, and immobilize radioactive and dangerous (mixed) waste through vitrification.

During mixed waste treatment operations, WTP will utilize two separate configurations. The first configuration, known as the Direct Feed LAW configuration, will allow mixed waste to be transferred directly from the Low-Activity Waste Pretreatment System (LAWPS) to the LAW Facility, bypassing the PT Facility. The low-activity waste will then be treated in the LAW Facility using the vitrification process. Effluents generated during the process will be treated in the EMF. In the second configuration, known as the baseline configuration, tank waste will be sent directly from the Tank Farms to the PT Facility. The mixed waste will then be pretreated and sent to either the HLW Facility or the LAW Facility, depending on the waste characterization. In both configurations, waste will be characterized prior to receipt at the WTP. The waste will only be transferred to WTP if it meets WTP's waste acceptance criteria. While operating in the Direct Feed LAW configuration, WTP will not accept and/or treat mixed waste that carries the D001 (ignitable) waste code and/or the D003 (reactive) waste code. While operating in the baseline configuration, WTP may accept mixed waste that carries the D001 (ignitable) waste code and/or the D003 (reactive) waste code. Once waste has been received, process knowledge will be used to remove the D001 and D003 waste codes. Waste initially characterized as reactive and/or ignatible will only be stored in dangerous waste management units designed for these waste codes.

Process Codes S01, S02, S06, T01, T04, and X99 utilized in Sections XII and XIII are described below.

(S01)

At the WTP, a total of six (6) container storage areas are permitted to store the dangerous/mixed waste in containers. Three (3) of the areas will be located in the HLW Facility, one (1) area will be located in the Lab, and two (2) areas are considered part of the BOF. The LAW Facility and the EMF will not have permitted container storage areas. The dangerous or mixed waste generated at the EMF and the LAW Facility will be managed in 90-day accumulation areas and satellite accumulation areas pursuant to the generator requirements (WAC-173-303-200).

The 1,089,000 gallon Process Design Capacity for S01 listed in Section XII was calculated by multiplying the maximum surface area of all permitted container storage areas by the maximum waste container heights.

(S02)

A total of ninety-seven (97) tanks will be permitted to store dangerous/mixed waste. The PT Facility will have fifty-nine (59) tanks permitted to store dangerous/mixed waste; the LAW Facility will have twelve (12) tanks permitted to store dangerous/mixed waste; the HLW Facility will have fifteen (15) tanks permitted to dangerous/mixed waste, the EMF will have nine (9) tanks permitted to store dangerous/mixed waste, and the Lab will have two (2) tanks permitted to store treat dangerous/mixed waste.

The 5,717,000 gallon, which includes the EMF tank volume, Process Design Capacity for S02 in Section XII was calculated by summing up the total tank volumes. The total tank volumes are nominal and do not account for manufacturing tolerances, nozzles, and displacement of internals.

The nine (9) Direct Feed LAW Effluent Management Facility Process System (DEP) tanks/vessels that will be permitted for storage, and corresponding rooms are:

- DEP-VSL-00001-Low-point drain vessel (ED-8001)
- DEP-VSL-00002-Evaporator feed vessel (E-0105)
- DEP-VSL-00003A-Evaporator concentrate vessel (E-0105)
- DEP-VSL-00003B-Evaporator concentrate vessel (E-0105)
- DEP-VSL-00003C- Evaporator concentrate vessel (E-0105)
- DEP-VSL-00004A- Overhead sampling vessel (E-0106)
- DEP-VSL-00004B- Overhead sampling vessel (E-0106)
- DEP-VSL-00005A- Process condensate lag storage vessel (E-0106)
- DEP-VSL-00005B- Process condensate lag storage vessel (E-0106)

(S06)

A total of twenty-two (22) containment building areas are permitted to store dangerous/mixed waste at the WTP. The PT Facility will have five (5) areas permitted to store dangerous/mixed waste , the LAW Facility will have six (6) areas permitted to store dangerous/mixed waste , and the HLW Facility will have ten (10), areas permitted to store dangerous/mixed waste. EMF will not have any containment building areas.

The 712 cubic meters of containment building storage capacity for Process Design Code S06 in Section XII represents the maximum volume of dangerous/mixed waste that can be stored in all containment buildings which includes:

- areas where filled IHLW canisters (65.33 $m^{3)}$ and ILAW containers (109.42 $m^3$) are cooled and stored,
- areas where failed melters are temporarily stored (LAW 299.38 $m^3$) (HLW 121.94 $m^3$),
- areas where secondary wastes such as containers, uncontainerized process equipment, and various other items awaiting decontamination, treatment or repackaging are stored 115.8 $m^3$).

(T01)

A total of ninety-seven (97) tank treatment units will be permitted to treat dangerous/mixed waste at the WTP.

The 9,000 gal/day Process Design Capacity for the T01 process code in Section XII was cacluated using the baseline configuration where the volumetric flow from Tank Farms to the Pretreatment Facility where it is treated and sent to either the LAW Facility or HLW Facililty for vitrification. The volumetric flow is calculated by adding the feed rate for HLW feed (0.64 $ft^3$/min) and LAW feed (0.17 $ft^3$/min) and converting the rate to gallons per day.

The nine (9) Direct Feed LAW Effluent Management Facility Process System (DEP) tanks/vessels that will be permitted for treatment, and corresponding rooms are:

- DEP-VSL-00001-Low-point drain vessel (ED-8001)
- DEP-VSL-00002-Evaporator feed vessel (E-0105)
- DEP-VSL-00003A-Evaporator concentrate vessel (E-0105)
- DEP-VSL-00003B-Evaporator concentrate vessel (E-0105)
- DEP-VSL-00003C- Evaporator concentrate vessel (E-0105)
- DEP-VSL-00004A- Overhead sampling vessel (E-0106)
- DEP-VSL-00004B- Overhead sampling vessel (E-0106)
- DEP-VSL-00005A- Process condensate lag storage vessel (E-0106)
- DEP-VSL-00005B- Process condensate lag storage vessel (E-0106)

Although the nine EMF tanks were added as treatment units to the Process Total Number of Units in Section XII, the tanks are not considered in the Process Design Capacity, as the baseline configuration is considered to be a bounding scenario for tank treatment in WTP operations.

(T04)

A total of four (4) treatment units will be used to treat mixed waste through vitrification. The LAW Facility will have two (2) tanks (melters) and the HLW Facility will have (2) tanks (melters) permitted to treat the mixed waste via vitrification.

The 21,000 gal/day Process Design Capacity for T04 in Sections XII and XIII is based on the maximum rate that waste can be treated in all melters. The Process Design Capacity is additive and equal to the maximum volumetric flow into the HLW melters (1.52 $ft^3$/min) and LAW melters (0.42$ft^3$/min) melters after glass formers are added. The EMF will not have any treatment units. The combined volumetric flow is calculated by adding the flow rates of 1.52 $ft^3$/min and 0.42 $ft^3$/min then converting the rate to gallons per day for a total value of 20,898 gal/day rounded to 21,000 gal/day.

(X99)

A total of eighteen (18) miscellaneous units (MUs) will be permitted to manage the dangerous/mixed waste in EMF. These units are comprised of six (6) units involved in waste evaporation, four (4) filtration units, and eight (8) units associated with the vessel vent system.

The 600 gal/hour Process Design Capacity for the units involved in evaporation addressed under X99 in Sections XII and XIII is based on a maximum inflow feed rate of 10 gal/min multiplied by 60 min/hr for a feed rate of 600 gal/hr.

The six (6) units involved in waste evaporation that will be permitted, and corresponding rooms are:

- DEP-HX-00001- Evaporator concentrate/feed vessels LAW effluent cooler (E-0103)
- DEP-EVAP-00001-DEP Evaporator separator vessel (E-0103)
- DEP-COND-00001-DEP Evaporator primary condenser (E-0102)
- DEP-COND-00002-DEP Evaporator inter-condenser (E-0102)
- DEP-COND-00003- DEP Evaporator after-condenser (E-0102)
- DEP-RBLR-00001- DEP Evaporator reboiler (E-0103)

The 9,720 gallons/hr Process Design Capacity for units involved in filtration in Sections XII and XIII is based on the highest designed flowrate capacity of the filters, which is 162 gal/min for the DEP evaporator feed prefilter (DEP-FILT-00003 ) multiplied by 60 min/hr for a flowrate capacity of 9,720 gal/hr.

The four (4) filtration system units that will be permitted, and corresponding rooms are:

- DEP-FILT-00002-DEP Process condensate filter (E-0103)
- DEP-FILT-00003-DEP Evaporator feed prefilter (E-0103)
- DEP-FILT-00004A-DEP Condensate duplex cartridge filter (E-0102)
- DEP-FILT-00004B-DEP Condensate duplex cartridge filter (E0102)

The remaining eight (8) MUs are managed under the WTP air permits listed in Section X. These MUs associated with the Direct Feed LAW Effluent Management Facility Vessel Vent System (DVP), and corresponding rooms are:

- DVP-HEPA-00003A- Process ventilation primary HEPA filters (E-0102A)
- DVP-HEPA-00003B- Process ventilation primary HEPA filters (E-0102A)
- DVP-HEPA-00004A-Process ventilation secondary HEPA filters (E-0102A)
- DVP-HEPA-00004B- Process ventilation secondary HEPA filters (E-0102A)
- DVP-EXHR-00001A- Process ventilation exhausters (E-0102)
- DVP-EXHR-00001B- Process ventilation exhausters (E-0102)
- DVP-HTR-00001A- Process ventilation preheater (E-0102)
- DVP-HTR-00001B- Process ventilation preheater (E-0102)

Process Codes

S01 = Storage in containers
S02 = Tank storage
S06 = Containment building storage
T01 = Tank treatment
T04 = Other treatment (vitrification)
X99= Other Processes

**EXAMPLE FOR COMPLETING ITEMS XII and XIII (shown in lines numbered X-1, X-2, and X-3 below):** A facility has two storage tanks that hold 1200 gallons and 400 gallons respectively. There is also treatment in tanks at 20 gallons/hr. Finally, a one-quarter acre area that is two meters deep will undergo *in situ vitrification.*

| Section XII. Process Codes and Design Capacities | | | | | | | | Section XIII. Other Process Codes | | | | | | | | |
|---|---|---|---|---|---|---|---|---|---|---|---|---|---|---|---|---|
| Line Number | | A. Process Codes (enter code) | | | B. Process Design Capacity | | C. Process Total Number of Units | Line Number | | A. Process Codes (enter code) | | | B Process Design Capacity | | C. Process Total Number of Units | D. Process Description |
| | | | | | 1. Amount | 2. Unit of Measure (enter code) | | | | | | | 1. Amount | 2. Unit of Measure (enter code) | | |
| X | 1 | S | 0 | 2 | 1,600 | G | 002 | X | 1 | T | 0 | 4 | 700 | C | 001 | In situ vitrification |
| X | 2 | T | 0 | 3 | 20 | E | 001 | | | | | | | | | |
| X | 3 | T | 0 | 4 | 700 | C | 001 | | | | | | | | | |
| | 1 | S | 0 | 1 | 1,089,000 | G | 006 | | 1 | T | 0 | 4 | 21,000 | U | 004 | Vitrification |
| | 2 | S | 0 | 2 | 5,717,000 | G | 097 | | 2 | X | 9 | 9 | 600 | E | 006 | Evaporation |

| | | | | | | | | | | | | | | | | |
|---|---|---|---|---|---|---|---|---|---|---|---|---|---|---|---|---|
| | 3 | S | 0 | 6 | 712 | C | 021 | | 5 | X | 9 | 9 | 9,720 | E | 004 | Filtration |
| | 4 | T | 0 | 1 | 9,000 | U | 097 | | | | | | | | | |
| | 5 | T | 0 | 4 | 21,000 | U | 004 | | | | | | | | | |
| | 6 | X | 9 | 9 | 600 | E | 006 | | | | | | | | | |
| | 7 | X | 9 | 9 | 9,720 | E | 004 | | | | | | | | | |
| | | | | | | | | | | | | | | | | |

## XIV. Description of Dangerous Wastes

**Example for completing this section:** A facility will receive three non-listed wastes, then store and treat them on-site. Two wastes are corrosive only, with the facility receiving and storing the wastes in containers. There will be about 200 pounds per year of each of these two wastes, which will be neutralized in a tank. The other waste is corrosive and ignitable and will be neutralized then blended into hazardous waste fuel. There will be about 100 pounds per year of that waste, which will be received in bulk and put into tanks.

| Line Number | | | A. Dangerous Waste No. (enter code) | | | | B. Estimated Annual Quantity of Waste | C. Unit of Measure (enter code) | D. Processes | | | | | | | | | |
|---|---|---|---|---|---|---|---|---|---|---|---|---|---|---|---|---|---|---|
| | | | | | | | | | (1) Process Codes (enter) | | | | | | | | | (2) Process Description [If a code is not entered in D (1)] |
| X | 1 | | D | 0 | 0 | 2 | 400 | P | S | 0 | 1 | T | 0 | 1 | | | | |
| X | 2 | | D | 0 | 0 | 1 | 100 | P | S | 0 | 2 | T | 0 | 1 | | | | |
| X | 3 | | D | 0 | 0 | 2 | | | | | | | | | | | | Included with above |
| | | 1 | D | 0 | 0 | 1 | 16,300 | T | S | 0 | 2 | | | | | | | |
| | | 2 | D | 0 | 0 | 2 | | T | S | 0 | 2 | T | 0 | 1 | | | | Included with above |
| | | 3 | D | 0 | 0 | 3 | | T | S | 0 | 2 | | | | | | | Included with above |
| | | 4 | D | 0 | 0 | 4 | | T | S | 0 | 2 | T | 0 | 1 | | | | Included with above |
| | | 5 | D | 0 | 0 | 5 | | T | | | | | | | | | | Included with above |
| | | 6 | D | 0 | 0 | 6 | | T | | | | | | | | | | Included with above |
| | | 7 | D | 0 | 0 | 7 | | T | | | | | | | | | | Included with above |
| | | 8 | D | 0 | 0 | 8 | | T | | | | | | | | | | Included with above |
| | | 9 | D | 0 | 0 | 9 | | T | | | | | | | | | | Included with above |
| | | 1 | D | 0 | 1 | 0 | | T | | | | | | | | | | Included with above |
| | 1 | 1 | D | 0 | 1 | 1 | | T | | | | | | | | | | Included with above |
| | 1 | 2 | D | 0 | 1 | 8 | | T | | | | | | | | | | Included with above |
| | 1 | 3 | D | 0 | 1 | 9 | | T | | | | | | | | | | Included with above |
| | 1 | 4 | D | 0 | 2 | 2 | | T | | | | | | | | | | Included with above |
| | 1 | 5 | D | 0 | 2 | 8 | | T | | | | | | | | | | Included with above |
| | 1 | 6 | D | 0 | 2 | 9 | | T | | | | | | | | | | Included with above |
| | 1 | 7 | D | 0 | 3 | 0 | | T | | | | | | | | | | Included with above |
| | 1 | 8 | D | 0 | 3 | 3 | | T | | | | | | | | | | Included with above |
| | 1 | 9 | D | 0 | 3 | 4 | | T | | | | | | | | | | Included with above |
| | 2 | 0 | D | 0 | 3 | 5 | | T | | | | | | | | | | Included with above |
| | 2 | 1 | D | 0 | 3 | 6 | | T | | | | | | | | | | Included with above |

| | | | | | | | | | | | | | | | | | | |
|---|---|---|---|---|---|---|---|---|---|---|---|---|---|---|---|---|---|---|
| | 2 | 0 | D | 0 | 3 | 8 | | T | | | | | | | | | | Included with above |
| | 2 | 2 | D | 0 | 3 | 9 | | T | | | | | | | | | | Included with above |
| | 2 | 3 | D | 0 | 4 | 0 | | T | | | | | | | | | | Included with above |
| | 2 | 4 | D | 0 | 4 | 1 | | T | | | | | | | | | | Included with above |
| | 2 | 5 | D | 0 | 4 | 3 | | T | | | | | | | | | | Included with above |
| | 2 | 6 | W | T | 0 | 1 | | T | | | | | | | | | | Included with above |
| | 2 | 7 | W | T | 0 | 2 | | T | | | | | | | | | | Included with above |
| | 2 | 8 | W | P | 0 | 1 | | T | | | | | | | | | | Included with above |
| | 2 | 9 | W | P | 0 | 2 | | T | | | | | | | | | | Included with above |
| | 3 | 0 | F | 0 | 0 | 1 | | T | | | | | | | | | | Included with above |
| | 3 | 1 | F | 0 | 0 | 2 | | T | | | | | | | | | | Included with above |
| | 3 | 2 | F | 0 | 0 | 3 | | T | | | | | | | | | | Included with above |
| | 3 | 3 | D | 0 | 4 | 3 | | T | | | | | | | | | | Included with above |
| | 3 | 4 | W | T | 0 | 1 | | T | | | | | | | | | | Included with above |
| | 3 | 5 | W | T | 0 | 2 | | T | | | | | | | | | | Included with above |
| | 3 | 6 | W | P | 0 | 1 | | T | | | | | | | | | | Included with above |
| | 3 | 7 | W | P | 0 | 2 | | T | | | | | | | | | | Included with above |
| | 3 | 8 | F | 0 | 0 | 1 | | T | | | | | | | | | | Included with above |
| | 3 | 9 | F | 0 | 0 | 2 | | T | | | | | | | | | | Included with above |
| | 4 | 0 | F | 0 | 0 | 3 | | T | | | | | | | | | | Included with above |
| | 4 | 1 | F | 0 | 0 | 4 | | T | | | | | | | | | | Included with above |
| | 4 | 2 | F | 0 | 0 | 5 | | T | | | | | | | | | | Included with above |
| | 4 | 3 | F | 0 | 3 | 9* | | T | | | | | | | | | | Included with above |
| | 4 | 4 | D | 0 | 0 | 2 | 50,700 | T | S | 0 | 1 | T | 0 | 4 | S | 0 | 6 | Vitrification treatment process & storage of ILAW & IHLW |
| | 4 | 5 | D | 0 | 0 | 4 | | T | | | | | | | | | | Included with above |
| | 4 | 6 | D | 0 | 0 | 5 | | T | | | | | | | | | | Included with above |
| | 4 | 7 | D | 0 | 0 | 6 | | T | | | | | | | | | | Included with above |
| | 4 | 8 | D | 0 | 0 | 7 | | T | | | | | | | | | | Included with above |
| | 4 | 9 | D | 0 | 0 | 8 | | T | | | | | | | | | | Included with above |
| | 5 | 0 | D | 0 | 0 | 9 | | T | | | | | | | | | | Included with above |
| | 5 | 1 | D | 0 | 1 | 0 | | T | | | | | | | | | | Included with above |
| | 5 | 2 | D | 0 | 1 | 1 | | T | | | | | | | | | | Included with above |
| | 5 | 3 | D | 0 | 1 | 8 | | T | | | | | | | | | | Included with above |
| | 5 | 4 | D | 0 | 1 | 9 | | T | | | | | | | | | | Included with above |
| | 5 | 5 | D | 0 | 2 | 2 | | T | | | | | | | | | | Included with above |
| | 5 | 6 | D | 0 | 2 | 8 | | T | | | | | | | | | | Included with above |
| | 5 | 7 | D | 0 | 2 | 9 | | T | | | | | | | | | | Included with above |

| | | | | | | | | | | | | | | | | | | |
|---|---|---|---|---|---|---|---|---|---|---|---|---|---|---|---|---|---|---|
| | 5 | 8 | D | 0 | 3 | 0 | | T | | | | | | | | | | Included with above |
| | 5 | 9 | D | 0 | 3 | 3 | | T | | | | | | | | | | Included with above |
| | 6 | 0 | D | 0 | 3 | 4 | | T | | | | | | | | | | Included with above |
| | 6 | 1 | D | 0 | 3 | 5 | | T | | | | | | | | | | Included with above |
| | 6 | 2 | D | 0 | 3 | 6 | | T | | | | | | | | | | Included with above |
| | 6 | 3 | D | 0 | 3 | 8 | | T | | | | | | | | | | Included with above |
| | 6 | 4 | D | 0 | 3 | 9 | | T | | | | | | | | | | Included with above |
| | 6 | 5 | D | 0 | 4 | 0 | | T | | | | | | | | | | Included with above |
| | 6 | 6 | D | 0 | 4 | 1 | | T | | | | | | | | | | Included with above |
| | 6 | 7 | D | 0 | 4 | 3 | | T | | | | | | | | | | Included with above |
| | 6 | 8 | W | T | 0 | 1 | | T | | | | | | | | | | Included with above |
| | 6 | 9 | W | T | 0 | 2 | | T | | | | | | | | | | Included with above |
| | 7 | 0 | W | P | 0 | 1 | | T | | | | | | | | | | Included with above |
| | 7 | 1 | W | P | 0 | 2 | | T | | | | | | | | | | Included with above |
| | 7 | 2 | F | 0 | 0 | 1 | | T | | | | | | | | | | Included with above |
| | 7 | 3 | F | 0 | 0 | 2 | | T | | | | | | | | | | Included with above |
| | 7 | 4 | F | 0 | 0 | 3 | | T | | | | | | | | | | Included with above |
| | 7 | 5 | F | 0 | 0 | 4 | | T | | | | | | | | | | Included with above |
| | 7 | 6 | F | 0 | 0 | 5 | | T | | | | | | | | | | Included with above |
| | 7 | 7 | F | 0 | 3 | 9* | | T | | | | | | | | | | Included with above |
| | 7 | 8 | D | 0 | 0 | 2 | 5,100 | T | S | 0 | 1 | T | 9 | 4 | S | 0 | 6 | Treatment & storage of secondary waste other than ILAW containers and IHLW |
| | 7 | 9 | D | 0 | 0 | 4 | | T | | | | | | | | | | Included with above |
| | 8 | 0 | D | 0 | 0 | 5 | | T | | | | | | | | | | Included with above |
| | 8 | 1 | D | 0 | 0 | 6 | | T | | | | | | | | | | Included with above |
| | 8 | 2 | D | 0 | 0 | 7 | | T | | | | | | | | | | Included with above |
| | 8 | 3 | D | 0 | 0 | 8 | | T | | | | | | | | | | Included with above |
| | 8 | 4 | D | 0 | 0 | 9 | | T | | | | | | | | | | Included with above |
| | 8 | 5 | D | 0 | 1 | 0 | | T | | | | | | | | | | Included with above |
| | 8 | 6 | D | 0 | 1 | 1 | | T | | | | | | | | | | Included with above |
| | 8 | 7 | D | 0 | 1 | 8 | | T | | | | | | | | | | Included with above |
| | 8 | 8 | D | 0 | 1 | 9 | | T | | | | | | | | | | Included with above |
| | 8 | 9 | D | 0 | 2 | 2 | | T | | | | | | | | | | Included with above |
| | 9 | 0 | D | 0 | 2 | 8 | | T | | | | | | | | | | Included with above |
| | 9 | 1 | D | 0 | 2 | 9 | | T | | | | | | | | | | Included with above |
| | 9 | 2 | D | 0 | 3 | 0 | | T | | | | | | | | | | Included with above |
| | 9 | 3 | D | 0 | 3 | 3 | | T | | | | | | | | | | Included with above |
| | 9 | 4 | D | 0 | 3 | 4 | | T | | | | | | | | | | Included with above |

| | | | | | | | | | | | | | | | | | | |
|---|---|---|---|---|---|---|---|---|---|---|---|---|---|---|---|---|---|---|
| | 9 | 5 | D | 0 | 3 | 5 | | T | | | | | | | | | | Included with above |
| | 9 | 6 | D | 0 | 3 | 6 | | T | | | | | | | | | | Included with above |
| | 9 | 7 | D | 0 | 3 | 8 | | T | | | | | | | | | | Included with above |
| | 9 | 8 | D | 0 | 3 | 9 | | T | | | | | | | | | | Included with above |
| | 9 | 9 | D | 0 | 4 | 0 | | T | | | | | | | | | | Included with above |
| 1 | 0 | 0 | D | 0 | 4 | 1 | | T | | | | | | | | | | Included with above |
| 1 | 0 | 1 | D | 0 | 4 | 3 | | T | | | | | | | | | | Included with above |
| 1 | 0 | 2 | W | T | 0 | 1 | | T | | | | | | | | | | Included with above |
| 1 | 0 | 3 | W | T | 0 | 2 | | T | | | | | | | | | | Included with above |
| 1 | 0 | 4 | W | P | 0 | 1 | | T | | | | | | | | | | Included with above |
| 1 | 0 | 5 | W | P | 0 | 2 | | T | | | | | | | | | | Included with above |
| 1 | 0 | 6 | F | 0 | 0 | 1 | | T | | | | | | | | | | Included with above |
| 1 | 0 | 7 | F | 0 | 0 | 2 | | T | | | | | | | | | | Included with above |
| 1 | 0 | 8 | F | 0 | 0 | 3 | | T | | | | | | | | | | Included with above |
| 1 | 0 | 9 | F | 0 | 0 | 4 | | T | | | | | | | | | | Included with above |
| 1 | 1 | 0 | F | 0 | 0 | 5 | | T | | | | | | | | | | Included with above |
| 1 | 1 | 1 | F | 0 | 3 | 9* | | T | | | | | | | | | | Included with above |

Footnote From Section XIV

*F039 is a multisource leachate included as a waste derived from non-specific source wastes F001 through F005

*Waste codes for ignitability (D001) and reactivity (D003) apply only to the waste while it is in the pretreatment facility. LAW feed receipt FRP vessels and the HLW feed receipt vessel. Downstream of these vessels, the D001 and D003 waste codes are administratively removed from the project's waste streams.

## XV. Map

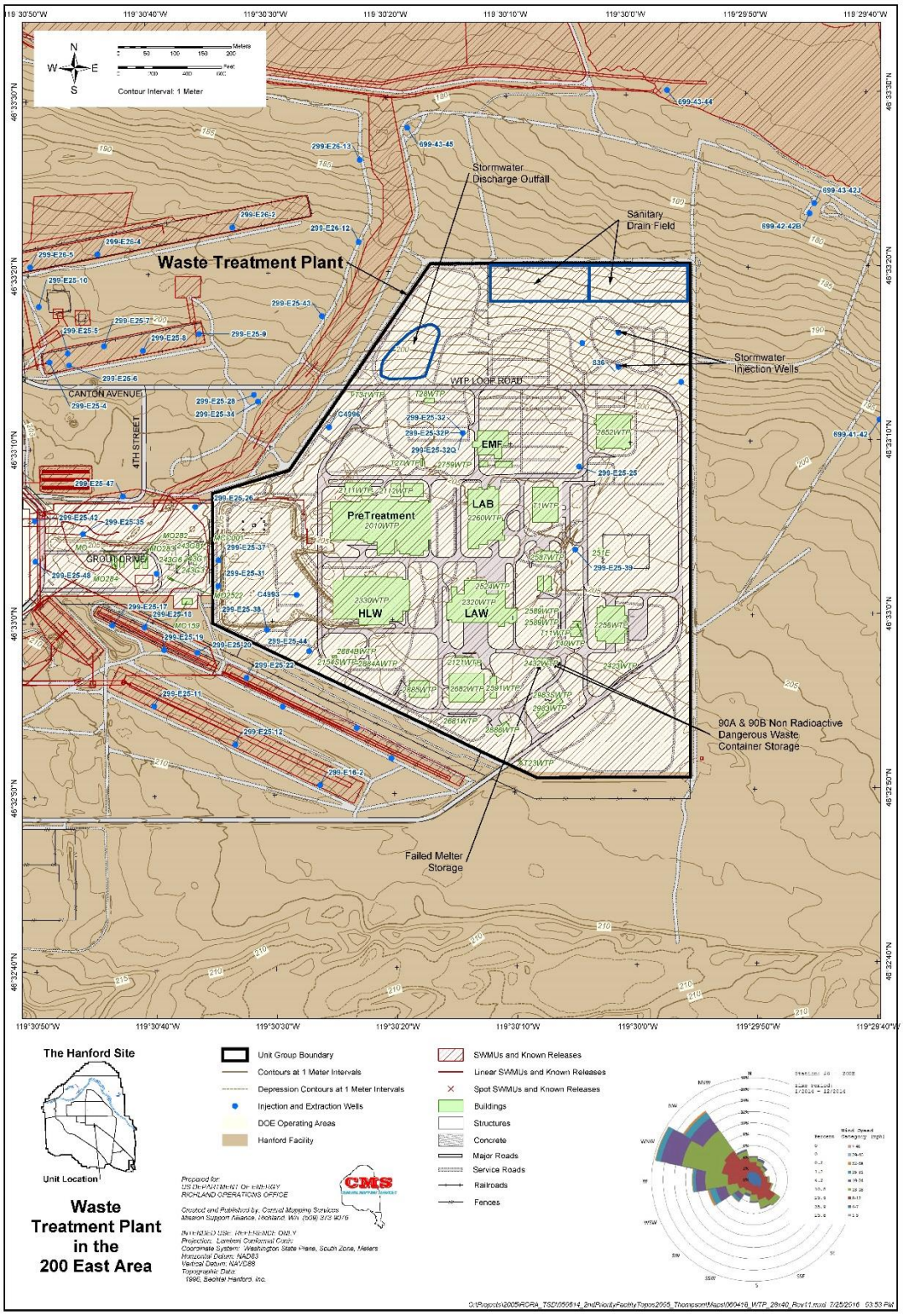


## XVI. Facility Drawing

**All existing facilities must include a scale drawing of the facility (refer to Instructions for more detail).**

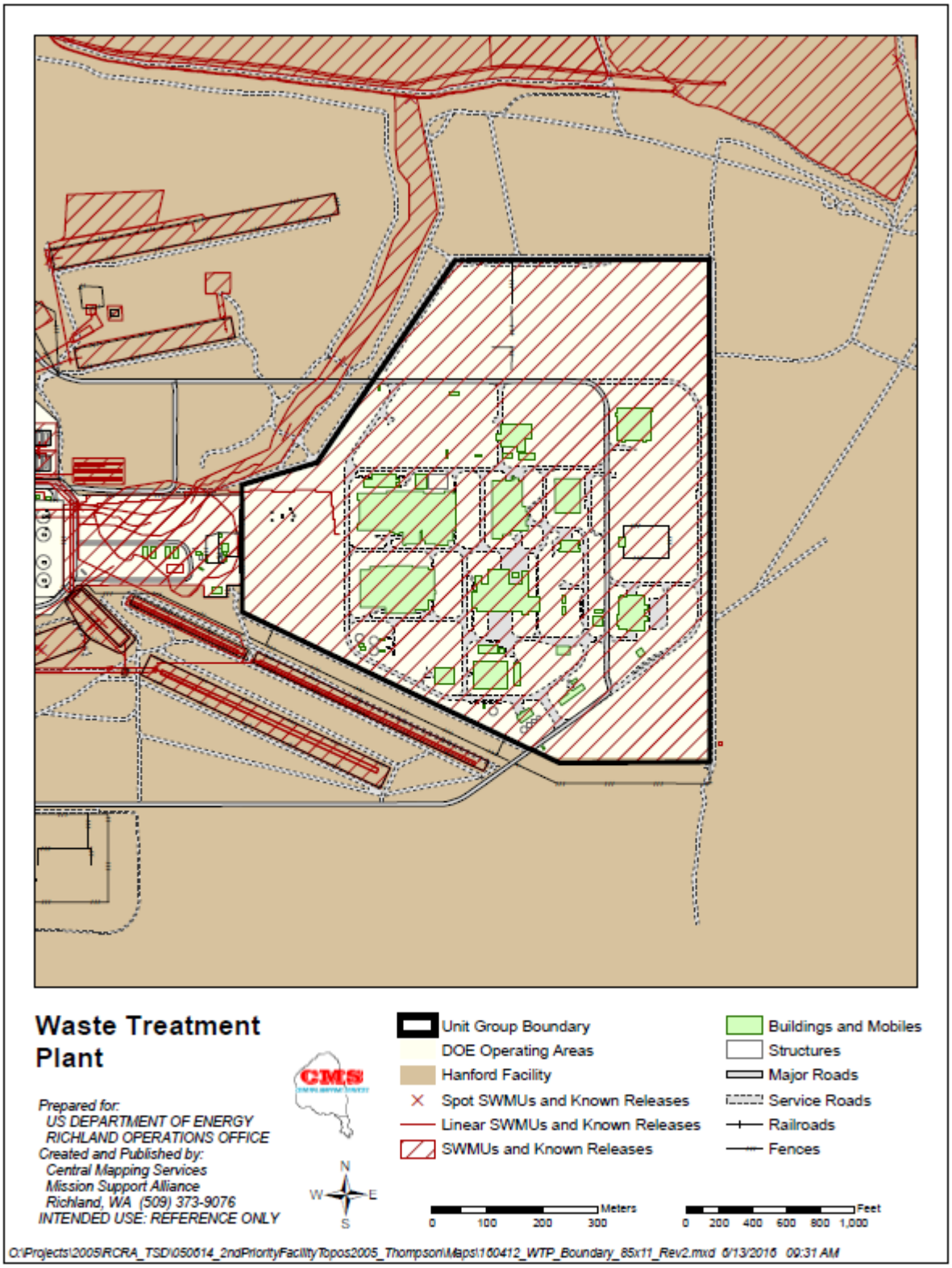

## XVII. Photographs

**All existing facilities must include photographs (aerial or ground-level) that clearly delineate all existing structures; existing storage, treatment, recycling, and disposal areas; and sites of future storage, treatment, recycling, or disposal areas (refer to Instructions for more detail).**

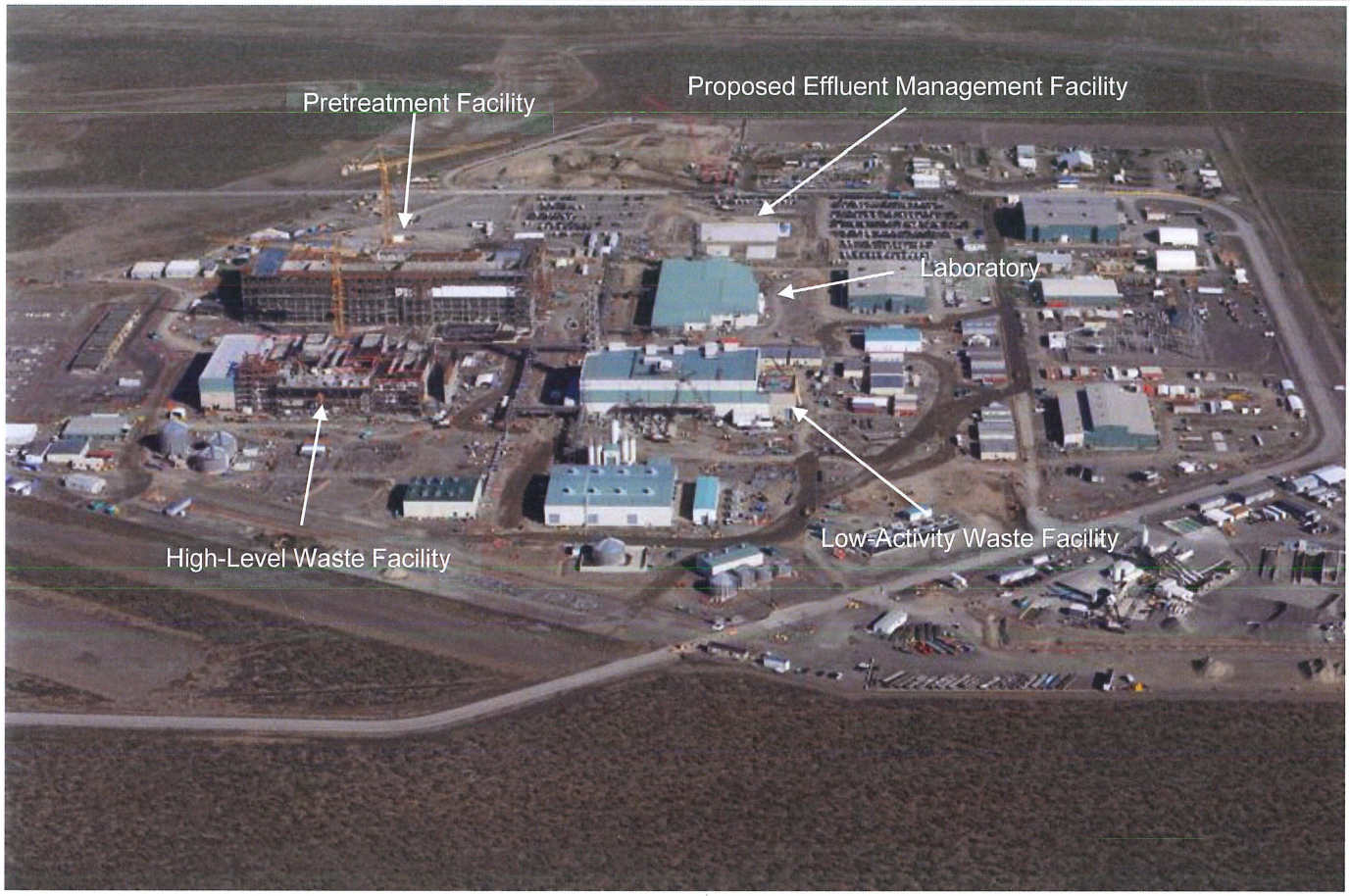


Photograph Date: 2016

## XVIII. Certifications

**I certify under penalty of law that this document and all attachments were prepared under my direction or supervision in accordance with a system designed to assure that qualified personnel properly gather and evaluate the information submitted. Based on my inquiry of the person or persons who manage the system, or those persons directly responsible for gathering the information, the information submitted is, to the best of my knowledge and belief, true, accurate, and complete. I am aware that there are significant penalties for submitting false information, including the possibility of fine and imprisonment for knowing violations.**

| Operator<br>Name and Official Title (type or print) | Signature | Date Signed |
|---|---|---|
| Kevin W. Smith, Manager<br>U.S. Department of Energy<br>Office of River Protection | Kevin W. Smith | 11/20/16 |

| Co-Operator*<br>Name and Official Title (type or print)<br>Peggy G. McCullough<br>Project Director<br>Bechtel National, Inc. | Signature<br>Margaret G. McCullough | Date Signed<br>11/16/16 |
|---|---|---|
| **Co-Operator*** – Address and Telephone Number<br>2435 Stevens Center Place<br>Richland, WA 99352<br>(509) 371-2335 | | |
| **Facility-Property Owner**<br>Name and Official Title (type or print)<br>Kevin W. Smith, Manager<br>U.S. Department of Energy<br>Office of River Protection | Signature<br>Kevin W. Smith | Date Signed<br>11/28/16 |
| **Comments** | | |
| | | |

# WASTE TREATMENT AND IMMOBILIZATION PLANT
# CHAPTER 2.0
# TOPOGRAPHIC MAP

## CHANGE CONTROL LOG

Change Control Logs ensure that changes to this unit are performed in a methodical, controlled, coordinated, and transparent manner. Each unit addendum will have its own change control log with a modification history table. The "**Modification Number**" represents Ecology's method for tracking the different versions of the permit. This log will serve as an up to date record of modifications and version history of the unit.

Modification History Table

| Modification Date | Modification Number |
|---|---|
| 09/05/2017 | 8C.2017.6F |
| | |

This page intentionally left blank.

# CHAPTER 2.0
# TOPOGRAGHIC MAP

This page intentionally left blank.

# CHAPTER 2.0
# TOPOGRAPHIC MAP

## TABLE OF CONTENTS

2.0 TOPOGRAPHIC MAP ..... 5

## FIGURES

Figure 2A-1 - DWP WTP Site Vicinity Map
Figure 2A-2 - WTP Site Topography Map
Figure 2A-3 - DWP WTP Site Map

This page intentionally left blank.

# 2.0 TOPOGRAPHIC MAP

This chapter contains the Waste Treatment Plant topographic map, which meets the Waste Treatment Plant Dangerous Waste Permit Application requirements as detailed in WAC 173-303-806(4)(a)(xviii). The official version of the topographic map is located at the Ecology Richland office.

This page intentionally left blank.

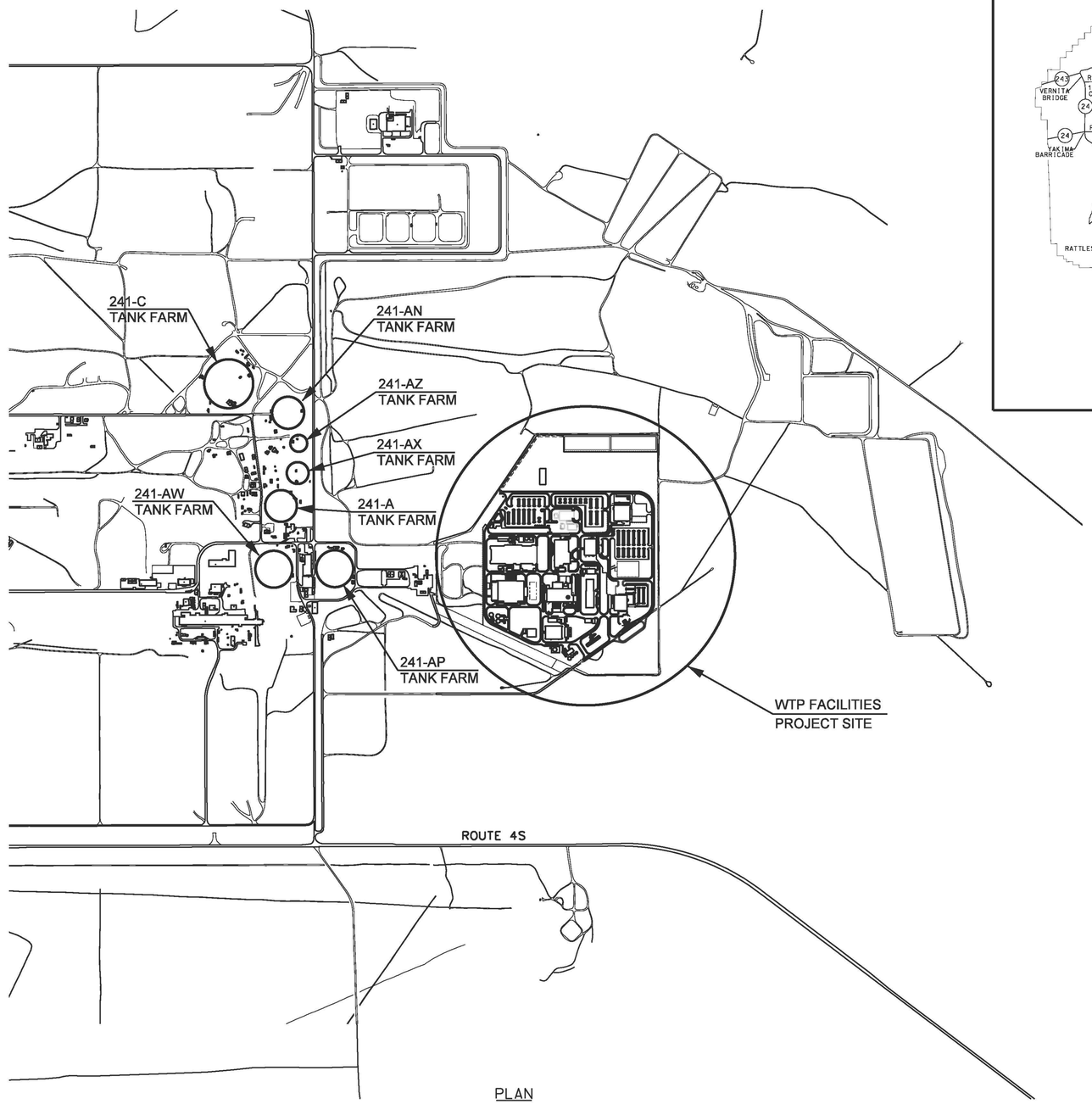


PLAN

500 250 0 500 1000 FT

GRAPHIC SCALE

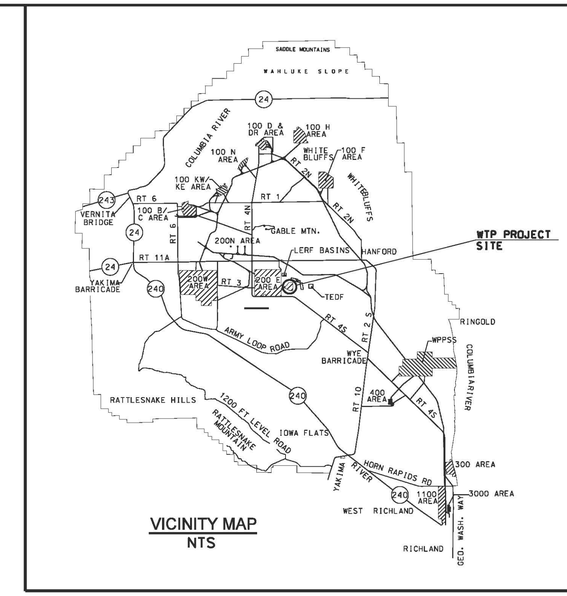


VICINITY MAP
NTS

WA 7890008967, CHAPTER 2.0
HANFORD TANK WASTE TREATMENT
AND IMMOBILIZATION PLANT
010/2016

RIVER PROTECTION PROJECT
WASTE TREATMENT PLANT
2435 STEVENS CENTER PLACE
RICHLAND, WA 99354

CONTRACT No: DE-AC27-01RV14136

DWP WTP
SITE VICINITY

SCALE: | FIGURE 2A-1 | REV

"E" SIZE - 44x34
COMPUTER GENERATED - MANUAL
DESIGN CHANGES NOT PERMITTED

11/2/2016 2:51:31 PM

PLOTTED BY: tgrlich

01-2A-1A-wpc-h-20160024-1.dgn

FORM E_SDN.DGN 02/2009

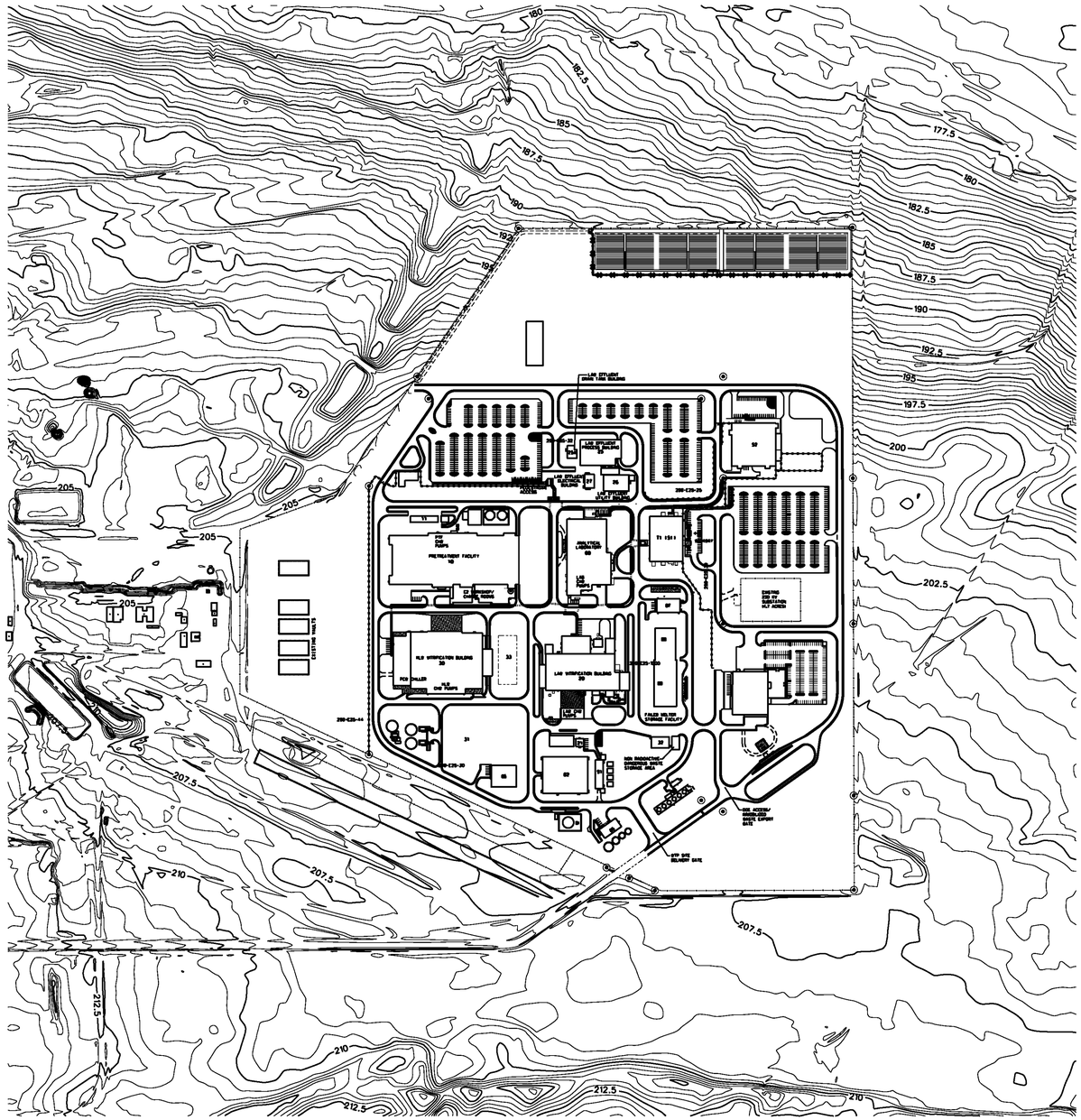


PLAN

200 100 0 200 400 FT

GRAPHIC SCALE

WIND ROSE FOR: 200E AREA
STATION NO. 6

PERIOD COVERED
1/1/93 - 12/31/93

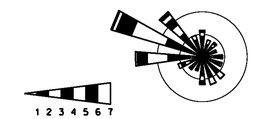


PADDLES INDICATE DIRECTION WIND IS COMING FROM.
RADIAL GRIDS REPRESENT 5.0% AND 10% OCCURRENCE.

| WIND CLASS | MILES/HOUR |
|---|---|
| 1 | > 1 - 3 |
| 2 | 4 - 7 |
| 3 | 8 - 12 |
| 4 | 13 - 18 |
| 5 | 19 - 24 |
| 6 | 25 - 31 |
| 7 | 32 + |

WIND CLASS

LEGEND:

- SECURITY FENCE
- EXISTING FENCE
- PEDESTRIAN TURNSYLE
- SWING GATE
- WTP PROJECT SITE BOUNDARY
- 190 MAJOR CONTOURS (IN METERS ABOVE MEAN SEA LEVEL)
- MINOR CONTOURS (IN METERS ABOVE MEAN SEA LEVEL)
- PROPERTY LINE

WA 7890008967, CHAPTER 2.0
HANFORD TANK WASTE TREATMENT
AND IMMOBILIZATION PLANT
10/2016

RIVER PROTECTION PROJECT
WASTE TREATMENT PLANT
2435 STEVENS CENTER PLACE
RICHLAND, WA 99354

CONTRACT No: DE-AC27-01RV14136

WTP
SITE TOPOGRAPHY MAP

SCALE: | FIGURE 2A-2 | REV

'E' SIZE - 44x34
COMPUTER GENERATED - MANUAL
DESIGN CHANGES NOT PERMITTED

11/2/2016 2:58:12 PM

PLOTTED BY: tgrisch

Q:\2A-2A\wtpc3c\010002b\2-2ap

FORM E_SDN.DGN 02/2009

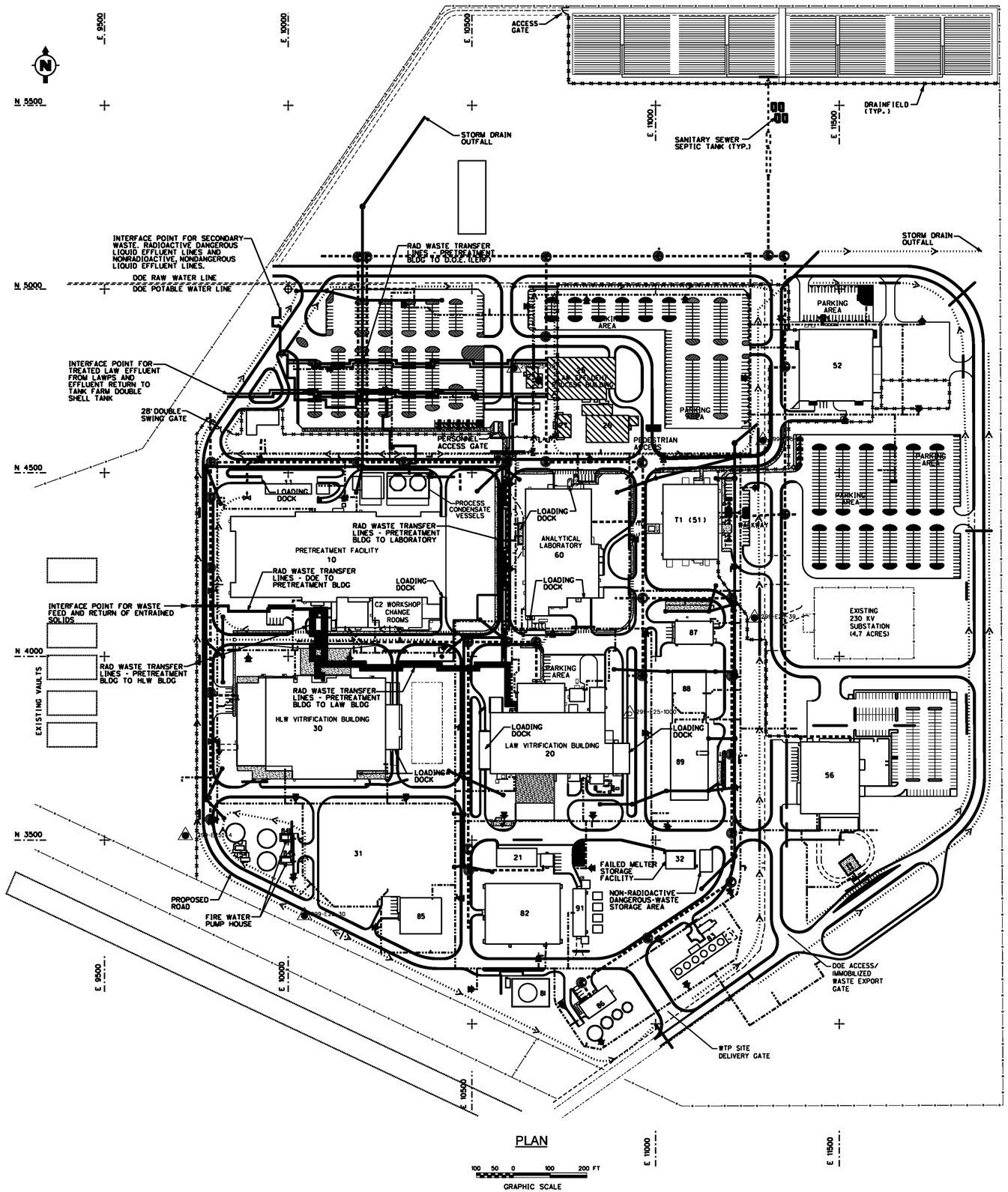


PLAN

100 50 0 100 200 FT

GRAPHIC SCALE

| DANGEROUS WASTE MANAGEMENT UNITS | |
|---|---|
| BUILDING NO. | BUILDING |
| 10 | PRETREATMENT FACILITY |
| 20 | LAW VITRIFICATION BUILDING |
| 30 | HLW VITRIFICATION BUILDING |
| 32 | FAILED MELTER STORAGE FACILITY |
| 60 | ANALYTICAL LABORATORY |
| | PROCESS CONDENSATE VESSELS |
| 25 | LAW EFFLUENT PROCESS BUILDING |
| 25A | LAW EFFLUENT DRAIN TANK BUILDING |

| LOADING/UNLOADING DOCKS | |
|---|---|
| BUILDING NO. | BUILDING |
| 10 | PRETREATMENT FACILITY |
| 11 | WET CHEMICAL STORAGE FACILITY |
| 20 | LAW VITRIFICATION BUILDING |
| 21 | GLASS FORMER STORAGE FACILITY |
| 30 | HLW VITRIFICATION BUILDING |
| 32 | FAILED MELTER STORAGE FACILITY |
| 60 | ANALYTICAL LABORATORY |

| OTHER BUILDING DESCRIPTIONS | |
|---|---|
| BUILDING NO. | BUILDING |
| 22 | SPENT MELTER STAGING |
| 31 | MELTER ASSEMBLY PAD |
| T1150 | ADMINISTRATION BUILDING |
| 52 | WAREHOUSE |
| 54 | NON-DANGEROUS, NON-RADIOACIVE EFFLUENT FACILITY |
| 56 | COMBINATION SHOP (FIT, MAINT. SHOP AND OFFICE SPACE) |
| 81 | FUEL OIL FACILITY |
| 82 | CHILLER COMPRESSOR PLANT |
| 83 | COOLING TOWER FACILITY |
| 84A & 84B | FIRE WATER PUMP HOUSE FACILITY |
| 85 | STEAM PLANT FACILITY |
| 86 | WATER TREATMENT BUILDING |
| 87 | SWITCHGEAR BUILDING |
| 88 | ITS SWITCHGEAR BUILDING |
| 89 | DIESEL GENERATORS FACILITY |
| 91 | BOF SWITCHGEAR BUILDING |
| 26 | LAW EFFLUENT UTILITY BUILDING |
| 27 | LAW EFFLUENT ELECTRICAL BUILDING |

## LEGEND:

- DOE SUPPLIED WATER LINES
- FIRE WATER LINE
- SANITARY SEWER LINE
- STORM DRAIN
- DFLAW EFFLUENT LINES
- ROADWAY DITCH
- EXISTING TRANSFER LINE
- EXISTING FENCE
- SECURITY FENCE
- EMF OPERATIONAL UNITS
- EXISTING ROAD
- FUTURE FACILITY

## SYMBOLS:

- FIRE HYDRANT
- SANITARY SEWER MANHOLE
- SEPTIC TANK
- STORM DRAIN CATCH BASIN / MANHOLE
- 2003 DOE GROUNDWATER MONITORING WELL
- 2003 DECOMMISSIONED DOE GROUNDWATER MONITORING WELL
- PEDESTRIAN TURNSYLE
- SWING GATE
- SLIDING GATE
- ACCESS GATE
- SITE COORDINATE GRID POINT

WA 7890008967, CHAPTER 2.0
HANFORD TANK WASTE TREATMENT
AND IMMOBILIZATION PLANT
10/2016

RIVER PROTECTION PROJECT
WASTE TREATMENT PLANT
2435 STEVENS CENTER PLACE
RICHLAND, WA 99354

CONTRACT No: DE-AC27-01RV14136

DWP WTP
SITE MAP

SCALE: | FIGURE 2A-3 | REV

'E' SIZE - 44x34
COMPUTER GENERATED - MANUAL DESIGN CHANGES NOT PERMITTED

11/7/2016 1:01:22 PM

PLOTTED BY: lgrijalva

FORM E_SDNLDGN 02/2009

# WASTE TREATMENT AND IMMOBILIZATION PLANT
# APPENDIX 3A
# WASTE TREATMENT AND IMMOBILIZATION PLANT WASTE ANALYSIS PLAN

## CHANGE CONTROL LOG

Change Control Logs ensure that changes to this unit are performed in a methodical, controlled, coordinated, and transparent manner. Each unit addendum will have its own change control log with a modification history table. The "**Modification Number**" represents Ecology's method for tracking the different versions of the permit. This log will serve as an up to date record of modifications and version history of the unit.

Modification History Table

| Modification Date | Modification Number |
|---|---|
| 09/05/2017 | 8C.2017.6F |
| 03/2007 | |
| | |

This page intentionally left blank.

# APPENDIX 3A
# WASTE TREATMENT AND IMMOBILIZATION PLANT WASTE ANALYSIS PLAN

This page intentionally left blank.

# APPENDIX 3A
# WASTE TREATMENT AND IMMOBILIZATION PLANT WASTE ANALYSIS PLAN

## TABLE OF CONTENTS

ACRONYMS ..... vii
GLOSSARY ..... ix
3A.1 INTRODUCTION ..... 11
3A.1.1 Overview ..... 11
3A.1.2 Background ..... 12
3A.2 WASTE TREATMENT AND IMMOBILIZATION PLANT UNIT DESCRIPTION ..... 12
3A.2.1 Pretreatment ..... 13
3A.2.2 Vitrification Systems ..... 14
3A.2.2.1 Low-Activity Waste Vitrification ..... 14
3A.2.2.2 High-Level Waste Vitrification ..... 15
3A.2.3 Effluent Management Facility ..... 15
3A.2.4 Offgas Treatment Systems ..... 16
3A.2.4.1 Pretreatment Facility Offgas ..... 16
3A.2.4.2 Low-Activity Waste Vitrification Offgas ..... 16
3A.2.4.3 Effluent Management Facility Offgas ..... 17
3A.2.4.4 High Level Waste Vitrification Offgas ..... 17
3A.2.4.5 Air Emissions ..... 17
3A.3 WASTE ACCEPTANCE ..... 18
3A.3.1 Waste Feed Acceptance Process ..... 19
3A.3.1.1 Waste Feed Profile ..... 19
3A.3.1.2 Preshipment Review ..... 19
3A.3.1.3 Nonconformance Action ..... 19
3A.3.1.4 Waste Feed Transfer ..... 20
3A.3.1.5 Waste Feed Confirmation ..... 20
3A.3.2 Waste Acceptance Criteria ..... 21
3A.3.2.1 Total Organic Carbon ..... 22
3A.3.2.2 Polychlorinated Biphenyls ..... 22
3A.3.2.3 pH ..... 22
3A.3.2.4 Compatibility ..... 22
3A.3.2.5 Metals ..... 23

3A.3.2.6 Organic Chemicals ..... 23
3A.3.2.7 Anions ..... 23
3A.3.2.8 Ammonia ..... 24
3A.3.2.9 Cyanide ..... 24
3A.3.3 Analytical Services ..... 24
3A.3.4 Waste Feed Designation ..... 24
3A.3.4.1 Ignitable Waste ..... 25
3A.3.4.2 Reactive Waste ..... 26
3A.4 WASTE FEED CHARACTERIZATION ..... 27
3A.4.1 Sampling Methods and Sampling Frequency ..... 27
3A.4.2 Sample Preservation, Storage, and Holding Times ..... 27
3A.4.3 Selection of Analytes ..... 27
3A.4.4 Selection of Analytical Methods ..... 27
3A.4.5 Quality Assurance and Quality Control ..... 27
3A.5 SECONDARY WASTE STREAMS ..... 28
3A.5.1 Secondary Solid Waste Streams ..... 29
3A.5.1.1 Solid Waste Designated as Mixed Waste ..... 29
3A.5.1.2 Variable Solid Waste Streams ..... 30
3A.5.2 Liquid Waste Streams ..... 31
3A.5.3 Treatment, Storage, or Disposal Unit Waste Acceptance Criteria ..... 32
3A.6 Land Disposal Restrictions Evaluation for Immobilized Waste ..... 32
3A.7 WASTE TRANSFER DOCUMENTATION SYSTEM ..... 34
3A.7.1 Solid Waste Transfer ..... 34
3A.7.2 Liquid Waste Transfer ..... 34
3A.7.3 Land Disposal Restrictions Notification and Certification ..... 34
3A.8 TRACKING SYSTEM ..... 34
3A.8.1 Inventory and Batch Tracking ..... 35
3A.8.2 Sample Tracking ..... 35
3A.8.3 Secondary Waste Stream Tracking ..... 35
3A.9 RECORDKEEPING ..... 36
3A.10 REFERENCES ..... 36
3A.10.1 Project Documents ..... 36
3A.10.2 Codes and Standards ..... 37
3A.10.3 Other Documents ..... 39

## TABLES

Table 3A-1 Summary of the Waste Feed Acceptance Process ..... 41
Table 3A-2 Waste Feed Analysis, Waste Acceptance Criteria, and Nonconformance Actions ..... 43
Table 3A-3 Summary of Dangerous Waste Numbers for WTP ..... 47
Table 3A-4 Properties for the Determination of Ignitable Waste ..... 48
Table 3A-5 Properties for the Determination of Reactive Waste ..... 49
Table 3A-6 Secondary Solid Mixed Waste Streams ..... 50
Table 3A-7 Variable Solid Waste Streams ..... 50
Table 3A-8 Liquid Mixed Waste Streams ..... 51

This page intentionally left blank.

# ACRONYMS

| | |
|---|---|
| ALARA | as low as reasonably achievable |
| CRV | concentrate receipt vessel |
| DOE | US Department of Energy |
| DST | double-shell tank |
| DWP | *WTP Dangerous Waste Permit* |
| Ecology | Washington State Department of Ecology |
| EMF | Effluent Management Facility |
| EPA | US Environmental Protection Agency |
| ETF | Effluent Treatment Facility |
| FRP | waste feed receipt process system |
| HEME | high-efficiency mist eliminator |
| HEPA | high-efficiency particulate air (filter) |
| HLVIT | high-level vitrification |
| HLW | high-level waste |
| ICN | Integrated Control Network |
| ID | identification |
| IHLW | immobilized high-level waste |
| ILAW | immobilized low-activity waste |
| Lab | Analytical Laboratory |
| LAW | low-activity waste |
| LDR | Land Disposal Restrictions |
| LERF | Liquid Effluent Retention Facility |
| LIMS | laboratory information management system |
| NRC | US Nuclear Regulatory Commission |
| PCB | polychlorinated biphenyl |
| PDWRS | plant data warehouse and reporting system |
| PIN | Plant Information Network |
| PPE | personal protective equipment |
| PT | Pretreatment (Facility) |

| | |
|---|---|
| QA | quality assurance |
| QAPP | *Quality Assurance Project Plan for the Waste Analysis Plan* |
| QC | quality control |
| RCRA | Resource Conservation and Recovery Act of 1976 |
| RDQO | regulatory data quality objectives |
| SBS | submerged bed scrubber |
| SDS | safety data sheet |
| SWTD | Solid Waste Tracking Database |
| TOC | total organic carbon |
| TRU | transuranic |
| TSD | treatment, storage, or disposal |
| WAC | *Washington Administrative Code* |
| WAP | Waste Treatment Plant Waste Analysis Plan |
| WESP | wet electrostatic precipitator |
| WIPP | Waste Isolation Pilot Plant |
| WTP | Hanford Tank Waste Treatment and Immobilization Plant |

# GLOSSARY

This waste analysis plan relies on the definitions of terms as contained in Appendix 3B of the *Hanford Facility Dangerous Waste Permit Application, General Information Portion* (DOE-RL 2013) and other portions of the *WTP Dangerous Waste Permit* (WA7890008967, herein referred to as the DWP) except as supplemented or amended below.

| | |
|---|---|
| Batch | A portion (finite volume) of a waste campaign with similar physical and chemical properties where the required waste processing parameters do not vary. |
| Campaign | Volume of waste feed staged by the Tank Operations Contractor, consisting of multiple batches, that is to be treated using a similar processing strategy. |
| Dangerous Waste | Solid wastes designated in WAC 173-303-070 through 173-303-100 as dangerous, extremely hazardous, or mixed radioactive and dangerous waste. Where information regarding treatment, management, and disposal of the radioactive component of mixed waste has been incorporated it is not incorporated for the purpose of regulating the radiation hazards of such components under this permit (see Condition III.10.A.) |
| Feed acceptance | Feed acceptance criteria are the technical and administrative requirements that a waste must meet in order for it to be accepted at a storage, treatment, or disposal facility (DOE M 435.1-1, Nuclear Waste Policy Act [DOE 2004], adapted from DOE 5820.2A, Radioactive Waste Management). |
| Feed confirmation | The activities the WTP will perform after receiving the waste feed, to confirm that the waste feed received is the same as the waste feed accepted for delivery. |
| High-Level Waste | High-level waste or HLW means: (1) irradiated reactor fuel; (2) liquid wastes resulting from the operation of the first cycle solvent extraction system, or equivalent, and the concentrated wastes from subsequent extraction cycles, or equivalent, in a facility for reprocessing irradiated reactor fuel; or (3) solids into which such liquid wastes have been converted (10 CFR 60.2, *Disposal of High-Level Radioactive Wastes in Geologic Repositories – Definitions*). High-level waste is the highly radioactive waste material resulting from the reprocessing of spent nuclear fuel, including liquid waste produced directly in reprocessing and any solid material derived from such liquid waste that contains fission products in sufficient concentrations; and other highly radioactive material that is determined, consistent with existing law, to require permanent isolation (DOE 2004). |
| Immobilization | The act or process of reducing the mobility of waste constituents to limit their potential for long-term transport in the biosphere and subsequent exposure to humans, animals, and plants. Vitrification is an example of an immobilization process. |
| Immobilized Waste | Liquid waste feed that has had its constituents solidified by processing, such as in a vitrification plant. |
| Incidental Waste | Waste resulting from reprocessing spent nuclear fuel that is determined to be incidental to reprocessing is not high-level waste, and shall be managed under DOE's regulatory authority in accordance with the requirements for transuranic waste or low-activity waste, as appropriate (DOE 2004). |

| | |
|---|---|
| Low-Activity Waste | Low-activity waste is radioactive waste that is not high-level radioactive waste, spent nuclear fuel, transuranic waste, byproduct material (as defined in Section 11e.(2) of 42 USC 2011 et seq., Atomic Energy Act of 1954, or naturally occurring radioactive material (DOE 2004). |
| Mixed Waste | A dangerous, extremely hazardous, or acutely hazardous waste that contains both a nonradioactive hazardous component and, as defined by 10 CFR 20.1003, source, special nuclear, or byproduct material subject to the Atomic Energy Act of 1954 (42 USC 2011 et seq.).<br>Waste that contains both source, special nuclear, or byproduct material subject to the Atomic Energy Act of 1954 (42 USC 2011 et seq.), and a hazardous component subject to the Resource Conservation and Recovery Act (DOE 2004). |
| Radioactive Waste | 10 CFR 60.2 defines radioactive waste as high-level waste and other radioactive materials other than high-level waste that are received for emplacement in a geologic repository. Within the context of this document, radioactive waste also includes secondary waste streams, any garbage, refuse, sludges, and other discarded material, including solid, liquid, semisolid, or contained gaseous material that must be managed for its radioactive content. [DOE 2004] |

## 3A.1 INTRODUCTION

This Waste Analysis Plan (herein referred to as "this WAP") describes the sampling and analysis for dangerous waste constituents for the Hanford Tank Waste Treatment and Immobilization Plant (WTP) to comply with the Washington State Dangerous Waste Regulations contained in WAC 173-303, *Dangerous Waste Regulations*. It was prepared in accordance with the requirements of WAC 173-303-110, *Dangerous Waste Regulations – Sampling and Testing Methods*; WAC 173-303-300, *Dangerous Waste Regulations – General Waste Analysis*; WAC 173-303-806, *Dangerous Waste Regulations – Final Facility Permits*; and permit WA7890008967, *Dangerous Waste Portion of the Hanford Facility Site-wide Resource Conservation and Recovery Act Permit for the Treatment, Storage, and Disposal of Dangerous Waste* (Hanford Facility RCRA Permit – Dangerous Waste Portion) (Ecology 2007) (herein referred to as the DWP). Some nondangerous constituents are also discussed in this WAP, if they support compliance activities or if the discussion provides a more complete description of a particular sampling strategy. In this WAP, the descriptions of the waste feed stored at the Hanford Site double-shell tank (DST) (which includes waste transferred from the single-shell tank system unit) and the planned process streams are based on available chemical and physical information and process knowledge.

### 3A.1.1 Overview

This WAP describes the general requirements for the collection and analysis of waste to be processed by the WTP, and the requirements for characterization of secondary wastes where process knowledge is inadequate to support designation.

The Tank Operations Contractor will characterize the staged DST waste feed in conformance with 24590-WTP-RPT-MGT-04-001, *Regulatory Data Quality Objectives Optimization Report*[1] (herein referred to as "RDQO Optimization Report"). Based on the results, the Tank Operations Contractor will develop a waste profile specific to the staged waste and the planned treatment campaign.

Prior to transferring waste, the WTP will evaluate the waste profile and characterization data for conformance with WTP waste acceptance criteria. The WTP will use this information to ensure the waste feed planned for receipt meets waste acceptance criteria. Analytical results will also be used to determine the appropriate treatment requirements for each campaign. The volume of the waste transferred from the Tank Operations Contractor will also be compared with the volume received at WTP to confirm the waste transfer was completed as planned.

Simplified process flow figures for WTP processes are included in Chapter 4A of the DWP. The waste will be separated into low and high activity fractions, treated, combined with glass-forming chemicals, and melted into a solid glass form in a process known as vitrification.

The vitrified waste will be subject to land disposal restrictions. A site-specific variance under 40 CFR 268.44, *Land Disposal Restrictions – Variance from a Treatment Standard*, that would specify high-level waste vitrification (HLVIT) as the method of treatment for Hanford tank waste processed through the WTP will be submitted (refer to Section 3A.6). The petition would provide the basis to establish the HLVIT treatment standard in lieu of existing concentration-based treatment standards, and would negate the need for sampling the vitrified waste forms. Therefore, sampling and characterization of vitrified waste is not within the scope of this WAP.

[1] The RDQO Optimization Report, Section 9.6, Quality Assurance, specifies compliance with NQA-1-1989; however, 24590-WTP-QAM-QA-06-001, *Quality Assurance Manual*, updates this requirement and requires compliance with NQA-1-2000, *Quality Assurance Requirements for Nuclear Facility Applications*.

Operation of WTP will generate secondary wastes, in solid and liquid form. These wastes will be designated according to available process knowledge, or will be sampled and analyzed as necessary to fully address treatment, storage, or disposal (TSD) unit waste acceptance criteria. Secondary wastes that are not treated by the WTP will be transported by the Tank Operations Contractor to an appropriate TSD unit, subject to that TSD unit's waste acceptance criteria.

Controlled copies of this WAP will be kept by the WTP Project. The Project Document Control manager, or equivalent title, will be responsible for ensuring that controlled copies of this WAP are kept current when revisions are made to this WAP.

### 3A.1.2 Background

Reactor fuel reprocessing is the primary source of waste material stored in the Hanford double-shell and single-shell tanks. Minor amounts of other radioactive and mixed waste (e.g., low-activity and transuranic [TRU] waste) are also included in the DSTs; however, the tank waste is managed as high-level waste (HLW) prior to treatment and vitrification. The waste feed to the WTP will consist of staged transfers of mixed waste from the DST system unit, the TSD unit operated by the Tank Operations Contractor. This waste is composed of sludge, salt cake, and liquids, and is considered mixed waste as defined by WAC 173-303; that is, it contains both radioactive and dangerous waste.

In 10 CFR 72.3, *Licensing Requirements for the Independent Storage of Spent Nuclear Fuel, High-Level Radioactive Waste, and Reactor-Related Greater than Class C Waste – Definitions*, the US Nuclear Regulatory Commission (NRC) defines "high-level radioactive waste" as follows:

> (1) the highly radioactive material resulting from the reprocessing of spent nuclear fuel, including liquid waste produced directly in reprocessing and any solid material derived from such liquid waste that contains fission products in sufficient concentrations; and (2) other highly radioactive material that the Commission, consistent with existing law, determines by rule requires permanent isolation.

Hanford tank waste is consistent with the HLW definition. The treatment of the Hanford tank waste is required under the Hanford Federal Facility Agreement and Consent Order (Tri-Party Agreement) (Ecology, EPA, and DOE 2011), signed by the Washington State Department of Ecology (Ecology), the US Environmental Protection Agency (EPA), and the US Department of Energy (DOE).

In a letter to the DOE Richland Operations Office—titled Classification of Hanford Low-Activity Tank Waste Fraction (NRC 1997)—the NRC documented an agreement with DOE to classify a portion of the Hanford tank waste as "incidental waste" in accordance with the incidental waste classification criteria specified in an earlier letter from the NRC to DOE (NRC 1993). The lower activity portion of the tank waste, referred to as low-activity waste (LAW) feed, generally refers to the supernatant portion of the tank waste. Following pretreatment of the tank waste, waste feed received at the LAW Facility will be classified as low-activity waste and supported by a waste incidental to reprocessing determination. The waste will be vitrified in the LAW Facility. The corresponding immobilized low-activity waste (ILAW) will be managed as mixed waste for disposal onsite.

The higher activity and higher solids portion of the Hanford tank waste is designated as HLW feed. The two different terms describing the tank waste are used because the LAW and HLW fractions of the waste feed are processed differently in the WTP, as described in Section 3A.2 of this WAP.

## 3A.2 WASTE TREATMENT AND IMMOBILIZATION PLANT UNIT DESCRIPTION

The WTP is a waste treatment unit described under the unit-specific portion of the Hanford Facility RCRA Permit – Dangerous Waste Portion (Ecology 2007). Section XV of the Part A Form presents a plan view of the WTP. This section briefly describes the WTP processes and activities. More detailed process information is provided in Chapter 4 of the DWP. The WTP has been designed to operate under two operating scenarios. In the baseline configuration, DST waste will first be processed through the

WTP Pretreatment (PT) Facility, and then sent on for vitrification at the LAW Facility. Alternately, under a direct feed operating scenario, waste may be sent directly from the Tank Operating Contractor to the LAW facility if the waste meets LAW waste acceptance criteria.

The WTP will commence initial operations by processing waste pretreated by the Tank Operations Contractor under a direct feed option. In this configuration, the LAW Facility and WTP Analytical Laboratory (Lab) will be commissioned to operate while the PT Facility and HLW Facility construction is completed. Direct feed low-activity waste (DFLAW) operations will support processing of Hanford tank waste into glass at the earliest possible date while efforts to complete PT Facility continue. Upon the completion of construction and successful commissioning of the PT and HLW facilities, the WTP will switch to the baseline configuration. The portion of DST waste not subject to direct feed processing (e.g., not pretreated or conditioned before transfer to WTP) will be treated in the baseline configuration with PT, LAW, and HLW facilities. These configurations are independent of one another and will not occur in parallel. Both operating configurations are discussed in this WAP.

Figure 4A-1 of Chapter 4A is a simplified diagram of the treatment process. It shows the relationship between the following:

- Waste feed
- Pretreatment
- LAW vitrification
- HLW vitrification

Plant equipment will include the following:

- Pipelines, tanks, and ancillary equipment
- Evaporation units
- Ultrafiltration units
- Ion exchange columns
- Chemical addition equipment
- LAW and HLW melters
- Service and utility units.
- Container management units
- Storage facilities
- Offgas treatment systems

The pretreatment and vitrification of the waste feed and the management of offgas from these processes are described in the following sections. The applicability of air emissions standards to the WTP is also discussed.

### 3A.2.1 Pretreatment

As-received waste that already meets the vitrification facility's waste acceptance criteria may be sent directly from the DST unit to the LAW Facility, bypassing the PT Facility. Other waste will require pretreatment before it can be vitrified.

Pretreatment will prepare the DST waste feed for vitrification when the WTP is in the baseline configuration. An overview of the pretreatment processes is provided below and illustrated in Figure 4A-2 of Chapter 4A. Descriptions of the feed receipt tanks and pretreatment equipment are provided in Chapter 4 of the DWP.

Pretreatment of the waste feed will consist of the following processes:

- Concentration of the waste feed by evaporation.
- Separation of entrained solids by ultrafiltration.
- Separation of strontium and TRU elements by precipitation and ultrafiltration.
- Separation of cesium in ion exchange units.
- Final concentration by evaporation for the LAW feed.

The following paragraphs provide a description of these processes.

Waste requiring pretreatment will undergo a series of processes to separate the LAW and HLW waste fractions and prepare them for vitrification. After the receipt of the waste feed from the DST system unit, the waste feed evaporator, a forced-circulation vacuum evaporator, will concentrate the waste feed prior to ultrafiltration. Ultrafiltration will remove entrained solids from the concentrated waste feed. The solids will be washed and will either be transferred to the HLW feed or returned to the DST system unit. For certain waste feed, strontium and TRU will be precipitated by adding reagents to the waste feed. The precipitate containing strontium and TRU will be concentrated and washed in the ultrafiltration system before incorporation into the HLW feed.

The liquid separated by ultrafiltration will become the LAW feed. The LAW feed will pass through the cesium ion exchange system to separate cesium from the LAW feed.

The LAW feed leaving the ion exchange units will be concentrated by evaporation in the LAW melter feed evaporator. The operation of the LAW melter feed evaporator will be similar to that of the waste feed evaporator. The pretreated LAW feed will be transferred to the LAW Facility for vitrification into the ILAW glass product.

The captured cesium will be eluted from the ion exchange resin and blended with the HLW feed. The HLW feed will then consist of washed solids, strontium and TRU precipitates for certain feed streams, and the cesium ion exchange products. The blended HLW feed will be transferred to the HLW Facility for vitrification into the immobilized high-level waste (IHLW) glass product.

Condensate from the evaporator offgas streams will be collected and transferred to condensate tanks for discharge to the Liquid Effluent Retention Facility (LERF) or the Effluent Treatment Facility (ETF), or both, for subsequent treatment. Noncondensable gases extracted from the evaporator system will be routed to the pretreatment process tank ventilation offgas treatment system. Refer to Section 3A.2.4.1 for a description of the pretreatment offgas treatment systems.

Details of the PT Facility are provided in Chapter 4 of the DWP.

### 3A.2.2 Vitrification Systems

After pretreatment, LAW feed will be transferred to the LAW Facility, and HLW feed will be transferred to the HLW Facility, for conversion to the immobilized glass product. The vitrification process is the same for the DFLAW configuration, absent the need for treatment at the PT and HLW facilities.

Details of the LAW and HLW facilities and systems are provided in Chapter 4 of the DWP.

#### 3A.2.2.1 Low-Activity Waste Vitrification

The pretreated and concentrated LAW feed exiting the LAW melter feed evaporator or transferred directly from the DST system unit will be combined with necessary glass-forming additives (e.g., silica, alumina, boric acid, and calcium silicate) and reductants. The slurry of waste feed and glass formers will be transferred to the LAW melter feed tanks in a manner to provide a continuous feed to each of the LAW melters. The electric-powered, joule-heated LAW melters will operate in parallel. The temperature of the molten glass in the melters will be approximately 950° C to 1,250° C.

In the melter, the feed components will be converted to their respective oxides and dissolved in the melt, destroyed by the high temperatures, or partitioned to the offgas. As these materials are heated, superheated gases will be released into the melter offgas system. Here, most of the solids entrained in the offgas will be captured and returned to the waste feed stream for treatment. The LAW offgas treatment system will treat the volatile constituents that remain in the offgas. LAW offgas treatment is discussed in Section 3A.2.4.2.

Molten glass will be discharged from the melters to metal containers for cooling, solidification, and storage. The process will yield a durable glass containing the ILAW. The glass will be cooled, and the container will be sealed, decontaminated, and temporarily stored before being transferred to an appropriate Hanford Site TSD unit.

In the DFLAW configuration, condensate from the submerged bed scrubber (SBS), the wet electrostatic precipitator (WESP) drainage, spent caustic scrubber solution, and system flush water will be collected via the LAW Vitrification Facility Radioactive Liquid Waste Disposal (RLD) System. Contents from the RLD-VSL-00005 in the LAW and RLD-VSL-00164 in the Lab will be transferred to the Effluent Management Facility (EMF). The EMF will evaporate, or in the case of the spent caustic scrubber solutions sample, these effluents prior to transfer back to LAW or to the LERF/ETF for subsequent treatment. Refer to Section 3A.2.4.3 for a description of the EMF offgas treatment system.

In the baseline configuration, SBS and WESP condensate will be recycled to PT Facility for concentration with treated LAW and eventual incorporation of residual solids in the ILAW. Refer to Section 3A.2.4.2 for a description of the LAW Facility offgas treatment systems.

#### 3A.2.2.2 High-Level Waste Vitrification

The HLW Facility will receive feed slurry from the HLW pretreatment process. The feed slurry will be combined with necessary glass-forming additives (silica, boric acid, calcium silicate, ferric oxide, and lithium carbonate) and reductants, and will then be fed to the HLW melter(s). The temperature of the molten glass in the HLW melter will be approximately 950° C to 1,250° C.

In the melter(s), feed components will be converted to their respective oxides and dissolved in the melt, destroyed by the high temperatures, or partitioned to the offgas. As these materials are heated, superheated gases, including volatile feed components, will be released into the melter offgas system, where most of the solids entrained in the offgas will be captured and returned to the waste feed stream for treatment. The HLW offgas treatment system will treat the volatile constituents that remain in the offgas. The HLW offgas treatment system is discussed in Section 3A.2.4.4.

Molten glass will be discharged from the HLW melter(s) to metal containers for cooling, solidification, and storage. The process will yield a durable glass containing IHLW. The glass will be cooled and the container sealed, decontaminated, and temporarily stored before being transferred to the Hanford Canister Storage Building unit for storage until final disposal.

The SBS and WESP condensate from the HLW Facility offgas control equipment will be recycled to the PT Facility for concentration with treated LAW and eventual incorporation of residual solids in the ILAW. Refer to Section 3A.2.4.4 for a description of the HLW Facility offgas treatment systems.

### 3A.2.3 Effluent Management Facility

When the WTP is configured for direct waste feed to the LAW Facility, the EMF will support operations in collecting and processing the radioactive liquid effluents from the LAW Facility and Lab to support a LAW Facility design capacity of 30 metric tons of glass per day and a minimum treatment capacity of 21 metric tons of glass per day. An evaporator is used to concentrate liquid effluents from the LAW RLD System and Lab RLD System. The concentrated stream is recycled back to the LAW Facility or back to the DST System. Prior to return to the DST system, the stream may be adjusted to meet the DST waste

acceptance criteria. The EMF will have a nominal lifetime of approximately 40 years. It is designed to work in concert with the Lab and LAW Facility. The EMF contains an evaporator system, nine process vessels, and three supporting reagent storage tanks. All waste streams, including mixed waste (hazardous and radioactive), are identified, minimized, and have designated disposal routes. The facility design accommodates disposal routes, size reduction, encapsulation/packaging, accumulation, staging, surveying, and transfer and export of secondary waste streams.

The EMF dilute effluent transfer line will tie into the PT Facility effluent transfer line upstream of the LERF/ETF interface point. Evaporator condensate, along with LAW and Lab RLD liquids that meet the *Liquid Waste Processing Facilities Waste Acceptance Criteria* (herein referred to as "the LERF/ETF WAC") (CHPRC 2012) will be discharged to the LERF/ETF for subsequent treatment and disposal. The evaporator concentrate (bottoms) will be collected, sampled, chemically adjusted, and batch transferred to the LAW Facility for incorporation into the LAW vitrification process. Excess concentrated effluent or effluent that does not meet the LAW Facility acceptance criteria for incorporation into the vitrification process may be returned to the DST unit. The return line from the EMF to the DST system unit conveys concentrated liquid effluents that meet the DST system unit waste acceptance criteria from the EMF back to the DST system unit for storage.

Details of the EMF are provided in Chapter 4 of the DWP.

### 3A.2.4 Offgas Treatment Systems

The PT Facility, the LAW Facility, the EMF, and the HLW Facility will each have a dedicated offgas treatment system. These systems are described in the following sections. The PT, LAW, and HLW facilities' offgas treatment systems are illustrated in Figure 4A-1 of Chapter 4A. Air emissions are addressed in Section 3A.2.4.5. Details regarding the offgas treatment system components are discussed in Chapter 4 of the DWP.

#### 3A.2.4.1 Pretreatment Facility Offgas

Figure 4A-1 of Chapter 4A illustrates the PT Facility offgas treatment system. The pretreatment offgas from dangerous waste processing equipment will be treated through a high-efficiency mist eliminator (HEME) and high-efficiency particulate air (HEPA) filter, and routed to the PT Facility stack, where it will be monitored and released to the atmosphere.

The pretreatment offgas from vessels will be treated through the following components operating in series:

- Acid gas scrubber
- HEME
- HEPA filter
- Volatile organic compound oxidizer
- Carbon adsorber

The treated pretreatment offgas from vessels will be monitored and released to the atmosphere through the PT Facility stack.

#### 3A.2.4.2 Low-Activity Waste Vitrification Offgas

The LAW melter offgas treatment system will consist of the following components operating in series, as illustrated in Figure 4A-1 of Chapter 4A:

- Film cooler
- SBS
- WESP
- HEPA filter
- Thermal catalytic oxidation unit
- Selective catalytic reduction unit
- Caustic scrubber

The treated LAW offgas will be monitored and released to the atmosphere through the LAW Facility stack.

#### 3A.2.4.3 Effluent Management Facility Offgas

The EMF offgas treatment system will consist of HEPA filtration. The treated EMF offgas will be monitored and released to the atmosphere through the EMF stack.

#### 3A.2.4.4 High Level Waste Vitrification Offgas

The HLW melter offgas treatment system will consist of the following components operating in series, as illustrated in Figure 4A-1 of Chapter 4A:

- Film cooler
- SBS
- WESP
- HEME
- HEPA filter
- Thermal catalytic oxidation unit
- Selective catalytic reduction unit
- Silver mordenite iodine adsorption unit

The treated HLW offgas will be monitored and released to the atmosphere through the HLW Facility stack.

#### 3A.2.4.5 Air Emissions

Emissions from the stacks that vent the WTP processes will be monitored according to the provisions of the *Hanford Air Operating Permit 00-05-006 Renewal 2 - Revision A* (Ecology 2014), *as required by* WAC 173-303-395(2), *Dangerous Waste Regulations – Other General Requirements*. Monitoring and sampling to address air emissions concerns under these permits will not be addressed in this application. However, the applicability of the air emissions requirements found in WAC 173-303 will be evaluated in the following sections. Details of the air emissions control systems for the WTP are provided in Chapter 4 of the DWP.

##### 3A.2.4.5.1 Air Emission Standards for Process Vents (Subpart AA)

WAC 173-303-690, *Dangerous Waste Regulations – Air Emission Standards for Process Vents*, commonly referred to as "Subpart AA," regulates process vents associated with distillation, fractionation, thin-film evaporation, solvent extraction, or air- or steam-stripping operations that manage hazardous wastes with organic concentrations of at least 10 parts per million (ppm) by weight. WAC 173-303-690 incorporates the provisions of 40 CFR 264, Subpart AA, *Standards for Owners and Operators of Hazardous Waste Treatment, Storage, and Disposal Facilities – Air Emission Standards for Process Vents*, by reference. The WTP does not employ any of these listed devices or processes; therefore, the

WTP is not subject to regulation under Subpart AA. Refer to 24590-WTP-RPT-ENV-01-001, Rev 0, *RCRA Subpart AA Applicability*, for the regulatory analysis that resulted in this conclusion.

#### 3A.2.4.5.2 Air Emission Standards for Equipment Leaks (Subpart BB)

WAC 173-303-691, *Dangerous Waste Regulations – Air Emission Standards for Equipment Leaks*, applies to facilities that treat, store, or dispose of hazardous waste, and regulates air emissions from equipment that contains or contacts hazardous wastes with organic concentrations of at least 10 percent by weight (wt%). WAC 173-303-691 incorporates 40 CFR 264, Subpart BB, *Standards for Owners and Operators of Hazardous Waste Treatment, Storage, and Disposal Facilities – Air Emission Standards for Equipment Leaks*, by reference. This provision does not apply to the WTP, because the WTP will not accept wastes with organic concentrations at or above 10 wt%. (refer to Section 3A.3.2). Compliance with this provision will be documented through analysis, as described in Section 3A.3.2.

#### 3A.2.4.5.3 Air Emission Standards for Tanks, Impoundments, and Containers (Subpart CC)

The regulations specified under WAC 173-303-692, *Dangerous Waste Regulations – Air Emission Standards for Tanks, Surface Impoundments, and Containers*, and 40 CFR 264, Subpart CC, *Standards for Owners and Operators of Hazardous Waste Treatment, Storage, and Disposal Facilities – Air Emission Standards for Tanks, Surface Impoundments, and Containers*, incorporated by reference, do not apply to the WTP mixed waste tank systems and containers. These tanks and containers are excluded under WAC 173-303-692(1)(b)(vi) because they qualify as waste management units "…used solely for the management of radioactive dangerous waste in accordance with all applicable regulations under the authority of the Atomic Energy Act and the Nuclear Waste Policy Act." Containers or tanks bearing nonradioactive, dangerous waste (e.g., maintenance and laboratory waste) that are not excluded under WAC 173-303-692(1)(b)(ii) or 40 CFR 264.1082(c), will comply with the container and tank standards specified under 40 CFR Part 264 Subpart CC.

## 3A.3 WASTE ACCEPTANCE

The waste feed to be transferred from the DST system unit to the WTP will undergo several stages of review before acceptance. The Tank Operations Contractor will provide the WTP with a waste profile for the feed campaign staged for transfer to the WTP (the sample will be drawn from a location identified in Figure 4A-1 of Chapter 4A as S1). A waste campaign is a volume of waste feed staged by the Tank Operations Contractor, consisting of multiple batches, that is to be treated using a similar processing strategy. Analytical data on the waste feed provided by the Tank Operations Contractor will be used by the WTP for waste acceptance purposes. During sampling and analysis for waste acceptance, the waste feed will remain within the control and responsibility of the Tank Operations Contractor.

After WTP personnel determine that the analytical results indicate the waste acceptance criteria are met, DOE will be notified and the Tank Operations Contractor will be authorized in writing to transfer the waste feed through double-walled pipes to LAW Concentrate Receipts Vessels (CRV) or PT Facility feed receipt tanks (Waste Feed Receipt Process System, FRP) located inside the WTP. The transfer will be assisted by flush water to clear the transfer lines after a waste transfer. After transfer, the WTP will compare the volume of waste feed and flush water transferred from the DST feed staging tank with the volume received by WTP. The waste transfer is via a closed system with no additions (with the exception of flush water), so volume will be used confirm that the waste feed received corresponds to the waste feed accepted for transfer.

The steps involved in evaluating and accepting the waste feed into the WTP are summarized in the following sections. Also discussed in the following sections is the rationale for the removal of dangerous

waste numbers D001 (ignitable) and D003 (reactive) from the waste feed, and the selection of analytical laboratories.

Dangerous waste will be managed in a way that will preclude adverse reaction or interference with the WTP treatment process.

### 3A.3.1 Waste Feed Acceptance Process

For each waste feed campaign, the waste acceptance process is summarized in Table 3A-1, and is discussed in the remainder of this section.

#### 3A.3.1.1 Waste Feed Profile

The Tank Operations Contractor will complete a profile of the waste feed campaign before making a transfer of a batch to the WTP (a batch is a portion of a waste campaign with similar physical and chemical properties where the required waste processing parameters do not vary). The content and format of the profile will be established prior to the transfer of waste feed. The following are examples of the information that will be provided in the profile:

- General information (e.g., the identification of the source DST tank from which the transfer will be made and the date of the proposed transfer).
- Physical properties of the waste feed (e.g., the proposed volume of each batch transfer and the presence or absence of a separate visible organic layer).
- Historical analytical data (e.g., total organic carbon ([TOC]).
- Dangerous waste information (e.g., the designation of dangerous waste numbers).
- Land Disposal Restriction (LDR) information.

As waste stream disposition requirements are identified, individual waste profiles will be developed in a joint effort between the WTP, Tank Operations Contractor, and the DOE.

#### 3A.3.1.2 Preshipment Review

Analytical information will be obtained for each waste feed campaign as provided by the Tank Operations Contractor. The purpose of the preshipment review is to evaluate the analytical results to ensure compatibility and acceptability of the waste feed before it enters the WTP. If the analytical results indicate the waste meets waste acceptance criteria, then the waste will be accepted for treatment. If the analytical results are outside of the waste acceptance criteria, then the Tank Operations Contractor will be notified that the waste feed does not conform. Actions in response to nonconformance are addressed in Section 3A.3.1.3.

The WTP will perform the preshipment review to ensure the waste acceptance criteria are met, and that sufficient storage capacity exists for the waste feed and subsequent post-transfer flush water. Following successful completion of the preshipment review including the resolution of any nonconformance, a representative of the WTP will notify DOE and Tank Operations Contractor personnel in writing that the WTP is ready for a waste feed transfer. The position title of the WTP representative will be provided prior to the commencement of WTP operations. The two parties will agree on the waste feed transfer date, as well as any other pertinent information.

#### 3A.3.1.3 Nonconformance Action

Confirmatory action (e.g., re-analysis and data review) will be performed for each analytical result that does not initially meet the acceptance criteria presented in Table 3A-2. Re-analysis of a sample that fails an acceptance criterion will consist of two repeat analyses for the failed criteria. If both of the repeat analyses pass, then the sample will be considered to meet that acceptance criteria. If one or both of the repeat analyses fail, the waste will be considered nonconforming. If the waste feed is determined to be

nonconforming, then the WTP, the Tank Operations Contractor, or both, will determine and execute corrective actions necessary to be able to transfer and process the waste feed. Such actions may include:

- Waste feed adjustment (blending) to meet the WAC requirements
- Change acceptance criteria requirements if there is no impact to the WTP design, safety basis, or permit requirements (on a case-by-case basis)

If no feasible alternative is found and the feed cannot be accepted, the following actions will be implemented:

- Transfer to an alternative treatment
- Continued waste storage until an alternative is identified

The nonconformance decisions, corrective actions, supporting data, and the names and titles of the individuals making these decisions will be documented and retained as a quality assurance (QA) record, according to procedures described in Appendix 3B, *Quality Assurance Project Plan for the Waste Analysis Plan* (24590-WTP-RPT-ENV-01-002) (herein referred to as the "QAPP").

#### 3A.3.1.4 Waste Feed Transfer

Waste feed transfer will be coordinated between the DST system unit and the WTP. Prior to waste feed transfer, the WTP will ensure that waste feed transfer systems are operational. These systems include (but are not limited to) to the following:

- Pipeline interstitial leak detection.
- CRV or FRP tank level measurement equipment.
- CRV or FRP tank ventilation.

Once the transfer systems are confirmed as operational, the Tank Operations Contractor will transfer the waste feed to the LAW CRV or PT Facility FRP vessels through a double-walled pipeline. The Tank Operations Contractor will water flush the pipeline after the transfer is complete.

#### 3A.3.1.5 Waste Feed Confirmation

The purpose of confirmation is to ensure that the waste feed received into the WTP is the same waste feed that was accepted for transfer. The method used for confirmation will be a comparison of the volume removed from the DST system unit feed staging tank with the volume received into the LAW CRV or PT Facility FRP vessels. The vessel volume measurement systems for the DST system unit and the WTP are discussed in the following sections. Because the waste transfer is via a closed system with no additions (with the exception of flush water), volume will be used confirm that the waste feed received corresponds to the waste feed accepted for transfer.

##### 3A.3.1.5.1 Confirmation Frequency, Measurement Locations, and Measurement Methods

Volume measurements will be made from the DST system unit feed staging vessel/tank and the LAW CRV or PT Facility FRP vessels for each waste feed transfer. The method for volume measurement at both the DST system unit feed staging vessel/tank, the CRV or FRP vessels will be tank level measurements taken before and after waste feed transfer. The volume is then calculated from the tank level differences, taking into account the volume of the line flush water.

##### 3A.3.1.5.2 Confirmation Volume Reconciliation

The WTP and Tank Operations Contractor will reconcile any differences between the measured waste volume transferred out of the DST staging tank and the measured volume received in the FRP system, including top-off transfers.

### 3A.3.2 Waste Acceptance Criteria

The following sections discuss the specific waste acceptance criteria that will be used for the DST waste feed. Waste feed received into the WTP that meets the waste acceptance criteria will be treated by the WTP. The WTP feed acceptance criteria described in this section are consistent with those provided in the RDQO Optimization Report (24590-WTP-RPT-MGT-04-001). The RDQO Optimization Report describes the constituents of regulatory concern and analytical methods appropriate for the characterization of the waste feed. The RDQO Optimization Report is designed to address the regulatory needs of the WTP. The waste acceptance parameters are as follows:

- Total organic carbon
- Polychlorinated biphenyls (PCB)
- pH
- Compatibility
- Selected metals
- Selected organic compounds
- Selected anions
- Ammonia
- Cyanide

Collection of samples is performed to facilitate contamination control and to minimize sampler exposure. The RDQO Optimization Report specified a minimum 350 g of sludge solids (if present in the tank) and 500 mL of liquid to complete the regulatory compliance testing for each WTP feed tank, however, it is anticipated that 300 mL slurry containing at least 30 g of solids per HLW sample, and 170 mL of supernatant liquid per LAW sample shall be sufficient (CCN 233666, Sample Volume Required for Analyses of Feed Samples - WAC DQO). Per the sampling event requirements described in the RDQO Optimization Report, the specific sample volume and number of samples to be collected are to be specified in the Tank Sampling and Analysis Plan (TSAP) for the corresponding staged feed. The sample material is collected in the field, and then subaliquoted (and centrifuged, if necessary) in the laboratory under controlled conditions to further reduce exposures. For tank waste samples, typically glass bottles with Teflon lined screw caps or polyethylene bottles are used to collect samples. These are then subsampled and stored in screw cap glass vials (for organic analyses) and in polyethylene vials (for elemental and radiochemical analyses) during sample preparation and analyses in the laboratory. Per the guidelines established using the Performance Based Measurement System[2] approach and safe handling procedures required to limit radiological dose, sample sizes may be reduced from those recommended in the cited analyses.

The following analytes shall be sampled and analyzed in waste feed samples to provide data to assess waste feed compliance with waste acceptance criteria. Table 3A-3 provides a summary of the waste analysis parameters, analytical methods, acceptance criteria and a description of action to undertake should a nonconformance occur.

[2] In the Federal Register, EPA defines the *Performance Based Measurement System* as "a set of processes wherein the data quality needs, mandates or limitations of a program or project are specified, and serve as criteria for selecting appropriate methods to meet those needs in a cost-effective manner." (FRL-5903-2, Federal Register Vol. 62, No. 193).

#### 3A.3.2.1 Total Organic Carbon

The waste feed will be analyzed to determine the TOC. The TOC has been chosen for analysis of the waste feed to ensure that the WTP is not required to comply with Subpart BB of WAC 173-303-691. The analytical method is SW-846, *Test Methods for Evaluating Solid Waste, Physical Chemical Methods* (EPA 2014), Method 9060A or Method 415.2 (EPA 1997), using persulfate oxidation. The sample aliquot volume requirements for this analysis are expected to be 3 mL for liquid, and 2 g or less for solids. This method typically measures TOC to levels of about 1 ppm. The criteria for waste acceptance is 10 wt% TOC or less. Method 9060 (EPA 2014) will meet the 1% detection limit, as given in Table3A-2. The solids will be analyzed separately for TOC.

#### 3A.3.2.2 Polychlorinated Biphenyls

Most of the Hanford tank waste contains polychlorinated biphenyls (PCB) at concentrations below 50 ppm. These are regulated under the Toxic Substances Control Act of 1976 (15 USC 2601 et seq.), and codified in 40 CFR 761.61, *Polychlorinated Biphenyls (PCBs) Manufacturing, Processing, Distribution in Commerce, and Use Prohibitions – PCB Remediation Waste*, as PCB remediation waste —agreed upon in the *Framework Agreement for Management of Polychlorinated Biphenyls (PCBs) in Hanford Tank Waste* (Ecology, EPA, and DOE 2000). The waste feed sample aliquots will be analyzed to ensure that the waste feed contains less than 50 ppm PCBs. This acceptance criteria of 50 ppm PCBs may change as a result of the risk-based approval of PCBs in the tank waste that is being prepared jointly by Ecology, EPA, and DOE.

The sample will be separated into solid and liquid phases and analyzed for PCBs by SW-846 Method 8082A (EPA 2014). Modification of the basic extraction procedure given in this method is expected to be needed to decrease the sample size and allow the extraction to be performed in a shielded glovebox. It is anticipated that a sample size of 2 g would be required for solids, and 2 mL for liquids. If any single liquid sample contains more than 5% solids after centrifuging, the liquid and solid will be analyzed separately. Refer to Table 3A-2 for the acceptance criteria.

#### 3A.3.2.3 pH

The measurement of pH will ensure that the waste feed is compatible with the WTP materials of construction and treatment processes. Method 9040C of SW-846 (EPA 2014) will be used to measure pH. The estimated sample size is 5 mL. The decision criteria is greater than pH 7, as presented in Table 3A-2.

#### 3A.3.2.4 Compatibility

The waste feed will be evaluated for compatibility with the residual aqueous waste in the LAW CRV or PT Facility FRP vessels, before being accepted into the WTP. These evaluations will focus on the potential for a waste stream to react in an uncontrolled fashion with another waste (40 CFR 264, Appendix V, *Standards for Owners and Operators of Hazardous Waste Treatment, Storage, and Disposal Facilities* – Examples of Potentially Incompatible Wastes). Although problems associated with co-mingling aqueous waste feeds are not expected, this evaluation will ensure the compatibility of two or more aqueous waste feeds from different DST system unit tanks.

Waste feed compatibility will be evaluated using ASTM D5058-90, *Standard Test Methods for Compatibility of Screening Analysis of Waste*. This evaluation provides three test methods to determine compatibility. Test method A, using a reduced sample volume, will be applied to the proposed DST system unit waste feed and the WTP feed receipt tank residual waste. This method prescribes the mixing of aliquots of the two waste streams and an evaluation of any temperature change of the mixture.

The method also calls for a visual examination to determine whether viscosity has increased. These evaluations will be performed to test for potential incompatibilities that could adversely affect the management of the waste in the WTP.

The recommended sample volume for this test method is 150 to 300 mL. The sample size will be decreased to 10 mL from each waste feed type (supernate and sludge, if present), for a total of 20 mL of the combined waste feeds for waste minimization, and will comply with the as low as reasonably achievable philosophy, referred to as "ALARA."

#### 3A.3.2.5 Metals

The waste feed will be evaluated for toxicity characteristic metals, underlying hazardous constituent metals and metals of interest for potential future delisting of IHLW. Waste feed metals will be determined using Methods 7470A or 7471B of SW-846 (EPA 2014) for mercury and Method 6010D of SW-846 (EPA 2014) for metals other than mercury. The waste feed metals are the following:

- Antimony
- Arsenic
- Barium
- Beryllium
- Cadmium
- Chromium
- Copper
- Lead
- Mercury
- Nickel
- Selenium
- Silver
- Thallium
- Vanadium
- Zinc

The recommended sample size for metals (except mercury) is 3 mL and the recommended sample volume for mercury is 1 mL (or 2 g and 1 g of solids for metals and mercury analysis, respectively).

#### 3A.3.2.6 Organic Chemicals

The waste feed will be evaluated for organics. Three SW-846 (EPA 2014) methods will be used. Method 8270D will be used for analysis of semivolatile compounds; Method 8260B will be used for analysis of volatile compounds; and Method 8081B will be used to measure organochlorine pesticides. The recommended sample size for volatile organic compounds is 10 mL, and the recommended sample size for semivolatile organics and pesticides is 3 mL. These analytical methods are "catch-all methods," meaning the methods are capable of detecting multiple constituents as available in the analytical library. The requested analysis will include the request for reporting of all quantifiable constituents, with the minimum as specified by the analytical method.

#### 3A.3.2.7 Anions

Waste feed will be evaluated for the following anions using Method 9056A of SW-846 (EPA 2014):

- Fluoride
- Chloride
- Nitrite
- Bromide

- Nitrate
- Phosphate
- Sulfate

The recommended sample size for anions analysis is 20 mL of liquid and 20 g of solid.

#### 3A.3.2.8 Ammonia

Waste feed (supernate) will be evaluated for ammonia using EPA Method 350.3 (EPA 1989) or Standard Method 4500-$NH_3$-F (APHA 1992). It is anticipated that 0.5 mL of liquid will be necessary for the analysis. Solids are not analyzed for ammonia.

#### 3A.3.2.9 Cyanide

Waste feed will be evaluated for cyanide using Methods 9012B or 9010C / 9014 of SW-846 (EPA 2014). The recommended sample size for cyanide analysis is 1 mL of liquid and 0.2 g of solid.

### 3A.3.3 Analytical Services

The WTP will contract with other laboratories to provide analytical services, as necessary, based on a review of the ability of each laboratory to provide acceptable data for the types of waste handled by the WTP. The review will include an onsite surveillance of the laboratory facilities, and a review of its documentation. Evaluation of candidate laboratories will be based on the following criteria:

- Licenses or permits issued by the applicable government authority, allowing the laboratory to handle waste samples that contain chemical and radiological components.
- Laboratory accreditation.
- Analytical capacity, including number and type of analytical instruments, sample preparation facilities, and sufficient uncommitted capacity, or a commitment to procure sufficient capacity to handle the sample load.
- Adequate number of qualified technical staff.
- Demonstrated history of performing acceptable analyses.
- Adequate sample tracking system (refer to Section 3A.8.2).
- A demonstrated QA program and participation in performance evaluation.

### 3A.3.4 Waste Feed Designation

Waste numbers described in the *DST System / 204-AR Waste Unloading Station – Dangerous Waste Permit Application, Part A Form* (Ecology 2009) are applicable to the waste feed. These dangerous waste numbers are listed in Table 3A-2.

The waste feed will carry the numbers for ignitable (D001) and reactive (D003) waste. However, based on past process knowledge,—which includes the age, temperature, history, and chemical composition of the waste feed stored in the DST system unit—it is not expected to exhibit the characteristics of ignitability or reactivity found in WAC 173-303-090, *Dangerous Waste Regulations – Dangerous Waste Characteristics*. After the waste feed has been received into the PT Facility, this process knowledge will be used to remove the dangerous waste number for ignitability and reactivity.

When the WTP is configured for DFLAW operations, the Tank Operations Contractor will ensure that LAW feed does not carry waste codes D001 and D003 when transferred to the LAW Facility. As previously discussed, if the waste is pretreated or conditioned to meet LAW Facility acceptance criteria before transfer to WTP, which will include not having the D001 and D003 codes, the waste may be transferred directly to the LAW Facility under the DFLAW configuration. The following discussions only apply to waste feed to be transferred to the PT Facility in the baseline configuration.

Precautions taken to prevent accidental ignition or reaction of ignitable or reactive waste will be in accordance with WAC 173-303-395(1) (a) through (d), and will be documented in the WTP operating record in accordance with WAC 173-303-395(1)(c), as discussed in the QAPP. Tank inspection is addressed in Chapter 6 of the DWP.

#### 3A.3.4.1 Ignitable Waste

Four properties of a waste found in WAC 173-303-090(5)(a)(i through iv) are used to determine whether a waste exhibits the characteristic of ignitability. These four properties are listed in Table 3A-4, and are discussed below.

WAC 173-303-090(5)(a)(i) states that waste is ignitable if the sample waste "…is a liquid, other than an aqueous solution containing less than 24 percent alcohol by volume, and has a flash point less than 60 degrees C (140 degrees F)…." Report HNF-SD-WM-SAR-067, *Tank Waste Remediation System Final Safety Analysis Report* (DOE-RL 1999), identifies 241-C-103 as the only tank, at this time, that contains a separate organic solvent phase. The flash point of the separate organic solvent phase on tank 241-C-103 was determined to be 118 ºC in report PNL-9403, *Waste Tank Organic Safety Project: Analysis of Liquid Samples from Hanford Waste Tank 241-C-103* (PNL 1994). This flash point is well above the regulatory threshold of 60 ºC for determining the characteristic of ignitability and represents a worst-case flash point for the liquid portion of the waste feed. Because the liquid portion of the waste feed is aqueous and contains a maximum of 10 wt% TOC, the flash point test will not be performed on the aqueous waste feed.

The WAC 173-303-090(5)(a)(ii) property of ignitability pertains to material that is not a liquid. Portions of the Hanford tank waste are in a solid (crust and salt cake) and semi-solid (sludge) form. Process knowledge indicates that this property of ignitability does not apply to the tank waste. Throughout the history of the Tank Farms—according to memorandum 82331-90-313, *Double-Shell Tank Waste Designation* (Westinghouse 1990)—there has been no evidence of the solid or semisolid portions of the tank waste "…causing fire through friction, absorption of moisture or spontaneous chemical changes and, when ignited, burns so vigorously and persistently that it creates a hazard" (WAC 173-303-090(5)(a)(ii)).

WAC 173-303-090(5)(a)(iii) pertains to compressed gas. This definition does not apply because the Hanford tank waste is not a compressed gas.

WAC 173-303-090(5)(a)(iv) states that waste is an oxidizer if it "…yields oxygen readily to stimulate the combustion of organic matter." According to 49 CFR 173.127, *Shippers – General Requirements for Shipments and Packagings – Class 5, Division 5.1 – Definition and Assignment of Packing Groups*, an oxidizer is defined as "…a material that may, generally by yielding oxygen, cause or enhance the combustion of other materials." Nitrate and nitrite salts are present in the waste feed (Westinghouse 1990) and can yield oxygen. However, report HNF-4240, *Organic Solvent Topical Report* (CH2M Hill 2000), determined that the nitrate and nitrite in the DST waste will not cause or enhance the combustion of other materials. Thus, the DST waste does not meet the definition of an oxidizer. Report HNF-4240 was independently reviewed and accepted by the Chemical Reactions Subpanel of the Tanks Advisory Panel, the Defense Nuclear Facilities Safety Board staff, and the Oregon Office of Energy—which is documented in memorandum 00-SHD-066, *Closure of the Organic Solvent Safety Issue and Removal of the Organic Solvent Tanks from the Watchlist* (DOE-ORP 2000).

49 CFR 173.128, *Shippers – General Requirements for Shipments and Packagings – Class 5, Division 5.2 – Definitions and Types*, defines organic peroxides and is not applicable to the waste feed.

The dangerous waste number D001 for ignitability will be removed from the waste feed after it is received into the PT Facility, based upon the previous discussions of process knowledge. Waste feed accepted in the DFLAW operations configuration will not carry the D001 code. The Tank Operations Contractor will ensure that treated LAW feed does not carry waste code D001 (ignitability) when transferred to the LAW Facility

#### 3A.3.4.2 Reactive Waste

WAC 173-303-090(7)(a)(i through viii) lists eight properties of a waste that would cause it to be designated as a reactive waste. The eight properties are listed in Table 3A-5 and are discussed in the following paragraphs.

WAC 173-303-090(7)(a)(i) describes a waste that is unstable and will undergo violent change. The Hanford tank waste has not exhibited a violent change during the history of the Tank Farms. Differential thermal analysis or differential scanning calorimeter analysis has been performed on the tank waste. These tests have shown that the waste does not react under thermal stress (Westinghouse 1990).

WAC 173-303-090(7)(a)(ii), (iii), and (iv) involves waste that, when mixed with water, produces hazardous reactions, or generates toxic gases, vapors, or fumes. Because the Hanford tank waste is already a water solution, it does not meet the following definitions: (ii) "It reacts violently with water," (iii) "It forms potentially explosive mixtures with water," or (iv) "When mixed with water, it generates toxic gases, vapors or fumes in a quantity sufficient to present a danger to human health or the environment."

Hydrogen, ammonia, oxides of nitrogen, and methane are generated in the Hanford waste tanks. These gases are generated primarily from the radiolytic decomposition of the waste and are not a result of mixing with water —according to report HNF-SF-1193, Rev 1, *Flammable Gas Project Topical Report* (PNNL 1996). Nevertheless, flammable gases produced by the waste's radiolytic decomposition and, to a lesser degree, thermolytic decomposition, will be managed at the WTP through ventilation of the vessels that contain the waste feed.

WAC 173-303-090(7)(a)(v) concerns the generation of toxic gases, vapors, or fumes when a cyanide- or sulfide-bearing waste is exposed to pH conditions between 2 and 12.5, in a quantity sufficient to present a danger to human health or the environment. Hydrogen cyanide and hydrogen sulfide are the gases that would be generated from cyanide- or sulfide-bearing waste when exposed to acidic conditions. In 1985, the EPA published guidance for determining regulated thresholds for these gases as 250 mg/kg of waste for hydrogen cyanide and 500 mg/kg of waste for hydrogen sulfide. Although these numerical thresholds were rescinded by the EPA via memorandum *Withdrawal of Cyanide and Sulfide Reactivity Guidance* (EPA 1998), they are still useful as benchmarks for determining the characteristic of reactivity and are still accepted by Ecology.

Thirteen tanks have been investigated by the Pacific Northwest National Laboratory under CH2M Hill Hanford Group, Inc. (Project Number 41503) for their potential to generate these gases at a pH between 2 and 12.5. Included in these thirteen tanks are the tanks scheduled for vitrification during the first 10 years of WTP operation. This report researched the analytical data for the concentrations of cyanide and sulfide in the supernatant and solids in the tanks, using the best basis inventory on the Tank Waste Information Network System database current to November 2000 (Lockheed Martin 1999). Analytical data for cyanide was available, but no data was available for sulfide because there is no history of sulfide addition to the Tank Farms. Consequently, the author used total sulfur and sulfate concentration values for the evaluation. Standard chemistry principles were used to calculate the potential generation of hydrogen cyanide and hydrogen sulfide in acidic conditions. This investigation determined that hydrogen cyanide and hydrogen sulfide would not be generated at the respective benchmark levels of 250 and 500 mg/kg of waste for these tanks. Thus the waste feed contained in tanks scheduled for the first 10 years of WTP operation is not considered to be sulfide- or cyanide-bearing waste.

WAC 173-303-090(7)(a)(vi), (vii), and (viii) is concerned with waste that will detonate or explode. Process knowledge and history indicate that the Hanford tank waste does not detonate or explode. As mentioned previously, differential thermal analysis or differential scanning calorimeter analysis has been performed on the tank waste, showing that it does not react under thermal stress (Westinghouse 1990).

Finally, the tank waste is not regulated as an explosive in 49 CFR 173.50, *Shippers – General Requirements for Shipments and Packagings – Class 1 – Definitions*.

The dangerous waste number D003 for reactivity will be removed from the waste feed based after it is received into the PT Facility, upon the previous discussions of process knowledge. Waste feed accepted in the DFLAW operations configuration will not carry the D003 code. The Tank Operations Contractor will ensure that treated LAW feed does not carry waste code D003 (reactivity) when transferred to the LAW Facility.

## 3A.4 WASTE FEED CHARACTERIZATION

This section describes the general characterization of waste to support assessment of applicable waste acceptance criteria. Prior to the transfer of DST waste feed, the Tank Operations Contractor will characterize the waste feed in conformance with the RDQO Optimization Report (24590-WTP-RPT-MGT-04-001). The data quality objective process is an ongoing activity and may periodically affect the set of analytes and analytical methods. To date, the RDQO Optimization Report has been the basis for the selection of the of the waste acceptance criteria presented in Section 3A.3.2. The subsections below identify corresponding sections of the RDQO Optimization Report.

### 3A.4.1 Sampling Methods and Sampling Frequency

The samples collected for characterization of the waste feed staged for transfer to the WTP will be collected as described in Section 9 of the RDQO Optimization Report (24590-WTP-RPT-MGT-04-001). A minimum of one sample will be collected from the waste feed tank for characterization of the waste stored in that tank.

### 3A.4.2 Sample Preservation, Storage, and Holding Times

Sample preservation, storage, and holding times for the samples collect to support characterization of the DST waste feed are discussed in Section 9 of the RDQO Optimization Report (24590-WTP-RPT-MGT-04-001).

### 3A.4.3 Selection of Analytes

The analytes for characterization of the waste feed have been determined as a result of the RDQO Optimization Report (24590-WTP-RPT-MGT-04-001). The analyte list will be finalized after completing the environmental risk assessment, currently under development. These activities are scheduled to be completed prior to the commencement of cold operations, and will be used to verify the set of analytes described in Section 3A.4 as appropriate for characterization of the waste feed.

### 3A.4.4 Selection of Analytical Methods

The analytical methods that will be used to obtain the necessary data for characterizing the DST waste feed are addressed in Section 9.8 of the RDQO Optimization Report (24590-WTP-RPT-MGT-04-001).

### 3A.4.5 Quality Assurance and Quality Control

The QA and quality control (QC) for waste feed characterization are addressed in Sections 9.6 and 9.8 of the RDQO Optimization Report[3] (24590-WTP-RPT-MGT-04-001). Additional QA and QC requirements for sampling and analysis in support of the characterization of the waste feed and the characterization of secondary waste streams are provided in Appendix 3B of this permit

[3] The RDQO Optimization Report, Section 9.6 "Quality Assurance" specifies compliance with NQA-1-1989, however, the WTP *Quality Assurance Manual* (24590-WTP-QAM-QA-06-001) updates this requirement and requires compliance with NQA-1-2000 (ASME 2000).

## 3A.5 SECONDARY WASTE STREAMS

In addition to the vitrified glass product, the PT Facility's pretreatment processes and the Lab, EMF, LAW and HLW facilities' vitrification processes will generate a variety of solid, liquid, and gaseous waste streams. Some of these waste streams include waste derived from the incoming feed from the DST system unit. Other wastes include spent materials used in processing the waste feed, such as rinsate and scrubber solutions that come into contact with the waste feed or its derivatives, and contaminated equipment. General facility operations and maintenance activities will also generate dangerous waste.

This section describes the secondary waste streams generated by the WTP, including characterization of secondary waste, the associated sampling and analysis activities, and the ultimate treatment, storage, or disposal of regulated waste. Air emissions subject to regulation, commonly referred to as Subparts AA, BB, and CC, are discussed in Section 3A.2.4.5.1. Other regulated air emissions are addressed under the *Clean Air Act of 1990* (42 USC 7401 et seq.) and the *Washington State Clean Air Act of 1967* (RCW 70.94 et seq.) permits and are not included in the following discussions.

The WTP's primary mission is to vitrify the Hanford tank waste. This process will also generate a variety of secondary waste streams that must be properly managed. The management of secondary waste streams that will be regulated as dangerous waste is discussed in this section.

Secondary waste streams that will be transferred back to the DST system unit will be designated with waste numbers based upon process knowledge. Waste transferred to the DST system unit will meet the DST waste acceptance criteria.

Secondary waste streams are divided into solid waste streams (discussed in Section 3A.5.1) and liquid waste streams (discussed in Section 3A.5.2). Dangerous waste streams generated within the WTP will meet the waste acceptance criteria or protocols established by the receiving TSD facilities' permits and operating authority. This document does not outline the details of sampling and analyzing each waste stream because each TSD receiving waste may update its waste acceptance criteria and thus alter the required waste analyses.

The following general information related to waste classification applies to solid and liquid secondary waste streams:

- Normally, waste streams will be designated using process knowledge. Acceptable process knowledge includes:
  - Historical analytical data
  - Mass balance from a controlled process with a specified output for a specified input
  - Safety data sheets (SDS)
  - Analytical data on the waste from a similar process
  - For mixed waste, process knowledge could include information from surrogate material (that is, a non-radioactive waste generated from an analogous activity or process)
- The listed waste numbers F001 through F005 will follow the secondary waste if the secondary waste is derived from the waste feed. F039 waste was never placed in the DST system unit, and will not be designated to secondary waste. If the DST system unit receives F039 waste in the future, F039 will then be designated to secondary waste that contacts the DST waste feed.
- Secondary wastes not derived from the waste feed (e.g., Lab and maintenance waste) will be characterized and designated with the appropriate EPA hazardous waste numbers and Washington State dangerous waste numbers, and managed accordingly.
- If analyses are required for determining waste numbers for a secondary waste, laboratory procedures will be prepared using applicable SW-846 methods (EPA 2014). Analytical procedures will be revised, as appropriate, if SW-846 methods are revised.

- Documentation of the process knowledge or analytical data used to designate the waste numbers will be maintained in the WTP operating record. Documentation is discussed in Section 3A.7 of this report, and waste tracking is presented in Section 3A.8.
- Characteristic of ignitability (D001) and reactivity (D003) waste numbers, if applicable, can be removed after testing or the application of process knowledge, as appropriate.

### 3A.5.1 Secondary Solid Waste Streams

Solid waste will be generated from WTP operations and includes a wide variety of wastes—such as waste derived from routine maintenance activities, nonroutine maintenance activities, and daily operating activities. The following sections describe the various mixed and variable solid waste types to be generated. Refer to the WAP glossary for additional details on the specific waste types.

#### 3A.5.1.1 Solid Waste Designated as Mixed Waste

Solid waste streams that will come into contact with the waste feed during any stage of the treatment processes will be designated as mixed waste by process knowledge. These secondary waste streams are listed in Table 3A-6. EPA hazardous waste numbers and Washington State dangerous waste numbers will be assigned to these mixed waste streams, based on the characterization of the waste feed. Each waste stream discussed below will meet the waste acceptance criteria of the receiving facility. A discussion of each of these mixed waste streams is provided.

Out-of-Service Melters

It is anticipated that melters will require replacement at some point, due to the harsh conditions of the vitrification process. When the end of a melter's operational life is reached, residual molten glass will be removed as immobilized product, as much as is practical. The melter will be allowed to cool and then will be disconnected.

The LAW melters will be provided to the disposal facilities in a shielded and seal-welded melter package. The melters may require a LDR treatability variance to allow land disposal at the Hanford Site. The Tank Operations Contractor, with the Plateau Remediation Contractor, has been tasked with developing a disposal path for the WTP LAW melters. A determination has yet to be made if the LAW melter will require additional treatment at the disposal facility. Due to the extreme weight of a spent or failed LAW melter, treatment (if needed) would have to be completed at or near the disposal site. If treatment will occur at the disposal facility, the appropriate permit modifications will be required to include this activity.

Current data indicate that the concentration of TRU constituents will cause some HLW melters to be designated as a TRU waste. The LDR treatment standards for the HLW melter are met by the macroencapsulation of the melter in an 8-inch thick welded carbon steel shielded overpack. The Tank Operations Contractor, with the Plateau Remediation Contractor, has been tasked with developing a disposal path for the WTP HLW melters. The HLW melters may require an LDR treatability variance to allow land disposal at the Waste Isolation Pilot Plant (WIPP) or another offsite facility. If future waste characterization data validates that some HLW melters will be TRU waste, permitting and approval for long-term storage of this TRU waste at the Central Waste Complex will then be needed. Facilities to grout, size reduce, and package the melters to meet the WIPP waste acceptance criteria or a yet to be established HLW disposal facility do not exist.

High-Level Waste Glass Residue

The disposal path for HLW glass residue that may be removed from an out-of-service HLW melter will be determined case-by-case. Final disposal will be based on the radionuclide content and dangerous characteristics of the glass residue. It is anticipated that this secondary waste will be classified as remote-handled, mixed low-activity waste. These wastes will be packaged for transportation in shielded transportation casks and treated for disposal at a commercial vendor to meet the LDR.

Melter Components

Melters will be fitted with various ancillary equipment (e.g., bubbler assemblies, heating elements, and thermocouples) that will require periodic replacement. The ancillary equipment will be removed, designated by process knowledge as mixed waste, and packaged and transferred to an appropriate TSD unit. It is anticipated that LAW melter components will be contact-handled, mixed low-activity waste; the HLW melter components will be remote-handled, mixed low-activity waste. Both these secondary waste streams will be packaged for transportation and treated for disposal at a commercial vendor to meet the LDR.

Offgas Treatment System Components

HEMEs, HEPA filters, and silver mordenite canisters will be components of the offgas treatment system incorporated to remove contaminants from the offgas streams prior to discharge. These components will periodically be replaced to maintain treatment efficiency. They will be designated by process knowledge, packaged, and transferred to an appropriate TSD unit.

Spent Carbon and Catalyst from Offgas Treatment

Spent carbon and catalyst from offgas treatment will periodically be replaced to maintain treatment efficiency. These materials will be designated by process knowledge and managed as mixed waste. They will be removed from their respective equipment, packaged, and transferred to an appropriate TSD unit.

Spent Ion Exchange Resins

Ion exchange resins used for cesium removal will periodically be replaced to maintain treatment efficiency. These resins will be designated by process knowledge and managed as mixed waste. They will be eluted, removed from their respective columns, dried and packaged in high-integrity containers, and finally transferred to an appropriate TSD unit.

Spent Ultrafilters

Ultrafilters may be periodically replaced to maintain treatment efficiency. They will be designated as mixed waste by process knowledge, packaged, and transferred to an appropriate TSD unit.

Out-of-Service Equipment

Ancillary equipment (e.g., pumps, valves, piping, motors, and electrical equipment) no longer fit for use, will be removed from service and designated as out-of-service equipment. Out-of-service equipment that contacted the waste feed will be designated by process knowledge, packaged, and transferred to an appropriate TSD unit.

Entrained Solids

Entrained solids will be generated by pretreating the LAW feed via ultrafiltration. The separated solids will be washed and again concentrated via ultrafiltration. The entrained solids will either be incorporated into the IHLW or the ILAW or returned to the DST system unit in the form of a slurry via pipeline.

#### 3A.5.1.2 Variable Solid Waste Streams

The waste streams listed in Table 3A-7 can be radioactive waste, dangerous waste, or mixed waste, depending on the source of the waste and whether it had contact with the waste feed. The EPA hazardous waste numbers and Washington State dangerous waste numbers will be assigned to these waste streams, based on the designation of the waste by process knowledge. In addition to the waste streams listed in Table 3A-7, raw process materials and chemicals will be brought onto the WTP site. Some of these substances may subsequently become waste and will require characterization for proper waste management. The SDS provides the information necessary to properly characterize and designate a substance when it becomes a waste. Vendors will be required to provide SDS for substances that will be brought onto the WTP site, and an SDS file will be maintained by the WTP. Examples of these types of

substances are process and laboratory chemicals, lubricants (e.g., oils and greases), and maintenance products (e.g., paints, solvents, and adhesives).

Subcontractors to the WTP will be required to have an SDS for the substances that they bring onto the WTP site. Subcontractors will also be required to remove the residuals of any substance that they bring onto the WTP site, including wastes generated (e.g., wipes, paintbrushes, and personal protective equipment [PPE]). Subcontractors may make arrangements with another waste management organization to manage the generated wastes.

#### Laboratory Waste

Non-wastewater laboratory waste derived from the waste feed will be designated as mixed waste by process knowledge, packaged, and transferred to an appropriate TSD unit. Other non-wastewater laboratory wastes (e.g., off-specification laboratory chemicals and spent or unused simulant) will be designated by process knowledge and managed accordingly. These wastes will be packaged and disposed of at an appropriate TSD unit.

#### Personal Protective Equipment

Personnel performing certain tasks such as facility maintenance, treatment process operations, and waste packaging activities, may wear PPE. Used PPE may be returned to the vendor for cleaning and refurbishment. Used PPE that cannot be recycled to the vendor and has had contact with waste feed or other sources of radiological contamination will be designated as radioactive or mixed waste by process knowledge, packaged, and transferred to an appropriate TSD unit. The PPE nonradioactive waste designated as dangerous waste by process knowledge will be packaged and disposed of at an appropriate TSD unit.

#### Maintenance Waste

Maintenance wastes (e.g., paints, lubricants, cleaning solvents, adhesives, and off-specification chemicals) will be generated at the WTP. Maintenance waste that comes in direct contact with waste feed will be designated as mixed waste. Waste contaminated by indirect contact will be designated based on process knowledge as radioactive waste or mixed waste as appropriate, and transferred to an appropriate TSD unit. Those not derived from the waste feed and designated as dangerous waste by process knowledge will be packaged as and disposed of at an appropriate TSD unit.

### 3A.5.2 Liquid Waste Streams

The dangerous and mixed liquid waste streams generated at the WTP that cannot be incorporated back into the treatment process (recycled) will be managed in accordance with the LERF/ETF WAC (CHPRC 2012). The LERF or the ETF, or both, will receive hazardous aqueous waste generated at WTP. The waste will meet the acceptance criteria as outlined in the LERF/ETF WAC. The LERF and ETF allow process knowledge to be used in lieu of some analyses in instances where process knowledge is adequate, and a LERF or ETF representative will work with a WTP representative to identify the waste acceptance criteria and analyses appropriate for liquid waste characterization.

Aqueous waste streams listed in Table 3A-8 will be collected in an effluent collection tank. Should sampling be required, the sample will be drawn from a location identified in Figure 4A-1 of Chapter 4A as S2. Samples will be taken from the effluent collection tank by a computer-controlled autosampling system at the PT Facility or manually sampled. Autosampling of waste streams is described in Section 7.2.1 of the ASTM D6232-98, *Standard Guide for Selection of Sampling Equipment for Waste and Contaminated Media Data Collection Activities*. The effluent collection tank will be stirred during sample collection to provide representative samples.

When the WTP is configured for the DFLAW configuration, samples of condensate and liquid effluent may be taken from the appropriate EMF vessel or the effluent transfer pipeline after additions for corrosion control, and analyzed to verify the effluent meets the LERF/ETF WAC. Additional sampling

and analysis of EMF effluent will be performed in the event of a process upset, change in effluent source, compliance purposes, data loss, or as agreed to by WTP and LERF or ETF.

Disposable sampling equipment will eliminate the need for equipment decontamination after use. If the use of disposable equipment is not practical, the sampling equipment will be decontaminated before and following each sample event.

A discussion of each aqueous waste stream is presented below.

Aqueous Waste from Processes

Table 3A-8 lists the aqueous waste streams that will be generated by the WTP from processing the DST waste feed. The analytical laboratory will also generate aqueous waste. These waste streams will contain both radioactive and dangerous waste components and will be similar to the process condensate stream described in the DOE/RL-90-42, *242-A Evaporator Dangerous Waste Permit Application* (DOE-RL 1997). When WTP is configured for waste feed to the PT Facility, these aqueous waste streams will be piped to the effluent collection tank prior to transfer to the LERF or ETF by underground pipeline for treatment.

Plant Wastewater

Wastewater will be generated primarily from decontamination and wash-down activities in the WTP. The wastewater will be designated as mixed waste by process knowledge, since it will contain dilute waste feed constituents. When WTP is configured for waste feed to the PT Facility, wastewater will also be piped to the effluent collection tank prior to transfer to the LERF or ETF by underground pipeline for treatment.

EMF Effluents

Evaporator condensate from the EMF is transferred to the LERF or ETF by underground pipeline for treatment. Evaporator concentrate is typically recycled back to the LAW Facility or a pretreat/conditioning facility operated by the Tank Farms Contractor for eventual incorporation into ILAW, but can be returned to the DST system unit for storage in the unlikely event that the waste cannot be recycled. An alternate contingency, the effluent can be transferred by tanker truck to the appropriate disposal facility.

### 3A.5.3 Treatment, Storage, or Disposal Unit Waste Acceptance Criteria

Solid waste streams designated as dangerous or mixed waste will be transferred to Hanford Site TSD units in accordance with the current *Hanford Site Solid Waste Acceptance Criteria* (CHPRC 2011). The WTP will meet the unit-specific waste acceptance criteria for the receiving TSD unit. Solid wastes stored at the WTP will meet the acceptance criteria of the specific WTP storage area.

## 3A.6 LAND DISPOSAL RESTRICTIONS EVALUATION FOR IMMOBILIZED WASTE

This section describes the approach for addressing the LDR program requirements applicable to the land disposal of ILAW and IHLW.

The LDRs are codified in WAC 173-303-140, *Dangerous Waste Regulations – Land Disposal Restrictions*, which incorporates 40 CFR 268, *Land Disposal Restrictions*, by reference. In 40 CFR 268.40, *Land Disposal Restrictions – Applicability of Treatment Standards*, the treatment standards for land disposal of a dangerous waste are identified as follows:

A prohibited waste identified in the table “Treatment Standards for Hazardous Wastes” may be land disposed only if it meets the requirements found in the table. For each waste, the table identifies one of three types of treatment standard requirements:

(1) All hazardous constituents in the waste or in the treatment residue must be at or below the values found in the table for that waste ("total waste standards"); or

(2) The hazardous constituents in the extract of the waste or in the extract of the treatment residue must be at or below the values found in the table ("waste extract standards"); or

(3) The waste must be treated using the technology specified in the table ("technology standard"), which are described in detail in § 268.42, Table 1 – Technology Codes and Description of Technology-Based Standards.

The total waste standards and waste extract standards require repeated sampling and analysis of the waste to demonstrate that the dangerous constituents in the waste are at or below the values found in the table. These standards are appropriate for a limited dangerous waste stream, but are not a good choice for a mixed waste stream of extended duration because of repeated human exposure during sampling and analysis.

Table 1 in 40 CFR 268.42, *Land Disposal Restrictions – Treatment Standards Expressed as Specified Technologies*, includes the technology-based standard "HLVIT" (high-level vitrification). At the request of DOE, the HLVIT treatment technology was promulgated by the EPA to treat the tank waste at the Savannah River Site (refer to *Land Disposal Restrictions for Third Third Scheduled Wastes; Rule* [EPA 1990]). According to the table in 40 CFR 268.40 regarding treatment standards for hazardous wastes, HLVIT is the technology for the treatment of the following dangerous waste numbers from radioactive high-level wastes generated during the reprocessing of fuel rods:

| | |
|---|---|
| D002 | Corrosivity (pH) |
| D004 | Arsenic |
| D005 | Barium |
| D006 | Cadmium |
| D007 | Chromium (total) |
| D008 | Lead |
| D009 | Mercury |
| D010 | Selenium |
| D011 | Silver |

Similar to the treatment of the Savannah River Site tank waste, the treatment of the Hanford tank waste will require many years of WTP operation. Rather than repeated sampling and analysis of the waste to demonstrate LDR using the total waste standard or the waste extract standard, it would be appropriate to treat the Hanford tank waste to a specific treatment standard (e.g., the HLVIT technology-based standard described above for the Savannah River Site tank waste). Consequently, the WTP is preparing a petition to the EPA and Ecology to establish a new treatment standard that will be specific to the Hanford tank waste. The new treatment standard would specify vitrification as the land disposal treatment standard for tank waste for the characteristic and listed waste numbers applicable to the Hanford tank waste.

As required by 40 CFR 268.44, the petition will be submitted in accordance with the procedures specified in 40 CFR 260.20, *Hazardous Waste Management System – General*. Report RPT-W375LV-EN00002, *Approach to Immobilized Hanford Tank Waste Land Disposal Restrictions Compliance*, describes the petition process. The negotiated petition will be published in the Federal Register for public comment. After successful resolution of public comments, the EPA would promulgate a final rule establishing the treatment standard. The Hanford tank waste would then meet LDR through treatment by the promulgated treatment standard.

## 3A.7 WASTE TRANSFER DOCUMENTATION SYSTEM

The WTP is part of the Hanford Site because it will operate under the same EPA identification (ID) number as the other Hanford Site facilities. The WTP will prepare transportation documentation for the transfer of dangerous or mixed waste to a Hanford TSD unit according to the requirements of Condition II.Q of the Hanford Facility RCRA Permit – Dangerous Waste Portion (Ecology 2007). Condition II.Q.1 exempts waste that will be transported by rail or pipeline unless required by unit-specific conditions. This exemption will apply to waste feed transferred to and from the WTP by underground pipeline, and to effluent transferred to the LERF, ETF, a LAW pretreat/conditioning facility operated by the Tank Farms Contractor, or Tank Farms via underground pipeline.

Waste transfer documentation and supporting process knowledge will be considered QA records and managed in accordance with the requirements for document control, as outlined in the QAPP. This documentation will specify the identity of the receiver and confirm that the receiver accepted the waste. WTP personnel and the waste receiver's acceptance personnel will date and sign the waste transfer papers. Electronic waste transfer documentation may be used, as appropriate.

Solid and liquid waste transfers and LDR notifications are discussed in the following sections.

### 3A.7.1 Solid Waste Transfer

The WTP, as a waste generator, will provide documentation with each container transferred to the Tank Operations Contractor to support waste designation and waste shipping of regulated solid waste to a Hanford Site TSD unit in accordance with the current *Hanford Site Solid Waste Acceptance Criteria* (CHPRC 2011). Regulated solid waste transferred from the WTP to the Tank Operations Contractor for treatment and final disposal at a Hanford Site TSD unit will meet the unit-specific waste acceptance criteria for the receiving TSD unit. Regulated waste shipped to an offsite TSD unit will be accompanied by a manifest, according to WAC 173-303-180, *Dangerous Waste Regulations – Manifest*.

### 3A.7.2 Liquid Waste Transfer

Aqueous waste transfers from the WTP to the LERF or ETF will comply with the current LERF/ETF WAC (CHPRC 2012). The WTP will perform online monitoring of the effluent flow rate, effluent radiation, pH, and conductivity, and the data will be transmitted to the LERF Instrument Building. The real-time data will be transmitted over a dedicated line. Stop-transfer control and leak detection circuits will be integrated with the effluent transfer system.

Aqueous waste transfers from the WTP to the Tank Farms will meet the Tank Farms' waste acceptance criteria (under development).

A waste profile sheet will accompany aqueous waste transfers. As waste stream disposition requirements are identified, individual waste profiles will be developed in a joint effort between the WTP, Tank Operations Contractor, and the DOE.

### 3A.7.3 Land Disposal Restrictions Notification and Certification

The WTP will provide LDR notification and certification of WTP-shipped waste that contains LDR constituents above the treatment standards listed in 40 CFR 268.40. The information will be included with transfer documents to the receiving TSD facility for solid waste and liquid waste transfers. The receiving TSD will generate a new LDR notification and certification subsequent to any additional treatment performed, prior to final disposal.

## 3A.8 TRACKING SYSTEM

The Plant Information Network (PIN) will be a manufacturing execution system designed to collect and maintain information enabling the optimization of the WTP activities from order launch to finished product. The PIN consists of software applications designed to meet specific requirements and functions.

The PIN will consist of the following systems:

- Maintenance management system
- Plant data warehouse and reporting system (PDWRS).
- Laboratory information management system (LIMS).
- Solid Waste Tracking Database (SWTD)

The PIN will interface with the Integrated Control Network (ICN). The ICN will consist of the process control system, mechanical handling control system, and the autosampling control system.

These systems will be discussed in the following sections as they relate to waste tracking.

### 3A.8.1 Inventory and Batch Tracking

The PDWRS and LIMS serve as the main repository for the relevant information pertinent to a given waste batch. Data is collected for each sequence or step throughout the processing history of a given batch of waste, from receipt of raw feed to disposition of the finished products, including secondary waste. At the end of a batch cycle, the data applicable to that particular batch will be catalogued to facilitate historical recording and reporting.

The PDWRS and LIMS will also record the inventory of glass product containers, including the data generated for each container of vitrified waste and the final QA checks. Each glass product container will bear a unique ID number to facilitate tracking.

### 3A.8.2 Sample Tracking

Sampling activities will be started, monitored, and controlled by the ICN, with key sequence durations and operations logged into the PDWRS and LIMS directly from the ICN. Sampling operations will be requested by plant operators or laboratory personnel using the ICN. These requests will be time and date stamped, as will the actual sampling operation and the associated sample handling and laboratory activities. Sample requests and operations will be channeled through the ICN, which will operate in a supervisory capacity and will communicate the necessary information to the PDWRS and LIMS.

The LIMS will be an integral feature of the PIN. Workstations will be located within the laboratory and the plant control rooms. The LIMS will record the required QC checks to ensure correct sample preparation and selection of analyses, and controlled checking and approval of results.

Sample containers received in the laboratory preparation area will be identified by their ID label. The ID label provides details of the sample source and, therefore, specifies the required preparation and analysis techniques. The ID will be registered at the locations where manual intervention is required (e.g., manual samplers). The results of calibration checks on equipment and analyzers will be recorded.

Analytical results will be compiled by the LIMS and held, pending checking and approval by laboratory staff, before being formally recorded within the PDWRS and LIMS. Results that affect the progression of the main plant process will be communicated to appropriate plant personnel where required. WTP samples that come under the exclusion provided in WAC 173-303-071(3)(l), *Dangerous Waste Regulations – Excluded Categories of Waste*, may not be tracked.

Samples transferred to an analytical laboratory external to the WTP will be tracked in a LIMS. The LIMS will be capable of accurately tracking samples through the laboratory, and accurately recording analytical results and QC data. Section 3A.3.3 discusses the evaluation of external analytical laboratories.

### 3A.8.3 Secondary Waste Stream Tracking

Secondary waste streams will be tracked separate from the primary waste/product streams within the WTP. Secondary waste, once generated, will be placed in containers with unique ID numbers and tracked in the Solid Waste Tracking Database (SWTD) in a manner similar to that of primary waste streams.

Corresponding histories and data collection triggers will gather process and characterization data during the generation and packaging of secondary waste in order to support designation, treatment, and disposal of the waste. The SWTD will provide cradle-to-grave tracking and record of all secondary waste generated at the WTP. Shipments of overpacks will be labeled and tracked as part of the inventory control function of the SWTD.

Maintenance, decommissioning, or disposal activities may generate consumables, including such items as equipment, hardware, PPE, and materials used in the normal operation of the facility. Consumables designated as dangerous will be tracked by the maintenance management system, with appropriate fields denoting the hazardous classification of the disposed parts and materials, and cross-linked to disposal records. Waste being accumulated in satellite accumulation areas under the provisions of WAC 173-303-200, *Dangerous Waste Regulations – Accumulating Dangerous Waste On-Site*, may not be tracked until it has been accepted into a permitted portion of the WTP.

## 3A.9 RECORDKEEPING

Records generated for environmental compliance will be legible, identifiable, and retrievable, and will be protected against damage, deterioration, or loss. Requirements and responsibilities for record transmission, distribution, retention, maintenance, and disposal will be established and documented. The requirements contained in WAC 173-303-380(a, b, and c), *Dangerous Waste Regulations* – Facility Recordkeeping, are addressed in this WAP and will be managed through the waste tracking system record-keeping policies. Additional requirements listed under WAC 173-303-380 are addressed in the QAPP. Records generated to support activities described in this WAP will be considered QA records. These may be in electronic or hard copy format, and will be managed according to the requirements outlined in the QAPP.

The following documents that support this WAP are considered QA records:

- Sample information provided by the Tank Operations Contractor, including constituents of concern from sampling activities, laboratory analysis results, waste certifications, and shipping and transfer papers.
- Documentation used for any discrepancy resolution and nonconformance action.
- Confirmation volume measurement data, including any discrepancy resolution.
- Documentation used for LDR evaluation.
- Sampling and analytical data developed for meeting the waste acceptance criteria of receiving facilities.
- Calibration data from analytical equipment.
- Shipment and waste transfer documentation, including waste profile sheets and LDR information forms.

## 3A.10 REFERENCES

### 3A.10.1 Project Documents

24590-WTP-QAM-QA-06-001, *Quality Assurance Manual*.

24590-WTP-RPT-ENV-01-001, *RCRA Subpart AA Applicability*.

24590-WTP-RPT-ENV-01-002, *Quality Assurance Project Plan for the Waste Analysis Plan* (QAPP).

24590-WTP-RPT-MGT-04-001, *Regulatory Data Quality Objectives Optimization Report* (RDQO Optimization Report).

CCN 233666, email, A Arakali (URS) to P Benson (URS), *Sample Volume Required for Analyses of Feed Samples - WAC DQO*. May 18, 2011.

RPT-W375LV-EN00002, *Approach to Immobilized Hanford Tank Waste Land Disposal Restrictions Compliance*.

### 3A.10.2 Codes and Standards

10 CFR 60.2. *Disposal of High-Level Radioactive Wastes in Geologic Repositories – Definitions*. Code of Federal Regulations.

10 CFR 72.3. *Licensing Requirements for the Independent Storage of Spent Nuclear Fuel, High-Level Radioactive Waste, and Reactor-Related Greater than Class C Waste – Definitions*. Code of Federal Regulations.

15 USC 2601 et seq. *Toxic Substances Control Act of 1976*. United States Code.

40 CFR 260.20. *Hazardous Waste Management System*. Code of Federal Regulations.

40 CFR 264, Appendix V. *Standards for Owners and Operators of Hazardous Waste Treatment, Storage, and Disposal Facilities – Examples of Potentially Incompatible Waste*. Code of Federal Regulations.

40 CFR 264, Subpart AA. *Standards for Owners and Operators of Hazardous Waste Treatment, Storage, and Disposal Facilities – Air Emission Standards for Process Vents*. Code of Federal Regulations.

40 CFR 264, Subpart BB. *Standards for Owners and Operators of Hazardous Waste Treatment, Storage, and Disposal Facilities – Air Emission Standards for Equipment Leaks*. Code of Federal Regulations.

40 CFR 264, Subpart CC. *Standards for Owners and Operators of Hazardous Waste Treatment, Storage, and Disposal Facilities – Air Emission Standards for Tanks, Surface Impoundments, and Containers*. Code of Federal Regulations.

40 CFR 268. *Land Disposal Restrictions*. Code of Federal Regulations.

40 CFR 268.40. *Land Disposal Restrictions – Applicability* of *Treatment Standards*. Code of Federal Regulations.

40 CFR 268.42. *Land Disposal Restrictions – Treatment Standards Expressed as Specified Technologies*. Code of Federal Regulations.

40 CFR 268.44. *Land Disposal Restrictions – Variance from a Treatment Standard*. Code of Federal Regulations.

40 CFR 761.61. *Polychlorinated Biphenyls (PCBs) Manufacturing, Processing, Distribution in Commerce, and Use Prohibitions – PCB Remediation Waste*. Code of Federal Regulations.

42 USC 7401 et seq. *Clean Air Act of 1990*. United States Code.

49 CFR 173.115. *Shippers – General Requirements for Shipments and Packagings – Class 2, Divisions 2.1, 2.2, and 2.3 – Definitions*. Code of Federal Regulations.

49 CFR 173.127. *Shippers – General Requirements for Shipments and Packagings – Class 5, Division 5.1 – Definition and Assignment of Packing Groups*. Code of Federal Regulations.

49 CFR 173.128. *Shippers – General Requirements for Shipments* and *Packagings – Class 5, Division 5.2 – Definitions and Types*. Code of Federal Regulations.

49 CFR 173.50. *Shippers – General Requirements for Shipments and Packagings – Class 1 – Definitions*. Code of Federal Regulations.

49 CFR 173.54. *Shippers – General Requirements for Shipments and Packagings – Forbidden Explosives*. Code of Federal Regulations.

ASME NQA-1-2000. Quality Assurance *Requirements for Nuclear Facility Applications*. The American Society of Mechanical Engineers, New York, NY.

ASTM D93. *Standard Test Methods for Flash Point by Pensky-Martens Closed Cup Tester*. American Society for Testing and Materials, West Conshohocken, PA.

ASTM D3278. *Standard Test Methods for Flash Point of Liquids by Small Scale Closed-Cup Apparatus*. American Society for Testing and Materials, West Conshohocken, PA.

ASTM D5058-90. *Standard Practices for Compatibility of Screening Analysis of Waste*. American Society for Testing and Materials, West Conshohocken, PA.

ASTM D6232. *Standard Guide for Selection of Sampling Equipment for Waste and Contaminated Media Data Collection Activities*. American Society for Testing and Materials, West Conshohocken, PA.

DOE 5820.2A. 1988. *Radioactive Waste Management*. US Department of Energy, Washington, DC.

EPA. 1990. *Land Disposal Restrictions for Third Scheduled Wastes; Rule*, Federal Register, Vol. 55, No. 106, pp 22,520 through 22,629. US Environmental Protection Agency, Washington, DC.

EPA. 1997. *Methods and Guidance for the Analysis of Water (Includes EPA Series 500, 600, 1600 Methods) Single User* (on CD-ROM), EPA/821-C-97-001. US Environmental Protection Agency, Office of Science and Technology, Washington, DC.

EPA. 2014. *Test Methods for Evaluating Solid Waste: Physical/Chemical Methods*, SW-846, Update V, as amended. US Environmental Protection Agency, Washington, DC. https://www.epa.gov/hw-sw846/sw-846-compendium (accessed May 2, 2016).

FRL-5903-2. 1997. *Performance Based Measurement System*, 62 Federal Register 52098. US Environmental Protection Agency, Washington, DC.

RCW 70.94 et seq. *Washington Clean Air Act*. Revised Code of Washington. Olympia, WA.

WAC 173-303. *Dangerous Waste Regulations.* Washington Administrative Code Olympia, WA.

WAC 173-303-071. *Dangerous Waste Regulations – Excluded Categories of Waste*. *Washington* Admininstrative Code . Olympia, WA.

WAC 173-303-090. *Dangerous Waste Regulations – Dangerous Waste Characteristics*. Washington Administrative Code. Olympia, WA.

WAC 173-303-110. *Dangerous Waste Regulations – Sampling, Testing Methods, and Analytes*. Washington Administrative Code. Olympia, WA.

WAC 173-303-140. *Dangerous Waste Regulations – Land Disposal Restrictions*. Washington Administrative Code. Olympia, WA.

WAC 173-303-180. *Dangerous Waste Regulations – Manifest*. Washington Administrative Code. Olympia, WA.

WAC 173-303-200. *Dangerous Waste Regulations – Accumulating Dangerous Waste On-Site*. Washington Administrative Code. Olympia, WA.

WAC 173-303-300. *Dangerous Waste Regulations – General Waste Analysis*. Washington Administrative Code. Olympia, WA.

WAC 173-303-380. *Dangerous Waste Regulations – Facility Recordkeeping*. Washington Administrative Code. Olympia, WA.

WAC 173-303-395. *Dangerous Waste Regulations – Other General Requirements*. Washington Administrative code. Olympia, WA.

WAC 173-303-690. *Dangerous Waste Regulations – Air Emission Standards for Process Vents*. Washington Administrative Code. Olympia, WA.

WAC 173-303-691. *Dangerous Waste Regulations – Air Emission Standards for Equipment Leaks*. Washington Administrative Code. Olympia, WA.

WAC 173-303-692. *Dangerous Waste Regulations – Air Emission Standards for Tanks, Surface Impoundments, and Containers*. Washington Administrative Code. Olympia, WA.

WAC 173-303-806. *Dangerous Waste Regulations – Final Facility Permits*. Washington Administrative Code. Olympia, WA.

### 3A.10.3 Other Documents

APHA. 1992. *Standard Methods* for *the Examination of Water and Wastewater*, 18th Edition. American Public Health Association, Washington, DC. (Standard Method 4500-$NH_3$-F, *Nitrogen [Ammonia]*.)

CH2M Hill. 2000. *Organic Solvent Topical Report*, HNF-4240, Rev 1. CH2M Hill Hanford Group, Inc., Richland, WA.

CHPRC. 2011. *Hanford Site Solid* Waste *Acceptance Criteria*, HNF-EP-0063. CH2M Hill Plateau Remediation Company, Richland, WA.

CHPRC. 2012. *Liquid Waste Processing Facilities Waste Acceptance Criteria* (LERF/ETF Waste Acceptance Criteria), HNF-3172, Rev 6. CH2M Hill Plateau Remediation Company, Richland, WA.

DOE. 2004. *Nuclear Waste Policy Act*, DOE M 435.1-1, as amended (adapted from DOE 5820.2A). US Department of Energy, Office of Civilian Radioactive Waste Management, Washington, DC.

DOE-ORP. 2000. Memorandum from RT French (ORP) to CL Huntoon (DOE), *Closure of the Organic Solvent Safety Issue and Removal of the Organic Solvent Tanks from the Watchlist*, 00-SHD-066, dated July 14, 2000. US Department of Energy, Office of River Protection, Richland, WA.

DOE-RL. 1997. 242-A Evaporator *Dangerous Waste Permit Application*, DOE/RL-90. US Department of Energy, Richland Operations Office, Richland, WA.

DOE-RL. 2013. *Hanford Facility Dangerous Waste Permit Application, General Information Portion*, DOE/RL-91-28, Rev 5. US Department of Energy, Richland Operations Office, Richland, WA.

DOE-RL. 1999. *Tank Waste Remediation System Final Safety Analysis Report*, HNF-SD-WM-SAR-067. US Department of Energy, Richland Operations Office, Richland, WA.

Ecology, EPA, and DOE. 2000. *Framework Agreement for Management of Polychlorinated Biphenyls (PCBs) in Hanford Tank Waste*. Washington State Department of Ecology, Olympia, WA; US Department of Energy, Office of River Protection, Richland, WA; US Environmental Protection Agency, Washington, DC; US Department of Energy, Richland Operations Office, Richland, WA.

Ecology, EPA, and DOE. 2011. *Hanford Federal Facility Agreement and Consent Order*, 89-10 (Tri-Party Agreement), as amended. Washington State Department of Ecology, Olympia, WA; US Environmental Protection Agency, Washington, DC; and US Department of Energy, Washington, DC.

Ecology. 2007. WA7890008967. *Dangerous Waste Portion of the Resource Conservation and Recovery Act Permit for the Treatment, Storage, and Disposal of Dangerous Waste (Hanford Facility* RCRA Permit – Dangerous Waste Portion). Washington State Department of Ecology, Olympia, WA.

Ecology. 2009. *DST System / 204-AR Waste Unloading Station – Dangerous Waste Permit Application, Part A Form*, as amended. Washington State Department of Ecology, Olympia, WA.

Ecology. 2014. *Hanford Air Operating Permit 00-05-006 Renewal 2 - Revision A* . Washington State Department of Ecology, Olympia, WA.

EPA. 1989. *Methods for Chemical Analysis of Water and Wastes*, EPA/600/4-79-020. US Environmental Protection Agency, Washington, DC. (EPA Method 350.3, *Nitrogen, Ammonia [Potentiometric, Ion Selective Electrode]*.)

EPA. 1998. Memorandum from D Busssard (HWID) and B Johnson (EMRAD) to D Love(NEIC), *Withdrawal of Cyanide and Sulfide Reactivity Guidance*, dated March 25, 1998. US Environmental Protection Agency, Washington, DC.

Lockheed Martin. 1999. *Tank Waste Information Network System (TWINS)*, November 2000. Lockheed Martin Hanford Corporation, Richland, WA (accessed November 2000)

NRC. 1993. Letter from RM Bernero (NRC Office of Nuclear Material Safety and Safeguards) to J Lytle (DOE Office of Waste Management), dated 2 March 1993. US Nuclear Regulatory Commission, Washington, DC.

NRC. 1997. Letter from CJ Paperiello (NRC) to J Kinzer (DOE), *Classification of Hanford Low-Activity Tank Waste Fraction*, dated June 9, 1997. US Nuclear Regulatory Commission, Washington, DC.

PNL. 1994. *Waste Tank Safety Project: Analysis of Liquid Samples from Hanford Waste Tank 241-C-103*, PNL-9403. Pacific Northwest Laboratory, Richland, WA.

PNNL. 1996. *Flammable Gas Project Topical Report*, HNF-SF-1193, Revision 1. Pacific Northwest National Laboratory, Richland, WA.

Westinghouse. 1990. Internal memorandum from TD Blankenship to SM Price, *Double-Shell Tank Waste Designation*, 82331-90-313, dated August 1990. Westinghouse Hanford Company, Richland, WA.

**Table 3A-1 Summary of the Waste Feed Acceptance Process**

| | |
|---|---|
| **3A.3.1.1** | The Tank Operations Contractor submits a waste profile. |
| **3A.3.1.2** | Qualified WTP personnel perform a preshipment review by examining the waste profile and the analytical results to ensure compatibility and acceptability of the waste feed. If the review finds that the waste feed is acceptable, the WTP notifies the Tank Operations Contractor that the waste feed can be transferred. If the review finds that the waste feed is not acceptable, nonconformance actions are initiated. |
| **3A.3.1.3** | Non-conformance actions include a second review of the data and information and may include a second analysis of the split sample aliquot. If the waste feed continues to be outside of the waste acceptance criteria, adjustments (blending) may be used to change the waste composition such that acceptance criteria are met. Alternately, a change to the waste acceptance criteria may be made on a case-by-case basis (as long as there are no design or safety basis impacts and permit compliance is maintained). Otherwise, the waste will be refused for transfer (transferred to an alternative treatment or stored until other alternatives are identified). |
| **3A.3.1.4** | Acceptable waste feed is transferred from the DST system unit [a] to the WTP. |
| **3A.3.1.5** | After waste feed is received into WTP, the Tank Operations Contractor and the WTP perform confirmation volume measurements to ensure that the waste feed transferred is the waste feed that was accepted for transfer. |

[a] In this context, DST unit means either pretreated or conditioned waste sent directly to the LAW Facility for treatment, or waste sent to the PT Facility.

This page intentionally left blank.

**Table 3A-2 Waste Feed Analysis, Waste Acceptance Criteria, and Nonconformance Actions**

| Parameter | Analytical Method [a, b] | Target Minimum Reportable Quantity [c] | Acceptance Criteria | Nonconformance Actions |
|---|---|---|---|---|
| TOC using persulfate oxidation method | Method 9060A or Method 415.2 (EPA 1997) | 1 wt% | TOC < 10 wt% | Reject waste feed |
| PCBs | Method 8082A | 0.025-0.05 mg/L (supernate)<br>0.1-0.25 mg/kg (sludge) | PCBs < 50 ppm [d] | Reject waste feed |
| pH | pH meter, Method 9040C | Not established; per the method, bracket the expected pH of the sample by three pH units or more apart during calibration | Acceptable pH range >7 | Corrective actions to correct pH |
| Compatibility | ASTM D5058-90 | Temperature Change = 1 °C | Acceptable temperature change < ± 20 °C<br>No viscosity change adversely affecting waste processing | Corrective actions to eliminate incompatible conditions |
| Sb, As, Ba, Be, Cd, Cr, Cu, Pb, Ni, Se, Ag, Tl, V, Zn | Method 6010D | 0.05-015 mg/L (supernate)<br>15.0-100 mg/kg (sludge) | Not applicable | Determination of toxicity characteristic metals, underlying hazardous constituents, and potential glass formation interferences |
| Hg | Method 7470A or 7471B | 0.025-1.0 mg/L (supernate)<br>0.10-3.5 mg/kg (sludge) | Not applicable | Determination of toxicity characteristic metals |
| Semivolatile organics | Method 8270D | 0.25-5.00 mg/L (supernate)<br>1.50-5.00 mg/kg (sludge) | Not applicable | Potential risk driver during facility performance demonstration |
| Volatile organics | Method 8260B | 0.10-1.0 mg/L (supernate)<br>0.25-1.0 mg/kg (sludge) | Not applicable | Potential risk driver during facility |

**Table 3A-2 Waste Feed Analysis, Waste Acceptance Criteria, and Nonconformance Actions**

| Parameter | Analytical Method [a, b] | Target Minimum Reportable Quantity [c] | Acceptance Criteria | Nonconformance Actions |
|---|---|---|---|---|
| | | | | performance demonstration |
| Organochlorine pesticides | Method 8081B | 0.025-0.07 mg/L (supernate)<br>0.01-0.07 mg/kg (sludge) | Not applicable | Potential risk driver during facility performance demonstration |
| Anions | Method 9056A | 150-500 mg/L (supernate)<br>2.50-50.0 mg/kg (sludge) | Not applicable | Potential risk driver during facility performance demonstration |
| Organic acids | Method 9056A | 4000 mg/L (supernate)<br>2000 mg/kg (sludge) | Not applicable | Organic acids are not expected to affect the ability of the WTP to comply with risk assessment or air permitting limits |
| Ammonia / ammonium | SM 4500-$NH_3$-F (APHA 1992) or EPA Method 350.3 (EPA 1989) | 0.08-15.0 mg/L (supernate only) | Not applicable | Potential risk driver during facility performance demonstration |
| Cyanide | Method 9010C / 9014 or 9012B | 2.50-10 mg/L (supernate)<br>0.50-3.50 mg/kg (sludge) | Not applicable | Potential risk driver during facility performance demonstration |

[a] Collection of samples is in accordance with ALARA requirements for contamination control and to minimize sampler exposure. The RDQO Optimization Report (24590-WTP-RPT-MGT-04-001) specified a minimum 350 g of sludge solids (if present in the tank) and 500 mL of liquid to complete the regulatory compliance testing for each WTP feed tank, however, it is anticipated that 300 mL slurry containing at least 30 g of solids per high-level waste sample, and 170 mL of supernatant liquid per low-activity waste sample shall be sufficient. Per the sampling event requirements described in the RDQO Optimization Report, the specific sample volume and number of samples to be collected are to be specified in the Tank Sampling and Analysis Plan (TSAP) for the corresponding staged feed. The sample material is collected in the field, and then sub-aliquoted (and centrifuged, if necessary) in the laboratory under controlled conditions to further reduce exposures. Per the Performance Based Measurement System approach and safe handling

**Table 3A-2 Waste Feed Analysis, Waste Acceptance Criteria, and Nonconformance Actions**

| Parameter | Analytical Method [a, b] | Target Minimum Reportable Quantity [c] | Acceptance Criteria | Nonconformance Actions |
|---|---|---|---|---|

procedures required to limit radiological dose, sample sizes may be reduced from those recommended in the cited analyses.

[b] SW-846 Method (EPA 2014), unless specified otherwise.

[c] Typical range shown, consult RDQO Optimization Report, Table 9.3, for specific constituent requirements.

[d] Parts per million – milligrams per liter or milligrams per kilogram (approximate).

This page intentionally left blank.

**Table 3A-3 Summary of Dangerous Waste Numbers for WTP**

| Characteristic Waste Numbers | | | | Listed Waste Numbers | | |
|---|---|---|---|---|---|---|
| D001[a] | D002 | D003[a] | D004 | F001 | F002 | F003 |
| D005 | D006 | D007 | D008 | F004 | F005 | F039[b] |
| D009 | D010 | D011 | D018 | | | |
| D019 | D022 | D028 | D029 | | | |
| D030 | D033 | D034 | D035 | | | |
| D036 | D038 | D039 | D040 | | | |
| D041 | D043 | WT01[c] | WWT02[c] | | | |
| WP01[c] | WP02[c] | | | | | |

[a] When WTP is configured for DFLAW, D001 and D003 wastes are not permitted.
[b] Multisource leachate (F039) is included as a waste derived from nonspecific source wastes F001 through F005.
[c] Washington State criteria.

**Table 3A-4 Properties for the Determination of Ignitable Waste**

| Regulatory Citation | Ignitable (D001) Waste Property |
|---|---|
| WAC 173-303-090(5)(a)(i) | It is a liquid, other than an aqueous solution containing less than 24% alcohol by volume, and has a flash point less than 60°C (140°F)— as determined by a Pensky-Martens closed-cup tester, using the test method specified in ASTM D93, Standard, *Test Methods for Flash Point by Pensky-Martens Closed Cup Tester*; or a Setaflash closed-cup tester, using the test method in ASTM D3278,Standard *Test Methods for Flash Point of Liquids by Small Scale Closed-Cup Apparatus*. |
| WAC 173-303-090(5)(a)(ii) | It is not a liquid and is capable, under standard temperature and pressure, of causing fire through friction, absorption of moisture, or spontaneous chemical changes, and when ignited, it burns so vigorously and persistently that it creates a hazard. |
| WAC 173-303-090(5)(a)(iii) | It is an ignitable compressed gas that is defined in 49 CFR 173.115, *Shippers – General Requirements for Shipments and Packagings – Class 2, Divisions 2.1, 2.2, and 2.3 – Definitions*, and is determined to be flammable by the test methods described in that regulation. |
| WAC 173-303-090(5)(a)(iv) | It is an oxidizer if defined as such in 49 CFR 173.127 or 49 CFR 173.128. |

**Table 3A-5 Properties for the Determination of Reactive Waste**

| Regulatory Citation | Reactive (D003) Waste Property |
|---|---|
| WAC 173-303-090 (7)(a)(i) | It is normally unstable and readily undergoes violent change without detonating. |
| WAC 173-303-090 (7)(a)(ii) | It reacts violently to water. |
| WAC 173-303-090 (7)(a)(iii) | It forms potentially explosive mixtures with water. |
| WAC 173-303-090 (7)(a)(iv) | When mixed with water, it generates toxic gases, vapors, or fumes in a quantity sufficient to present a danger to human health or the environment. |
| WAC 173-303-090 (7)(a)(v) | It is a cyanide- or sulfide-bearing waste which, when exposed to pH conditions between 2 and 12.5, can generate toxic gases, vapors, or fumes in a quantity sufficient to present a danger to human health or the environment. |
| WAC 173-303-090 (7)(a)(vi) | It is capable of detonation or explosive reaction if it is subjected to a strong initiating source or if heated under confinement. |
| WAC 173-303-090 (7)(a)(vii) | It is readily capable of detonation or explosive decomposition or reaction at standard temperature and pressure. |
| WAC 173-303-090 (7)(a)(viii) | It is a forbidden explosive, as defined in 49 CFR 173.54, *Shippers – General Requirements for Shipments and Packagings – Forbidden Explosives*; or a Class 1 explosive (Division 1.1, Division 1.2, Division 1.3, and Division 1.5), as defined in 49 CFR 173.50. |

**Table 3A-6 Secondary Solid Mixed Waste Streams**

| Waste Stream | Characterization | Disposal |
|---|---|---|
| Out-of-service melters | Designated by process knowledge. | Disposal of out-of-service melters is currently under development. |
| HLW glass residue | | Determined case-by-case. |
| Melter components | | These wastes will be packaged and transferred to the appropriate Hanford TSD unit. |
| Offgas treatment system components:<br>• High-efficiency mist eliminators<br>• HEPA filters<br>• Silver mordenite canisters | | |
| Spent carbon and catalyst from offgas treatment | | |
| Spent ion exchange resins | | |
| Spent ultrafilters | | |
| Out-of-service equipment | | |
| Entrained solids | | Entrained solids may be returned to the DST system unit via pipeline as a slurry or added to the low-activity or high-level waste feed for vitrification. |

**Table 3A-7 Variable Solid Waste Streams**

| Waste Stream | Characterization | Disposal |
|---|---|---|
| Non-wastewater laboratory waste | Each generation event of these wastes will be individually designated by process knowledge and will comply with the receiving TSD waste acceptance criteria | The wastes will be packaged and transferred for disposal to an appropriate TSD unit. |
| Personal protective equipment | | |
| Maintenance waste | | |

**Table 3A-8 Liquid Mixed Waste Streams**

| Waste Stream | Characterization and Disposal | Sampling Point | Sampling Frequency |
|---|---|---|---|
| Waste feed evaporator condensate | The waste streams, not subject to recycling, will collect in a mixer tank, be designated as mixed waste by process knowledge and analysis, as necessary, and will be transferred to the LERF or ETF (or tanker truck, as a contingency), or DST system unit. | The streams collected in a mixed tank are grab sampled by autosampler or manually. | Sampling will be performed under the following circumstances:<br>• Before initial discharge<br>• At major process change or upset<br>• At request for resampling by the receiving facility |
| Low-activity waste melter feed evaporator condensate | | | |
| Pretreatment, LAW, and HLW offgas condensate | | | |
| LAW and HLW melter offgas scrubber blowdown | | | |
| Cesium process condensate | | | |
| Cesium ion exchange rinse water | | | |
| Laboratory wastewater | | | |
| Plant wastewater containing waste feed | | | |
| EMF evaporator bottoms | | | |
| EMF effluent | | The streams collected in a tank are grab sampled manually or sampled in-line (confirmatory sample during transfers). | |

This page intentionally left blank.

# WASTE TREATMENT AND IMMOBILIZATION PLANT
# APPENDIX 3B
# QUALITY ASSURANCE PROJECT PLAN FOR THE WASTE ANALYSIS PLAN

## CHANGE CONTROL LOG

Change Control Logs ensure that changes to this unit are performed in a methodical, controlled, coordinated, and transparent manner. Each unit addendum will have its own change control log with a modification history table. The "**Modification Number**" represents Ecology's method for tracking the different versions of the permit. This log will serve as an up to date record of modifications and version history of the unit.

Modification History Table

| Modification Date | Modification Number |
|---|---|
| 09/05/2017 | 8C.2017.6F |
| 03/2007 | |
| | |

This page intentionally left blank.

# APPENDIX 3B
# QUALITY ASSURANCE PROJECT PLAN FOR WASTE ANALYSIS PLAN

This page intentionally left blank.

# APPENDIX 3B
# QUALITY ASSURANCE PROJECT PLAN FOR WASTE ANALYSIS PLAN

## TABLE OF CONTENTS

3B.1 INTRODUCTION ..... 7
3B.2 PROJECT DESCRIPTION ..... 7
3B.3 CHARACTERIZATION OF THE WASTE FEED ..... 7
3B.4 PROJECT MANAGEMENT ..... 8
3B.4.1 Project Organization and Responsibility ..... 8
3B.4.2 Documentation and Records ..... 9
3B.4.3 Standard Operating Procedures ..... 10
3B.5 QUALITY OBJECTIVES AND CRITERIA FOR MEASUREMENT DATA ..... 10
3B.5.1 Data Quality Objectives ..... 10
3B.5.2 Data Quality Indicators ..... 10
3B.5.3 Method Detection Limits and Estimated Quantitation Limits ..... 12
3B.5.4 Reporting Requirements ..... 12
3B.6 DATA ACQUISITION AND MEASUREMENT ..... 13
3B.6.1 Sampling Procedures and Management ..... 13
3B.6.2 Instrument and Equipment Calibration, Testing, Inspection, and Maintenance ..... 15
3B.6.3 Sample Preparation Methods, Analytical Methods, and Analytical Performance Requirements ..... 16
3B.6.4 Analytical Laboratory Information Management ..... 16
3B.6.5 Analytical Laboratory Quality Control ..... 16
3B.7 PERFORMANCE ASSESSMENTS, CORRECTIVE ACTIONS, AND EVALUATIONS ..... 16
3B.7.1 Routine Analytical Laboratory Assessment and Corrective Actions ..... 16
3B.7.2 Data Reduction and Review ..... 16
3B.7.3 Reports to Management ..... 16
3B.8 DATA REPORT PACKAGES ..... 17
3B.9 VERIFICATION AND Assessment OF ANALYTICAL DATA ..... 17
3B.9.1 Data Verification ..... 18
3B.9.2 Data Evaluation and Assessment ..... 18
3B.10 REFERENCES ..... 18
3B.10.1 Project Documents ..... 18
3B.10.2 Codes and Standards ..... 18

## TABLES

Table 3B-1 Data Quality Objective 7-Step Process [a] ..... 20
Table 3B-2 Quality Control Parameters for SW-846 Test Methods ..... 21
Table 3B-3 Analytical Method Requirements for Tank Waste Acceptance Samples ..... 21
Table 3B-4 Proposed Sample Collection Methods ..... 22
Table 3B-5 Sample Preservatives, Containers, and Holding Times for Tank Waste Acceptance Samples ..... 24
Table 3B-6 Field Sampling Quality Control ..... 26
Table 3B-7 Analytical Laboratory Quality Control ..... 27

## FIGURE

Figure 3B-1 WTP Sampling and Analysis Program Organization ..... 29

# ACRONYMS

| | |
|---|---|
| ALARA | as low as reasonably achievable |
| DFLAW | direct feed low-activity waste |
| DST | double-shell tank |
| EMF | Effluent Management Facility |
| EQL | estimated quantitation limit |
| HLW | High-Level Waste (Facility) |
| Lab | Analytical Laboratory |
| LAW | Low-Activity Waste (Facility) |
| LCS | laboratory control sample |
| LIMS | laboratory information management system |
| MDL | method detection limit |
| PCB | polychlorinated biphenyl |
| PT | Pretreatment (Facility) |
| QA | quality assurance |
| QAM | *Quality Assurance Manual* |
| QAPP | *Quality Assurance Project Plan for the Waste Analysis Plan* |
| QC | quality control |
| RPD | relative percentage difference |
| TSAP | tank sampling and analysis plan |
| WAC | Washington Administrative Code |
| WAP | Waste Analysis Plan |
| WTP | Waste Treatment and Immobilization Plant |

This page intentionally left blank.

## 3B.1 INTRODUCTION

This Quality Assurance Project Plan (herein referred to as "this QAPP") supports the sampling and analysis to be implemented by the Hanford Tank Waste Treatment and Immobilization Plant (WTP), particularly in support of the characterization of the waste feed and the characterization of secondary waste streams. This QAPP will ensure that the quality and quantity of data resulting from these sampling and analysis activities can support the decision-making process for the management of WTP wastes. This QAPP was prepared using guidance provided in the following references:

- *Guidance for Quality Assurance Project Plans* (EPA 2002)
- *Test Methods for Evaluating Solid Waste: Physical/Chemical Methods*, SW-846 (EPA 2014)
- 24590-WTP-QAM-QA-06-001, *Quality Assurance Manual* (herein referred to as "QAM")

Quality assurance (QA) and quality control (QC) ensure that an activity or project meets a required quality standard. QA is associated with record keeping, tracking, audits, and assessments, and it involves determining the desired level of quality and setting limits in advance. QC is associated with the controls implemented while an activity is being performed. This QAPP complies with the applicable requirements of the QAM and becomes effective at the commencement of laboratory operations.

Controlled copies of this QAPP will be kept at the WTP. The Project Document Control manager, or equivalent, will be responsible for ensuring that controlled copies of the QAPP are kept current when revisions to this QAPP are made.

## 3B.2 PROJECT DESCRIPTION

The US Department of Energy (USDOE) has contracted Bechtel National, Inc. to design, construct, and commission the WTP. The USDOE will select an alternate contractor to operate the WTP. The WTP will store and treat mixed waste currently stored in the Hanford double-shell tank (DST) system unit, operated by the Tank Operations Contractor. The WTP has been designed to operate under two operating configurations. In the baseline configuration, DST waste will first be processed through the WTP Pretreatment (PT) Facility, and then sent on for vitrification at the Low-Activity Waste (LAW) Facility and the High-Level Waste (HLW) Facility. Alternately, if the waste meets acceptance criteria for the LAW Facility (e.g., the waste is pretreated or conditioned before transfer to WTP), the waste may be transferred directly to the LAW Facility under a direct feed operating scenario.

The WTP will commence initial operations by processing waste pretreated by the Tank Operations Contractor and fed directly to the LAW Facility. This configuration is referred to as "Direct Feed Low-Activity Waste" (DFLAW) configuration. In this configuration, the LAW Facility and Analytical Laboratory (Lab) will be commissioned to operate while the PT Facility and HLW Facility construction is completed. Upon the completion of construction and successful commissioning of the PT and HLW facilities, the WTP will switch to the baseline configuration. The portion of DST waste not subject to direct feed processing (e.g., not pretreated or conditioned before transfer to WTP) will be treated in the baseline configuration with the PT, LAW, and HLW facilities. The Tank Operations Contractor will conduct sampling and facilitate shipment for analysis and will provide results to the WTP for assessment against the waste acceptance criteria prior to waste receipt at the WTP. The WTP's secondary waste will also be sampled and analyzed if process knowledge is insufficient to properly designate the secondary waste. Analysis of samples for regulatory compliance purposes will be performed by a qualified outsourced analytical laboratory subject to the provisions of this QAPP.

## 3B.3 CHARACTERIZATION OF THE WASTE FEED

Appendix 3A, *Waste Treatment and Immobilization Plant Waste Analysis Plan* (24590-WTP-RPT-ENV-01-003, herein referred to as "WAP"), identifies the sampling locations and associated constituents for

characterization of the waste feed. Waste acceptance criteria for regulatory characterization are to be met prior to waste processing by the WTP. The waste characterization parameters are as follows:

- Total organic carbon
- Polychlorinated biphenyls (PCB)
- pH
- Compatibility
- Selected metals
- Selected organic compounds
- Selected anions
- Ammonia
- Cyanide

The waste acceptance criteria for regulatory characterization of the waste feed are described in 24590-WTP-RPT-MGT-04-001, Rev 0, *Regulatory Data Quality Objectives Optimization Report* [1] (herein referred to as "RDQO Optimization Report"). This report describes the constituents of regulatory concern and analytical methods appropriate for the characterization of the waste feed. The RDQO Optimization Report is designed to address the regulatory needs of the WTP and will be re-evaluated as a result of the environmental risk assessment, which is currently under development. The environmental risk assessment is scheduled for completion prior to the commencement of cold operation of the WTP. The RDQO Optimization Report's process is subject to periodic evaluation and may affect the list of analytes, selection of analytical methods, and associated QA/QC requirements.

## 3B.4 PROJECT MANAGEMENT

This section of the QAPP addresses the following requirements:

- Project organization and responsibility
- Special training requirements
- Documentation and records
- Standard operating procedures

### 3B.4.1 Project Organization and Responsibility

An example of the WTP management structure supporting sampling and analysis activities is depicted in Figure 3B-1. These organizational structures and functions may change over the life of the Project.

The WTP Manager of Functions and QA (or designee) reports directly to the WTP Project Director. The WTP Manager of Functions and QA will provide independent QA oversight to ensure that onsite and subcontracted sampling and analytical laboratory activities are performed in accordance with this QAPP.

The facility managers (or designees) for the PT Facility, Effluent Management Facility (EMF), HLW Facility, and LAW Facility, supported by the Lab Technical Manager, will coordinate the execution of sampling and analysis activities in their respective facilities and ensure compliance with this QAPP.

The facility operations managers (or designees) for the PT Facility, EMF, HLW Facility, and LAW Facility will be responsible for the activities associated with sampling in their respective facilities.

[1] The RDQO Optimization Report, Section 9.6, Quality Assurance, specifies compliance with ASME NQA-1-1989; however, the QAM updates this requirement and requires compliance with ASME NQA-1-2000, *Quality Assurance Requirements for Nuclear Facility Applications*.

The WTP Lab Technical Manager (or designee) will coordinate with the Tank Operations Contractor to arrange for any required collection of tank waste samples, their packaging, and shipment to the analytical facility, including ensuring the requirements of this QAPP, as they apply, are implemented by the Tank Operations Contractor. The WTP Lab Technical Manager (or designee) will ensure that analysis is conducted in accordance with this QAPP. This manager will oversee the WTP onsite laboratory, will be responsible for the coordination and technical oversight of any subcontracted analytical laboratory activities are being performed in accordance with this QAPP.

Subcontracted analytical laboratory managers will be responsible for ensuring that this QAPP is implemented in their respective laboratories.

### 3B.4.2 Documentation and Records

This section presents the requirements associated with the development, management, and distribution of waste characterization data and documents.

#### 3B.4.2.1 Documentation and Records Procedures

Documents and records developed as part of the waste analysis program will be generated, reviewed, approved, distributed, used, controlled, and revised in accordance with approved procedures. These procedures will comply with applicable requirements of the QAM.

Organizations that generate or use data in an electronic format are responsible for complying with applicable software quality requirements specified in the QAM to ensure that data input (and changes to data input) is complete and accurate, and that security and integrity of the data is maintained.

#### 3B.4.2.2 Document and Records Storage

Documents and records will be stored and maintained according to approved procedures consistent with applicable requirements of the QAM. These documents and records will include, but will not be limited to, the following:

- Training
- Data report packages
  - Chain-of-custody forms
  - Sampling methods
  - Sampling conditions
  - Sample descriptions
  - Sample management records
  - Analytical methods
  - Data summary reports
  - QA/QC reports
- Assessment reports (including non-conformance and deficiency reports)
- Analytical instrument inspection, maintenance, and calibration logs
- Records and results of waste analysis, specifically the following:
  - Waste profiles
  - Land Disposal Restrictions evaluation
  - Notification of waste acceptance
  - Notification of waste nonconformance
  - Corrective actions

- Waste feed characterization
- Secondary waste characterization

### 3B.4.3 Standard Operating Procedures

Standard operating procedures for waste sampling and analysis will be developed after the system design has been completed and before waste is received for processing. Standard operating procedures will be developed, implemented, and controlled in accordance with applicable requirements of the QAM.

## 3B.5 QUALITY OBJECTIVES AND CRITERIA FOR MEASUREMENT DATA

### 3B.5.1 Data Quality Objectives

The data quality objectives for the WTP and for the characterization of the Hanford tank waste are addressed in the following subsections.

#### 3B.5.1.1 Data Quality Objectives for the WTP

Using the data quality objectives process ensures that the data collected are of adequate quality and quantity to support the decision-making process. The seven steps of this process are identified in Table 3B-1, along with a summary of the key activities that are performed under each step.

#### 3B.5.1.2 Regulatory Data Quality Objectives Optimization for Hanford Tank Waste Characterization

Characterization of the Hanford waste feed will be performed in conformance with the process in the RDQO Optimization Report (24590-WTP-RPT-MGT-04-001). This process establishes sample preparation and analytical methods suitable for determining the concentration of selected constituents of concern at method detection limits (MDL) sufficient for regulatory requirements. The RDQO Optimization Report's process is an ongoing activity and may affect the set of analytes and analytical methods, and associated QA/QC requirements.

### 3B.5.2 Data Quality Indicators

This section discusses the following data quality indicators:

- Analytical measurement accuracy
- Analytical precision
- Representativeness

#### 3B.5.2.1 Analytical Measurement Accuracy

Accuracy can be estimated by calculating the percentage recovery of laboratory matrix spike samples using the following equation, described in *Preparation Aids for the Development of Category II Quality Assurance Project Plans* (EPA 1991):

$$\%R = \left(\frac{s - u}{C_{sa}}\right)100$$

Where

%R = percentage recovery
s = measured concentration in spiked laboratory aliquot
u = measured concentration in un-spiked laboratory aliquot
$C_{sa}$ = actual concentration of spike added

Accuracy can also be estimated by calculating percentage recovery for the use of standard reference materials or surrogates using the following equation, as outlined in *Preparation Aids for the Development of Category II Quality Assurance Project Plans* (EPA 1991):

$$\%R = \left(\frac{C_m}{C_{srm}}\right)100$$

Where

$C_m$ = measured concentration of standard reference material or surrogate
$C_{srm}$ = actual concentration of standard reference material or surrogate

Table 3B-2 lists the parameters for which accuracy will be estimated.

#### 3B.5.2.2 Analytical Precision

Precision can be estimated by analyzing matrix spikes and matrix spike duplicates. The relative percentage difference (RPD) between the analytical results for the matrix spike samples and the matrix spike duplicate samples will be calculated as outlined in *Preparation Aids for the Development of Category II Quality Assurance Project Plans* (EPA 1991):

$$RPD = \frac{|S_{ms} - S_{msd}|}{\left(\frac{S_{ms} + S_{msd}}{2}\right)} \times 100$$

Where

RPD = relative percentage difference
$S_{ms}$ = matrix spike sample
$S_{msd}$ = matrix spike duplicate sample

Precision can also be estimated by analyzing duplicate samples. The RPD between the analyte levels measured in these samples will be calculated using the following equation, provided in *Preparation Aids for the Development of Category II Quality Assurance Project Plans* (EPA 1991):

$$RPD = \frac{(C_1 - C_2)}{\left(\frac{C_1 + C_2}{2}\right)} \times 100$$

Where

RPD = relative percentage difference
$C_1$ = larger of the two observed values
$C_2$ = smaller of the two observed values

Table 3B-2 lists the parameters for which precision will be estimated.

#### 3B.5.2.3 Representativeness

Representativeness is a qualitative QA objective that determines the degree to which a sample or group of samples is indicative of the subject being studied. It takes into account the size and volume of the sample, as well as the times and locations of sampling. The number of samples collected for the characterization of waste feed and secondary waste streams will be evaluated during the development of standard operating procedures to ensure that sampling is representative of the total waste being sampled.

Liquid samples taken within the WTP will be obtained from agitated vessels or piping systems to ensure that the sample taken represents the vessel contents.

### 3B.5.3 Method Detection Limits and Estimated Quantitation Limits

The method detection limits (MDLs) and the estimated quantitation limits (EQL) supporting waste characterization analysis have been established in the RDQO Optimization Report (24590-WTP-RPT-MGT-04-001). For other analyses supporting environmental decision-making, the laboratory will establish the MDLs and EQLs in conformance with SW-846 (EPA 2014) or other guidance.

The MDL is defined as the minimum concentration of a substance that can be measured and reported with 99% confidence that the analyte concentration is greater than zero and is determined from analysis of a sample in a given matrix type containing the analyte.

The EQLs are defined as the lowest concentration that can reliably be achieved within specified limits of precision and accuracy during routine laboratory operating conditions. The EQL is generally 5 to 10 times the MDL. For many analytes, the EQL analyte concentration is selected as the lowest non-zero standard in the calibration curve. Sample EQLs are highly matrix-dependent.

The MDLs will include sample preparation methods, and will be determined by spiking uncontaminated water and solid (typically sand) with known concentrations.

The EQL is affected by the following:

- Sample matrix
- Sample volume or mass used
- Final concentrate volume or final digestate volume from sample preparation
- Amount introduced into the instrument for quantitation
- Use of dry or wet weight for reporting solids

The SW-846 methods stress that the EQL will differ by matrix and should be evaluated by matrix (EPA 2014).

Certain samples may be reduced in sample size or diluted for waste minimization and to comply with the as low as reasonably achievable philosophy, referred to as “ALARA.” The SW-846 “method hotline” indicates that sample size is not a method modification unless detection limits are not sufficient for making decisions. Additional guidelines and acceptable minor modifications for radioactive samples have been established and agreed to as documented in the RDQO Optimization Report (24590-WTP-RPT-MGT-04-001), Section 9.8.4

Section 3B.6.3, and Table 3B-2 present the Project-specific analytical performance requirements.

### 3B.5.4 Reporting Requirements

Data generated from laboratory analyses will be reported to Bechtel National, Inc. or the Tank Operations Contractor in an organized format that contains the supporting information required in the data report package for the appropriate level of data evaluation and assessment. Refer to Section 3B.8.0 for a discussion of the data report package and to Section 3B.9.0 for a discussion of data evaluation and assessment.

The reported data will identify the concentration units (e.g., milligrams per liter) and appropriate laboratory qualifiers. Data reported as non-detected will be referenced against a stated MDL or instrument detection limit value. Values between the MDL and the EQL will be qualified and documented. If selected reporting limits are used instead of EQLs or detection limits, the reporting limits will be consistent with the specific data reporting requirements presented throughout the WAP. Target minimum reportable quantity (MRQ) ranges have been established in the RDQO Optimization Report. The MDL will be compared to the minimum reportable quantity to ensure data (non-detection results in particular) are meaningful for regulatory purposes.

## 3B.6 DATA ACQUISITION AND MEASUREMENT

The following section addresses the QA requirements for data acquisition and measurement.

### 3B.6.1 Sampling Procedures and Management

Subsections 3B.6.1.1 through 3B.6.1.4 provide direction on the types of sampling procedures to be implemented and the types of equipment that may be used to support the sampling, as well as guidance on how to manage and document field activities.

#### 3B.6.1.1 Sampling Procedures and Design

The sampling procedures to be implemented for analyzing waste feed from the DST system unit to support characterization of the waste feed and the characterization of secondary waste streams are described in the following sections. Proposed sampling methods are shown in Table 3B-4. For each feed staged for transfer to the WTP, a description of the regulatory compliance sampling activities and analytical requirements will be provided in Tank Sampling and Analysis Plans (TSAP). For samples taken at WTP, standard operating procedures for sample collection will be developed after the system design is complete and before waste is received for processing.

#### 3B.6.1.2 Selected Sampling Equipment

Equipment selected to support waste sampling activities will meet the requirements of the specific SW-846 method (EPA 2014) or other applicable performance based analytical methods. If modifications of the procedure are needed, they will be requested in accordance with WAC 173-303-110, *Dangerous Waste Regulations – Sampling, Testing Methods, and Analytes*.

When feasible, disposable equipment will be used to collect samples to obviate the need to decontaminate equipment after use. The process for decontamination of sampling equipment, when necessary, is presented in Section 3B.6.1.3.3.

#### 3B.6.1.3 Sample Handling and Shipping

Personnel involved in sampling will be required to read and understand the operating procedures for sampling before implementing sampling activities. The sample preservation, containers, and holding times for each of the types of analyses to be performed are specified in Table 3B-5.

Storage conditions will be evaluated to ensure that the samples remain representative. Samples collected for waste feed characterization will be collected, packaged, and shipped by the Tank Operations Contractor to a WTP contracted laboratory. Collection methods, packaging, and shipping instructions will be addressed in the TSAP and will be governed by Tank Operations Contractor procedures consistent with SW-846 (EPA 2014), where applicable, with allowances for sample size reduction to maintain personnel dose rates as low as reasonably achievable. The specific description of sample collection activities will be included in the TSAPs for each WTP feed compliance sampling event.

The samples will not be chemical or thermally preserved during transfer or shipment to the (these preservation techniques react with the tank waste). Care will be taken during sampling to avoid the temporary storage of samples in excessively high or low temperatures. The samples shall be shipped on the same day as sampled whenever possible to meet analytical holding time requirements.

A unique identification number generated by the laboratory information management system (LIMS) will be marked on sample containers before collecting the sample. This number will be recorded on the chain-of-custody form. The sample labeling and chain-of-custody documentation will be checked to ensure the traceability of each of the samples.

#### 3B.6.1.3.1 Chain-of-Custody

The ability to demonstrate that samples were obtained from the locations specified in the applicable WAP and that they reached the laboratory without alteration are key considerations for data resulting from laboratory analysis. Evidence of collection, shipment, receipt at the laboratory, and laboratory custody until disposal will be documented using a chain-of-custody form. The chain-of-custody form will, as a minimum, supply the following information:

- Sample identification number
- Sample volume
- Number of sample bottles/type
- Method of sampling
- Sampling date and time
- Sampling location
- Name of the contact person
- Shipping date
- Analyses to be performed
- Preservation method
- Sample characteristics (if any)

A sample will be considered to be in custody when it is under any of the following conditions:

- In a person's possession.
- In view, after having been in a person's physical possession.
- Locked so that it cannot be tampered with, after having been in a person's physical custody.
- Sealed with tamper-proof seal.
- In a secured area, restricted to authorized personnel only.

Chain-of-custody forms will be included in the final data report package. Electronic chain-of-custody forms and electronic signatures may be used.

The chain-of-custody practices and procedures for the WTP will address the following general requirements for custody records:

- Sample management planning and procedures will identify responsibilities, including interfaces between organizations for documenting possession of a sample from collection and identification through handling, preservation, shipment, transfer, analysis, storage, and final disposition.
- Sample traceability will ensure that it can be tracked from its collection through final disposition.
- Sample identification will be documented and checked before the sample is released.
- If individual samples have specific custody requirements, as required by documents such as the WAP, TSAP, test plans, study plans or job packages, these requirements will be implemented.
- For samples with limited use or storage life, methods will be established that preclude using an out-of-date sample.

Implementing documents will identify those representative samples that need to be archived.

#### 3B.6.1.3.2 Sample Preservation, Containers, and Holding Time

Table 3B-5 lists the sample container, preservation method, and holding time requirements for different types of analyses.

#### 3B.6.1.3.3 Maintaining and Decontaminating Field Equipment

Field equipment used to support waste monitoring and sampling activities will be maintained in accordance with manufacturer guidelines, and will be decontaminated prior to use. Disposable sampling equipment will be used whenever possible due to the high concentrations of radionuclides in the waste materials to be sampled.

Equipment decontamination will be performed according to approved procedures and consistent with guidance provided in the following references or by the manufacturer:

- SW-846, *Test Methods for Evaluating Solid Waste: Physical/Chemical Methods* (EPA 2014)
- *A Compendium of Superfund Field Operations Methods* (EPA 1987)

### 3B.6.1.4 Sampling Quality Assurance and Quality Control Procedures

The WTP sampling procedures for characterization of waste feed and secondary waste streams will be developed in accordance with the requirements of this QAPP. The QA audits and surveillances of sampling activities will be conducted by the WTP Manager of Functions and QA (or designee) to verify the implementation of QAPP requirements. Management assessments will also be performed by the WTP Lab Technical Manager (or designee) to ensure that the waste sampling program is adequate and effective. Revisions to established sampling procedures will be reviewed to determine their possible impacts on data quality and approved by authorized personnel prior to issuance and implementation. Field records and documentation, including field measurements, will be handled and preserved in a manner consistent with Section 3B.4.2 of this QAPP. The QA surveillances and audits, management assessments, corrective actions, and root cause analyses will be implemented as described in Section 3B.7.0 of this QAPP.

Sampling QC procedures may involve the collection of blanks and duplicate samples. The purpose and frequency of collection for each of these samples are presented in Table 3B-7 together with sampling QC objectives.

## 3B.6.2 Instrument and Equipment Calibration, Testing, Inspection, and Maintenance

The following sections address instrument calibration, testing, inspection, and maintenance requirements for waste analysis.

### 3B.6.2.1 Instrument Calibration Frequency

Analytical laboratory personnel will be responsible to ensure that instruments are calibrated in accordance with approved procedures. Instrument calibration will comply with applicable QA/QC requirements of the applicable analytical method. Instrument calibration records will be managed in accordance with Section 3B.4.2 of this QAPP.

### 3B.6.2.2 Instrument and Equipment Testing, Inspection, and Preventive Maintenance Requirements

The analytical laboratory management (or designee) will ensure that laboratory instruments are routinely tested and inspected to confirm that they are in proper working order. Preventive maintenance schedules recommended by the equipment manufacturer will be implemented and documented. Instrument maintenance records will be managed in accordance with Section 3B.4.2 of this QAPP.

### 3B.6.3 Sample Preparation Methods, Analytical Methods, and Analytical Performance Requirements

The sample preparation methods, analytical methods, and performance requirements (e.g., EQL, precision, and accuracy) for analyses are summarized in Table 3B-3 and Table 3B-2, and are consistent with the requirements specified in SW-846 (EPA 2014) and in conformance with the regulatory data quality objectives identified in the RDQO Optimization Report (24590-WTP-RPT-MGT-04-001). Any applicable analytical method provided in WAC 173-303-110 may be used for analysis. If an analytical method used for regulatory purposes other than the methods provided in WAC 173-303-110 are proposed, approval of the method will be requested from Ecology according to WAC 173-303-910(2). The proposed analytical method will not be used for regulatory purposes until Ecology authorizes the method. If modifications to a procedure are needed, they will be requested in accordance with WAC 173-303-110(4). The SW-846 "method hotline" indicates that sample size is not a method modification unless detection limits are not sufficient for making decisions.

### 3B.6.4 Analytical Laboratory Information Management

The LIMS is part of the Plant Information Network (PIN) system. Sample and QC data generated by the analytical laboratory will be stored in the LIMS database. At a minimum, this database will hold the sample number, sample collection date, analysis date, analytical methods employed, analytical results, and qualifiers. In the event of a LIMS system failure, this information will be recorded in paper form and entered into LIMS when the system is operating. For a more complete description of these software systems, refer to Section 3A.7.0 of the WAP.

### 3B.6.5 Analytical Laboratory Quality Control

The analytical laboratory QC procedures will involve the analysis of duplicates, method blanks, and matrix spike samples. The purpose and frequency for each of these samples are presented in Table 3B-7.

## 3B.7 PERFORMANCE ASSESSMENTS, CORRECTIVE ACTIONS, AND EVALUATIONS

The following subsections address assessment and oversight requirements.

### 3B.7.1 Routine Analytical Laboratory Assessment and Corrective Actions

The WTP Lab Technical Manager (or designee) will conduct periodic assessments to verify that laboratory procedures meet the requirements of this QAPP. The QA surveillances and audits will be conducted by the WTP Manager of Functions and QA (or designee) to ensure that laboratory activities comply with applicable QA requirements. Management assessments will also be performed by the WTP Lab Technical Manager (or designee) to ensure that the laboratory program is adequate and effective.

Management assessments, QA surveillances and audits, corrective action, and root cause analyses will be conducted according to approved procedures.

### 3B.7.2 Data Reduction and Review

Data reduction and review procedures will be developed for data generated for environmental compliance according to the requirements of the current version of SW-846 (EPA 2014) or other applicable guidance, prior to the operation of the analytical laboratory. Evaluation and assessment of analytical data is discussed in Section 3B.9.0.

### 3B.7.3 Reports to Management

Conditions identified as having an adverse effect on quality, the significance of such conditions, and corrective actions will be documented, reported to the appropriate level of management, and resolved according to approved procedures.

The assessment reports may include the following items, as appropriate:

- Deviations from the requirements specified in this QAPP.
- Limitations or constraints on the applicability of the resulting analytical data.
- Results of QA surveillances and audits of the waste analysis program.
- Management assessments of data quality in terms of MDLs, precision, accuracy, and representativeness. The quantitative performance indicators for precision and accuracy are given in Table 3B-2.

## 3B.8 DATA REPORT PACKAGES

The data reports received from the laboratory will serve as documentation of an analytical project. The primary data reporting will be by electronic systems. The following are examples of the information contained in data reports documenting environmental support activities:

- Sample identifications
- Holding times, including the following:
  - Sampling date
  - Date the laboratory received the sample
  - Extraction or preparation date
  - Analysis date
  - Re-extraction or re-analysis dates
- Analytical parameters
- QC, including the following:
  - Laboratory control sample (LCS) / standard including percent recovery
  - Preparation blanks, including identity and concentration of each constituent identified
  - Sample, duplicate (including RPD) and replicate results
  - Recovery results of matrix spikes, matrix spike duplicates, or post digestion spikes (if matrix spike not performed)
  - Detection limits
  - Report uncertainty/counting error for radiochemical analysis
  - Additional data reporting (that is, the percent of moisture/solid or correction for equivalent dry weight)
- QA, including the following:
  - Descriptions of procedures and methods used to generate the results
  - Deviations from procedures
  - Analytical anomalies for raw data results, spikes, surrogates, and method blanks
  - Analytical qualifiers
  - Calibration and instrument tuning
  - Corrective actions implemented
- Raw analytical data
- Chain-of-custody

## 3B.9 VERIFICATION AND ASSESSMENT OF ANALYTICAL DATA

A graded approach to data verification and assessment processes will ensure that the data resulting from the selected analytical method are consistent with the requirements specified in this QAPP. Data validation will be performed when necessary.

### 3B.9.1 Data Verification

The primary data reporting will be via electronic data systems. Data verification will be performed on laboratory data packages that support environmental compliance to ensure that their content is complete and in order. A review of the data package will be performed to ensure the following:

- The data package contains the required technical information.
- Deficiencies are identified and documented.
- Identified deficiencies are corrected by the laboratory and the appropriate revisions are made.
- Deficient pages are replaced with the laboratory corrections.
- Data package revisions are tracked.
- A copy of the completed verification report is placed in the data file.

### 3B.9.2 Data Evaluation and Assessment

Data will be evaluated to ensure that the data resulting from analytical measurements meet the quality requirements specified in the applicable data quality objectives. A data review will be performed on data packages that support environmental compliance to ensure the following parameters are met:

- Precision
- Accuracy
- Representativeness
- Comparability
- Completeness
- Sensitivity (detection limits)

A plan for assessing the data will be developed and implemented prior to the operation of the laboratory.

Data obtained will be evaluated to determine whether they are of the appropriate type, quality, and quantity to support their intended use. Such data quality assessment will be performed, in accordance with *Guidance for Data Quality Assessment* (EPA 1996), on data packages as necessary to determine acceptability and process ability of the waste, for assessment of secondary waste characteristics, to ensure environmental compliance in accordance with applicable data quality objectives.

## 3B.10 REFERENCES

### 3B.10.1 Project Documents

24590-WTP-QAM-QA-06-001, *Quality Assurance Manual (QAM).*

24590-WTP-RPT-MGT-04-001, Rev. 0, *Regulatory Data Quality Objectives Optimization Report* (RDQO Optimization Report).

### 3B.10.2 Codes and Standards

ASME NQA-1-2000. *Quality Assurance Requirements for Nuclear Facility Applications*. The American Society of Mechanical Engineers, New York, NY.

WAC 173-303-110. *Dangerous Waste Regulations – Sampling, Testing Methods, and Analytes*. Washington Administrative Code

WAC 173-303-910. *Dangerous Waste Regulations – Petitions*. Washington Administrative Code.

### 3B.10.3 Other Documents

ASTM D5058-12. 2012. *Standard Practices for Compatibility of Screening Analysis of Waste*. American Society for Testing and Materials, West Conshohocken, PA.

ASTM D3987-85. 2004. *Standard Test Method for Shake Extraction of Solid Waste with Water*. American Society for Testing and Materials, West Conshohocken, PA.

EPA. 1974. *Nitrogen, Ammonia (Potentiometric, Ion Selective Electrode)*, Method 350.3. US Environmental Protection Agency, Washington, DC.

EPA. Method 350.3. *A Compendium of Superfund Field Operations Methods*, EPA/540/P-87/001b, August 1987. US Environmental Protection Agency, Washington, DC.

EPA. 1991. *Preparation Aids for the Development of Category II Quality Assurance Project Plans*, EPA/600/8-91/004. US Environmental Protection Agency, Washington, DC.

EPA. 1993. *Determination of Inorganic Anions by Ion Chromatography*, Method 300.0. US Environmental Protection Agency, Office of Research and Development, Cincinnati, OH.

EPA. 2002. *Guidance for Quality Assurance Project Plans*, EPA QA/G-5, EPA/240/R-02/009. US Environmental Protection Agency, Office of Environmental Information, Washington, DC.

EPA. 2006. *Guidance for the Data Quality Objectives Process*, EPA QA/G-4, EPA/240/B-06/001. US Environmental Protection Agency, Office of Environmental Information, Washington, DC.

EPA. 2014. *Test Methods for Evaluating Solid Waste: Physical/Chemical Methods*, SW-846, Update V, as amended. US Environmental Protection Agency, Washington, DC. https://www.epa.gov/hw-sw846/sw-846-compendium (accessed May 2, 2016).

**Table 3B-1 Data Quality Objective 7-Step Process [a]**

| | Key Activities |
|---|---|
| **Step 1:**<br>State the problem | • Identify the constituents of concern<br>• Develop a conceptual site model<br>• Formulate a concise problem statement |
| **Step 2:**<br>Identify the decisions | • Identify the principal study questions that the study will attempt to resolve<br>• Identify the alternative actions that may result once each of the principal study questions has been resolved<br>• Integrate the principal study questions and alternative actions to form decision statements |
| **Step 3:**<br>Identify required inputs | • Identify the information needed to resolve each decision statement<br>• Define the source and level of quality for the information needed<br>• Determine whether data of adequate quality already exist |
| **Step 4:**<br>Define study boundaries | • Define the population of interest and the geographic area or volume to which each decision statement applies<br>• Divide the population into statistically-based strata with relatively homogeneous characteristics<br>• Define the temporal boundaries of the problem<br>• Define the time frame to which each decision applies<br>• Determine when to collect the data |
| **Step 5**:<br>Develop a decision rule | • Define the statistical parameters (e.g., mean, upper confidence limit)<br>• Determine the final action<br>• Develop "if… then…" statements that incorporate the parameter of interest, scale of decision-making, action level, and actions that would result from the decision |
| **Step 6:**<br>Specify tolerable limits on decision errors | • Define the expected concentration range for the analyte of interest<br>• Identify the decision error<br>• Define the null hypothesis<br>• Select a statistical vs. non-statistical sampling design<br>• For statistical designs, define the boundaries of the gray region and set tolerable limits for decision error |
| **Step 7:**<br>Optimize the design | <u>Non-statistical design</u><br>• Summarize applicable screening method alternatives<br>• Summarize applicable sampling method alternatives<br>• Develop an integrated screening or sampling design<br><u>Statistical design</u><br>• Identify statistical sampling design alternatives (e.g., simple random, stratified random) and select the preferred option<br>• Select the statistical hypothesis test for testing the null hypothesis<br>• Evaluate various design options by varying the decision error criteria and width of the gray region<br>• Select the preferred sampling design |

[a] *Guidance for the Data Quality Objectives Process* (EPA 2006)

**Table 3B-2 Quality Control Parameters for SW-846 Test Methods**

| Analytes | Method | QC Acceptance Criteria | | | |
|---|---|---|---|---|---|
| | | LCS % Recovery | Spike % Recovery | MSD / Dup Relative Percent Difference | Replicate % Relative Standard Deviation |
| Metals | 6010D | 80-120% | 75-125% | ≤ 20% | ≤ 20% |
| Hg | 7470A or 7471B | 80-120% | 75-125% | ≤ 20% | ≤ 20% |
| pH | 9040C | ±0.1 pH unit | NA | NA | NA |
| Volatile organic compounds | 8260B | 70-130% | 50-150% | ≤ 30% | ≤ 30% |
| Semivolatile organic compounds | 8270D | 70-130% | 50-150% | ≤ 30% | ≤ 30% |
| PCBs | 8082 | 70-130% | 50-150% | ≤ 30% | ≤ 30% |
| Inorganic anions | 9056A | 80-120% | 75-125% | < 20% | < 20% |
| Cyanide | Method 9010C / 9014 or 9012B | 80-120% | 75-125% | < 20% | < 20% |
| Ammonia | SM 4500-$NH_3$ F (APHA 1992) or Method 350.3 (EPA 1989) | 80-120% | 75-125% | < 20% | < 20% |
| Pesticides | 8081B | 70-130% | 50-150% | ≤ 30% | ≤ 30% |

**Table 3B-3 Analytical Method Requirements for Tank Waste Acceptance Samples**

| Constituent | Target EQL | Analytical Method [a] | |
|---|---|---|---|
| | | Solid | Liquid |
| Total organic carbon | 10 mg/L | Method 9060A | Method 9060A or Method 415.2 (EPA 1997) |
| PCBs | 3.3 mg/L | 8082A | 8082A |
| pH | 2 to 12.5 pH units | 9040C | 9040C |
| Compatibility | ± 1 °C | Not Applicable | ASTM D5058-12 |
| Metals, except mercury | See RDQO Optimization Report, Section 9.8.3 | 6010D | 6010D |
| Mercury | See RDQO Optimization Report, Section 9.8.3 | 7471B | 7470A |

**Table 3B-3 Analytical Method Requirements for Tank Waste Acceptance Samples**

| Constituent | Target EQL | Analytical Method [a] | |
|---|---|---|---|
| | | Solid | Liquid |
| Volatile organic compounds | See RDQO Optimization Report, Section 9.8.3 | 8260B | 8260B |
| Semivolatile organic compounds | See RDQO Optimization Report, Section 9.8.3 | 8270D | 8270D |
| Inorganic anions | See RDQO Optimization Report, Section 9.8.3 | Method 300.0 (EPA 1993) / 9056A or ASTM D3987-85 / 9056A | 9056A |
| Cyanide | See RDQO Optimization Report, Section 9.8.3 | 9010C/9014 or 9012B | 9010C/9014 or 9012B |
| Ammonia | See RDQO Optimization Report, Section 9.8.3 | Not Applicable | SM 4500-$NH_3$-F (APHA 1992) or Method 350.3 (EPA 1974) |
| Pesticides | See RDQO Optimization Report, Section 9.8.3 | 8081B | 8081B |

[a] SW-846 Method (EPA 2014), unless specified otherwise.

**Table 3B-4 Proposed Sample Collection Methods**

| Waste Category | Waste Type | Sample Purpose | Type of Sample |
|---|---|---|---|
| DST system unit waste feed | Staged tank waste | Waste acceptance [a] | Representative grab sample |
| Solid | **Mixed Waste Streams** | | |
| | ILAW/IHLW product verification | ILAW/IHLW characterization | Grab |
| | Entrained solids | Secondary waste characterization | Grab |
| | Spent ion exchange resin | Secondary waste characterization | Grab |
| | Offgas treatment system equipment and components | Secondary waste characterization | Grab or smear |
| | Spent carbon and catalyst from offgas treatment | Secondary waste characterization | Grab |
| | Out-of-service equipment | Secondary waste characterization | Grab or smear |
| | **Dangerous or Mixed Waste Streams** | | |

| Waste Category | Waste Type | Sample Purpose | Type of Sample |
|---|---|---|---|
| | Lab waste | Secondary waste characterization | Grab |
| | Maintenance waste | Secondary waste characterization | Grab |
| | Used personal protective equipment | Secondary waste characterization | Grab |
| Liquid | **Mixed Waste Streams** | | |
| | Waste feed evaporator condensate [b] | Secondary waste characterization | Grab |
| | LAW melter feed evaporator condensate [b] | Secondary waste characterization | Grab |
| | LAW and HLW offgas condensate [b] | Secondary waste characterization | Grab |
| | LAW and HLW melter off-gas scrubber blowdown [b] | Secondary waste characterization | Grab |
| | Cesium process condensate [b] | Secondary waste characterization | Grab |
| | Cesium ion exchange rinse water [b] | Secondary waste characterization | Grab |
| | Plant wastewater containing DST waste [b] | Secondary waste characterization | Grab |
| | **Dangerous or Mixed Waste Streams** | | |
| | Maintenance waste | Secondary waste characterization | Grab |
| | Off-specification chemicals | Secondary waste characterization | Grab |
| Effluent | EMF effluent | Verification that effluents meet the disposal facility waste acceptance criteria | Grab or in-line |
| | Nonradioactive liquid waste disposal system effluent | Verification that effluents meet the Treated Effluent Disposal Facility system unit waste acceptance criteria | Grab |

[a] Subject to requirements of the RDQO Optimization Report (24590-WTP-RPT-MGT-04-001).
[b] These aqueous waste streams are collected in the effluent mixing tank prior to sampling.

**Table 3B-4 Sample Preservatives, Containers, and Holding Times for Tank Waste Acceptance Samples**

| Analysis | Container [a] | Preservative [b] | Holding Time |
|---|---|---|---|
| **Liquid Samples** | | | |
| Total organic carbon | Plastic | None | 28 days |
| PCB compounds | Glass with Teflon-lined screw cap | None | 14 days (extraction)<br>40 days (analysis) |
| pH | Plastic | None | Analyze as soon as possible |
| Compatibility | Plastic | None | Analyze as soon as possible |
| Inorganic anions | Plastic | None | 7 days |
| Ammonia | Glass with Teflon-lined screw cap | None | 28 days |
| Metals, except mercury | Plastic | None | 6 months |
| Mercury | Plastic | None | 28 days |
| Cyanide | Glass with Teflon-lined screw cap | None | 14 days |
| Volatile organic compounds | Glass with Teflon-lined screw cap | None | 14 days |
| Semivolatile organic compounds | Amber glass | None | 14 days (extraction)<br>40 days (analysis) |
| Organic acids | Glass with Teflon-lined screw cap | None | 14 days |
| Pesticides | Glass with Teflon-lined screw cap | None | 14 days (extraction)<br>40 days (analysis) |
| **Solid Samples** | | | |
| Total organic carbon | Plastic | None | 28 days |
| PCB compounds | Glass with Teflon-lined screw cap | None | 14 days (extraction)<br>40 days (analysis) |
| pH | Plastic | None | Analyze as soon as possible |
| Compatibility | Plastic | None | Analyze as soon as possible |
| Inorganic anions | Plastic | None | 7 days |
| Metals, except mercury | Glass | None | 6 months |

**Table 3B-4 Sample Preservatives, Containers, and Holding Times for Tank Waste Acceptance Samples**

| Analysis | Container [a] | Preservative [b] | Holding Time |
|---|---|---|---|
| Mercury | Glass | None | 28 days |
| Cyanide | Glass with Teflon-lined screw cap | None | 14 days |
| Volatile organic compounds | Glass with Teflon-lined screw cap | None | 14 days |
| Semivolatile organic compounds | Glass | None | 14 day (extraction)<br>40 days (analysis) |
| Organic acids | Glass with Teflon-lined screw cap | None | 14 days |
| Inorganic anions | Plastic | None | 28 days |
| Pesticides | Glass with Teflon-lined screw cap | None | 14 days (extraction)<br>40 days (analysis) |

Notes: [a] Collection of samples is in accordance with ALARA requirements for contamination control and to minimize sampler exposure. The RDQO Optimization Report (24590-WTP-RPT-MGT-04-001) specified a minimum 350 g of sludge solids (if present in the tank) and 500 mL of liquid to complete the regulatory compliance testing for each WTP feed tank, however, it is anticipated that 300 mL slurry containing at least 30 g of solids per HLW sample, and 170 mL of supernatant liquid per sample shall be sufficient. Per the sampling event requirements described in the RDQO Optimization Report, the specific sample volume and number of samples to be collected are to be specified in the TSAP for the corresponding staged feed. The sample material is collected in the field, and then sub-aliquoted (and centrifuged, if necessary) in the laboratory under controlled conditions to further reduce exposures. Per the Performance Based Measurement System approach and safe handling procedures required to limit radiological dose, sample sizes may be reduced from those recommended in the analytical methods identified in Table 3B-3 and Table 3B-2.

[b] Methodologies may be modified per requirements of the RDQO Optimization Report.

**Table 3B-6 Field Sampling Quality Control**

| Sample Type | Frequency | Purpose |
|---|---|---|
| Water blank | The frequency will be determined and documented in operating procedures before sampling operations are begun. The minimum frequency shall be once per sampling event. | This will be a water sample that receives the same analysis steps as the sample for the specified procedure. The blank will confirm that the water is not contaminated. |
| Equipment blank | | A sample of analyte-free water used to rinse the sampling equipment. It is used to document adequate decontamination of sampling equipment [a]. Analysis will be for tests performed for the specified procedure. |
| Duplicate | | This QC sample is a second aliquot of the collected sample and is used to determine method precision. |
| Trip blank | The frequency will be determined and documented in operating procedures before sampling operations are begun. The minimum frequency shall be once per shipping container for samples subject to volatile organic compound analysis. | A sample of analyte-free water that accompanies sample containers to and from the field. These samples are used to detect any contamination or cross-contamination during sample handling and transportation. |

[a] Decontamination will be performed if disposable equipment cannot be used.

## Table 3B-7 Analytical Laboratory Quality Control

| Sample Type | Frequency | Purpose |
|---|---|---|
| Duplicate | The frequency will be determined and documented in operating procedures before analytical operations are begun. The minimum frequency will be once per sample batch. | This QC sample is a second aliquot of the collected sample and is used to determine method precision. |
| Method blank | | An analyte-free matrix to which reagents are added in the same volumes or proportions as those used in sample processing. It is used to document contamination resulting from the analytical process. This method blank will be carried through the complete sample preparation and analytical procedure. |
| Matrix spike or matrix spike duplicate | | This QC sample is spiked with known quantities of analytes. Matrix spikes and matrix spike duplicate quality control samples are used to assess the accuracy and precision of the analytical method. |
| Laboratory Control Sample | The frequency will be determined and documented in operating procedures before analytical operations are begun. | The LCS may be a matrix-matched reference material, or if one is not available, a blank spike that is put through the analytical process. For methods that lack a suitable LCS, or when no sample preparation is required, calibration verification standards (initial calibration verification or continuing calibration verification) or system performance checks may be used to verify analytical accuracy. |

This page intentionally left blank.

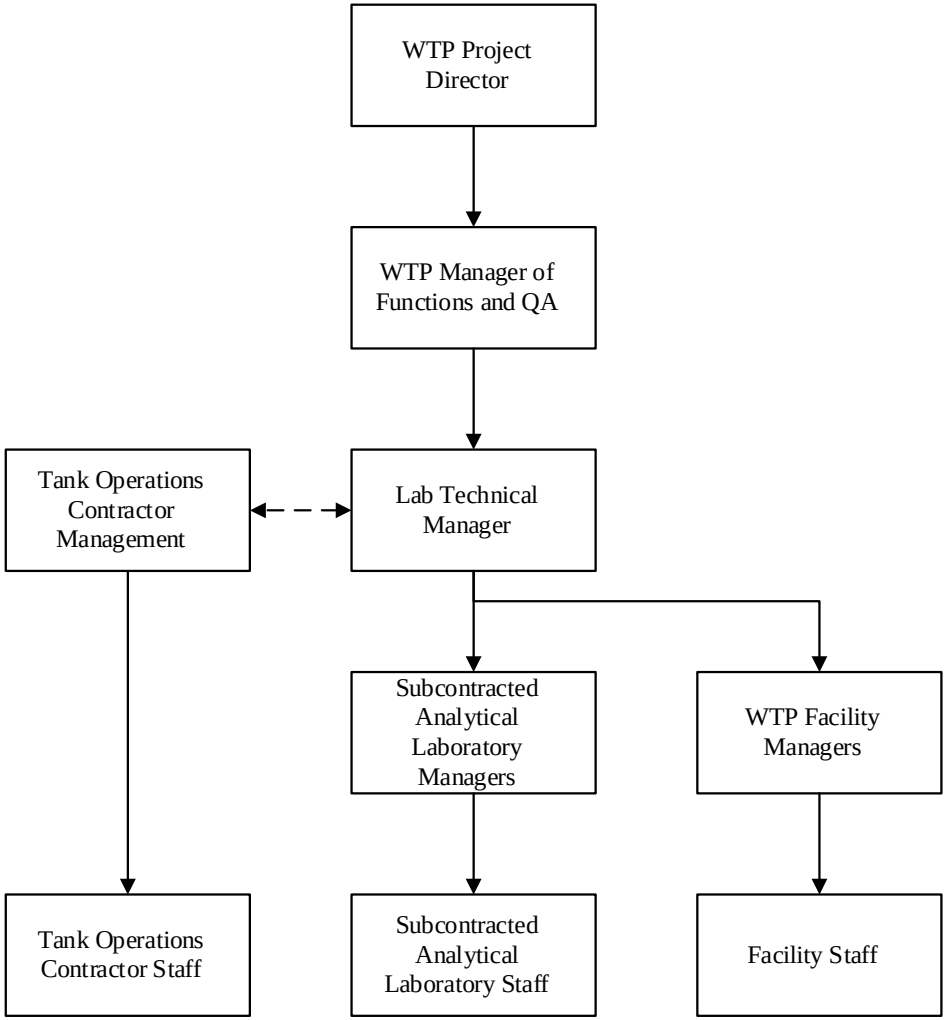


**Figure 3B-1 WTP Sampling and Analysis Program Organization**

This page intentionally left blank.

# WASTE TREATMENT AND IMMOBILIZATION PLANT
# CHAPTER 4.0
# PROCESS INFORMATION

## CHANGE CONTROL LOG

Change Control Logs ensure that changes to this unit are performed in a methodical, controlled, coordinated, and transparent manner. Each unit addendum will have its own change control log with a modification history table. The "**Modification Number**" represents Ecology's method for tracking the different versions of the permit. This log will serve as an up to date record of modifications and version history of the unit.

Modification History Table

| Modification Date | Modification Number |
|---|---|
| 09/05/2017 | 8C.2017.6F |
| 12/15/2016 | 8C.2016.Q3 |
| 06/20/2016 | 8C.2016.4F |
| | |

This page intentionally left blank.

# CHAPTER 4.0
# PROCESS INFORMATION

This page intentionally left blank.

# CHAPTER 4.0
# PROCESS INFORMATION

## TABLE OF CONTENTS

4.0 PROCESS INFORMATION ..... 7
4.1 Process Description ..... 7
4.1.1 Process Overview ..... 8
4.2 Tank Systems ..... 11
4.2.1 Design, Installation, and Assessment of Tank Systems ..... 11
4.2.1.1 Design Requirements ..... 12
4.2.1.2 Physical Information for Tanks ..... 13
4.2.2 Ancillary Equipment Requirements ..... 13
4.2.2.1 Transfer or Pressure Control Devices ..... 13
4.2.2.2 Bulges ..... 15
4.2.2.3 Description of WTP Piping System ..... 15
4.2.2.4 Description of Foundations ..... 18
4.2.3 Integrity Assessments ..... 18
4.2.4 Additional Requirements for Existing Tanks ..... 18
4.2.5 Additional Requirements for New Tanks ..... 18
4.2.5.1 Additional Requirements for New On-Ground or Underground Tanks ..... 18
4.2.6 Secondary Containment and Release Detection for Tank Systems ..... 19
4.2.6.1 Secondary Containment System Requirements ..... 20
4.2.6.2 Management of Release or Spill to Sump and Secondary Containment Drain Systems ..... 24
4.2.6.3 Additional Requirements for Secondary Containment ..... 24
4.2.7 Variances from Secondary Containment Requirements ..... 24
4.2.8 Tank Management Practices ..... 24
4.2.9 Labels or Signs ..... 25
4.2.10 Air Emissions ..... 25
4.2.10.1 Tank System Emissions ..... 25
4.2.10.2 Process Vents ..... 26
4.2.10.3 Equipment Leaks ..... 26
4.2.10.4 Tanks and Containers ..... 26
4.2.11 Management of Ignitable, Reactive and Incompatible Waste in Tanks ..... 26

4.3 LAW and HLW Miscellaneous Treatment Sub-Systems [WAC 173-303-680 and WAC 173-303-806(4)(i)] ..... 27
4.3.1 Melter Capacity and Production ..... 27
4.3.2 Description of Melter Units [WAC 173-303-806(4)(i)(i)] ..... 27
4.3.3 Automatic Waste Feed Cut-Off System ..... 29
4.3.4 Offgas Treatment System ..... 29
4.3.5 Miscellaneous Unit Emissions Performance ..... 30
4.3.6 Physical and Chemical Characteristics of Waste [WAC 173-303-680(2)(a)(i)] ..... 31
4.3.7 Environmental Performance Standards for Melter Systems [WAC 173-303-680(2)] ..... 31
4.3.7.1 Protection of Groundwater, Subsurface Environment, Surface Water, Wetlands and Soil Surface [WAC 173-303-680(2)(a) and (b)] ..... 31
4.3.7.2 Protection of the Atmosphere [WAC 173-303-680(2)(c)] ..... 31
4.3.8 Treatment Effectiveness Report [WAC 173-303-806(4)(i)(iv)] ..... 31
4.3.9 Approach to Risk Assessment [WAC 173-303-680(2)(c)(i) through (vii)] ..... 32
4.4 Other Waste Management Units ..... 32
4.4.1 Waste Piles ..... 32
4.4.2 Surface Impoundments ..... 33
4.4.3 Incinerators ..... 33
4.4.4 Landfills ..... 33
4.4.5 Land Treatment ..... 33
4.4.6 Air Emissions Control ..... 33
4.4.7 Waste Minimization ..... 33
4.4.8 Groundwater Monitoring for Land-Based Units ..... 33
4.4.9 Functional Design Requirements ..... 33

# CHAPTER 4 SUBCHAPTERS TABLE OF CONTENTS

CHAPTER 4A ..... 4A
Figures and Drawings ..... 4A-1
CHAPTER 4C ..... 4C
Compliance with Uniform Building Code ..... 4C-1
CHAPTER 4D ..... 4D
Pretreatment Facility Process Description ..... 4D-1
CHAPTER 4E ..... 4E
Low-Activity Waste Vitrification Facility Process Description ..... 4E-1
CHAPTER 4F ..... 4F
High-Level Waste Vitrification Facility Process Description ..... 4F-1
CHAPTER 4G ..... 4G
Direct-Feed Low Activity Waste Facility (EMF) Process Description ..... 4G-1
CHAPTER 4H ..... 4H
Analytical Laboratory Process Description ..... 4H-1
CHAPTER 4I ..... 4I
Balance of Facilities Process Description ..... 4I-1

This page intentionally left blank.

# 4.0 PROCESS INFORMATION

## 4.1 Process Description

The Hanford Tank Waste Treatment and Immobilization Plant (WTP) is a Treatment, Storage, and Disposal Facility, permitted as Operating Unit Group 10 under the Hanford Dangerous Waste Permit. The WTP includes six major facilities. These facilities are the Low-Activity Waste (LAW) Vitrification Facility, the High-Level Waste (HLW) Vitrification Facility, the Pretreatment Facility, the Analytical Laboratory (Lab), the Direct-Feed Low-Activity Waste Effluent Management Facility (EMF), and the Balance of Facilities (BOF).

The WTP manages mixed and dangerous wastes using tank systems, containment buildings, container storage areas, and miscellaneous unit systems. The floors and lower portions of the black cells and hot cell walls are lined with stainless steel for secondary containment. Black cells and hot cells are equipped with an instrumented sump or sumps for leak detection. Liquids are removed from the black cell sumps by steam ejectors.

The WTP uses two separate waste process system configurations during mixed waste treatment operations. These configurations are the Baseline configuration, and the Direct Feed Low-Activity Waste (DFLAW) configuration.

### Baseline Configuration

In the Baseline configuration, characterized low-activity waste and high-level waste are sent directly from the Hanford Tank Farms to the Pretreatment Facility. The mixed waste is pretreated in the Pretreatment Facility and sent to either the HLW Vitrification Facility or the LAW Vitrification Facility for processing, depending on the waste characterization. Underground waste transfer lines allow for the transfer of waste from the Hanford Tank Farms to the Pretreatment Facility, and to and from the LAW Vitrification Facility, HLW Vitrification Facility, Lab, and other Treatment, Storage, and Disposal (TSD) Facilities.

The Pretreatment Facility, in the Baseline configuration, uses tank systems, miscellaneous unit systems (defined in Operating Unit Group 10, Section III.10.G of this Permit), and containment buildings to prepare waste feed from the Hanford Tank Farms for vitrification.

The LAW Vitrification Facility uses miscellaneous treatment unit sub-systems and equipment (defined in Operating Unit Group 10, Section III.10.H and III.10.I of this Permit), tank systems, and containment buildings to vitrify LAW feed.

The HLW Vitrification Facility uses miscellaneous treatment unit sub-systems and equipment (defined in Operating Unit Group 10, Section III.10.J and III.10.K of this Permit), tank systems, containment buildings, and container storage areas to vitrify HLW feed.

A tank system and a container storage area are used at the Lab. Container storage is used in the BOF for waste management activities.

### DFLAW Configuration

In the DFLAW configuration, treated low-activity waste from the Hanford Tank Farms Low-Activity Waste Pretreatment System (LAWPS) is transferred to the LAW Vitrification Facility via an underground waste transfer line. The LAWPS is permitted as a separate TSD Facility under the Hanford Site-Wide Dangerous Waste Permit (Site-wide DWP). The DFLAW configuration consists of the EMF, which includes the Direct Feed LAW EMF Process System (DEP), a dedicated ventilation system, and dedicated utilities, and underground waste transfer lines that allow for the transfer of waste to and from the LAW Vitrification Facility, Lab, and other TSD Facilities. The DFLAW configuration is independent of the Baseline configuration, and is only used prior to Pretreatment Facility startup and in the event of a prolonged Pretreatment Facility outage. The EMF uses tank systems and miscellaneous treatment unit sub-systems and equipment, defined in Operating Unit Group 10, Section III.10.M.

Waste Management

Waste management activities are discussed in the following sections and in Chapter 4D for the Pretreatment Facility, Chapter 4E for the LAW Vitrification Facility, Chapter 4F for the HLW Vitrification Facility, Chapter 4G for the EMF, Chapter 4H for the Lab, and Chapter 4I for the BOF.

Integrated Control Network

WTP operates an Integrated Control Network (ICN). The ICN provides a real-time control and data acquisition system platform responsible for the operation and control, and alarm management, of WTP processes during normal operating conditions. The ICN integrates the WTP control systems, such as the Process Control System (PCJ), the Mechanical Handling Control System (MHJ), and the Autosampling Control System (ASJ). The ICN includes network hardware devices (switches and routers), linking devices, computer servers, operating consoles and workstations, local operator interfaces, panels, enclosures, and an operating system software platform.

The WTP control systems serve as the controller logic that generate control outputs to the WTP processes, including, mechanical handling, autosampling, and ventilation. The control systems conduct various functions, including:

- Monitoring and/or controlling the electrical services
- Monitoring environmental and stack discharge equipment
- Controlling non-safety services and utilities.

The control systems send data to the ICN where it is passed to the plant information network. The plant information network is a network designed to store plant operating system data and information applicable to the WTP Dangerous Waste Permit (DWP). The following are examples of the plant information network capabilities:

- Capture and store information related to WTP DWP sample requests, sample statuses, and sample results.
- Capture and store information related to the tracking of dangerous/mixed waste containers throughout the facilities, from point of generation to off-site shipment; including containers located in permitted container storage areas, 90-day accumulation areas and satellite accumulation areas.

More information on the ICN and plant information network will be provided prior to the initial receipt of dangerous and/or mixed waste, as required in WTP DWP permit condition III.10.D.10.c.v.

### 4.1.1 Process Overview

In the DFLAW configuration, waste from the Hanford Tank Farms is pumped to the LAWPS where it is processed to meet contractual requirements for transfer of waste directly to the LAW Vitrification Facility. The LAWPS Facility is permitted as a separate TSD Facility under the Site-Wide DWP. After sampling the waste stream, and confirmation by the WTP that it meets LAW waste acceptance criteria, it is then pumped directly to the LAW Vitrification Facility.

In the Baseline configuration, the WTP will store and treat waste feed from the Hanford Tank Farms in the Pretreatment Facility. The Pretreatment Facility will separate the waste into two feed streams for the LAW and HLW Vitrification facilities. Feed from the Hanford Tank Farms is expected to be of four major waste feed types, or waste feed envelopes A, B, C, and D. For the DFLAW configuration, waste feed will come from waste feed envelope E. These waste feed envelopes are described as follows:

- Envelope A. This waste feed envelope will contain cesium at concentrations high enough to warrant removal of these radionuclides during pretreatment, to ensure that the Immobilized Low-Activity Waste (ILAW) glass will meet applicable requirements.

- Envelope B. This waste feed envelope will contain higher concentrations of cesium than envelope A. Cesium must be removed to comply with the ILAW specifications. This envelope may also contain concentrations of chlorine, chromium, fluorine, phosphates, and sulfates that are higher than those found in envelope A, which may limit the waste incorporation rate into the glass.
- Envelope C. This waste feed envelope will contain organic compounds containing complexed strontium and transuranics (TRU) that will require removal in a processing step unique to this waste envelope. As with envelopes A and B, cesium will also require removal in the pretreatment process to ensure that ILAW glass meets applicable requirements.
- Envelope D. HLW feed will be in the form of a slurry containing approximately 10 to 200 grams of unwashed solids per liter. The liquid fraction of the slurry will be separated from the solids and classified as envelope A, B, or C waste. The solid fraction will be envelope D waste.
- Envelope E. Direct feed from LAWPS, with a nominal sodium concentration of 5 to 8 molar.

The WTP treatment processes are designed to immobilize the waste constituents in a glass matrix by vitrification and to treat the offgas from the processes to a level that protects human health and the environment.

Two similarly designed vitrification systems are used in the WTP in the Baseline configuration. One system immobilizes the pretreated LAW feed and the second immobilizes the pretreated HLW feed. The dangerous waste constituents in the melter feed is destroyed, removed, or immobilized in a glass matrix through the vitrification process.

The ILAW and Immobilized High-Level Waste (IHLW) produced by the WTP will be in the form of glass. The glass is packaged in stainless steel containers for ILAW and stainless steel canisters for IHLW and placed in permitted TSD Facilities.

Secondary waste streams (e.g., dangerous and mixed solid waste, mixed waste and dangerous liquid effluents) are characterized and recycled into the treatment process, transported to permitted TSD Facilities located on the Hanford Site, or transported off-site, as appropriate.

Nonradioactive dangerous waste will also be generated by laboratory and maintenance activities. This waste will be managed at the WTP until it can be transferred to an off-site TSD unit. There are six primary components of the WTP: Pretreatment Facility, LAW Vitrification Facility, HLW Vitrification Facility, EMF, the Lab, and the supporting BOF systems and utilities. The following discussion presents an overview of these waste treatment processes and BOF systems at the WTP. Figure 4A-1 in Chapter 4A presents a simplified process flow diagram of the WTP treatment processes.

### Pretreatment

In the Baseline configuration, waste feed is stored and subsequently treated in the Pretreatment Facility prior to vitrification. The processes in the Pretreatment Facility conditions the waste feed and removes cesium, strontium, TRU compounds, and entrained solids. The waste feed is also processed through ultrafiltration to separate the solids.

There are four types of waste management units in the Pretreatment Facility:

- Container storage areas
- Tank systems
- Containment buildings
- Miscellaneous unit systems

The structure of the Pretreatment Facility is supported by a reinforced concrete foundation. The superstructure is made of structural steelwork with a metal roof. Typically, the process cells within the

Pretreatment Facility are constructed of reinforced concrete. Secondary containment is provided as required for tank systems and miscellaneous unit systems managing dangerous or mixed waste. Secondary containment consists of either stainless steel liners or special protective coatings. Table 4D-3 in Chapter 4D provides information on secondary containment. Figure 4A-2 and 4A-2A in Chapter 4A present simplified process flow diagrams of the pretreatment processes.

### LAW Vitrification Facility

The LAW Vitrification Facility will house the vitrification systems for production of the ILAW. Four types of waste management units will be located in the LAW Vitrification Facility, as follows:

- Container Storage Areas
- Tank systems
- Containment buildings
- Miscellaneous treatment unit sub-systems and equipment

The LAW Vitrification Facility is constructed of reinforced concrete and structural steelwork. The below-grade portion of the building structure is made of reinforced concrete, and the superstructure is made of reinforced concrete and structural steelwork with a metal roof. The LAW Vitrification Facility structure is supported by a reinforced concrete mat foundation.

Secondary containment is provided as required for tank systems and miscellaneous unit sub-systems and equipment managing dangerous or mixed waste. Secondary containment consists of either stainless steel liners or protective coatings. Table 4E-3 in Chapter 4E provides information on secondary containment**.** Figure 4A-3 in Chapter 4A presents a simplified process flow diagram of the LAW Vitrification Facility treatment processes.

### HLW Vitrification Facility

The HLW Vitrification Facility houses the vitrification systems for producing IHLW. Four types of waste management units are located in the HLW Vitrification Facility, as follows:

- Container storage areas
- Tank systems
- Containment buildings
- Miscellaneous treatment sub-systems and equipment

The HLW Vitrification Facility is constructed of reinforced concrete and structural steelwork. The lower elevations of the building structure are reinforced concrete construction, and the upper elevations made of structural steelwork with a metal roof. The HLW Vitrification Facility structure is supported by a reinforced concrete mat foundation. Secondary containment is provided as required for tank systems and miscellaneous unit sub-systems and equipment managing dangerous or mixed waste. Secondary containment consists of either stainless steel liner or protective coating. Table 4F-3 in Chapter 4F provides information on secondary containment. Figure 4A-4 in Chapter 4A presents a simplified process flow diagram of the HLW Vitrification Facility treatment processes.

### Direct Feed Low-Activity Waste Effluent Management Facility (EMF)

The EMF consists of four primary buildings: the LAW Effluent Process Building, the LAW Effluent Drain Tank Building, the LAW Effluent Electrical Building, and the LAW Effluent Utility Building. The EMF contains an evaporator system, nine major process vessels, two supporting reagent product storage tanks, HVAC equipment, and electrical utilities. The buildings are constructed of reinforced concrete and structural steelwork with a metal roof. The EMF structures are supported by a reinforced concrete mat foundation.

The EMF is designed with a minimum of a 48-hour effluent storage capacity, and includes underground waste transfer lines to transfer waste to and from the LAW Vitrification Facility, Lab, and other TSD Facilities. Secondary wastes generated by the EMF are managed as described in Chapter 4G.1

There are two types of waste management units in the EMF:

- Tank Systems
- Miscellaneous unit systems

Analytical Laboratory

The Lab houses the hot cells, laboratories, and systems for analyzing process samples and managing regulatory compliance samples. Two types of waste management units are located in the Lab:

- Container storage areas
- Tank systems

The Lab is constructed of reinforced concrete, structural steelwork, and a metal roof. The below-grade portions of the building structure are constructed of reinforced concrete. The Lab structure will be supported by a reinforced concrete mat foundation. Secondary containment is provided as required for tank systems managing dangerous or mixed waste. Secondary containment consists of either stainless steel liner or protective coating. Table 4H-2 in Chapter 4H provides information on secondary containment.

Balance of Facilities

The BOF includes support systems and utilities required for the waste treatment processes within the Pretreatment Facility, LAW Vitrification Facility, HLW Vitrification Facility, and the Lab. BOF support systems and utilities include, but are not limited to, heating and cooling, process steam, process water, chilled water, primary and secondary power supplies, and compressed air. The BOF also includes the Glass Former Reagent system (GFR) that supplies glass former reagents to the LAW and HLW Vitrification facilities. Regulated waste management units within the BOF include the HLW Failed Melter Storage Facility and the Nonradioactive Dangerous Waste Storage Area.

## 4.2 Tank Systems

This section contains descriptive information for each tank system used for managing mixed waste. The term “tank systems” refers to mixed waste storage or treatment tanks, including primary containment sumps, and their associated ancillary equipment and containment systems. Figures and permit drawings depicting design features of tank systems are found in DWP Operating Unit Group 10.

The following text uses the terms “vessel” and “tank”. The term “vessel” is an engineering term and denotes more robust construction than a typical mixed waste storage or treatment tank. The term “vessel” is included due to the use of the term in the American Society of Mechanical Engineers (ASME) codes and specifications that are followed for most tank construction at the WTP.

### 4.2.1 Design, Installation, and Assessment of Tank Systems

This section describes the attributes of tank systems containing mixed waste. Tanks and ancillary equipment containing only additives or reagents, such as glass-forming chemicals, precipitation reagents, or unused resin, are not regulated under the Resource Conservation and Recovery Act (RCRA) or the Washington State Dangerous Waste Program, and are therefore not included.

Tank systems containing mixed waste are designed to comply with worst-case scenarios, such as extreme pH, temperature, and pressure conditions. The WTP is entirely new construction, and there are no “existing tanks” in the plant.

Tank systems, with the exception of the two outside tanks at the Pretreatment Facility and the eight outside vessels at the EMF, are located indoors and within process cells, process rooms, or caves with controlled access.

#### 4.2.1.1 Design Requirements

Tanks

Most of the tanks that come in contact with the waste are operated under atmospheric pressure conditions at the WTP. The mixed waste tanks are designed, at a minimum, to *Boiler and Pressure Vessel Code* (ASME 2000), the American Petroleum Institute (API) codes, or other appropriate design codes. Tank integrity is reinforced by additional requirements of the tank group and seismic category assignment to each tank.

The vessels are designed for seismic loading in accordance with the *Uniform Building Code* (UBC) standard for Zone 2B (UBC 1997).

The codes and standards that are followed for design, construction, and inspection for the tanks are identified below, as applicable:

- ANSI American National Standards Institute
- API American Petroleum Institute
- ASME American Society of Mechanical Engineers
- ASNT American Society of Non-Destructive Testing
- ASTM American Society for Testing and Materials
- EPA US Environmental Protection Agency
- NACE National Association of Corrosion Engineers
- NBBPVI The National Board of Boilers and Pressure Vessel Inspectors
- OSHA Occupational Safety and Health Administration
- PFI Pipe Fabrication Institute
- UBC Uniform Building Code
- WRC Welding Research Council

Permit documents describing tank design requirements are located in DWP Operating Unit Group 10, Appendix 7.7:

- Specification for Pressure Vessel Design and Fabrication, 24590-WTP-3PS-MV00-T0001
- Seismic Qualification Criteria for Pressure Vessels, 24590-WTP-3PS-MV00-T0002
- Specification for Pressure Vessel Fatigue Analysis, 24590-WTP-3PS-MV00-T0003

Piping and Pipe Support Design

The design code of the WTP piping and pipe supports is ASME B31.3 Code (ASME 1996), as well as the United States Department of Energy (DOE) seismic requirements. In compliance with DOE seismic requirements (DOE 1996), response spectrum method, or UBC (UBC 1997) static method is used for the seismic analysis of the piping systems.

Additional information for piping and pipe support design is included in the following documents, which are included in DWP Operating Unit Group 10 Appendices as indicated:

- *Material for Ancillary Equipment*, 24590-WTP-PER-M-02-002 (Appendix 7.9)
- *Piping Material Class Description*, 24590-WTP-PER-PL-02-001 (Appendix 7.2)
- *Ancillary Equipment Pipe Support Design*, 24590-WTP-PER-PS-02-001 (Appendix 7.5)

#### 4.2.1.2 Physical Information for Tanks

Tables in Chapters 4D, 4E, 4F, 4G, and 4H list current tank design information (capacity, materials of construction, and dimensions). The tank systems are grouped by plant and process system.

Tank operation is generally automated. However, operator intervention can be used when human decisions or approval are required for initiation and termination of a process operation. Descriptions of tank system operation for major WTP process systems are identified in Chapters 4D, 4E, 4F, 4G, and 4H.

### 4.2.2 Ancillary Equipment Requirements

Information concerning ancillary equipment is provided in the following subsections.

#### 4.2.2.1 Transfer or Pressure Control Devices

Several fluid transfer devices are used in the WTP. These devices include mechanical pumps, reverse flow diverters, and steam ejectors. Breakpots and seal pots, although not fluid transfer devices, are an important component of vessel operations. These components are discussed in the following sections.

Mechanical Pumps

Mechanical pumps are used for operations that require high-flow pumps (such as through the evaporator circuits) or high-pressure head pumps (such as for pumping a waste stream through ultrafiltration circuits). Mechanical pumps are located in process cells, process rooms, or caves. In general, mechanical pumps are repaired in place, or removed to a maintenance area. However, remotely maintained pumps are used in areas where maintenance activities would result in a significant radiation dose to the operators.

For normal process operating sequences, mechanical pumps and associated valves are controlled by the process control system. In systems where off-normal conditions require pump shutdown, the design includes an alarm mechanism that also trips the transfer device. The pump system is designed to allow for the drainage of liquid from the pump, and for the introduction of flush liquids at the end of transfers to reduce residual contamination.

Reverse Flow Diverters

Reverse flow diverters provide for the maintenance-free pulsed or metered transfer of liquids or slurries throughout the treatment process. A reverse flow diverter does not need to be fully submerged in order to remove the contents of a vessel, and it maintains a small and predictable volume of tank contents following its use. Operation of the reverse flow diverter is cyclical, following timed phases: suction phase, drive phase, and blowdown. The following paragraphs describe a typical reverse flow diverter system arrangement.

*Suction phase:* In the suction phase, the secondary automatic valve A is open, admitting air to the suction jet pump. Valve B is shut and liquid is drawn from the supply tank through the reverse flow diverter and into the charge vessel. The suction ejector is designed so that it cannot produce a vacuum capable of lifting liquid higher than a certain valve known as the “suction lift”. After a short time, the liquid reaches this “suction lift” height and stops, then valve A is shut.

*Drive phase:* When valve A is shut, valve B is opened, admitting air to the drive nozzle. Air passes through the nozzle and pressurizes the charge vessel. Liquid is forced across the reverse flow diverter and into the delivery pipe. The delivery pipe is quickly filled with liquid that flows into the delivery vessel.

*Blowdown phase:* When the charge vessel is nearly empty, valve B is shut; no air is supplied to either jet pump. The compressed air in the charge vessel passes back through the paired jet pumps, down the vent pipe, and into vessel vent system.

Shortly after blowdown begins, the pressure in the charge vessel falls below the delivery head, and the flow of liquid into the delivery vessel is halted.

The liquid in the delivery vessel then falls back down the pipe, across the reverse flow diverter, and into the charge vessel. After a short time, the pressure in the charge vessel falls to zero (gauge). The cycle is now complete.

## Steam Ejectors

Steam ejectors are used to transfer process liquids, or to reduce the operating pressure of a system by gas removal. They empty liquid from vessels by means of suction lift, using a simple control system.

An automated control valve supplies high-pressure steam to the steam ejector. This steam accelerates through a nozzle, creating a differential pressure along a submerged suction leg within the vessel. The pressure than forces the liquid up the suction pipe. This effect is known as *striking*. The steam then conveys the liquid to the destination vessel, normally via a breakpot. Control is established using liquid level instrumentation in the vessel being emptied, and using a temperature indicator, such as a thermocouple, within the breakpot.

## Seal Pots

A seal pot is a type of hydraulic seal. A hydraulic seal is used primarily to maintain a separation between vessel vent or offgas systems for feed and receipt vessels. This separation is necessary to prevent migration of airborne contamination between the vessels. Without the seal, airflow could occur due to the different pressures in the vent systems. The seal is a slug of liquid in the interconnecting pipe work that remains after each liquid transfer is completed, blocking airflow between vessels.

The seal can be provided by constructing a simple “U” shape in the piping. Different piping arrangements are used for different purposes. A seal pot is a small vessel with one (inlet or outlet) pipe submerged in the liquid slug in the lower part of the pot, while the other pipe terminates in the top of the pot, above the static liquid level. The pot may be provided with a level indicator or alarm, if necessary, to ensure adequate liquid level. Periodic liquid additions may be needed to maintain the seal, especially if the pipeline is infrequently used.

## Breakpots

The main function of the breakpot is to reduce the amount of mixed waste material entrained into the vessel ventilation system. Breakpots are provided on transfer lines that use steam ejectors for moving liquids by pressure flow. These types of transfers create the potential for air entrainment of mixed waste contamination. Breakpots function to convert steam from pressure flow to liquid gravity flow, thereby reducing both the effluent loading on the downstream vessel ventilation treatment system and the mixed waste contamination levels in the vessel vent ductwork. Breakpots also serve a secondary purpose by providing a siphon break for other transfer systems where siphoning could occur.

Breakpots are typically placed at a high point in the discharge line from the steam ejector. Liquid is pumped into the breakpot through an inlet nozzle in its wall. The incoming liquid is directed towards a baffle. Within the baffle, noncondensed steam and gases disengage. The breakpot is self-draining; the liquid drains through the breakpot discharge pipe to the destination vessel.

A packed bed where disentrainment of the gas stream occurs is located above the inlet nozzle(s). The exiting gas from the packed section passes into the vessel ventilation system. The packed bed can be washed periodically using a wash ring permanently installed above the packed bed.

#### 4.2.2.2 Bulges

Bulges allow hands-on maintenance of equipment after process fluids are flushed from the bulge piping and components. Bulges provide shielding to personnel during process operation and allow vulnerable or failure prone components to be located outside the process environment. The cell wall provides shielding between the cell and the bulge interior. The bulge includes shielding and contamination control as needed, depending on the process fluid within the bulge piping.

A typical bulge consists of a metal frame attached to the outside wall of a process cell; the frame is used to support the piping and components as well as the shielding plates (usually steel), which are bolted to the frame. Bulges provide secondary containment for DWP ancillary equipment inside the bulge.

The ancillary equipment located inside the bulges are provided with leak detection or the bulge is provided with a drain line that flows to a sump equipped with leak detection. Leak detection can be provided internal to the bulge or in the sump associated with bulge drain line.

There are two classifications of bulges used at the WTP. One is a “process” bulge; the other is a “service” bulge. The process bulge contains valves, pumps, piping, etc. The service bulge contains valves used to transfer reagents, steam, etc., to the in-cell process equipment. The design of the two bulges is similar.

Bulges are equipped with several wash systems, facilitating washing both internal and external piping, components, and bulge confinement surfaces. Decontamination of the equipment internals and associated piping is achieved by externally connecting a flushing system located on the outside of the bulge. Wash fluids could be water or more aggressive media such as nitric acid, provided compatibility with the bulge materials is ensured.

Additional information on process bulges may be found in *Process Bulge Design and Fabrication* (24590-WTP-3PS-MX00-T0001), located in DWP Operating Unit Group 10, Appendix 7.7 and Chapter 4A, Figure 4A-127.

#### 4.2.2.3 Description of WTP Piping System

Detailed information on piping is included in *Piping Material Class Description* (24590-WTP-PER-PL-02-001), located in DWP Operating Unit Group 10, Appendix 7.2.

Interplant Piping Transfer Lines

In both the Baseline and DFLAW configurations, waste feed from the Hanford Tank Farms and the LAWPS will be transported to the WTP via underground waste transfer lines.

The waste feed transfer lines are double-walled pipe. The inner pipe is constructed of stainless steel, while the outer secondary containment pipe is constructed of carbon steel. The carbon steel outer pipe is coated with a fusion bonded epoxy (FBE) coating. In addition, the coated outer pipe for the waste transfer lines are surrounded by an injected closed-cell polyurethane foam insulation and a high-density polyethylene outer jacket. This extra layer of protective material isolates the waste transfer lines from soil.

The inner pipe is supported by guides, saddles, support keys, or anchors within the outer pipe. The inner pipe transports waste and maintains the pressure boundary, while the outer pipe provides secondary containment for the inner pipe. The piping system is buried under a minimum depth of soil for radiation shielding. The minimum depth of soil was finalized at the detail design phase and will not be less than the 2 feet (ft) freeze depth. A heat trace system is not required for pipes buried below freeze depth.

In the baseline configuration, the waste transfer lines between the Pretreatment Facility and the other WTP process plants do not have this extra barrier from the soil, but are cathodically protected as described later in this section. In the DFLAW configuration, the new effluent or process waste transfer lines between the LAWPS and the EMF, starting at the DOE interface point at the WTP property

boundary and ending at the LAW, and from the EMF back to the Hanford Tank Farms ending at DOE interface point at the WTP property boundary, utilize the High Density Polyethylene (HDPE) jacketed design to isolate the transfer lines from the soil environment. Similarly, the transfer lines between the LAW and EMF, the Lab and EMF, and the EMF to the intersection of the existing transfer line between the Pretreatment Facility and the LERF/ETF interface point, utilize the HDPE jacketed design. In the DFLAW configuration, the cathodically protected intra-facility piping system between the Pretreatment Facility and the other WTP facilities will be isolated, and not used. However, the cathodic protection system will remain operational even though wastes are not being managed in these process transfer lines.

A leak detection system is provided for each of the underground waste transfer lines. A leak detection alarm will send a signal to stop waste transfer pumps and terminate the transfer of waste feed.

The underground piping system has a continuous slope down toward the Pretreatment Facility from the Hanford Tank Farms in the Baseline configuration. In the DFLAW configuration all transfer lines slope to Leak Detection Boxes (LDBs) located in the LAW Effluent Drain Tank Building. The exception is the Liquid Effluent Retention Facility/Effluent Treatment Facility (LERF/ETF) transfer line LDBs which are located at the LERF/ETF interface point on the WTP property line. Released liquids resulting from leaks to the outer pipe will be removed as required by WAC 173-303-640(4)(b). The piping system is designed to allow water flushing to occur.

### Liquid Effluent Transfer Lines

In the Baseline configuration, liquid effluent generated at the WTP is routed to the Pretreatment Facility for recycling through the WTP and then transferred to the LERF and ETF for treatment and disposal.

To support the Baseline configuration two HDPE jacketed waste effluent lines are routed from the Pretreatment Facility to the LERF/ETF interface point located northwest of the EMF along the WTP property line. In the DFLAW configuration two HDPE transfer lines intersect the existing LERF/ETF transfer lines between the Pretreatment Facility and the interface point. In this configuration the transfer line between the Pretreatment Facility and the line intersection is isolated to prevent fluids from flowing to the Pretreatment Facility. The pipes have a continuous downwards slope towards the LERF/ETF. A leak detection system is provided for the LERF/ETF waste transfer lines at the LERF/ETF interface point.

### Intraplant Piping

Pipelines within the plants, associated with the tank systems located in process cells, black cells, bulges and pipe and pump pits, are typically single-walled pipelines. Secondary containment is provided by partially lined process cells, process rooms, or caves. Secondary containment to support unique processes is provided by pump and pipe pits, melter encasement assembly areas, and bulges or concrete ducts with liners at appropriate locations. The bulge or concrete ducts are provided with a low point which drains to process cells, process rooms, or caves. The leak detection equipment located within the process cells, process rooms, and caves provides warning of a piping leak through leak detection alarms.

Piping between plants and the two outdoor tanks at the Pretreatment Facility, and the eight EMF outdoor vessels, are double-walled, FBE-coated, insulated, HDPE-jacketed lines. The majority of the transfer lines are located below grade, and below the freeze line. The above ground segment of the lines to the associated vessels are insulated and heat traced to prevent freezing.

### Cathodic Protection

An impressed current cathodic protection system is used in the Baseline configuration for eliminating or mitigating corrosion on underground piping. The cathodic protection system maintains a negative pipe to soil potential on the protected pipe relative to a saturated copper/copper sulfate reference electrode.

The impressed current cathodic protection system uses direct current provided by a rectifier that is powered from the plant's normal 480 Vac power system. The direct current from the rectifier is connected across the buried anode wire and the protected pipe. The current flows from the anode wire,

which is positive, through the electrolyte, to the protected pipe, which is negative, and back to the rectifier completing the electrical circuit.

An annual survey, recommended by NACE International (formerly the National Association of Corrosion Engineers), is performed on the system provided with cathodic protection. Test stations are provided to permit potential measurements. Additional information on inspections is provided in Operating Unit Group 10, Chapter 6A.

The following waste transfer lines are provided with cathodic protection at the WTP. The waste transfer lines are double encased and constructed of materials that are compatible with the waste:

- Mixed waste transfer lines between the Pretreatment Facility and the HLW Vitrification Facility
- Mixed waste transfer lines between the Pretreatment Facility and the LAW Vitrification Facility
- Mixed waste transfer line between the Analytical Laboratory and the Pretreatment Facility

### Corrosion Protection

The following WTP waste transfer and effluent transfer lines that utilize FBE, thermal insulation, and an HPDE jacket, are isolated from soil moisture with an external water resistant barrier to provide corrosion protection:

- DOE waste feed pipelines from the Hanford Tank Farm interface point to the Pretreatment Facility
- Radioactive/dangerous waste effluent transfer lines from the Pretreatment to the ETF/LERF interface point
- Mixed waste transfer lines from the LAWPS to the EMF starting at the DOE interface point at the WTP property boundary and ending at the LAW Vitrification Facility
- Mixed waste transfer lines from the EMF back to the Hanford Tank Farms beginning at EMF and ending at the DOE interface point at the WTP property boundary
- Mixed waste transfer lines from the LAW Vitrification Facility to the EMF
- Mixed waste transfer lines from the Lab to the EMF
- Mixed waste transfer lines from the EMF to an intersection point on the existing transfer line from the Pretreatment Facility to the LERF/ETF interface point at the WTP property boundary

The incoming DOE waste feed pipelines that interface with the WTP pipelines are intentionally not cathodically protected. Consistent with the existing Hanford Tank Farm waste transfer design, transfer lines from the WTP interface point, the Waste Feed Receipt Process (FRP) transfer lines and the LERF/ETF effluent coaxial transfer lines are furnished with additional corrosion protection by the addition of an external water resistant barrier. This barrier isolates the lines from moisture in the surrounding soils and provides corrosion protection in lieu of cathodic protection.

The barrier consists of a 2-inch layer of sprayed or injected closed-cell polyurethane foam with an external jacket of extruded HDPE jacket with a minimum thickness of 140 mils. This barrier is located over the fusion bonded epoxy coated carbon steel outer encasement pipe which provides secondary containment for the inner stainless steel process line.

The incoming waste transfer lines are also bonded at the crossing of the plant service air piping between the Pretreatment Facility and the HLW Vitrification Facility on the opposite end (which is cathodically protected piping). This area is defined as the “zone of influence.” Bonding is provided to minimize stray electrical currents that may occur in the zone of influence.

#### 4.2.2.4 Description of Foundations

Tank systems containing mixed waste are located indoors in process cells or caves, which are an integral part of the Pretreatment Facility, Lab, the LAW Vitrification Facility, HLW Vitrification Facility, and the EMF. The exception being two outdoor Pretreatment Facility tanks and eight outdoor EMF vessels. Therefore, the design requirements of the tank systems are met by the structural integrity of the plants. WTP compliance with UBC seismic design requirements, found in DWP Operating Unit Group 10, Supplement 1, provides the seismic design requirements for the WTP. The outdoor tanks and vessels are located outside of the Pretreatment Facility and EMF on protectively-coated concrete pads and concrete berms. The concrete pads for these tanks are sufficient to support the tanks and vessels.

Additional information on the design criteria, load definitions, load combinations, and methodology for the structural design and analysis may be found in *Secondary Containment Design* (24590-WTP-PER-CSA-02-001), located in DWP Operating Unit Group 10, Appendix 7.5.

### 4.2.3 Integrity Assessments

Written Assessments of the adequacy of the design of tank systems and miscellaneous treatment systems are prepared on a system-by-system basis. Separate reports are prepared for tanks, tank system ancillary equipment, and associated secondary containment systems. Each assessment is reviewed and certified by an independent, qualified, registered professional engineer to attest that the tank and miscellaneous treatment systems are adequately designed for managing dangerous waste. Each assessment includes an evaluation of the foundation, structural support, seams, connections, pressure controls, compatibility of the waste with the materials of construction, and corrosion controls for each mixed waste management system, as appropriate. Integrity assessment reports are located in DWP Operating Unit Group 10, Appendix 8.11 for the Pretreatment Facility, Appendix 9.11 for the LAW Vitrification Facility, Appendix 10.11 for the HLW Vitrification Facility, and Appendix 11.11 for the Lab, and Appendix 13.11 for the EMF.

### 4.2.4 Additional Requirements for Existing Tanks

Tanks and vessels that are permitted in the WTP are newly constructed; pre-existing tanks will not be used. Therefore, the requirements of this section do not apply.

### 4.2.5 Additional Requirements for New Tanks

Tank system installation is performed in a manner designed to prevent damage to the tank system. The WTP uses an independent, qualified installation inspector, or an independent qualified registered professional engineer to perform tank system installation inspections. Inspection activities include testing tanks for tightness, verifying protection of ancillary equipment against physical damage and stress, and evaluating evidence of corrosion. The inspections document weld breaks, punctures, coating scrapes, cracks, corrosion, and other structural defects. Installation inspections conform to permit requirements and consensus-recognized standards. Inspection findings and corrective actions, as appropriate, are documented in post-inspection reports.

Additional information describing the installation of tank systems and associated inspections are provided in *Installation of Tank Systems and Miscellaneous Unit Systems*, 24590-WTP-PER-CON-02-001.

#### 4.2.5.1 Additional Requirements for New On-Ground or Underground Tanks

The majority of the tanks and vessels to be constructed in the WTP are located within the Pretreatment Facility, the Lab, the LAW Vitrification Facility, and the HLW Vitrification Facility. Therefore, the requirements of this section do not apply to the indoor tanks.

The two outdoor Process Condensate Tanks located at the Pretreatment Facility (RLD-TK-00006A/B), and the eight outdoor vessels at the EMF (DEP-VSL-00002, DEP-VSL-00003A/3B/3C, DEP-VSL-00004A/4B, and DEP-VSL-00005A/5B), are located within a bermed and lined secondary containment

system and are not be in direct contact with soil. The design of the outdoor tanks' concrete pad addresses backfill, soil saturation, seismic forces, and freeze thaw effects. A portion of the ancillary piping for the unit is in contact with the soil, and the effects of corrosion on the piping are addressed in the final design.

### 4.2.6 Secondary Containment and Release Detection for Tank Systems

This section provides information about the secondary containment for tank systems that contain mixed waste in the WTP. Descriptions of equipment and procedures used for detecting and managing releases or spills from tank systems are also provided.

A number of documents are provided in appendices to DWP Operating Unit Group 10 that provide detailed information regarding the design of the secondary containment system. These documents include the following:

- *Secondary Containment Design*, 24590-WTP-PER-CSA-02-001, located in Appendix 7.5
- Material Selection for Building Secondary Containment/Leak Detection, 24590-WTP-PER-M-02-001, located in Appendix 7.9
- *Leak Detection in Secondary Containment Systems*, 24590-WTP-PER-J-02-002, located in Appendix 7.5
- *Flooding Volume for PT Facility*, 24590-PTF-PER-M-02-005, located in Appendix 8.8
- *Flooding Volume for 28 Ft Level in PT Facility*, 24590-PTF-PER-M-03-001, located in Appendix 8.8
- Flooding Volume for 56 Ft Level in PT Facility, 24590-PTF-PER-M-04-001, located in Appendix 8.8
- Flooding Volume for 77 Ft Level in PT Facility, 24590-PTF-PER-M-04-0003, located in Appendix 8.8
- Flooding Volume for Room P-0150 in the PT Facility, 24590-PTF-PER-M-04-0008, located in Appendix 8.8.
- Flooding Volume for Room P-0119 in the PT Facility, 24590-PTF-PER-M-04-0005, located in Appendix 8.8.
- Flooding Volume for Room P-0123A in the PT Facility, 24590-PTF-PER-M-04-0007, located in Appendix 8.8.
- Dangerous Waste Permit (DWP) Liner Heights in the LAW Facility, 24590-LAW-PER-M-02-002, located in Appendix 9.8
- *Flooding Volume for the HLW Facility*, 24590-HLW-PER-M-02-003, located in Appendix 10.8
- Dangerous Waste Permit Liner Heights in the LAB Facility, 24590-LAB-PER-M-02-001, located in Appendix 11.8
- Leak Detection Capability in the Pretreatment Facility, 24590-PTF-PER-M-04-0010, located in Appendix 8.18
- Waste Removal Capability for the Pretreatment Facility, 24590-PTF-PER-M-04-0011, located in Appendix 8.18
- Leak Detection Capability in the Low Activity Waste Facility, 24590-LAW-PER-M-05-002, located in Appendix 9.18
- *Waste Removal Capability for LAW Vitrification*, 24590-LAW-PER-M-05-001, located in Appendix 9.18
- *Leak Detection Capability in the HLW Facility*, 24590-HLW-PER-M-04-002, located in Appendix 10.18

- *HLW Facility Waste Removal Capability*, 24590-HLW-PER-M-04-0001, located in Appendix 10.18
- Lab Minimum Leak Rate Detection Capabilities for Leak Detection Boxes, Cell Sumps, and Pit Sumps, 24590-LAB-PER-M-04-0001, located in Appendix 11.18
- LAB Waste Removal Capability for the Effluent Vessels Cells, 24590-LAB-PER-M-04-0002, located in Appendix 11.18
- System Logic Description for the Direct Feed LAW Effluent Management Facility Process System (DEP), 24590-BOF-PER-J-16-001, located in Appendix 13.13
- Leak Detection Capability for EMF Facility, 24590-BOF-PER-M-16-001, located in Appendix 13.18
- Waste Removal Capacity for the Direct Feed LAW Effluent Management Facility (EMF), 24590-BPF-PER-M-16-002, located in Appendix 13.18
- Dangerous Waste Permit (DWP) Liner Heights in the Effluent Management Facility (EMF), 24590-BOF-PER-M-16-003, located in Appendix 13.8

#### 4.2.6.1 Secondary Containment System Requirements

Most of the tank systems containing mixed waste are located within the plants, although two tanks are located outside the Pretreatment Facility, and eight vessels are located outside of the EMF. Tank systems containing mixed waste that are located within the plants are arranged within process cells, process rooms, caves, or other areas provided with secondary containment liners or coatings. The outside tanks and vessels are located on a bermed, concrete pad, provided with special protective coatings and covings or waterstops, or provided with stainless steel liners that provide secondary containment.

The secondary containment systems are designed, installed, and operated to prevent migration of waste or accumulated liquid to soil, groundwater, or surface water. The piping associated with the tank systems are located in the process cells, process rooms, caves, berms, or bulges. Secondary containment for piping systems is incorporated into the design.

Tank systems and wet miscellaneous treatment systems are provided with secondary containment that can contain 100% of the volume from the largest tank within the containment area. In the Pretreatment Facility, the 15 black cells and the hot cell at the 0’ (ft) elevation are interconnected through hydraulic connections (open penetrations that interconnect adjacent cells) such that the combined secondary containment volume is available, if necessary, to contain a 100% leak from the largest tank. A leak to the hot cell floor, if large enough, drains to the overflow vessels in the pit at -45’ (ft) elevation and ultimately to the -45’ (ft) pit secondary containment if the volume of the overflow vessel(s) is exceeded. Secondary containment areas lined with stainless steel have a gradient (minimum 1%) designed to channel fluids to a sump. In some cases, there may be more than a single sump. For example, the hot cell in the Pretreatment Facility has three instrumented sumps for leak detection. Fire suppression water is included as appropriate in determining the height of the secondary containment. Table 4D-3 in Chapter 4D, Table 4E-3 in Chapter 4E, Table 4F-3 in Chapter 4F, Table 4G-3 in Chapter 4G, and Table 4H-2 in Chapter 4H summarize the calculated minimum liner height at the four process plants and the Lab. The flooding volume documents identified above present the secondary containment height for each plant.

A concrete berm with protective coatings or stainless liners is used for the Pretreatment Facility and EMF outdoor tanks and vessels. These secondary containment areas are capable of holding 100% of the volume from the largest tank within the berm, plus the precipitation from a 25-year, 24-hour rainfall event, as required under WAC 173-303-640(4)(e)(i)(B).

The WTP uses selected industry standards to ensure secondary containment systems have sufficient strength, thickness, and compatibility with waste. The design includes an engineered structural base to

protect against failure resulting both from excess force applied during catastrophic events or settlement, and from the stress of daily operation.

In the event of a spill or release, the secondary containment design prevents released mixed waste from reaching the environment, and safely contains the waste until it can be transferred to an appropriate collection tank.

The following subsections provide detailed descriptions of typical secondary containment systems that will be used at the WTP.

### Process Cells

Process cells are located within process plants. Process cells are typically constructed of concrete walls to protect plant operators and the environment from radiological exposure and to prevent migration of waste or accumulated liquid to soil, groundwater, or surface water. Operator access to the process cells is not allowed during normal operations. However, access is allowed for certain areas within WTP for nonroutine operations such as equipment replacement or maintenance. Process cells are provided with liners and special protective coatings as required. Systems within process cells that manage mixed waste have secondary containment (for example, process vessels, and piping).

### Black Cells

A black cell is a type of process cell that may contain vessels, evaporators, and piping systems that are used to support process waste stream storage and blending functions. No active equipment (i.e., equipment with moving parts) components are located in the black cell. The design for the vessels and piping is all welded construction. Some instrumentation (e.g., thermocouples, radiation detectors) are remotely replaceable by insertion into sealed pipe wells. The black cell vessels and design do not possess design features for remote replacement. The black cell concept is used in areas where the risk of vessel or piping failure due to corrosion or erosion is low. The Pretreatment Facility contains fifteen black cells and the HLW Vitrification Facility contains three black cells.

### Hot Cell

Alternatively, a hot cell is a type of process cell that contains active equipment and periodically needs to be remotely accessed for equipment maintenance or replacement.

All process cells are provided with secondary containment as required. The floor is sloped to a collection sump to allow for collection and removal of accumulated liquid within the sump.

### Caves

Caves are located within process plants. Caves typically are constructed with concrete walls thick enough to protect personnel from exposure to mixed waste. Caves house mechanical handling equipment designed for remote operation and maintenance. They generally have viewing windows and closed circuit television to allow observation of the cave operations and for overseeing remote maintenance. The cave floors and portions of the walls are provided with secondary containment as required. The floor of the cave is sloped to a collection sump to allow for collection and removal of accumulated liquid within the sump.

### Berms

Concrete berms are used at the LAW Vitrification Facility for the Caustic Collection Tank (LVP-TK-00001). The berms are of sufficient structural strength and height to contain the 100% of the volume of the largest tank.

Vault-like structures are used for the two outdoor Process Condensate Tanks (RLD-TK-00006A/B) at the Pretreatment Facility, and the eight outdoor vessels at EMF (DEP-VSL-00002, DEP-VSL-00003A/B/C, DEP-VSL-00004A/B, and DEP-VSL-00005A/B). These vault-like structures are of sufficient structural

strength and height to contain the 100% of the volume of the largest tank plus, for the outdoor Process Condensate Tanks, the amount of precipitation that results from the 24-hour, 25-year storm event.

A protective coating is applied to the concrete pad and a portion of the berms and vault-like structures to prevent contaminant penetration into the concrete. The containment system is designed to allow for the discharge of storm water after visual or other testing.

### Drip Pan

The ancillary equipment/piping may be provided with a drip pan, sloped, or otherwise designed to perform the secondary containment functions, including leak detection. One such drip pan is located in the HLW Vitrification Facility Drum Transfer Tunnel (H-B015). Design details of the HLW drip pan are provided in the *Secondary Containment Design*, 24590-WTP-PER-CSA-02-001, located in Operating Unit Group 10 Appendix 7.5.

### LAW Melter Feed Line Encasement Assembly

The feed lines that transfer wastes from the LAW Melter Feed Process (LFP) system to the melters are housed in the LAW Melter Feed Line Encasement Assemblies (LMP-LDB-00001/00002). The encasement assemblies are a sloped bellows encasement that contains the feed line where they travel between the process cells and the melter gallery. The encasement assemblies are equipped with leak detection cables that run under the feed lines and into the bellows. The assemblies are equipped with drain lines to flow to sumps in the LAW process cells.

### Autosampling System (ASX) Samplers

The autosampling system (ASX) samplers in the Pretreatment Facility, HLW Vitrification, and LAW Vitrification facilities contain both upper and lower secondary containment liners and leak detection systems. The upper containment area is designed to collect a potential leak from the incoming sample feed and return lines where they connect to the ISOLOK® sampling device. If a leak occurs in the upper containment area, the leak flows to the sloped liner which diverts the leak to the annular space of the coaxial sample return lines. Leaks flow down the secondary containment pipe and discharge to secondary containment with leak detection, typically a sump with a radar level detector. The ASX sample feed and sample return lines, and the routing of potential leaks in the annular space of the return lines are shown on the associated process system piping and instrumentation diagrams (P&IDs) provided in Operating Unit Group 10, Appendix 8.2, 9.2, and 10.2.

The sloped stainless steel liner in the lower containment area is designed to divert liquids to a sloped collection trough. The trough contains a removable weir that allows liquids to collect and activate the thermal level detection switch and alarms to indicate that a leak has occurred. Effluent from a leak flows to the same drain line that manages ISOLOK flush solutions. The ISOLOK flush lines terminate below the top of the trough drain to ensure that the leak detection system is not activated when flushing the ISOLOK. The ASX lower containment area drain lines are shown on the associated process system P&IDs provided in Operating Unit Group 10, Appendix 8.2, 9.2, and 10.2.

### Sump and Leak Detection Boxes and Secondary Containment Drain Systems

Sumps, leak detection boxes, and secondary containment drain systems for the four process plants and the Lab are listed in Table 4D-4 in Chapter 4D, Table 4E-4 in Chapter 4E, Table 4F-4 in Chapter 4F, Table 4G-4 in Chapter 4G, and Table 4H-3 in Chapter 4H and described in the following sections. Systems monitor and collect liquids managed in the system. Sumps, leak detection boxes, and secondary containment drains are provided with a stainless steel liner or equivalent to act as the secondary containment. The sumps and leak detection boxes within the process areas provide a low point for each secondary containment. The sumps and leak detection boxes serve the following functions:

- Low point containment.
- Removal of material by means of sump emptying ejectors or pumps.
- Sampling of sump contents by means of sump sampling ejectors.

The following sections describe the type of sump used at the WTP and the secondary containment drains.

## Sumps and Leak Detection Boxes

Sumps and leak detection boxes are part of the secondary containment system provided for tank systems and wet miscellaneous treatment systems. Sumps and leak detection boxes are located at a low point in the secondary containment systems, and are equipped with leak detection instrumentation and corresponding alarm. Mechanical or fluidic pumps are used to remove liquid that may accumulate in a sump or leak detection box.

A typical sump design is shown in *Secondary Containment Design*, 24590-WTP-PER-CSA-02-001, located in Operating Unit Group 10 Appendix 7.5. Design details of each sump and leak detection box, such as the sump size, capacity, level detection instrumentation and pumps or ejectors are included in Table 4D-4 in Chapter 4D, Table 4E-4 in Chapter 4E, Table 4F-4 in Chapter 4F, Table 4G-4 in Chapter 4G, and Table 4H-3 in Chapter 4H and shown on the P&IDs for the Radioactive Liquid Waste Disposal (RLD) and/or Plant Wash and Disposal (PWD) systems, located in Operating Unit Group 10 Appendices 8.2, 9.2, 10.2, and 11.2.

Four sumps located in the HLW Vitrification Facility Melter Cave 1 and 2 (HSH-SUMP-00003/7/8/9) are equipped with stainless steel sump baskets. Sump baskets capture and retain small objects which may be inadvertently dropped into the sump, and prevent them from entering the piping. The baskets are provided with a lifting bail for the crane to remove from the sump and handles for the power manipulator to empty into a waste bucket. A typical sump basket design is shown in *Secondary Containment Design*, 24590-WTP-PER-CSA-02-001, Figure 10, located in Operating Unit Group 10 Appendix 7.5. Sump baskets are also identified on the P&IDs for the HLW RLD system, located in Operating Unit Group 10 Appendix 10.2. Sumps in the Pretreatment Facility, LAW, Lab and EMF are provided with screened or perforated covers to prevent small objects from falling into, or accumulating in the sump. An example of a typical sump screened cover is shown *Secondary Containment Design*, 24590-WTP-PER-CSA-02-001, Figure 20, located in Operating Unit Group 10 Appendix 7.5.Secondary Containment Drains

Many of the bulges, the autosamplers, and some process areas have secondary containment drains. This type of liquid collection system is located in a low spot in the cell formed by the sloping floor. Liquid detection instrumentation is provided for the secondary containment drains. Collected liquids gravity-drain to a collection vessel with a tank level indicator. The managed liquids could be waste released from a tank system, including ancillary equipment, or water used to wash the exterior of tanks or the walls of the containment area. Design details of each secondary containment drain/drain line are included in Table 4D-4 in Chapter 4D, Table 4E-4 in Chapter 4E, Table 4F-4 in Chapter 4F, Table 4G-4 in Chapter 4G, Table 4H-3 in Chapter 4H and shown on the P&IDs for the RLD and/or PWD systems, located in Operating Unit Group 10 Appendices 8.2, 9.2, 10.2, and 11.2.

## Design Requirements

The process cells, process rooms, or caves with mixed waste vessel or tank systems will be partially lined with stainless steel or special protective coating, which will cover the floor and extend up the sides of the process cell or cave to a height that can contain 100 percent of the volume from the largest tank within the process cell or cave. Table 4D-3 in Chapter 4D, Table 4E-3 in Chapter 4E, Table 4F-3 in Chapter 4F, Table 4G-4 in Chapter 4G, and Table 4H-2 in Chapter 4H present the calculated minimum secondary containment liner height at the four process plants and the Lab.

A concrete berm with special protective coatings or stainless liner are used for the Pretreatment Facility and EMF outdoor tanks and vessels. These secondary containment areas are capable of holding 100% of

the volume from the largest tank within the berm, plus the precipitation from a 25-year, 24-hour rainfall event, as required under WAC 173-303-640(4)(e)(i)(B).

The WTP uses consensus-recognized standards to ensure that the process cells, process rooms, caves, or berms provide secondary containment with sufficient strength, thickness, and compatibility with waste. The design includes an engineered structural base to protect the cells, caves, berms and tank systems against failure resulting both from excess force applied during catastrophic events or settlement, and from the stress of daily operation. In the event of a spill or release, the structural and foundation design for tank and process cells, process rooms, caves and berms prevents released mixed waste from reaching the environment, and safely contains the waste until it can be transferred to an appropriate collection tank.

#### 4.2.6.2 Management of Release or Spill to Sump and Secondary Containment Drain Systems

The WTP uses dry sumps and leak detection boxes as part of the secondary containment and leak detection systems. Sumps and leak detection boxes are instrumented to inform the operator to investigate the cause of the liquid detected in the sump or leak detection box. Secondary containment systems are sloped to direct flow of leaks or spills to the sump or leak detection box. To remove liquid from the sumps or leak detection boxes in a timely fashion, sumps and leak detection boxes are equipped with mechanical or fluidic pumps.

A detection alarm indicating that there is liquid in the sump or leak detection box will be investigated to determine if the alarm is valid. If the alarm is valid, the incident will be corrected. Mixed waste released from the primary system and collected in a sump or leak detection box will be removed within 24 hours, or in as timely a manner as possible. If the released material cannot be removed within 24 hours, the Washington State Department of Ecology (Ecology) will be notified.

#### 4.2.6.3 Additional Requirements for Secondary Containment

The WTP dangerous waste storage tanks have vault-type secondary containments that have either chemical-resistant water stops and special protective coatings or the following configurations that the Department of Ecology has approved as equivalent to a coating/water stop system:

- An impermeable interior coating that is compatible with the stored waste and a polymeric filler material at interior corners and construction joints that performs a function equivalent to a water stop.
- A welded stainless steel liner attached to walls and floors.

Ancillary equipment such as piping is addressed within Section 4.2. Other types of ancillary equipment such as pumps, seal pots, and reverse flow diverters are provided with secondary containment. Inspection of ancillary equipment is addressed in Operating Unit Group 10, Chapter 6.0.

### 4.2.7 Variances from Secondary Containment Requirements

No variances from secondary containment requirements are sought for the WTP tank systems. Tank systems are provided with secondary containment as identified in the flooding volume documents described in the previous sections.

### 4.2.8 Tank Management Practices

The following provides the basic philosophy for the WTP vessel overflow systems. Three types of barriers exist to prevent overfill of process equipment: preventive controls, detectors, and regulators. Preventive controls promote controlled filling within normal process ranges. Detectors recognize if a vessel is being overfilled and alert an operator. Lastly, if preventive controls and detectors fail to stop overfill from occurring, regulators trip a control sequence that stops inflow and/or initiates outflow. The principal design concept to control vessel overflow is to prevent an overflow from occurring. The

engineering design minimizes the likelihood of tank, ancillary equipment, and containment system overflows, and over-pressurization, ruptures, leaks, corrosion, and other failures.

In general, overflows are prevented by inventory control in conjunction with level monitoring. The fluid levels in a vessel are maintained within low- and high-level ranges. Appropriate alarm settings are used to note deviations from the designed settings. Automatic trip action is designed to shut down feed to the vessel when the high-level settings are exceeded. These automatic trip actions are provided for vessels with the potential for high operational and environmental impact in case of an accident or release.

Most of the WTP tank systems are designed to incorporate minimal or zero maintenance requirements and are based on a design life of approximately 40 years. The design emphasis of zero maintenance minimizes the likelihood of spills and overflows in the tank systems. In the event that the process controls fail to prohibit vessel overfilling, engineered overflows are provided to prevent liquid from entering the vessel ventilation systems. Vessels that are nominally operating at atmospheric pressure have a suitable gravity or engineered overflow system, unless an overflow can be shown not to be possible. Vessels or systems that normally operate at above atmospheric pressures are not be provided with overflows.

The following principles apply when designing an engineered overflow system:

- The overflow system for vessels must be instantaneously and continuously available for use.
- Overflowed process streams must be returned to the waste treatment process.
- Overflow systems must meet the requirements of WAC 173-303, *Dangerous Waste Regulations*, Section 640, Tank Systems. In meeting these requirements, overflowing direct to the cell floor is only considered as the last overflow in a cascaded system. Where an overflow is from a vessel to the cell, the overflow system maintains segregation of the cell and vessel ventilation systems. The compatibility of the overflowing liquid and the recipient vessel is considered.
- A vessel overflow line is sized to handle the maximum inflow to the vessel without the liquid level in the overflowing tank reaching an unacceptably high level. No valves or other restrictions are permitted in the overflow line. This line is also designed to prevent the buildup of material that could cause blockages.
- The overflow receiver is sufficiently sized to contain the overflow.
- Inspections are performed on the various tank and overflow systems, using the example schedules described in DWP Operating Unit Group 10, Chapter 6A.

### 4.2.9 Labels or Signs

Tanks managing mixed or dangerous waste are labeled according to the requirements of DWP permit conditions DWP III.10.E.5.e, for routinely non-accessible tanks, and DWP III.10.E.5.f, for tanks not addressed in DWP III.10.E.5.e. The labels inform employees and emergency personnel of the types of waste present, warn of the identified risks, and provide other pertinent information.

### 4.2.10 Air Emissions

This section describes air emissions from vessel ventilation systems and reverse flow diverter exhausts. Organic emissions from vents associated with evaporator or distillation units are also discussed.

#### 4.2.10.1 Tank System Emissions

Most of the tanks are connected to a vessel ventilation system to collect vapors. Vessel vents are located on process vessels and tanks, breakpots, and other small vessels. Exhaust from reverse flow diverters and pulse jet mixers are also collected.

#### 4.2.10.2 Process Vents

The air emission regulations, specified under WAC 173-303-690 and 40 CFR 264 Subpart AA, apply to process vents associated with distillation, fractionation, thin-film evaporation, and air or steam stripping operations that manage mixed waste with total organic carbon concentrations of at least 10 parts per million by weight. The WTP does not use these regulated processes; therefore, this regulation does not apply to the WTP.

#### 4.2.10.3 Equipment Leaks

Regulations provided in WAC 173-303-691 and 40 CFR 264 Subpart BB contain the "Air Emission Standards for Equipment Leaks". These air emission standards do not apply to the WTP because waste feed entering the WTP contains less than 10% total organic carbon by weight and is excluded under 40 CFR 264.1050(b).

#### 4.2.10.4 Tanks and Containers

The regulations specified under WAC 173-303-692 and 40 CFR 264 Subpart CC do not apply to the WTP mixed waste tank systems and containers. These tanks and containers qualify as waste management units that are "used solely for the management of radioactive dangerous waste in accordance with applicable regulations under the authority of the Atomic Energy Act and the Nuclear Waste Policy Act" and are excluded under 40 CFR 264.1080(b)(6). Containers bearing nonradioactive, dangerous waste, such as maintenance and laboratory waste, that is not excluded under 40 CFR 264.1080 (b)(2) or 40 CFR 264.1080(b)(8), will comply with the tank and container standards specified under 40 CFR 264 Subpart CC.

### 4.2.11 Management of Ignitable, Reactive and Incompatible Waste in Tanks

In the Baseline configuration, mixed waste from the Hanford Tank Farms is initially designated as both ignitable (D001) and reactive (D003). The D001 and D003 waste numbers are as described in the waste analysis plan in DWP Operating Unit Group 10, Appendix 3A. The Pretreatment Facility process vessels are located in a manner that meets the National Fire Protection Association (NFPA) buffer zone requirements for process vessels, as contained in Tables 2-1 through 2-6 of the *NFPA-30 Flammable and Combustible Liquids Code* (NFPA 1981). The process vessels are designed to store the waste in such a way that it is protected from materials or conditions that could cause the contents to ignite or react. Vessel contents will be constantly mixed and will be actively vented to process stacks, which will be equipped with vapor collection and treatment systems that will manage emissions. Further information on waste numbers is contained in DWP Operating Unit Group 10, Appendix 3A.

In the DFLAW configuration, the treated low-activity waste received from LAWPS will not demonstrate the characteristics of ignitable or reactive waste.

Ignitable or reactive waste may be generated from laboratory or maintenance activities. This waste is accumulated and managed in compliance with regulatory requirements, in approved containers. Potentially incompatible waste generated from laboratory or maintenance activities will not be stored in the tank systems.

A potential for incompatibility may exist, for example when nitric acid is used to elute waste components from ion-exchange column resins that were previously regenerated with sodium hydroxide. To minimize a reaction, water flushes are performed between batches.

Process reagents that could react with waste in the tank systems are stored in areas that are separated by physical barriers from process tanks. Potentially incompatible wastes generated from laboratory or maintenance activities will not be stored in proximity to each other in the tank systems.

## 4.3 LAW and HLW Miscellaneous Treatment Sub-Systems [WAC 173-303-680 and WAC 173-303-806(4)(i)]

The LAW vitrification system and HLW vitrification system consist of the vitrification melters, offgas treatment equipment, and associated equipment. The melters immobilize mixed waste in a glass matrix. The LAW vitrification system and the HLW vitrification system contain two melters each. The following sections provide additional information on the vitrification systems.

Other miscellaneous treatment sub-systems, and their associated process control features, are described in Section 4.2.

### 4.3.1 Melter Capacity and Production

For the melters, throughput is defined on the basis of quantity of glass waste produced. In turn, the quantity of glass waste produced depends on the degree to which the feed can be incorporated into the glass matrix. The maximum design throughput of the LAW Melter systems is approximately 15 metric tons per day of glass waste for each melter and approximately 30 metric tons per day. The production rate of the HLW Melters is approximately 3 metric tons per day for each melter and approximately 6 metric tons per day throughput.

### 4.3.2 Description of Melter Units [WAC 173-303-806(4)(i)(i)]

The LAW Melter systems are located in the melter galleries and the HLW Melters are housed within the melter caves as depicted in the general arrangement plan and section permit drawings, which are found in DWP Operating Unit Group 10, Appendix 9.4 for the LAW Vitrification Facility and Appendix 10.4 for the HLW Vitrification Facility. The following subsections provide detailed descriptions of the melter units.

Low-Activity Waste Melter Units

Figure 4A-48 in Chapter 4A provides a sketch of a LAW Melter. Each LAW Melter (LMP-MLTR-00001/2) is a rectangular shell, lined with refractory material. An additional outer steel casing with access panels is provided to enclose the LAW Melter. This outer steel casing is designed to provide local shielding and containment. Each LAW Melter has a nominal design capacity of approximately 15 metric tons of glass waste per day. Each has a molten glass surface area of approximately 107 square feet ($ft^2$). Each of the two LAW melters has external dimensions of approximately 31 × 21 × 16 ft high, and weighs approximately 295 metric tons empty and 318 metric tons with glass. The operating temperature of the melter is between 1050°C and 1200°C.

The locally shielded LAW Melter (LMP-MLTR-00001/2) is operated and maintained in a personnel access area. The melter is maintained at a lower pressure than the surrounding room to prevent escape of contaminants. Consumable melter parts are replaced through access panels. The melters are transported in and out of the gallery on a rail system. A transporter moves the melters to and from the LAW Vitrification Facility.

The melter refractory package is designed to serve as a mechanical, thermal, and electrical barrier between the molten glass residing in the melter and the melter shell. The refractory package is housed in a steel shell and provides containment for the molten glass. Active cooling on the outside of the refractory package is provided by water jackets. The water jackets are in the intermediate loop of a two-loop system that transfers heat from the LAW Melter through heat exchangers to cooling towers. The intermediate loop containing the water jacket is a closed system that isolates the water circulating through the water jacket from the water in the cooling water loop circulating to the cooling tower. Mixed waste material leaking into the intermediate loop cooling water is prevented from becoming an inadvertent discharge via the cooling tower. The refractory package provides adequate containment if there is a temporary loss of cooling. Penetrations in the melter system are sealed using appropriate

gaskets and flanges. This system is designed for plenum temperatures of up to 1,100°C. The LAW melter lid is composed of steel and refractory material layers.

Each LAW Melter (LMP-MLTR-00001/2) uses two independent discharge chambers. An air lift pumps molten glass from the bottom of the melter pool, through a riser, into a discharge chamber, and pours it into an ILAW container. The ILAW is then allowed to cool, forming a highly durable borosilicate glass waste form within the container.

Spent LAW Melters are initially be managed within the LAW melter gallery containment building unit. Spent LAW Melters are removed from the melter gallery and transported using a transport and rail system. If necessary, the melter exterior surfaces will be decontaminated prior to transfer to a Hanford Site TSD unit.

### High-Level Waste Melter Units

Figure 4A-27 in Chapter 4A provides a sketch of an HLW Melter. In addition, the HLW melter mechanical assembly drawings (24590-HLW-MF-HMP-00001/2/3) are located in Operating Unit Group 10, Appendix 10.6. Each HLW Melter (HMP-MLTR-00001/2) is a rectangular shell, lined with refractory material. They have four compartments: a glass tank, two discharge chambers, and a plenum just above the glass tank. The tanks are lined with refractory material designed to withstand corrosion by molten glass.

The HLW Melter systems consist of two melters. Each HLW Melter (HMP-MLTR-00001/2) is designed for glass production rates up to 3 metric tons per day (MTG/d). The normal operating temperature of the melter is between 950°C and 1250°C. The HLW Melters have a molten glass surface area of approximately 40 $ft^2$. The HLW Melters have external dimensions of approximately 11 ft high × 14 ft deep × 14 ft wide. The glass contained in a full HLW Melter has a volume of approximately 145 $ft^3$ and weighs approximately 9.1 metric tons. An entire melter, including the supporting structure and transport mechanism, weighs approximately 90 metric tons empty and approximately 99 metric tons full.

The HLW Melters (HMP-MLTR-00001/2) are designed to be remotely operated and maintained. Remote maintenance is performed by a power manipulator, overhead crane, and auxiliary hoist, or by through-wall master-slave manipulators. The melter is positioned within the HLW Vitrification Facility for ease of access and viewing of both discharge chambers during operations, and for viewing access to the melter lid to facilitate removal and replacement of subcomponents, if needed. A rail and bogie transport system facilitates remote removal and replacement of the entire melter structure.

The HLW Melters (HMP-MLTR-00001/2) uses a refractory package similar to the LAW melter to contain the molten glass. The refractory package is designed to serve as a mechanical, thermal, and electrical barrier between the molten glass inside the melter and the melter shell.

The HLW Melters also use an outer shell, which, with the refractory package, contains the molten glass and melter offgas. Active cooling on the exterior of the melter is provided by a water jacket, which is in a two-loop system that transfers heat from the HLW Melter through heat exchangers to cooling towers. The loop containing the water jacket is a closed system that isolates the water circulating through the water jacket from the water in the cooling water loop circulating to the cooling tower. Mixed waste material leaking into the intermediate loop cooling water is prevented from becoming an inadvertent discharge through the cooling tower. The refractory package provides adequate containment should there be a loss of cooling. The HLW Melter lid is constructed of a steel outer shell and insulated from the melter plenum by refractory material.

The HLW Melter uses two independent discharge chambers. Discharge is achieved by transferring the molten glass from the bottom of the melter pool, through a riser, and then poured into a stainless steel IHLW canister. Glass waste transfer is accomplished through air lifting. The IHLW is then be allowed to cool, forming a highly durable borosilicate glass waste form.

Spent HLW Melters are removed from the melter cave and placed in an overpack. The spent melter is treated as newly generated waste, and is initially managed within the HLW melter containment buildings. If necessary, the overpack will be decontaminated using a dry process. Failed HLW Melters are stored in the failed melter storage building.

### 4.3.3 Automatic Waste Feed Cut-Off System

The LAW and HLW Melters are equipped with the ability to cut off waste feed. Automatic waste feed cut-off systems terminate feed to the Melter if a specified operating condition is exceeded. This design approach is consistent with the WAC 173-303-680 regulatory requirements.

The LAW (LMP-MLTR-00001/2) and HLW (HMP-MLTR-00001/2) Melters are fed via air displacement slurry pumps that utilize pressurized air as the motive force. These pumps supply feed to the melters in slugs that act to keep lines from plugging. The feed is injected into the melters through the feed nozzles on top of the Melter creating a “cold cap”, where waste feed undergoes several physical and chemical changes. The glass product in the melter is then “air lifted” through the discharge chamber and into the glass container. Melter offgas is generated from the vitrification of LAW and HLW of which the rate of generation is dynamic and not steady state. The offgas is then carried away and treated via a dedicated offgas system.

The melter systems are designed to minimize the need for automatic waste feed cut-off functions. Control of melter level and plenum pressure, process alarming, and optimized operating procedures are in place to reduce the occurrences of interlocking. Given the processing speeds and the relatively slow rates of change in the operating states of the melter, operators should have adequate time to react to upset conditions. An example of the slow rate of change can be seen in the volume of feed per air displacement slurry pump feed cycle when increasing melter level. Each pump cycle adds approximately one gallon of slurry into the melter. At one gallon of volume, the liquid level rises no greater than 0.01 inch inside the melter. This provides ample time for operator response.

Previous operating experience with similar melter systems has shown the following operating conditions warrant automatic waste feed cut off:

- Maximum melter chamber pressure
- Minimum off-gas temperature at the thermo catalytic oxidizer bed inlet
- Maximum carbon bed adsorber bed temperature
- Maximum stack gas flow rate
- Maximum stack gas carbon monoxide

These interlocks have been sufficient to allow continued melter operations without inadvertent feed cut off signals, yet provide a sufficient safety margin.

### 4.3.4 Offgas Treatment System

The offgas treatment system treats or removes steam, aerosols, entrained particulates, decomposition products, and volatile contaminants that are generated from the vitrification processes and the vessel ventilation systems. The typical constituents contained in the melter offgas stream are as follows:

- Nitrogen oxides from decomposition of metal nitrates in the melter feed.
- Chloride, fluoride, and sulfur as oxides, acid gases, and salts.
- Entrained feed material and glass.

A detailed description of the current offgas treatment trains for the LAW (LMP-MLTR-00001/2) and HLW (HMP-MLTR-00001/2) Melters is provided in Chapter 4E and Chapter 4F, respectively.

### 4.3.5 Miscellaneous Unit Emissions Performance

The WTP melter systems are thermal treatment units classified as miscellaneous units in Washington Administrative Code (WAC 173-303-680). The dangerous waste regulations require that permits for miscellaneous units include such terms, conditions, and provisions that are necessary to protect human health and the environment and are appropriate for the miscellaneous unit being permitted. Ecology has determined that regulations that are most appropriate to apply to the melters and offgas systems (melter systems) are found in the tank requirements (WAC 173-303-640) and applicable sections of the incinerator requirements (WAC 173-303-670) and 40 CFR Section 63.1203. As applied to the melter systems, the tank regulations primarily provide requirements for structural integrity, material compatibility, secondary containments, etc.

The incinerator regulations primarily provide operational requirements for parameters such as temperature, pressure, feed rate, demonstration testing, and performance standards, etc. Ecology determined and incorporated into the final WTP Dangerous Waste Permit issued in September 2002 the standards specified in 40 CFR Section 63.1203 in the following table apply to the WTP melter system miscellaneous units.

| Miscellaneous Unit Emissions Performance Standards | |
|---|---|
| **Pollutant** | **Ecology-directed requirement** |
| PODC | 99.99% DRE |
| Dioxins and Furans | 0.20 ng TEQ/dscm |
| Mercury | 45 μg/dscm |
| Lead and Cadmium | 120 μg/dscm, combined emissions |
| Arsenic, Beryllium, Chromium | 97 μg/dscm, combined emissions |
| Carbon Monoxide and Hydrocarbons | Carbon monoxide not in excess of 100 ppmv over an hourly rolling average, dry basis, and hydrocarbons not in excess of 10 ppmv over an hourly rolling average, dry basis, and reported as propane, at any time during the DRE test runs or their equivalent, or hydrocarbons not in excess of 10 ppmv, over an hourly rolling average, dry basis, and reported as propane |
| Hydrochloric Acid and Chlorine Gas | 21 ppmv, combined emissions, expressed as hydrochloric acid equivalents, dry basis |
| Particulate Matter | 34 mg/dscm |
| • PODC is Principle Organic Dangerous Constituent<br>• TEQ is dioxin/furan toxicity equivalence defined in 40 CFR 63.1201(a)<br>• dscm is dry standard cubic meter<br>• ppmv is parts per million by volume<br>• Rolling average is the average of all 1- minute averages over the averaging period [40 CFR 63.1201(a)] | |

DOE intends that the melter systems be designed and constructed so that they operate in compliance with the appropriate and applicable standards. Environmental performance demonstrations during cold commissioning of the HLW and LAW Vitrification facilities are used to verify compliance with the Destruction and Removal Efficiency (DRE) and other applicable air emission standards. The final WTP Dangerous Waste Permit issued in September 2002 also requires periodic demonstration testing be performed after the WTP has begun processing radioactive wastes (Ecology, 2001).

### 4.3.6 Physical and Chemical Characteristics of Waste [WAC 173-303-680(2)(a)(i)]

A description of the waste characteristics of the LAW and HLW feeds is presented in DWP Operating Unit Group 10, Chapter 3.0 (see Appendix 3A). The immobilized waste generated by the vitrification processes is in the form of glass that maintains its chemical and physical integrity during long-term storage. The Waste Analysis Plan (Appendix 3A) describes the types and frequency of analysis that will be performed on the glass waste.

### 4.3.7 Environmental Performance Standards for Melter Systems [WAC 173-303-680(2)]

An environmental performance demonstration will be conducted to demonstrate the efficiency of the LAW and HLW Melter systems and their respective air pollution control systems. Emissions from the LAW and HLW systems will be sampled and analyzed during an environmental demonstration performed during cold commissioning. The data developed during the environmental performance demonstration supports the screening-level risk assessment, which supports the development of environmental performance standards for the LAW and HLW Melter systems.

The operational activities of the WTP include methods intended to ensure proper performance of equipment and processes. These methods include sampling of materials, use of direct process controls, development of equipment life specifications and ongoing maintenance.

#### 4.3.7.1 Protection of Groundwater, Subsurface Environment, Surface Water, Wetlands and Soil Surface [WAC 173-303-680(2)(a) and (b)]

The LAW Melters are located in the LAW Melter Gallery (L-0112) within the LAW Vitrification Facility. The HLW Melters are located in the HLW Melter Caves (H-0117, H-0106) within the HLW Vitrification Facility. Both plants are designed to comply with standards that ensure protection of the surface and subsurface environments. The vitrification plants are completely enclosed and are designed to have sufficient structural strength and corrosion protection to prevent collapse or other structural failure. In addition, the melter systems, melter feed systems, and related piping are provided with secondary containment, to minimize the potential for release. The LAW melter gallery (L-0112) and the HLW melter caves (H-0117, H-0106) will be permitted as containment buildings and are described in Chapter 4E and Chapter 4F, respectively.

Floors within the vitrification plants are protected in a manner consistent with the intended usage of the space. The floor and portions of the walls of HLW Melter cave are partially lined with stainless steel. Nonradioactive materials usage areas requiring heavy equipment have concrete floors with hardener and sealer finishes.

The *Hanford Facility Dangerous Waste Permit Application General Information Portion*, Section 5.4 (DOE-RL 1998), provides climatological data, topography, hydrogeological and geological characteristics, groundwater flow quantity and direction, groundwater quality data, and surface water quantity and quality data for the area around the WTP.

#### 4.3.7.2 Protection of the Atmosphere [WAC 173-303-680(2)(c)]

A risk assessment is performed to evaluate the impacts of the WTP emissions on human and ecological receptors. Actual offgas emissions is measured during an environmental performance demonstration that is performed as part of the WTP commissioning activities. The data is used during a screening-level risk assessment that is performed to determine ecological and human health risk. The emissions data and the results of the screening level risk assessment are used to establish operating conditions for the melters that do not endanger human health and the environment.

### 4.3.8 Treatment Effectiveness Report [WAC 173-303-806(4)(i)(iv)]

A treatment effectiveness report evaluating the performance of the miscellaneous treatment sub-systems, and their effectiveness in treating the LAW and HLW, will be located in DWP Operating Unit Group 10,

Appendix 9 for LAW and Appendix 10 for HLW. The report uses the results of the environmental performance demonstration and the risk assessment activities to document treatment effectiveness of miscellaneous treatment sub-systems.

### 4.3.9 Approach to Risk Assessment [WAC 173-303-680(2)(c)(i) through (vii)]

A screening level risk assessment is being conducted to evaluate any possible human health and ecological risk posed by the thermal treatment of mixed wastes. The risk assessment provides information about the potential terrestrial, aquatic, and food pathways for exposure of human and ecological receptors to dangerous waste constituents. This risk assessment presents the quantitative methods, detailed assumptions, and numerical parameters that are used to estimate the nature, extent, and magnitude of potential risks from operation of the WTP. The primary regulatory guidance followed for this risk assessment is found in the *Human Health Risk Assessment Protocol for Hazardous Waste Combustion Facilities* (EPA 1998a) and the *Screening-Level Ecological Risk Assessment Protocol for Hazardous Waste Combustion Facilities* (EPA 1999a)

Treated air emissions through the stack are the only planned direct releases into the environment from the WTP. Other waste streams are transferred to a permitted facility and are not released directly into the environment. Thus, the overall risk assessment process focuses primarily on air emissions.

Major components of the human health and ecological risk assessment process for evaluating airborne emissions are as follows:

- Risk assessment work plan
- Pre-demonstration test risk assessment
- Final risk assessment

The overall approach for the risk assessment is to identify potential risks associated with various receptors, their locations, exposure pathways, and activity patterns in two broad exposure scenarios, as follows:

- Plausible exposure scenario
- Worst-case exposure scenario

The plausible exposure scenarios are based on where potential receptors currently exist or may reasonably be expected to exist within the foreseeable future. The worst-case assumptions are based on locations of maximum concentration even though it is not expected that such receptors will ever actually exist at these locations. Both scenarios will reflect current uses of the surrounding land and habitat and reasonable assumptions about future uses of the land and habitat.

During the environmental performance demonstration, emission samples are collected and analyzed, and the data used to evaluate risk to the human population and ecological (such as wildlife) receptors. Operating conditions are established for the WTP, which limit risks to human health and the environment to acceptable levels.

## 4.4 Other Waste Management Units

Sections 4.4.1 through 4.4.5 discuss the applicability of the requirements for waste management units that have not been discussed up to this point in the permit. Sections 4.4.6 through 4.4.9 describe the applicability of air emission controls, waste minimization, groundwater monitoring, and functional design requirements to the WTP. References to other sections of the permit are provided as appropriate.

### 4.4.1 Waste Piles

The operation of the WTP does not involve the placement of dangerous waste in waste piles. Therefore, the requirements of WAC 173-303-660, “Waste Piles”, do not apply to the WTP.

### 4.4.2 Surface Impoundments

The operation of the WTP does not involve the placement of dangerous waste in surface impoundments. Therefore, the requirements of WAC 173-303-650, “Surface Impoundments”, do not apply to the WTP.

### 4.4.3 Incinerators

The WTP does not include a dangerous waste incinerator. However, applicable sections of the incinerator requirements in WAC 173-303-670, and 40 CFR Section 63.1203 apply to the WTP.

### 4.4.4 Landfills

The operation of the WTP does not involve the placement of dangerous waste in landfills. Therefore, the requirements of WAC 173-303-665, “Landfills”, do not apply to the WTP.

### 4.4.5 Land Treatment

The operation of the WTP does not involve the land treatment of dangerous waste. Therefore, the requirements of WAC 173-303-655, “Land Treatment”, do not apply to the WTP.

### 4.4.6 Air Emissions Control

Information regarding air emissions control is provided in the following sections:

- Pretreatment Facility Vessel Vent Process and Exhaust System (PVP/PVV) - Chapter 4D, Section 4D.4.2
- LAW Vitrification Facility offgas treatment system description - Chapter 4E, Section 4E.4.2
- HLW Vitrification Facility offgas treatment system description - Chapter 4F, Section 4.2
- Direct Feed LAW Effluent Management Facility Vessel Vent Process System (DVP) – Chapter 4G, Section 5.1
- Process vents (40 CFR 264 Subpart AA) - Section 4.2.10.2
- Equipment leaks (40 CFR 264 Subpart BB) - Section 4.2.10.3
- Tanks and containers (40 CFR 264 Subpart CC) - Section 4.2.10.4

### 4.4.7 Waste Minimization

Waste minimization information is presented in Operating Unit Group 10 of the permit.

### 4.4.8 Groundwater Monitoring for Land-Based Units

The groundwater monitoring requirements found in WAC 173-303-645, "Releases from regulated units", do not apply to the WTP, since it is not operated as a regulated dangerous waste surface impoundment, landfill, land treatment area or waste pile, as defined in WAC 173-303-040. Therefore, groundwater monitoring is not required.

### 4.4.9 Functional Design Requirements

The WTP will be designed to comply with applicable design codes and specifications. The documents referenced in this chapter appendices and contained in DWP Operating Unit Group 10 identify the codes and standards to which the WTP system, structures, and components are being constructed.

This page intentionally left blank.

# WASTE TREATMENT AND IMMOBILIZATION PLANT
# CHAPTER 4A
# FIGURES AND DRAWINGS

## CHANGE CONTROL LOG

Change Control Logs ensure that changes to this unit are performed in a methodical, controlled, coordinated, and transparent manner. Each unit addendum will have its own change control log with a modification history table. The "**Modification Number**" represents Ecology's method for tracking the different versions of the permit. This log will serve as an up to date record of modifications and version history of the unit.

Modification History Table

| Modification Date | Modification Number |
|---|---|
| 09/05/2017 | 8C.2017.6F |
| 08/2012 | |
| | |

This page intentionally left blank.

# CHAPTER 4A
# FIGURES AND DRAWINGS

This page intentionally left blank.

# CHAPTER 4A
# ENGINEERING FIGURES

The figures listed below are included in this chapter, and are to be used in conjunction with the text in the Dangerous Waste Permit (DWP) Chapter 4.

Figure 4A-1 WTP Simplified Flow Diagram ..... 5
Figure 4A-2 Primary Pretreatment Process Systems ..... 6
Figure 4A-2A Primary Pretreatment Process Systems (Continued) ..... 7
Figure 4A-3 Primary LAW Vitrification Systems ..... 8
Figure 4A-4 Primary HLW Vitrification Systems ..... 9
Figure 4A-11 Cesium Resin Addition Process System (CRP) ..... 10
Figure 4A-21 LAW Melter Process System (LMP) ..... 11
Figure 4A-24 LAW Container Finishing Handling System (LFH) ..... 12
Figure 4A-27 HLW Melter Process System (HMP) ..... 13
Figure 4A-38 Typical Tank System – Cesium Ion Exchange Column ..... 15
Figure 4A-48 Typical System - LAW Melter Process System (LMP) ..... 17
Figure 4A-53 Typical Tank System – HLW Melter Feed Process System (HFP) ..... 18
Figure 4A-59 Typical System - Containment Building (Sheet 1) ..... 19
Figure 4A-59 Typical System - Containment Building Typical Design Features Crosswalk (Sheet 2) ..... 21
Figure 4A-65 Simplified General Arrangement Pretreatment - Plan at El. 98 ..... 25
Figure 4A-118 Schematic of an Example IHLW Container and Label ..... 26
Figure 4A-119 Schematic of an Example ILAW Container and Label ..... 27
Figure 4A-120 Typical Arrangement of a Reverse Flow Diverter ..... 29
Figure 4A-121 Basic Reverse Flow Diverter Design ..... 31
Figure 4A-122 Typical Arrangement of a Steam Ejector System ..... 33
Figure 4A-123 Typical Seal Pot Arrangement ..... 34
Figure 4A-124 Typical Breakpot Arrangement ..... 35
Figure 4A-127 Typical Bulge Configuration ..... 36
Figure 4A-128 Typical Primary Containment Sump Conceptual Design ..... 37

This page intentionally left blank.

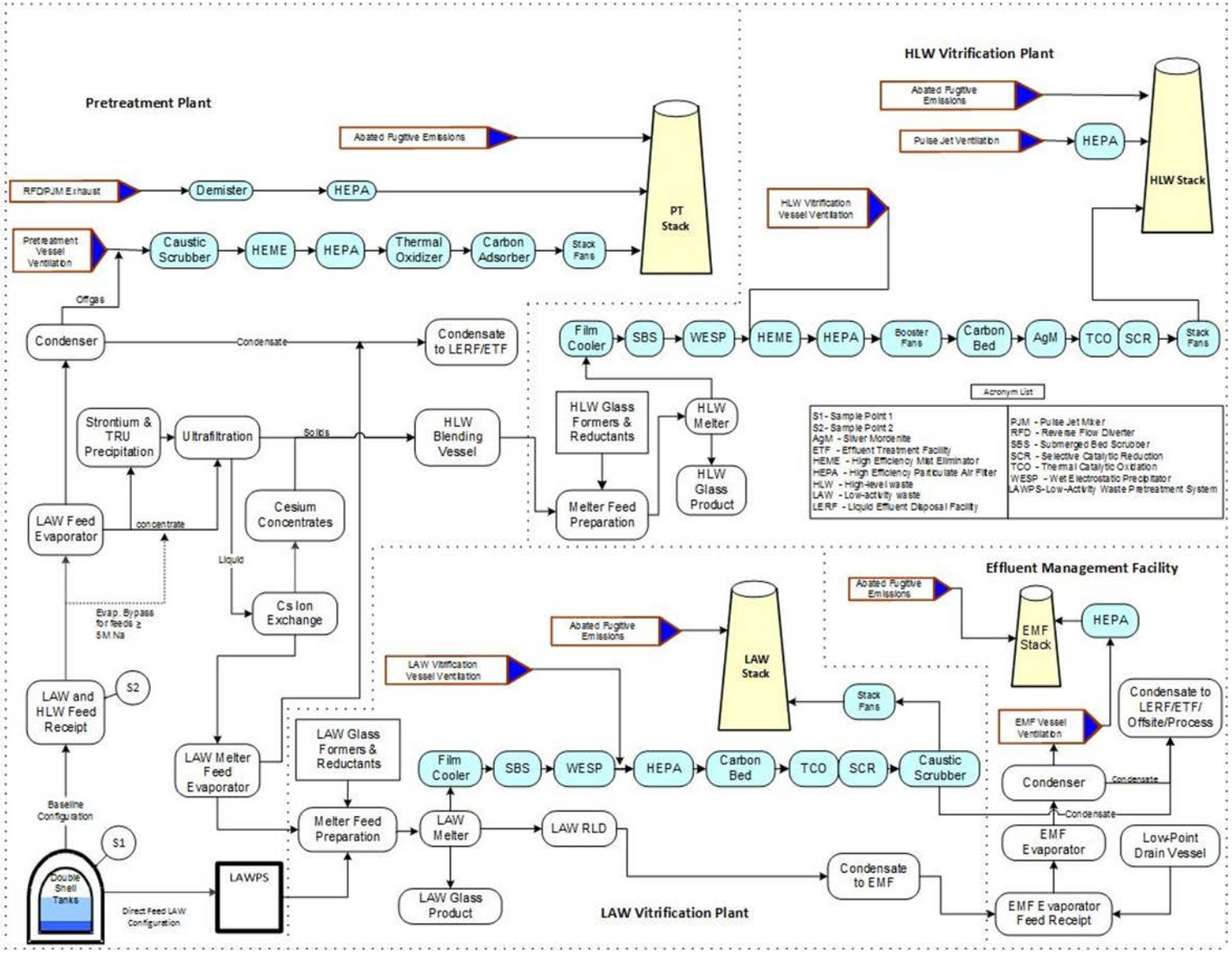


**Figure 4A-1 WTP Simplified Flow Diagram**

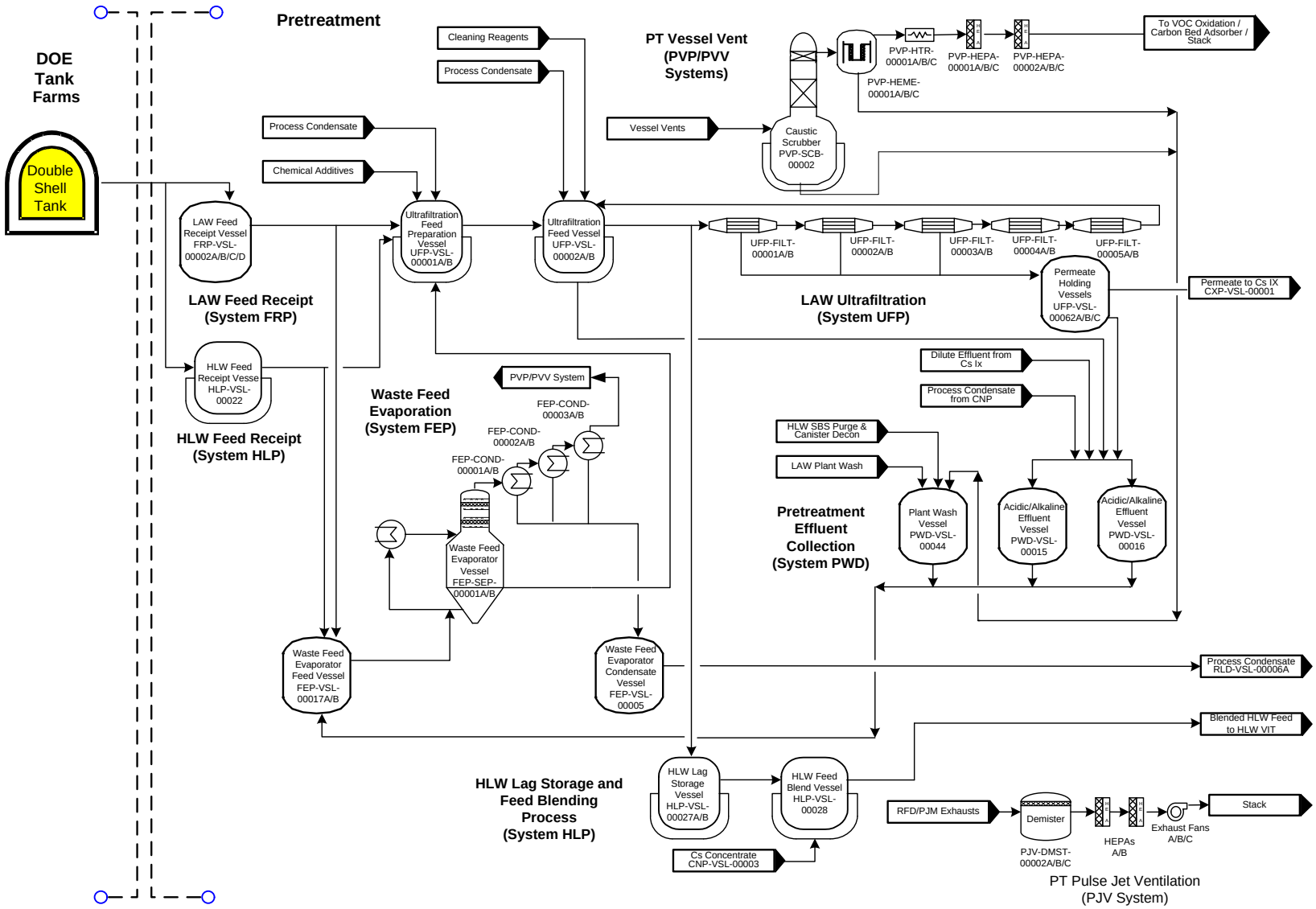


**Figure 4A-2 Primary Pretreatment Process Systems**

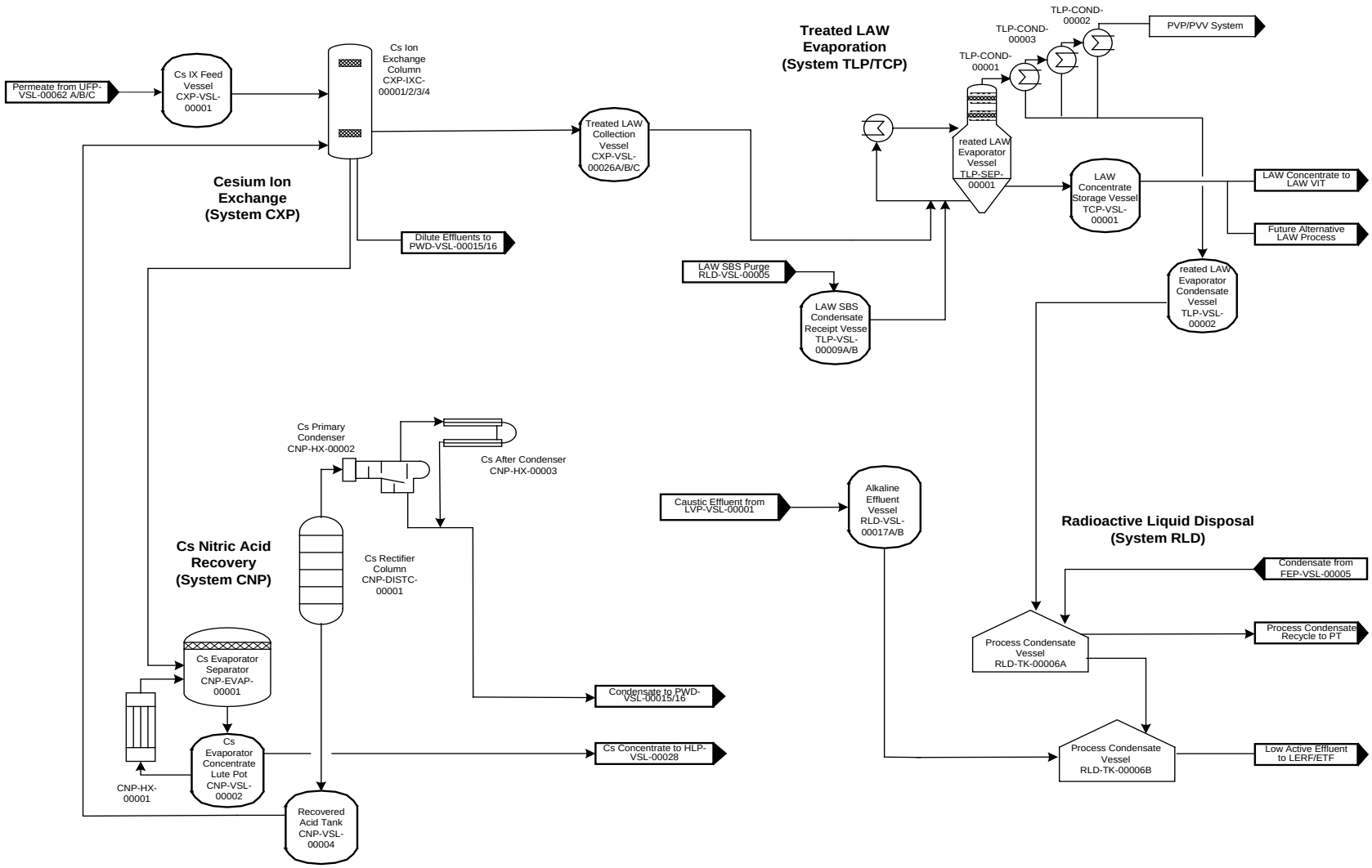


**Figure 4A-2A Primary Pretreatment Process Systems (Continued)**

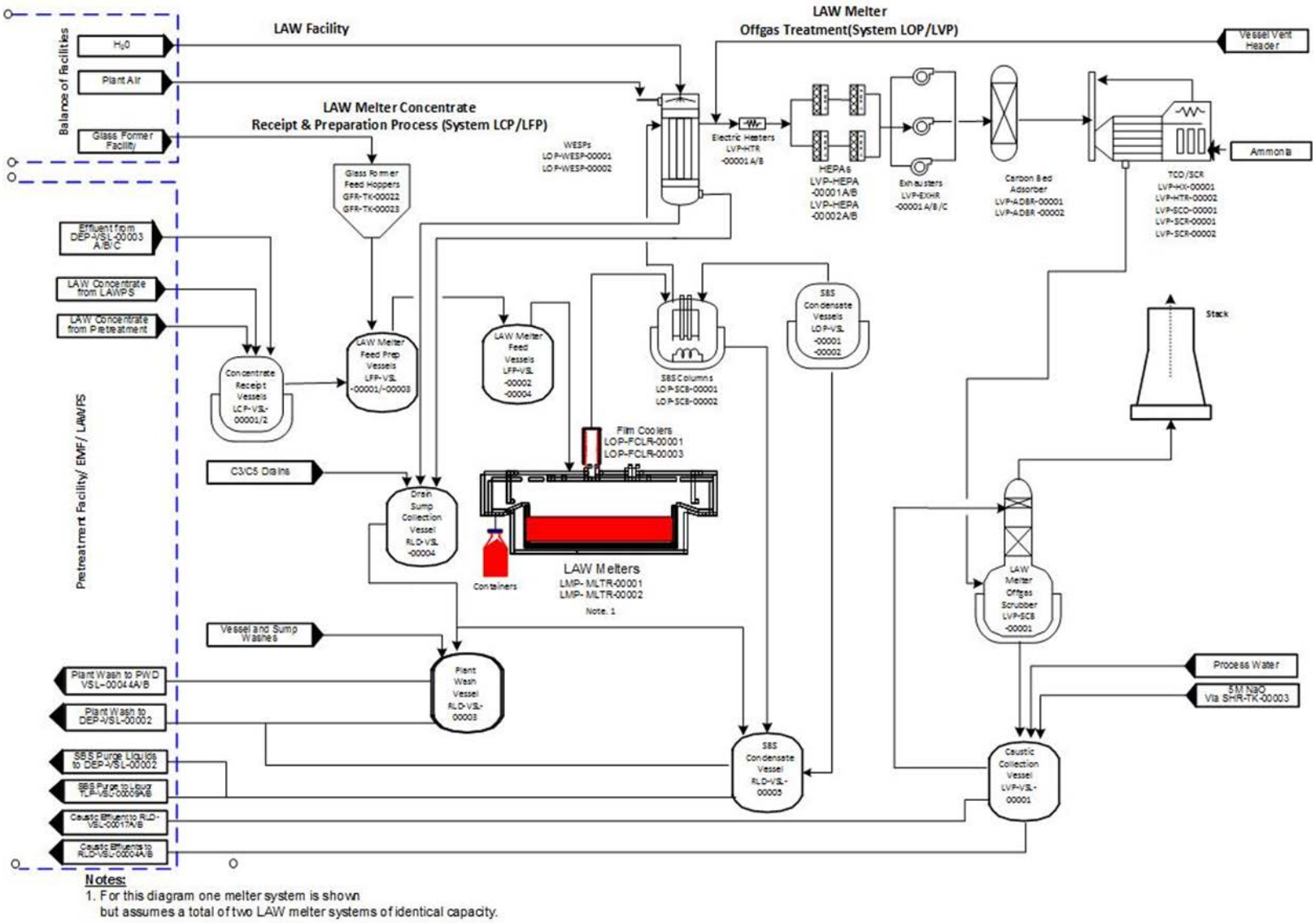


**Notes:**

1. For this diagram one melter system is shown but assumes a total of two LAW melter systems of identical capacity.

**Figure 4A-3 Primary LAW Vitrification Systems**

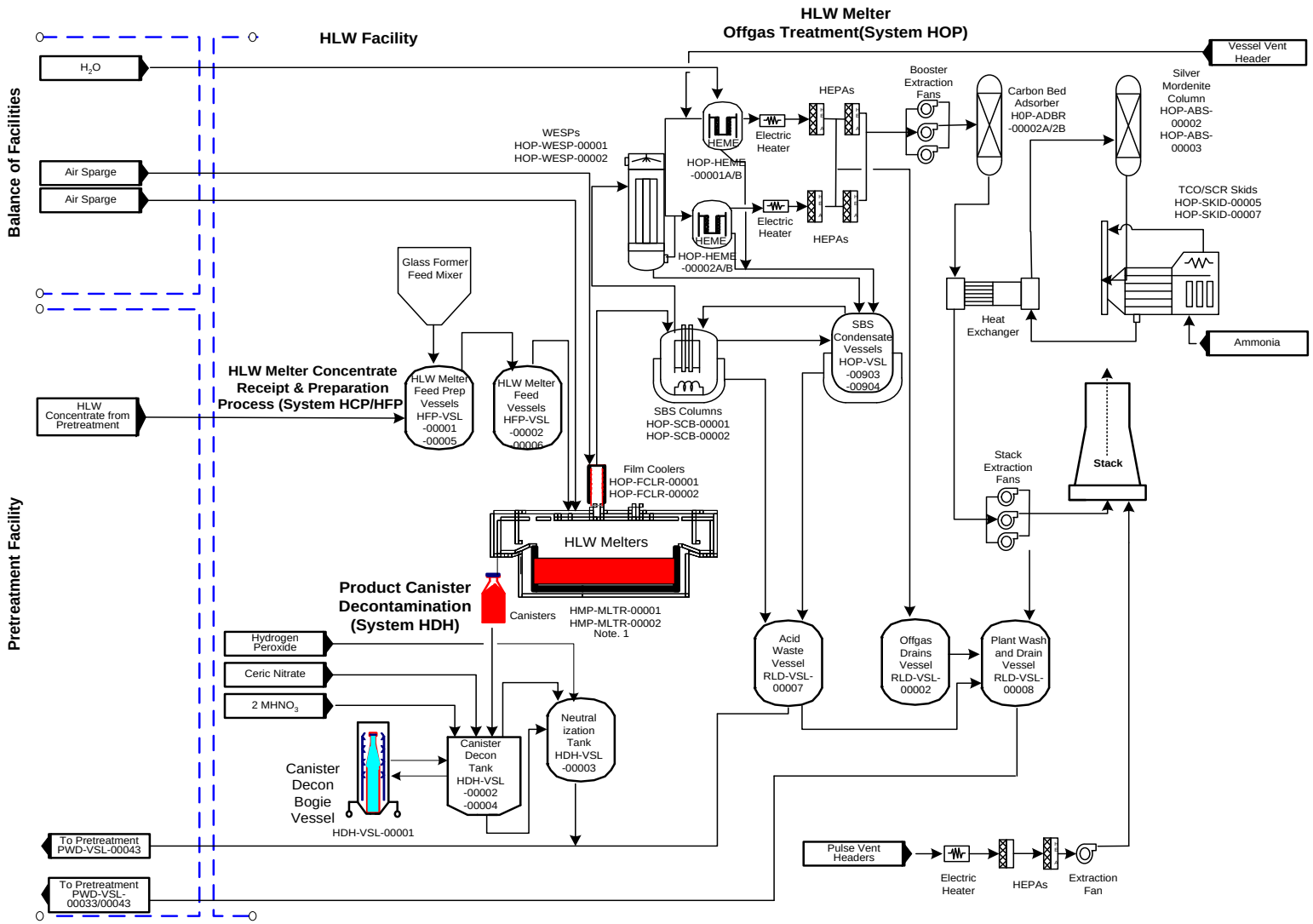


**Figure 4A-4 Primary HLW Vitrification Systems**

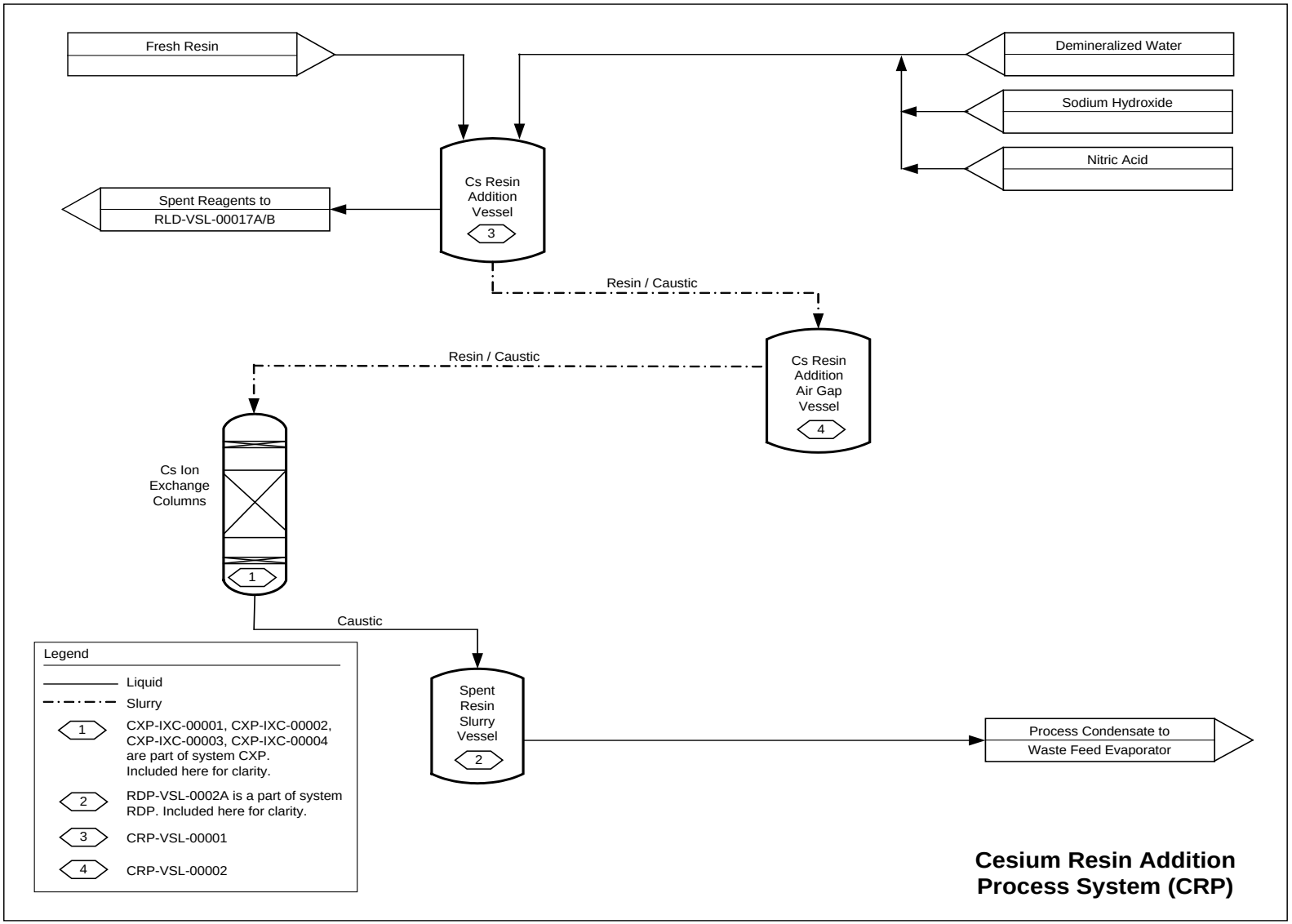


**Figure 4A-11 Cesium Resin Addition Process System (CRP)**

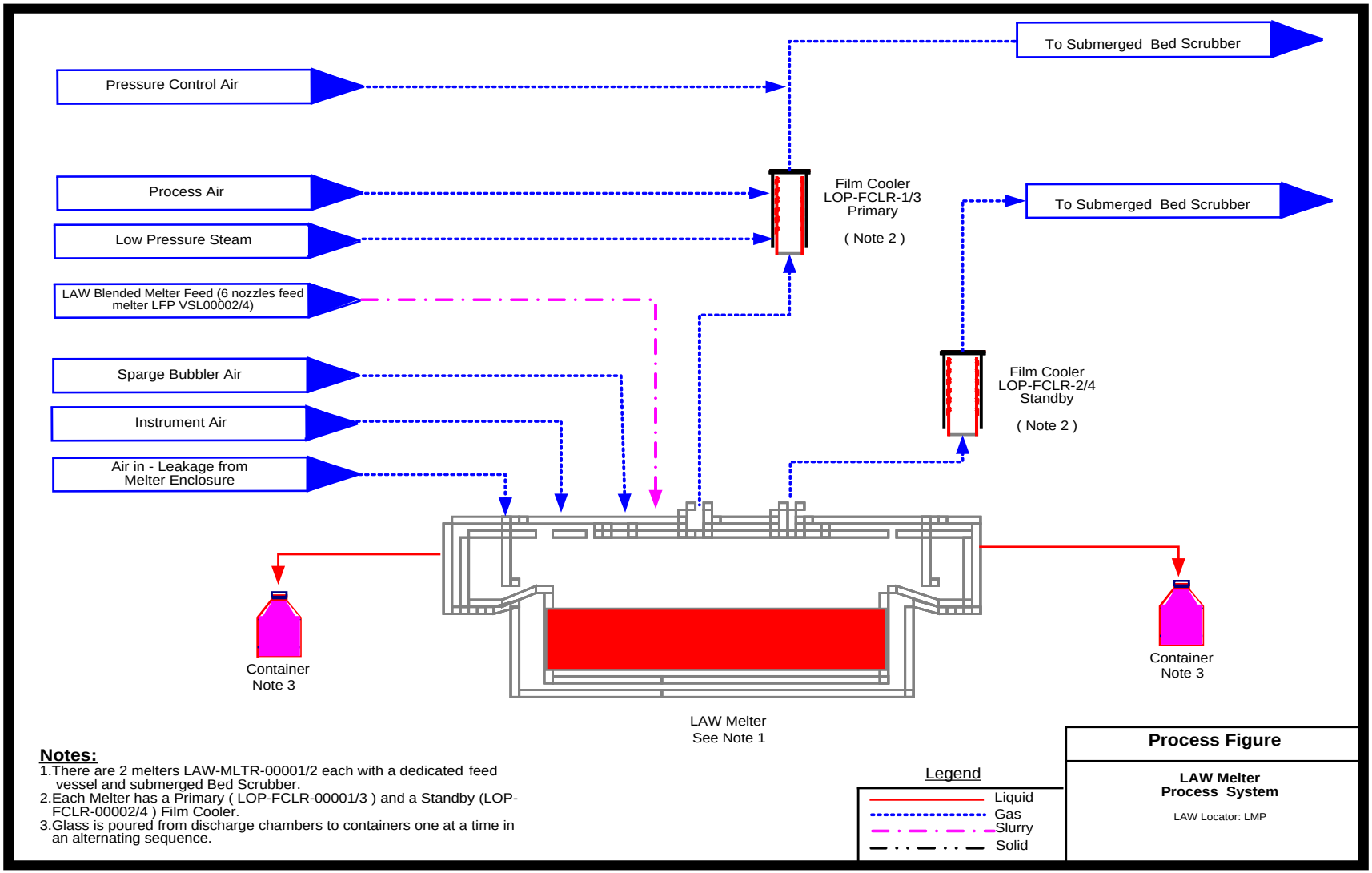


**Figure 4A-21 LAW Melter Process System (LMP)**

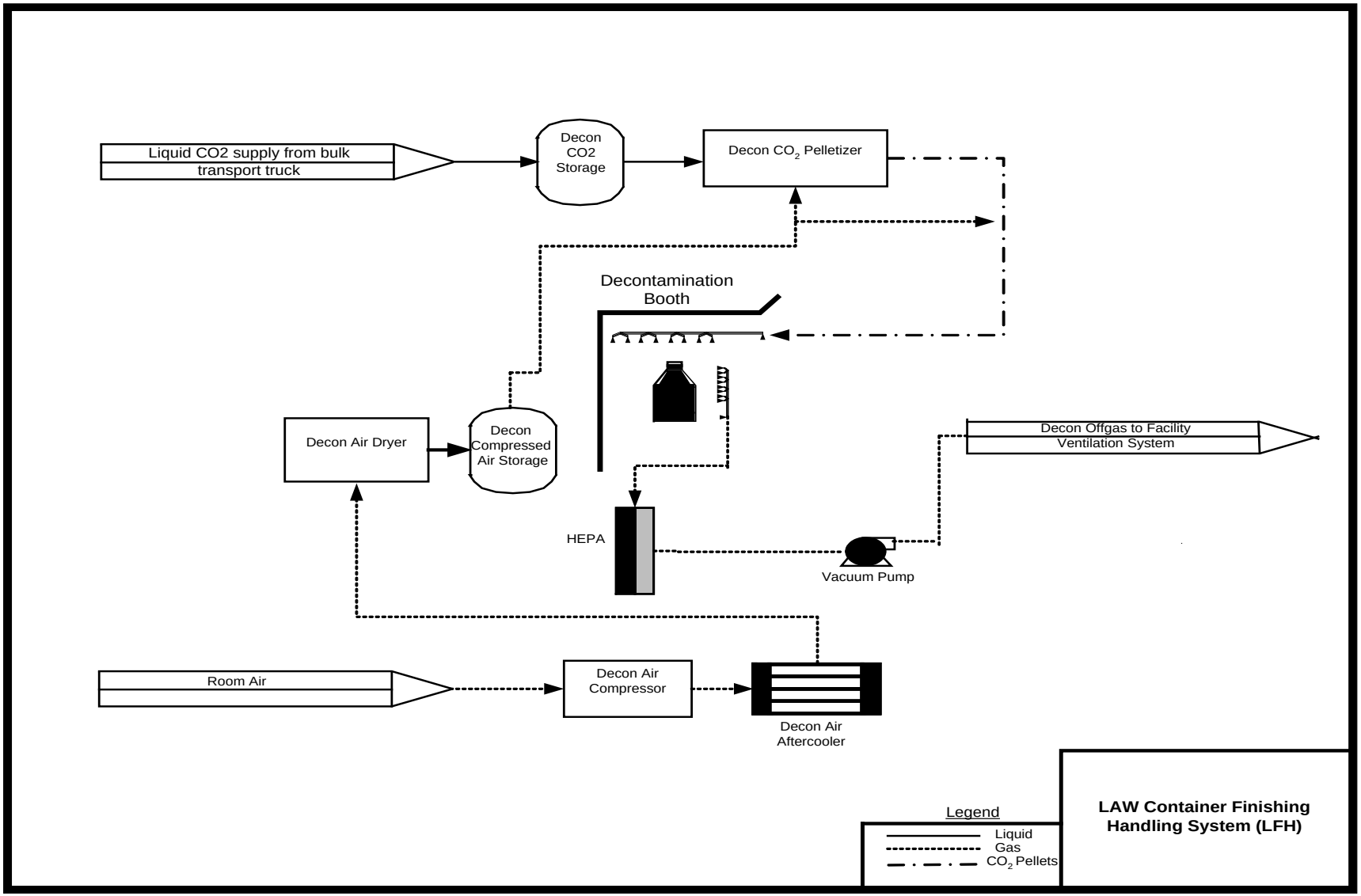


**Figure 4A-24 LAW Container Finishing Handling System (LFH)**

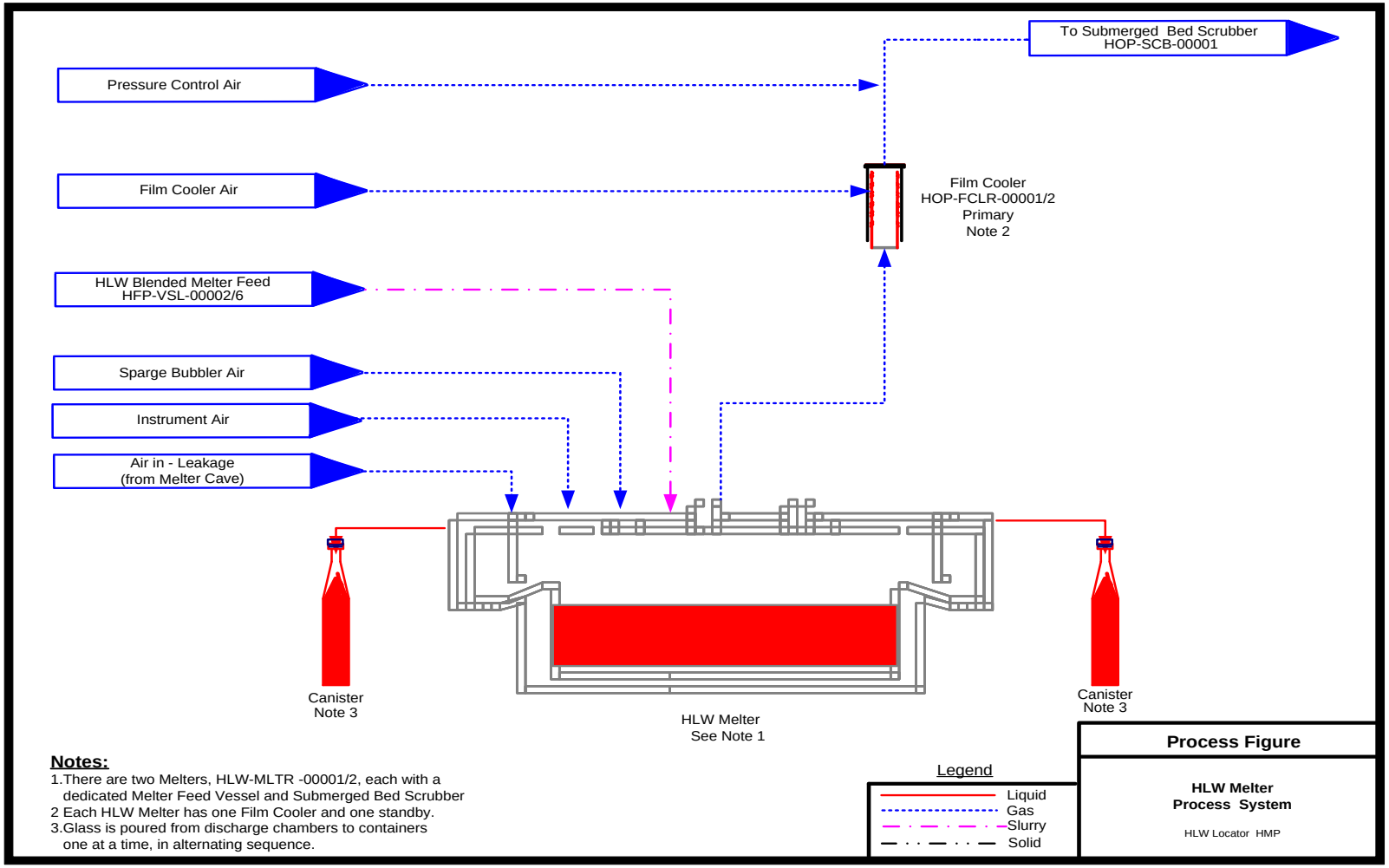


**Figure 4A-27 HLW Melter Process System (HMP)**

This page intentionally left blank.

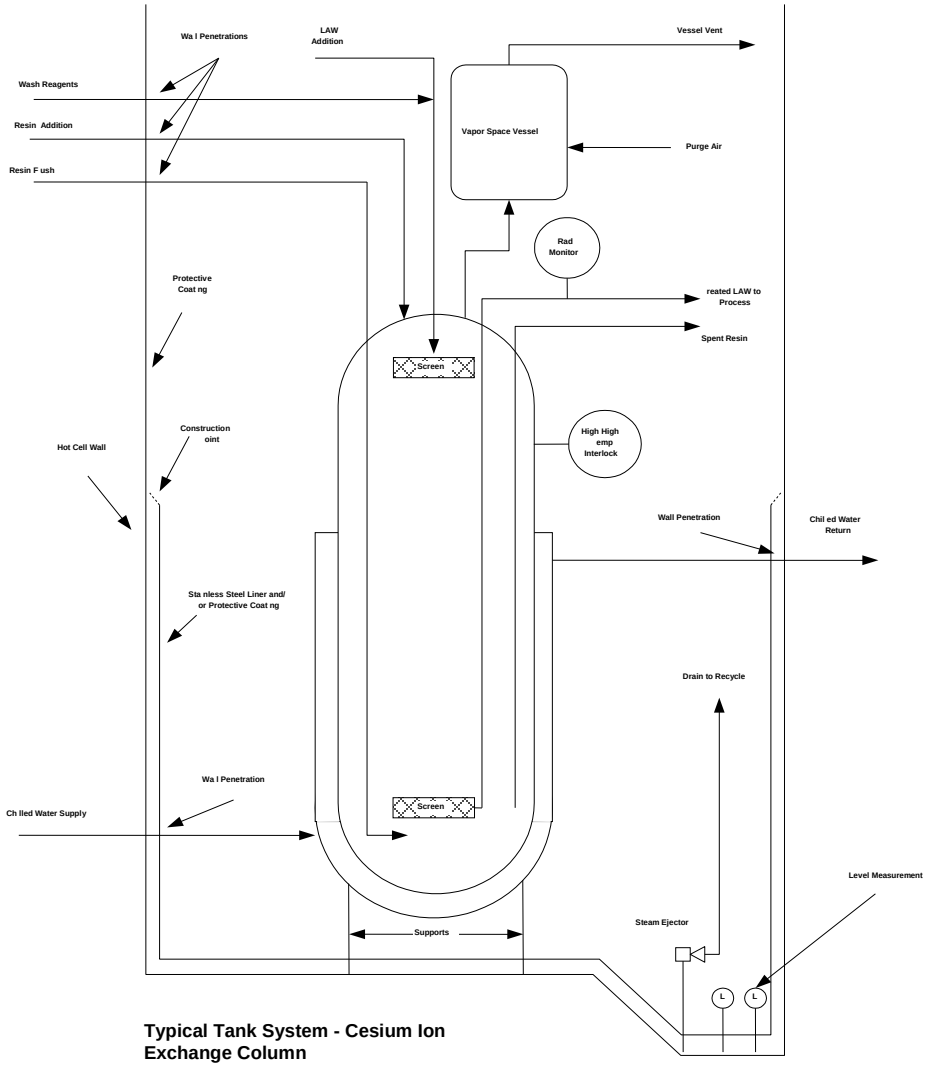


**Figure 4A-38 Typical Tank System – Cesium Ion Exchange Column**

This page intentionally left blank.

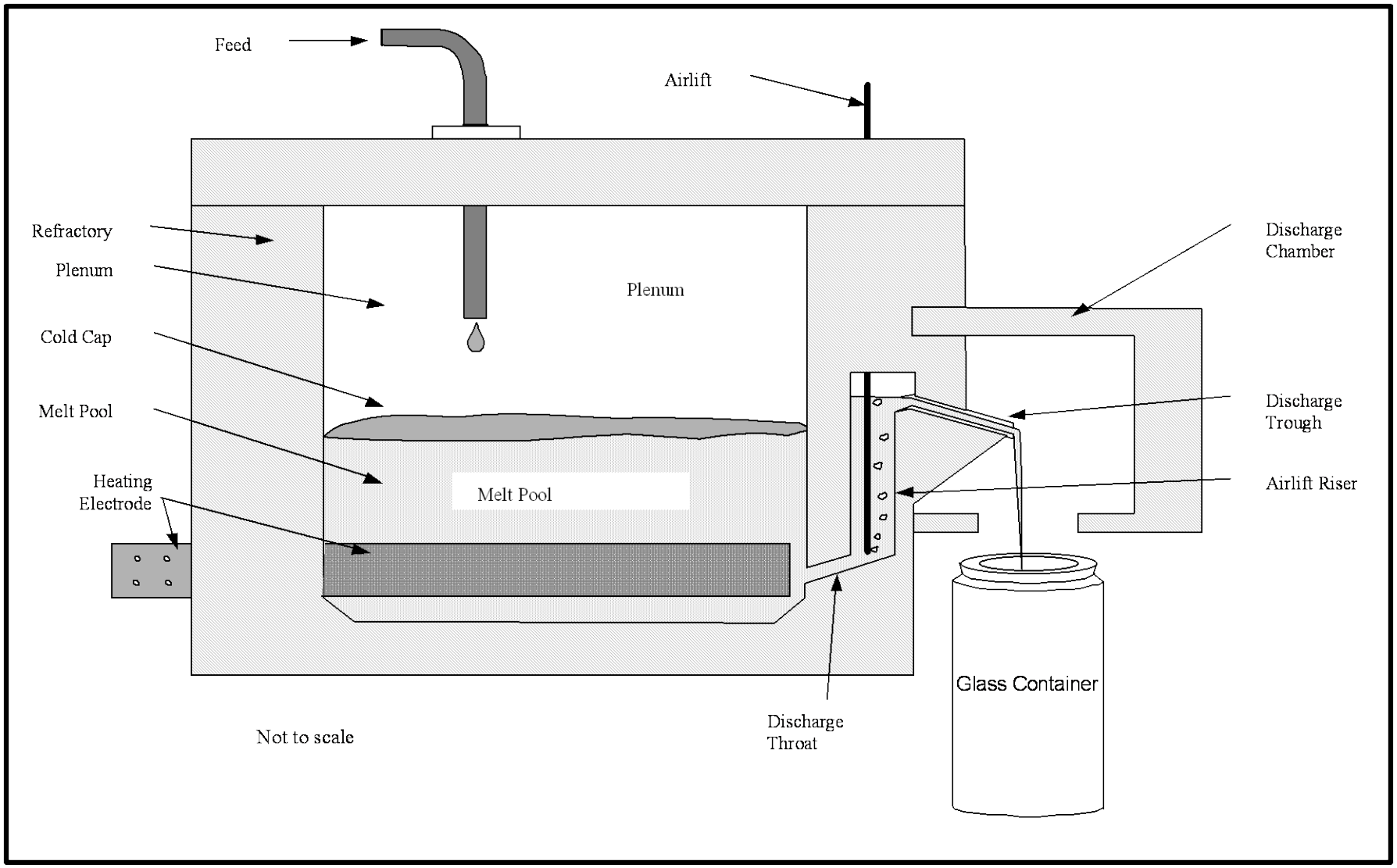


**Figure 4A-48 Typical System - LAW Melter Process System (LMP)**

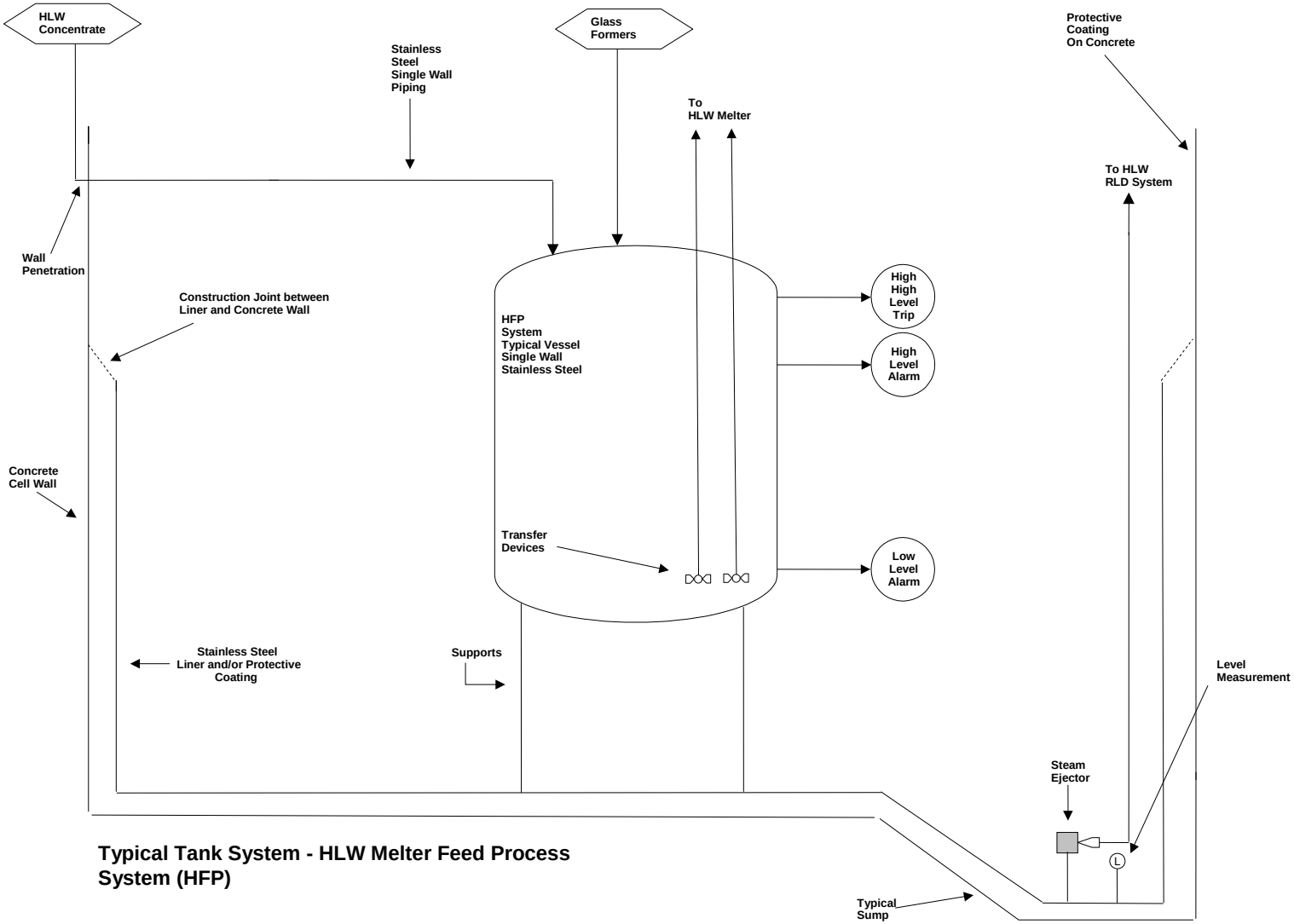


**Figure 4A-53 Typical Tank System – HLW Melter Feed Process System (HFP)**

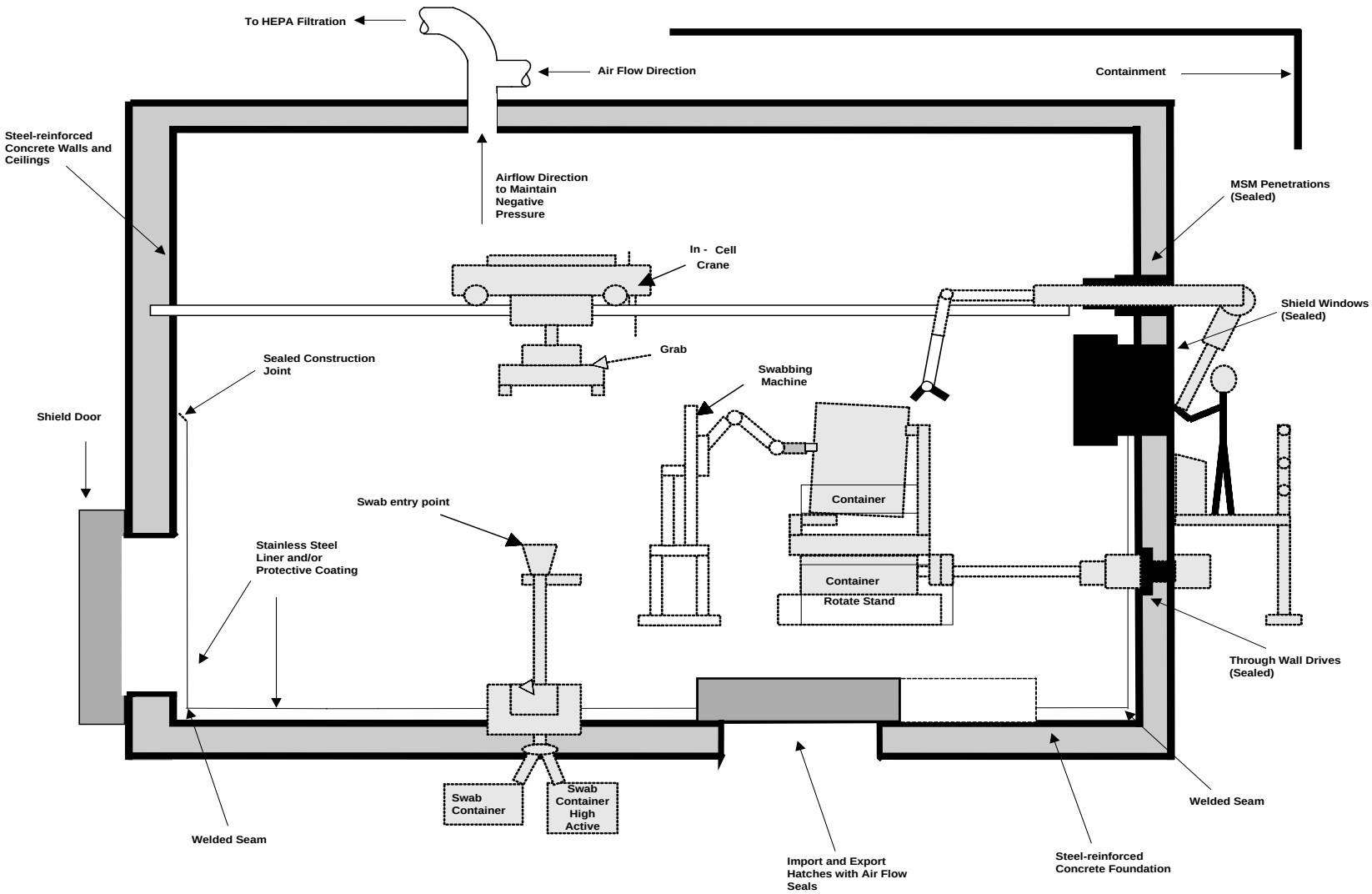


**Typical System - Containment Building**

**Figure 4A-59 Typical System - Containment Building (Sheet 1)**

This page intentionally left blank.

## Figure 4A-59 Typical System - Containment Building Typical Design Features Crosswalk (Sheet 2)

| Containment Building | Negative Cell Air Pressure | Air Flow to HEPA Filters | SS Liner With Welded Seams | Import / Export Hatch - (Controlled Air Gap) | Shield Windows - (Sealed) | Steel Reinforced Concrete Floor/Foundation | Steel Reinforced Concrete Walls & Ceilings | Through Wall MSMs - (Sealed) | In - Cell Bridge Crane / Monorail | Horiz./Vertical Shield Doors - (Controlled Air Gap) | Miscellaneous In-cell Room Equipment |
|---|---|---|---|---|---|---|---|---|---|---|---|
| **Pretreatment Plant** | | | | | | | | | | | |
| Pretreatment Hot Cell Containment Building (P-0123) | X | X | X | X | X | X | X | X | X | X | X |
| | | | | | | | | | | | |
| Pretreatment Maintenance Containment Building | | | | | | | | | | | |
| PM0124 Hot Cell Crane Maintenance Mezzanine | X | | | | X | X | X | | X | | X |
| P-0121A Spent Resin Dewatering | X | X | | X | X | X | X | | | | X |
| P-0122A Waste Packaging Area | X | X | | X | X | X | X | | | | X |
| P-0123A Remote Decontamination Maintenance Cave | X | X | X | X | X | X | X | | X | | X |
| P-0124 C3 Workshop | X | X | | X | X | X | X | | X | | X |
| P-012C1 C3 Workshop | X | X | | X | X | X | X | | X | | X |
| P-0125 Cask Lidding Airlock | X | X | | X | X | X | X | | | X | X |
| P-0125A Cask Lidding Room | X | X | | X | X | X | X | | X | | X |
| P-0128A MSM Repair Area | X | X | | X | X | X | X | | | | X |
| P-0128 Temporary Storage Room | X | | | | X | X | X | | | | X |
| | | | | | | | | | | | |
| Pretreatment Spent Filter Drum Handling Area Containment Building (P-0223) | X | X | | | | X | X | | | X | X |
| | | | | | | | | | | | |
| Pretreatment Filter Cave Room-Containment Building (P-0335) | X | X | X | | | X | X | | | X | X |
| | | | | | | | | | | | |
| Pretreatment PJV Secondary HEPA Filter Room Containment Building (P-0431A) | X | X | | | | X | X | | | | |

| Containment Building | Negative Cell Air Pressure | Air Flow to HEPA Filters | SS Liner With Welded Seams | Import / Export Hatch - (Controlled Air Gap) | Shield Windows - (Sealed) | Steel Reinforced Concrete Floor/Foundation | Steel Reinforced Concrete Walls & Ceilings | Through Wall MSMs - (Sealed) | In - Cell Bridge Crane / Monorail | Horiz./Vertical Shield Doors - (Controlled Air Gap) | Miscellaneous In-cell Room Equipment |
|---|---|---|---|---|---|---|---|---|---|---|---|
| **LAW Vitrification Plant** | | | | | | | | | | | |
| LAW LSM Gallery Containment Building (L-0112) | X | X | | | | X | X | | | X | X |
| | | | | | | | | | | | |
| ILAW Container Finishing Containment Building | | | | | | | | | | | |
| L-0109B Swabbing Cell North Line | X | X | | X | X | X | X | X | X | X | X |
| L-0109C Decontamination Area North Line | X | X | | X | X | X | X | X | X | X | X |
| L-0109D Inert Fill / Welding Area North Line | X | X | | X | X | X | X | X | X | X | X |
| L-0115B Swabbing Cell South Line | X | X | | X | X | X | X | X | X | X | X |
| L-0115C Decontamination Area South Line | X | X | | X | X | X | X | X | X | X | X |
| L-0115D Inert Fill / Welding Area South Line | X | X | | X | X | X | X | X | X | X | X |
| L-0109E Container Monitoring/Export Area - North Line | X | X | | X | X | X | X | X | X | X | X |
| L-0115E Container Monitoring/Export Area - South Line | X | X | | X | X | X | X | X | X | X | X |
| | | | | | | | | | | | |
| LAW Vit Plant C3 Workshop Containment Building (L-226A) | X | X | | | | X | X | | X | | X |
| LAW Consumable Import/Export Containment Building (L-0119B) | X | X | | | | X | X | | X | | X |
| LAW Pour Cave Containment Building | | | | | | | | | | | |
| L-B015A Pour Cave (Melter 1) | X | X | | X | X | X | X | X | X | X | X |
| L-B013C Pour Cave (Melter 1) | X | X | | X | X | X | X | X | X | X | X |
| L-B013B Pour Cave (Melter 2) | X | X | | X | X | X | X | X | X | X | X |
| L-B011C Pour Cave (Melter 2) | X | X | | X | X | X | X | X | X | X | X |
| L-B011B (Spare) | X | X | | X | X | X | X | X | X | X | X |
| L-B009B (Spare) | X | X | | X | X | X | X | X | X | X | X |
| ILAW Container Buffer Storage Containment Building | | | | | | | | | | | |
| L-B025C | | | | | | | | | | | |
| L-B025D | | | | | | | | | | | |

| Containment Building | Negative Cell Air Pressure | Air Flow to HEPA Filters | SS Liner With Welded Seams | Import / Export Hatch - (Controlled Air Gap) | Shield Windows - (Sealed) | Steel Reinforced Concrete Floor/Foundation | Steel Reinforced Concrete Walls & Ceilings | Through Wall MSMs - (Sealed) | In - Cell Bridge Crane / Monorail | Horiz./Vertical Shield Doors - (Controlled Air Gap) | Miscellaneous In-cell Room Equipment |
|---|---|---|---|---|---|---|---|---|---|---|---|
| **HLW Vitrification Plant** | | | | | | | | | | | |
| HLW Melter Cave 1 Containment Building: | X | X | X | X | X | X | X | X | X | X | X |
| H-0117 Melter Cave 1 | X | X | X | X | X | X | X | X | X | X | X |
| H-0116B Melter Cave 1 - C2/C3 Airlock | X | X | | | | X | X | | | X | |
| H-0310A Melter Cave 1 Equipment Decon Pit | X | X | X | X | X | X | X | X | X | X | |
| | | | | | | | | | | | |
| HLW Melter Cave2 Containment Building: | X | X | X | X | X | X | X | X | X | X | X |
| H-0106 Melter Cave 2 | X | X | X | X | X | X | X | X | X | X | X |
| H-0105B Melter Cave 2 - C2/C3/ Airlock | X | X | | | | X | X | | X | X | |
| 1 H-0304A Melter Cave 2 Equipment Decontamination Area | X | X | X | X | X | X | X | X | X | X | |
| | | | | | | | | | | | |
| IHLW Canister Handling Cave Containment Building (H-0136) | X | X | X | X | X | X | X | X | X | X | X |
| | | | | | | | | | | | |
| IHLW Canister Swab and Monitoring Cave Containment Building (H-0133) | X | X | | X | X | X | X | X | X | X | |
| | | | | | | | | | | | |
| C3 Workshop Containment Building: | X | X | | | | X | X | | | | X |
| C3 Workshop (H-0311A) | X | X | | | | X | X | | | | X |
| C3 MSM Maintenance Workshop (H-0311B) | X | X | | | | X | X | | | | |
| | | | | | | | | | | | |
| HLW Filter Cave Containment Building (H-0104) | X | X | | X | X | X | X | X | X | X | X |
| | | | | | | | | | | | |
| HLW Waste Handling Area Containment Building: | X | X | | | | X | X | | | | |
| H-0410B E&I Room | X | X | | | | X | X | | | | |
| H-0411 Waste Handling Room | X | X | | | | X | X | | | | |
| | | | | | | | | | | | |
| HLW Pour Tunnel 1 Containment Building (H-B032) | X | X | X | X | | X | X | | X | | |
| | | | | | | | | | | | |
| HLW Pour Tunnel 2 Containment Building (H-B005A) | X | X | X | X | | X | X | | X | | |
| | | | | | | | | | | | |
| HLW Drum Swabbing and Monitoring Area Containment Building: | X | X | | | | X | X | | X | | |
| H-0126A Crane Maintenance Room | X | X | | | | X | X | | | | |
| H-0126B Swabbing and Monitoring Room | X | X | | | | X | X | | | | |
| H-B028 Cask Import/Export Room | X | X | | | | X | X | | X | | |

This page intentionally left blank.

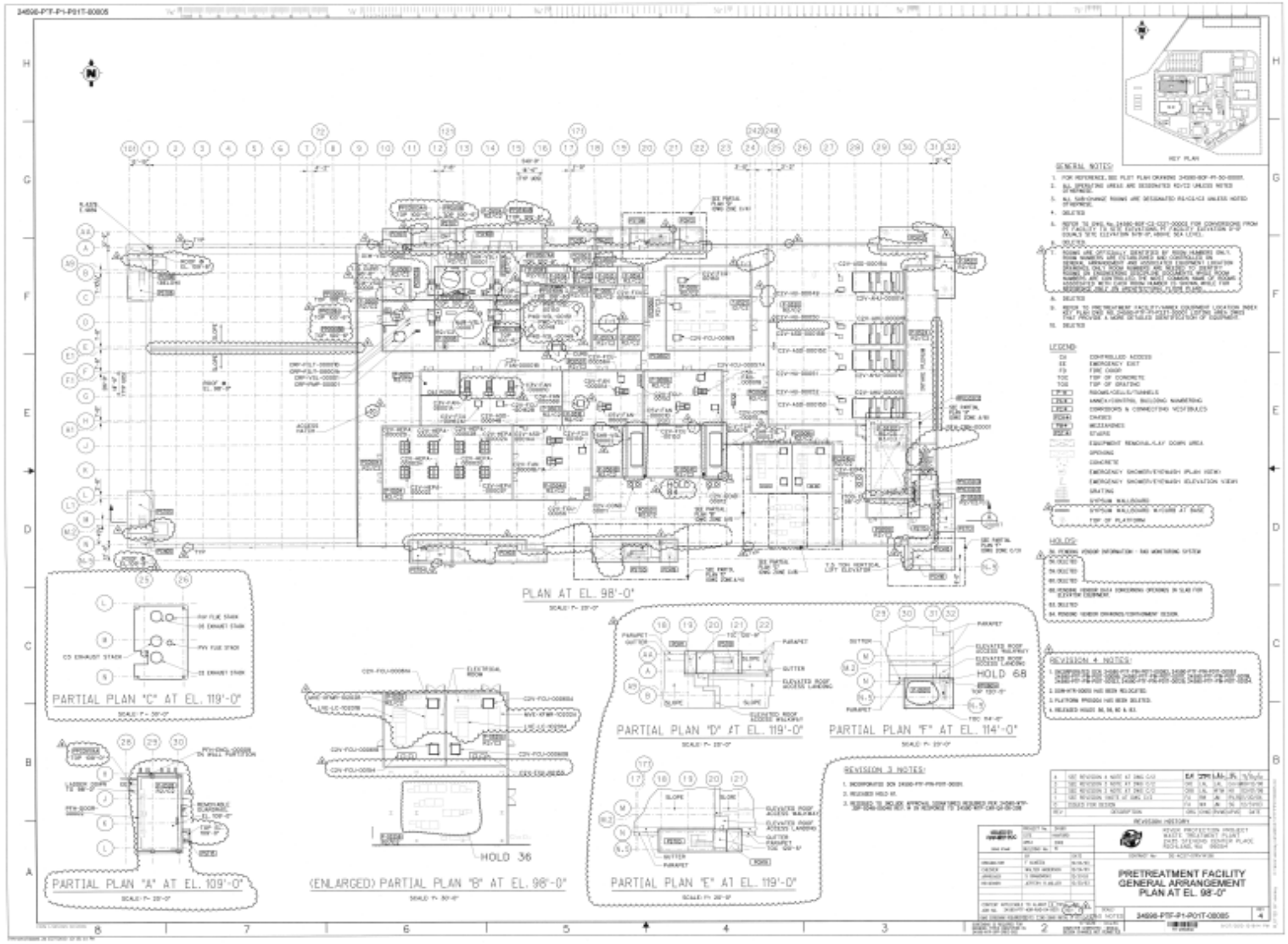


**Figure 4A-65 Simplified General Arrangement Pretreatment - Plan at El. 98**

Some information, on this page, may appear to be illegible; however, the information necessary for assuring adequate design is legible

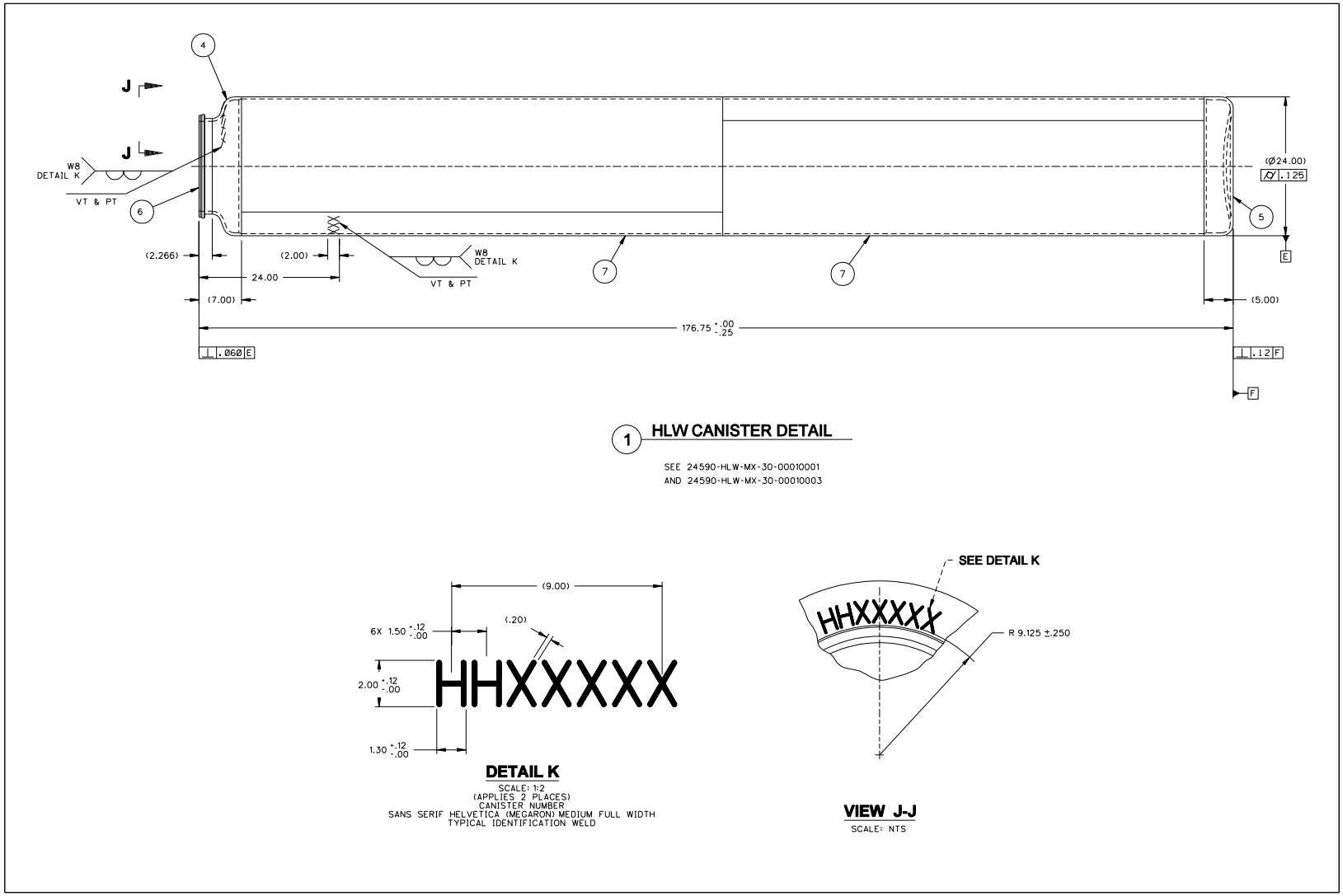


**Figure 4A-118 Schematic of an Example IHLW Container and Label**

Some information, on this page, may appear to be illegible; however, the information necessary for assuring adequate design is legible

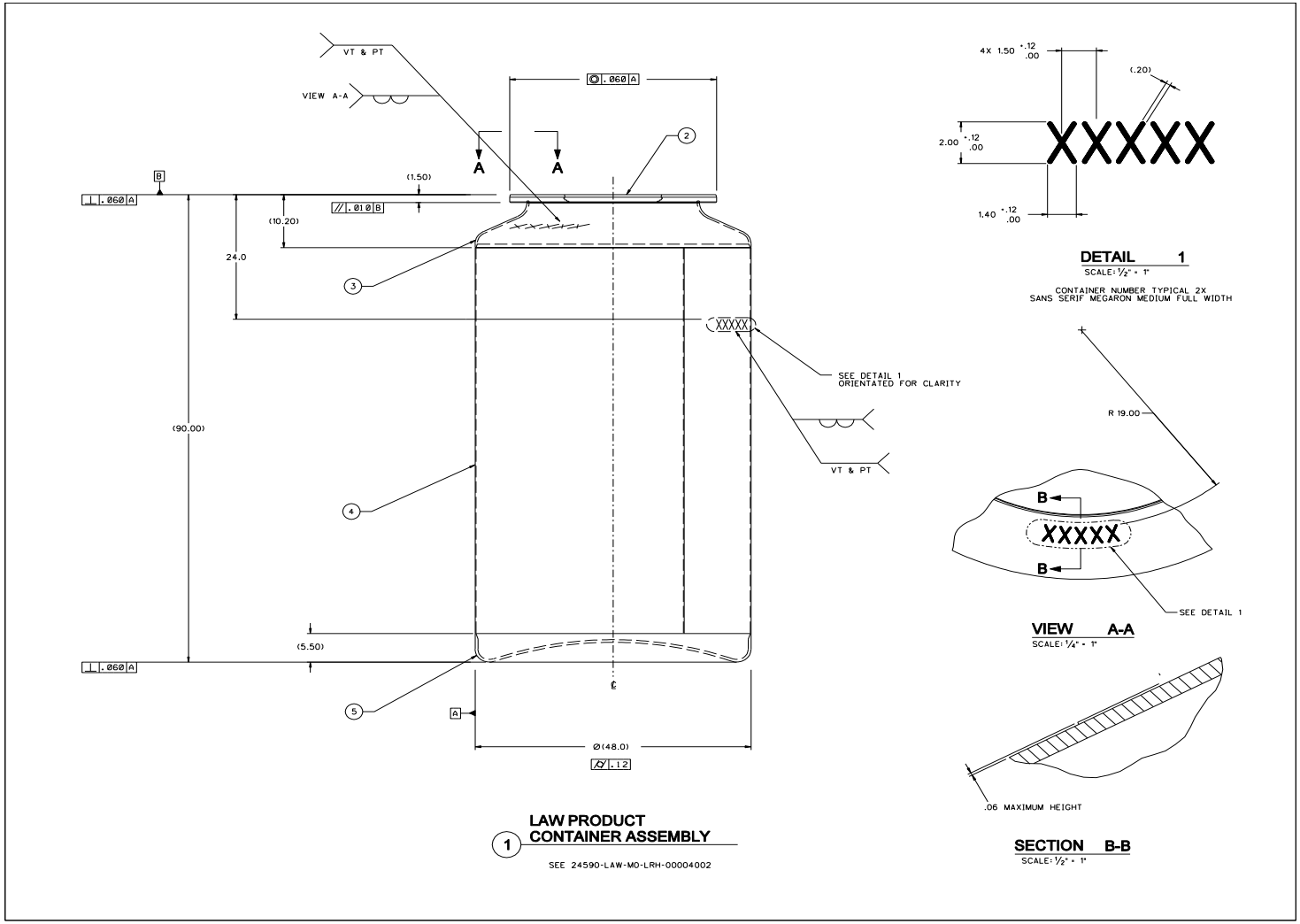


**Figure 4A-119 Schematic of an Example ILAW Container and Label**

Some information, on this page, may appear to be illegible; however, the information necessary for assuring adequate design is legible

This page intentionally left blank.

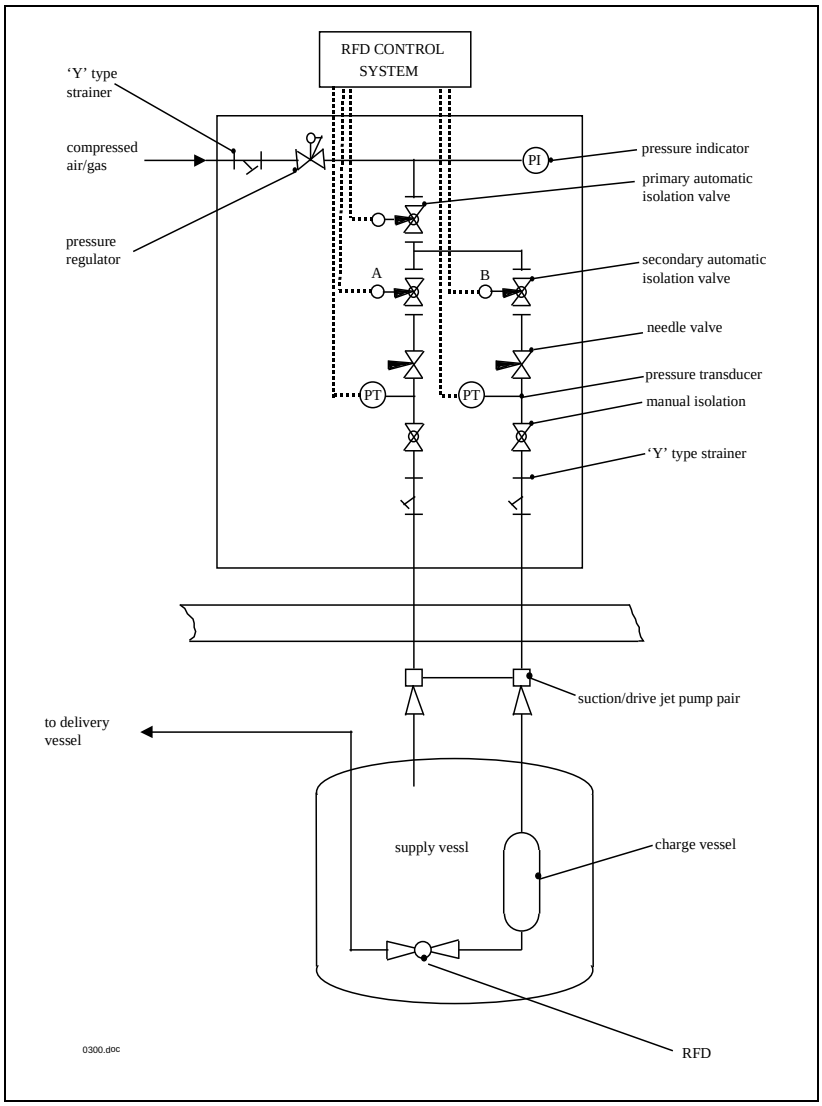


**Figure 4A-120 Typical Arrangement of a Reverse Flow Diverter**

Some information, on this page, may appear to be illegible; however, the information necessary for assuring adequate design is legible

This page intentionally left blank.

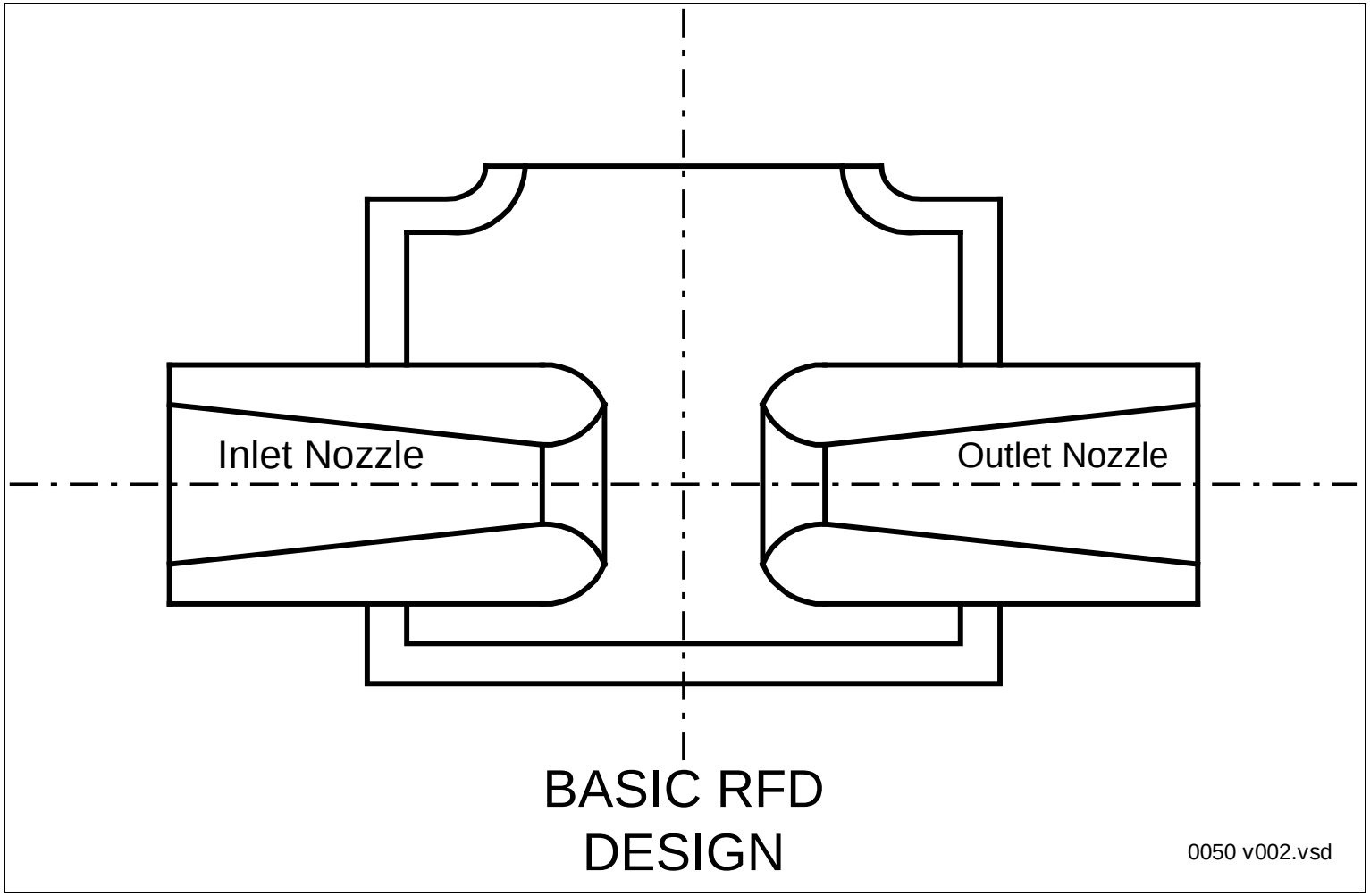


**Figure 4A-121 Basic Reverse Flow Diverter Design**

This page intentionally left blank.

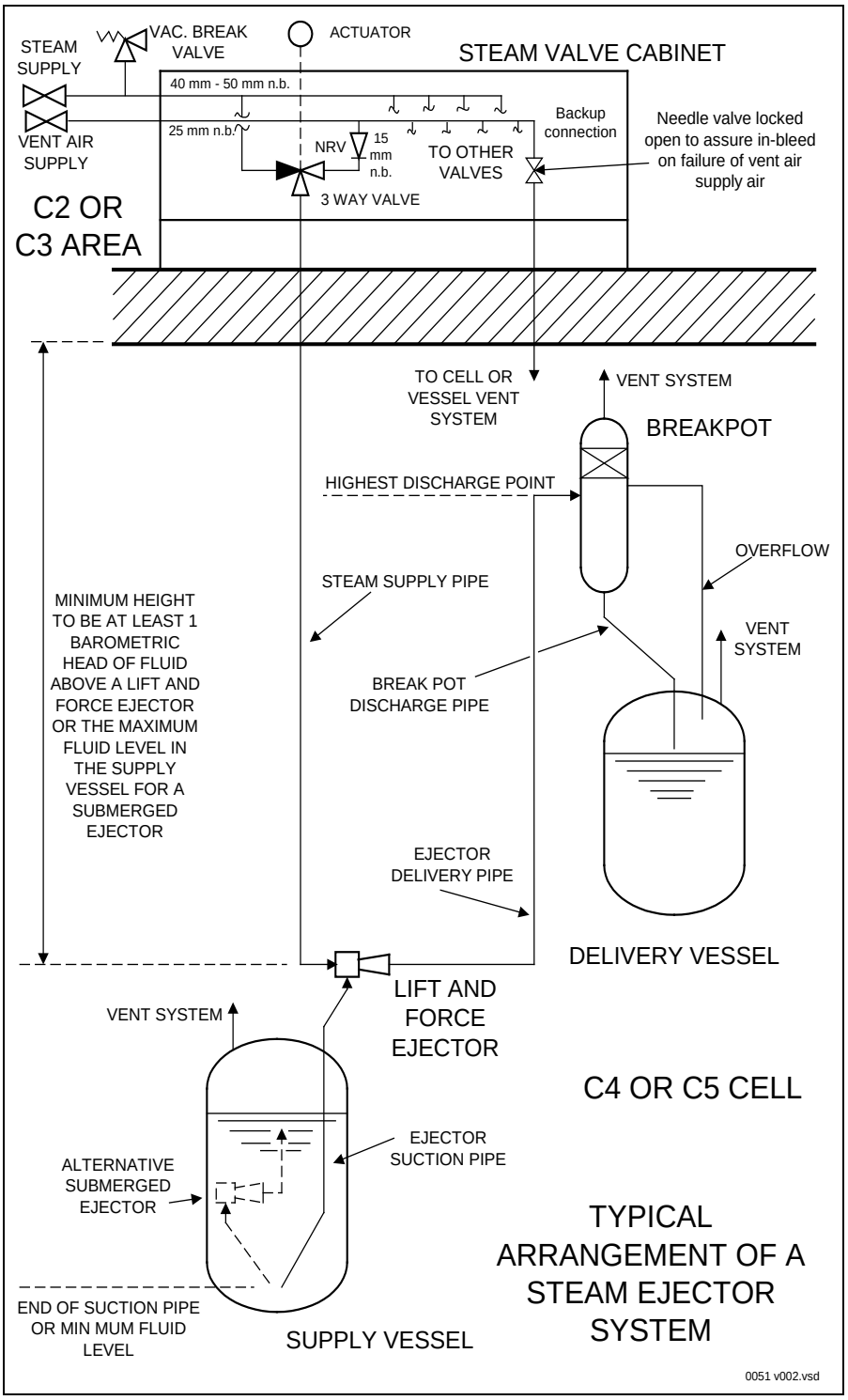


**Figure 4A-122 Typical Arrangement of a Steam Ejector System**

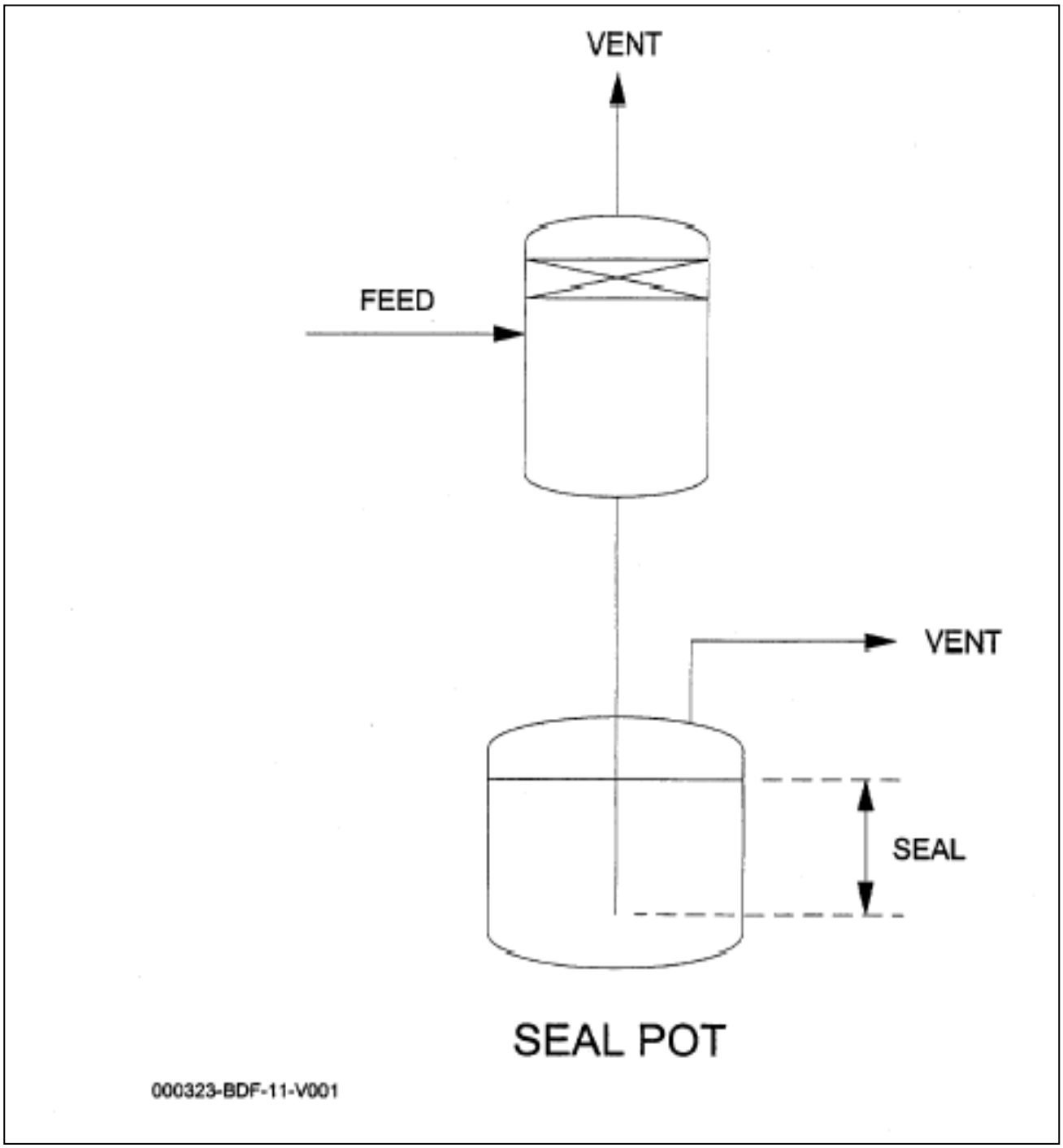


**Figure 4A-123 Typical Seal Pot Arrangement**

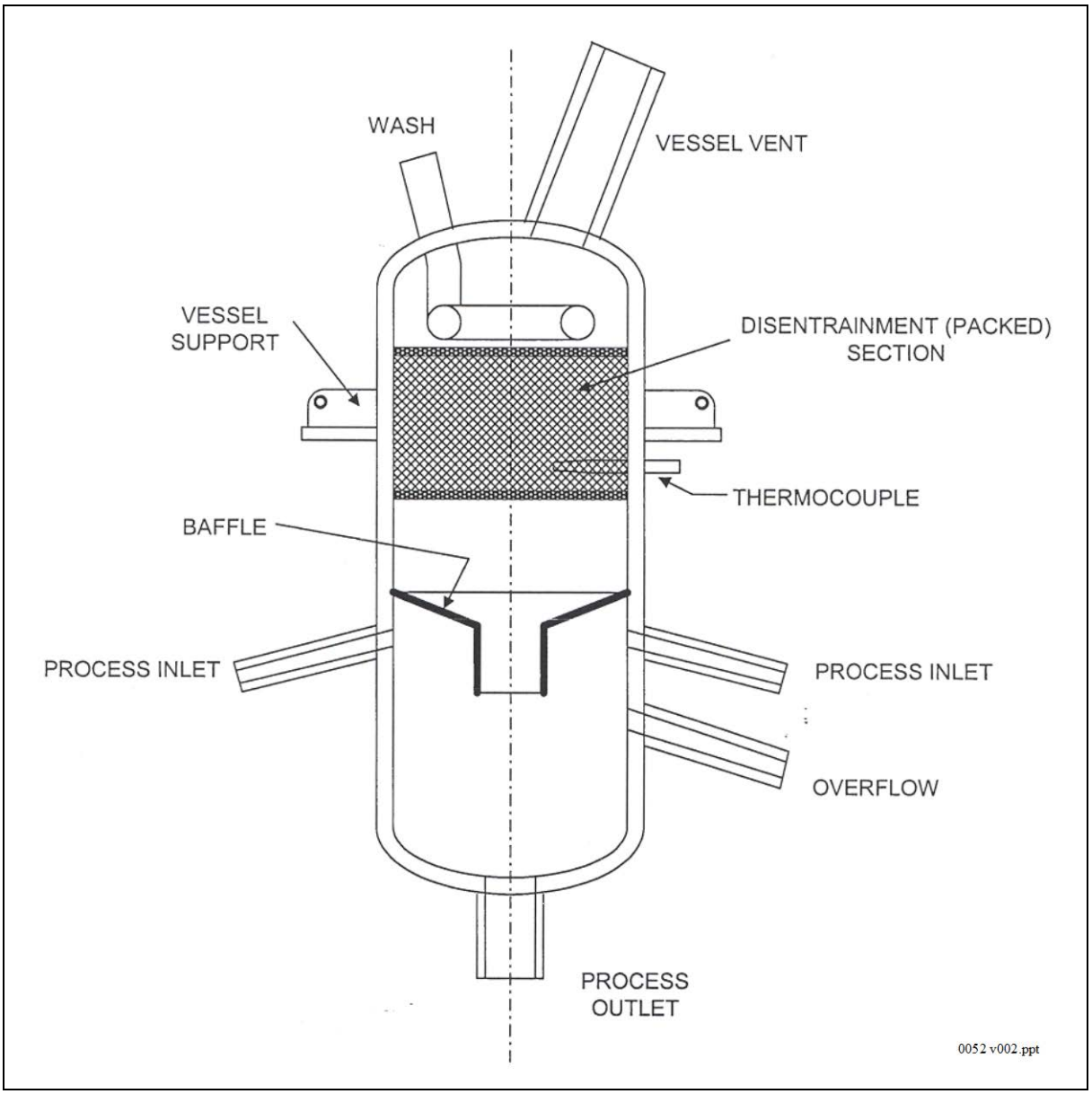


**Figure 4A-124 Typical Breakpot Arrangement**

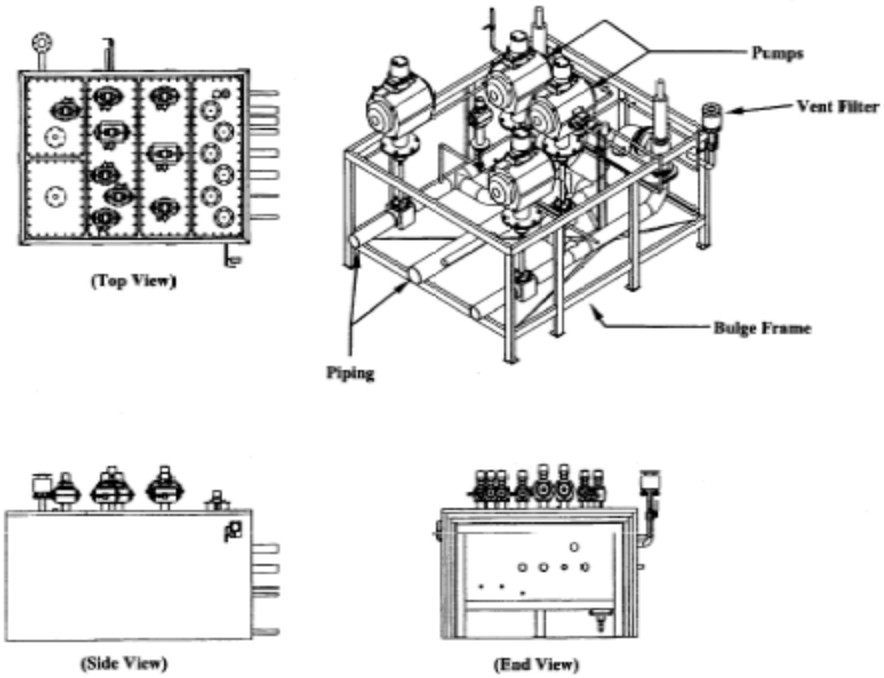


**Figure 4A-127 Typical Bulge Configuration**

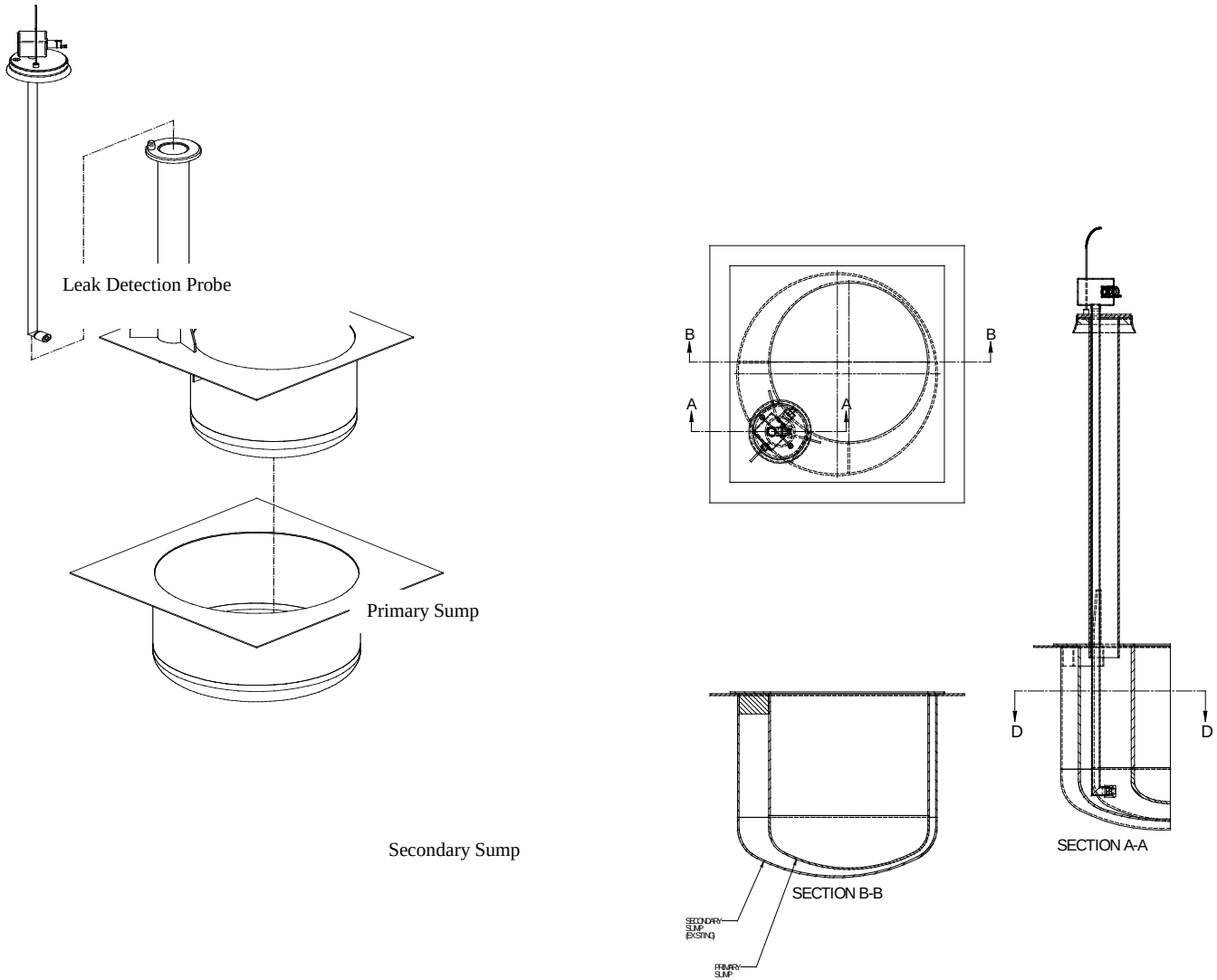


**Figure 4A-128 Typical Primary Containment Sump Conceptual Design**

This page intentionally left blank.

# WASTE TREATMENT AND IMMOBILIZATION PLANT
# CHAPTER 4E
# LOW-ACTIVITY WASTE (LAW) VITRIFICATION FACILITY

## CHANGE CONTROL LOG

Change Control Logs ensure that changes to this unit are performed in a methodical, controlled, coordinated, and transparent manner. Each unit addendum will have its own change control log with a modification history table. The "**Modification Number**" represents Ecology's method for tracking the different versions of the permit. This log will serve as an up to date record of modifications and version history of the unit.

Modification History Table

| Modification Date | Modification Number |
|---|---|
| 09/05/2017 | 8C.2017.6F |
| 12/15/2016 | 8C.2016.Q3 |
| | |

This page intentionally left blank.

# CHAPTER 4E
# LOW-ACTIVITY WASTE (LAW) VITRIFICATION FACILITY

This page intentionally left blank.

# CHAPTER 4E
# LOW-ACTIVITY WASTE (LAW) VITRIFICATION FACILITY

## TABLE OF CONTENTS

4E Low-Activity Waste (LAW) Vitrification Facility ..... 5
4E.1 Containers ..... 6
4E.1.1 Description of Containers ..... 6
4E.1.2 Container Management Practices ..... 7
4E.2 Tank Systems ..... 9
4E.2.1 LAW Melter Feed Process ..... 9
4E.2.2 LAW Melter Process (LMP) System ..... 11
4E.2.3 Radioactive and Nonradioactive Liquid Waste Disposal (RLD and NLD) Systems ..... 14
4E.2.4 LAW Radioactive Solid Waste Handling (RWH) System ..... 16
4E.2.5 ILAW Glass Container Handling ..... 17
4E.2.6 LAW Melter Equipment Support Handling (LSH) System ..... 22
4E.2.7 LAW Melter Handling (LMH) System ..... 22
4E.3 Containment Buildings ..... 23
4E.3.1 LAW LSM Gallery Containment Building (L-0112) ..... 23
4E.3.2 ILAW Container Finishing Line Containment Building (L-0109B, L-0109C, L-0109D, L-0109E, L-0115B, L-0115C, L-0115D, L-0115E) ..... 25
4E.3.3 LAW Consumable Import/Export Containment Building (L-0119B) ..... 27
4E.3.4 LAW C3 Workshop Containment Building (L-0226A) ..... 29
4E.3.5 LAW Pour Cave Containment Building (L-B009B, L-B011B, L-B011C, L-B013B, L-B013C, L-B015A) ..... 31
4E.3.6 LAW Container Buffer Storage Containment Building (L-B025C, L-B025D) ..... 33
4E.4 Air Emission Control ..... 35
4E.4.1 LAW Vitrification Facility Ventilation ..... 35
4E.4.2 LAW Melter Offgas System ..... 36

## TABLES

Table 4E-1 LAW Vitrification Facility Tank Systems ..... 45
Table 4E-2 LAW Vitrification Facility Miscellaneous Units (Systems and Sub-Systems) ..... 47
Table 4E-3 LAW Vitrification Facility Secondary Containment Rooms/Areas ..... 50
Table 4E-4 LAW Vitrification Facility Sumps, Leak Detection Boxes, and Floor Drains/Lines ..... 51
Table 4E-5 LAW Vitrification Facility Containment Buildings Summary ..... 54

# 4E Low-Activity Waste (LAW) Vitrification Facility

This chapter describes the Waste Treatment Plant (WTP) Low-Activity Waste (LAW) vitrification facility, including processes and systems associated with management of tank systems, miscellaneous units, and containment buildings. The LAW vitrification facility has major processes, systems, permitted tanks, miscellaneous units (MUs), containment building units, and support systems. Figure 4A-3 located in Chapter 4A presents a simplified process flow diagram of the LAW vitrification processes. The LAW vitrification facility processes and systems perform the following functions:

- Receive and store pretreated LAW feed.
- Convert blended LAW feed and glass formers into glass.
- Treat melter offgas.
- Handle Immobilized Low Activity Waste (ILAW) containers.
- Store ILAW containers.
- Provide supporting equipment in the melter gallery.
- Handle miscellaneous secondary waste.
- Ventilate the LAW vitrification facility.

The following figures located in Chapter 4A and drawings found in Dangerous Waste Permit (DWP) Operating Unit Group 10, Appendix 9, provide additional detail for the LAW vitrification facility:

- Simplified flow diagrams for the WTP and the LAW vitrification facility.
- Process flow figures and drawings for process information.
- Typical system figures depicting common features for each regulated system.
- General arrangement figures and drawings showing locations of regulated equipment.
- Waste management area figures and drawings showing facility locations to be permitted.

Instrumentation, alarms, controls, and interlocks will be provided for the tank systems and miscellaneous treatment unit sub-systems to indicate or prevent the following conditions, as appropriate:

- Overfilling: Plant items are protected against overfilling by liquid level indication, high level instrumentation interlocks to shut off feed sources, and process control system control functions backed up by hard wired trips as required.
- Loss of containment: Plant items are protected against containment loss by liquid level indication, process control system control and alarm functions as required, including shut off of feed sources. Tanks and MUs that manage liquid mixed and/or dangerous waste are provided with secondary containment. Ancillary equipment and miscellaneous unit ancillary equipment are provided with secondary containment or are visually inspected for leaks on a daily basis in accordance with Washington Administrative Code (WAC) 173-303-640(4)(f). Some LAW vitrification facility tanks and/or MUs utilize daily visual inspections for leak detection. Sumps associated with the management of mixed and/or dangerous waste are provided with liquid level instrumentation and an ejector or pump to empty the sump as needed.
- Inadvertent transfers of fluids: System sequential operations are properly interlocked to prevent inadvertent transfers at the wrong time or to the wrong location.
- Loss of mixing function: Tank systems are instrumented (air pressure/flow indication) to prevent hydrogen accumulation and solids settling. Tanks with agitators are instrumented to prevent agitator and/or vessel damage at low liquid level.
- Unsafe or off-normal melter operating conditions.
- Degraded emissions control equipment and/or operating conditions.

- Loss of air flow: The ventilation systems are designed to create a pressure gradient which causes air to flow through engineered routes from an area of lower contamination potential to an area of higher contamination potential.
- Loss of site power.

In addition to level control, temperature and pressure may be monitored for tank systems and miscellaneous treatment unit systems in some cases. Additional information may be found in the system logic descriptions located in DWP Operating Unit Group 10, Appendix 9.13. Regulated process and leak detection system instruments and parameters will be provided in DWP Table III.10.E.F for tank systems and in DWP Table III.10.H.C for miscellaneous treatment unit sub-systems.

Descriptions of the LAW vitrification process, melter offgas treatment systems, and ILAW glass container handling systems are provided in Sections 4E.2 through 4E.4. Table 4E-1 lists current tank design information (capacity, materials of construction, and dimensions). Table 4E-2 lists the current miscellaneous unit design information. The tanks and miscellaneous units are grouped by process systems in these tables.

Tanks or miscellaneous units that manage liquid mixed or dangerous waste are provided with secondary containments. Table 4E-3 summarizes the secondary containment rooms/areas and calculated minimum liner heights. Sumps, leak detection boxes, and secondary containment drain systems are listed in Table 4E-4.

## 4E.1 Containers

The LAW vitrification facility does not have permitted container storage areas. The dangerous and mixed waste generated at the LAW vitrification facility is managed in containment buildings, as described in Section 4E.3. In addition, containerized secondary waste is managed in 90-day accumulation areas and satellite accumulation areas pursuant to the requirements in WAC 173-303-200, generating dangerous waste on-site. All waste anticipated to be dangerous or mixed waste is managed in accordance with WAC 173-303-170, requirements for generators of dangerous waste, through WAC 173-303-230, special conditions. The dangerous and mixed waste is labeled and characterized in accordance with requirements in WAC 173-303-070, designation of dangerous waste. Information on all 90-day accumulation areas and satellite accumulation areas is maintained as required in the Hanford Dangerous Waste Permit, Part II General Facility Conditions, permit condition III.I.1.a.

### 4E.1.1 Description of Containers

The following types of waste will be managed in containers:

- ILAW (immobilized glass)
- Miscellaneous mixed waste (secondary waste)
- Miscellaneous nonradioactive dangerous waste (secondary waste)

The waste form dictates the type of containers used for waste management. The following are examples of the generated secondary waste

- Spent or failed equipment
- Offgas High Efficiency Particulate Air (HEPA) filters
- Spent maintenance materials
- Melter consumables
- Personal Protective Equipment

### 4E.1.2 Container Management Practices

The following paragraphs describe how each of the containers used at the LAW vitrification facility are managed.

#### 4E.1.2.1 ILAW Containers

Immobilized glass waste ILAW containers will be moved remotely due to the high radiation content of the waste. A brief discussion of how the containers move through the WTP is presented below

An empty container will be transported to a LAW glass pour cave and placed on a turntable designed to hold three containers. There are two LAW pour caves at each melter, each with the capacity to manage three containers at a time. The container will be sealed to the melter discharge with a pour head connection. The glass waste will fill the container during the course of approximately 10 hours.

The filled ILAW container will be lowered back onto the turntable. The filled container will cool for 10 to 30 hours to reach glass transition temperature (approximately 400°C to 500°C), which characterizes the transformation from an equilibrated melt to a "frozen" glass structure. At this stage, the waste glass does not contain liquid and is in a viscous state that ultimately stabilizes to a solid. Once the container has cooled, it will be rotated to the transfer position. The container will then be lifted by a remotely operated monorail hoist, moved to the transfer tunnel, lowered onto a container transfer bogie, and transported to a position within the transfer tunnel below the finishing line. In the event the finishing line becomes backed up, the container may be transported to the LAW container buffer storage containment building. The containers will not be stacked.

The container will be transported to the LAW container finishing line (see Section 4E.3), where the level of waste glass will be measured and additional inert filler will be added, if needed.

A sample of the glass may also be collected in this location prior to inert filling. Glass within the neck of the container will be removed by abrasion and the lid will be attached to the container. The debris generated from residual glass removal will be collected with a vacuum system and disposed of as a secondary waste.

After the lid is mechanically sealed, the container will be moved to the decontamination cell where contamination will be removed. Using a turntable, the container will revolve while a power manipulator tracks the entire surface with decontamination equipment. The dry decontamination process will use carbon dioxide pellets. The container will then be transported to the swabbing cell, where its surface will be swabbed. The radiation levels of the swab will be remotely monitored, and the results will determine whether the ILAW container will be ready for transportation to the disposal site, or go through decontamination again.

<u>Other ILAW Container Storage Requirements</u>

As stated in WAC 173-303-630(5)(c), a 30 in. separation is required between aisles of containers holding dangerous waste in permitted container storage areas. In addition, WAC 173-303-340(3) requires a 30 in. separation to allow unobstructed movement of personnel, fire protection equipment, spill control equipment, and decontamination equipment in an emergency.

Evaluation of the 30-in. aisle spacing requirement by the United States Department of Energy (DOE), WTP, the United States Environmental Protection Agency (EPA), and the Washington State Department of Ecology (Ecology) for ILAW containers concluded that aisle spacing in the range of 4 to 16 in. was adequate based on the following factors:

- Personnel access into the immobilized glass canister storage cave will be restricted. High radiation dose rates from immobilized glass waste canisters will preclude personnel entry into the process and storage areas, and inspection of the ILAW containers will be performed remotely. (See Operating Unit Group 10, Chapter 6.0 for the inspection approach.)

- Water-based fire suppression systems will not be used in the ILAW container buffer storage containment building. Because of its inert nature, the glass waste will present a low fire hazard, and a minimal amount of combustible material will be present. The only potentially combustible material that may be present in the immobilized glass waste canister storage cave is insulation on crane motors and associated cables. To ensure no water is introduced into the canister storage cave, a dry chemical fire suppressant system may be installed.
- Spill control equipment will not be necessary within the ILAW container buffer storage containment building. Spills or leaks from the stored canisters will not occur because the glass waste will be in a solid form and will not contain free liquid. The glass transition temperature characterizes the transformation from an equilibrated melt to a "frozen" glass structure.

The ILAW containers will be stored in a storage rack to allow airflow. No stacking of the ILAW containers will occur. Closed circuit television cameras will enable general viewing of both areas.

#### 4E.1.2.2 Waste Tracking

The plant information network interfaces with the integrated control network and is designed to collect and maintain plant information. The plant information network is currently planned to the following systems (all systems used at the plants/facilities and balance of facilities are provided for information only):

- Plant data warehouse and reporting system
- Laboratory information management system
- Waste tracking and inventory system

Inventory and Batch Tracking

The waste tracking and inventory system will interface with the information system data historian to provide reporting information such as tank volumes, waste characteristics, and facility inventories of process waste. The waste tracking system will also be used to query operations parameters at any time information is needed, as specified by operations, to manage the process system. ILAW containers will be tracked within the facility using an operations developed system: for example, manually recording on a board, manually inputting into the information network, or if available, automated through the integrated control network.

Secondary Waste Stream Tracking

Containerized secondary waste streams and equipment will be tracked and managed through commercially available database management software. Containers will be mapped in each plant and updated during the inspection process using a commercially available drawing software application.

Laboratory Information Management System

The laboratory information management system (LIMS) will be an integral feature of the plant information network. The LIMS will serve as an essential tool for providing data management of regulatory and processing samples. The chosen LIMS will be a commercial off-the-shelf software package designed for performing laboratory information management tasks as described in American Standard Test Method (ASTM) E1578-93, *Standard Guide for Laboratory Information Management Systems (LIMS)*.

The LIMS will track the flow of samples through the laboratory. Samples received in the laboratory will be identified with a unique identification label. The identification label provides details of the sample process stream. Baseline analyses are defined by the requesting plant. Additional analyses, as required, will be input into LIMS by laboratory analysts. Data will be input into LIMS manually or by data transfer

using LIMS/instrument interface. Analyses will be performed using approved and validated analytical procedures.

Analytical results will be compiled by the LIMS and held pending checking and approval by appropriate staff. Approved results will be reported to the requesting plant.

## 4E.2 Tank Systems

### 4E.2.1 LAW Melter Feed Process

The LAW melter feed consists of the following systems:

- LAW concentrate receipt process system (LCP)
- LAW melter feed process system (LFP)
- Glass former reagent system (GFR) (the GFR system does not manage dangerous waste and is provided for informational purposes only)

Process flow diagram of the LAW Concentrate Receipt Process (LCP) System and the LAW Melter Feed Process (LFP) System are provided in DWP Operating Unit Group 10, Appendix 9.1. The LCP and LFP systems prepare feed for the LAW melters to produce a vitrified ILAW product. An analysis of the waste is conducted to determine the appropriate glass additive formulation for the conversion of the waste to glass. The glass additives specified in the formulation are weighed and mixed with the waste. There are two melter feed trains to supply the two LAW melters. Each melter feed train consists of a melter concentrate receipt vessel, a melter feed preparation vessel, and a melter feed vessel.

The LCP system includes the melter concentrate receipt vessels. The LFP system includes the melter feed preparation vessel and the melter feed vessel for each of the two melters.

The LCP tank system consists of the following tanks and their associated ancillary equipment:

- Melter Concentrate Receipt Vessels (LCP-VSL-00001/2)

The LFP tank system consists of the following tanks and their associated ancillary equipment:

- Melter Feed Preparation Vessels (LFP-VSL-00001/3)
- Melter Feed Vessels (LFP-VSL-00002/4)

<u>Melter Concentrate Receipt Vessels (LCP-VSL-00001/2)</u>

DWP Operating Unit Group 10, Appendix 9.1 contains a process flow diagram of the Melter Concentrate Receipt Vessels (LCP-VSL-00001/2). The melter concentrate receipt vessels in LCP system receive LAW feed concentrate from the Pretreatment facility, Low Activity Waste Pretreatment System (LAWPS), and Effluent Management Facility (EMF). One of these vessels is located in each of the two functional process cells. There is also one melter feed preparation vessel and one melter feed vessel in each of the two functional process cells. These vessels are described below. Each concentrate receipt vessel is equipped with the following:

- Mechanical agitator
- Pump with installed spare to transfer concentrate feed
- Instrumentation for liquid level, temperature, pressure, and density measurements
- Internal rotary spray nozzles for periodic washdown
- Overflow to C3/C5 drain/sump collection vessel
- Vent to the LAW secondary offgas system (LVP) via the vessel vent header
- Plant service air purge to control flammable gas accumulation, with instrumentation and alarm to monitor for low purge airflows
- Backup air supply connection.

Valves are located in valve bulges LCP-BULGE-00001/2/3. Valve alignment receives LAW concentrate from the Pretreatment Facility (PTF) in the baseline configuration, and from LAWPS, and EMF in the Direct Feed LAW (DFLAW) configuration, and directs it to the LAW Concentrate Receipt Vessels (LCP-VSL-00001/2). Valve alignment in bulges LCP-BULGE-00001/3 allows the LAW concentrate to be routed to the Melter Feed Preparation Vessels (LFP-VSL-00001/3), or to the Plant Wash Vessel (RLD-VSL-00003) if the Melter Concentrate Receipt Vessels (LCP-VSL-00001/2) are being cleaned out or if the contents of the vessels cannot be satisfactorily processed. In addition, LAW concentrate can be transferred between the two Melter Concentrate Receipt Vessels (LCP-VSL-00001/2), or directs it to the Autosampling System (ASX) system for sampling (ASX-SMPLR-00012/13).

Transfer of out-of-specification LAW concentrate from the LAWPS to LAW is prevented by batch sampling and prior acceptance by WTP before a batch transfer begins, in addition, feed transfers have radiation monitoring and interlock.

### Glass Former Reagent (GFR) System

The GFR system contains the glass former feed mixers that receive blended glass formers and sucrose by dense-phase pneumatic conveyors from the glass former system.

The feed mixers are equipped with filters to remove the dust from air used for pneumatic conveying and blending. A series of single filter cartridges will be mounted on the top of the mixers. The filters are cleaned by introducing compressed air through the cleaning nozzle to blow accumulated dust back into the hoppers.

The feed mixers are equipped with load cells to weigh the glass formers to confirm that the material in the upstream blending silo is conveyed to the feed hoppers and to confirm that the glass formers are transferred out of the feed hoppers to the Melter Feed Preparation Vessels.

The glass formers are gravity-fed with a rotary feeder into the Melter Feed Preparation Vessels, where the glass formers are mixed with the waste feed. This equipment is located in an isolated area that serves as a contamination barrier between the melter feed preparation vessels and the glass former supply. The rotary valve controls the rate of glass former addition into the melter feed preparation vessels.

### Melter Feed Preparation Vessels (LFP-VSL-00001/3)

DWP Operating Unit Group 10, Appendix 9.1 contains a process flow diagram of the Melter Feed Preparation Vessels (LFP-VSL-00001/3). The Melter Feed Preparation Vessels mix LAW concentrate from the Melter Concentrate Receipt Vessels (LCP-VSL-00001/2) with glass formers and sucrose from the glass former feed hoppers. The LFP Melter Feed Preparation Vessels (LFP-VSL-00001/3), their internal components, and the associated ancillary equipment include the following:

- One mechanical agitator (LFP-AGT-00001/3)
- Two vertical pumps (LFP-PMP-00001A/B) or (LFP-PMP-00003A/B)
- Instruments, including liquid level measurement
- Internal spray wash nozzles
- Overflow line to the common header to C3/C5 Drains/Sump Collection Vessel (RLD-VSL-00004)
- Vent line to the vessel vent collection header
- Sample lines to auto samplers (ASX-SMPLR-00012/13)
- Valve bulges LFP-BULGE-00001/2.

The vessel pumps LFP-PMP-00001A/B and LFP-PMP-00003A/B transfer waste using valve bulges, LFP-BULGE-00001/2. Valves in the bulge allow melter feed to be routed to the associated Melter Feed Vessel (LFP-VSL-00002/4) or to the Plant Wash Vessel (RLD-VSL-00003) if the Melter Feed

Preparation Vessels (LFP-VSL-00001/3 are being cleaned out. The vessel contents can be circulated through the pump and injected back into the vessel in the recirculation mode. In addition, melter feed can be pumped between the two Melter Feed Preparation Vessels (LFP-VSL-00001/3), or directed to the ASX system for sampling (ASX-SMPLR-00012/13).

Melter Feed Vessels (LFP-VSL-00002/4)

DWP Operating Unit Group 10, Appendix 9.1 contains a process flow diagram of the Melter Feed Vessels (LFP-VSL-00002/4). The Melter Feed Vessels receive blended melter feed, consisting of LAW concentrate and glass formers, from the Melter Feed Preparation Vessels (LFP-VSL-00001/3). Each Melter Feed Vessel (LFP-VSL-00002/4) are equipped with the following:

- One mechanical agitator (LFP-AGT-00002/4)
- Six Air Displacement Slurry (ADS) pumps (LFP-PMP-00007 through 12) or (LFP-PMP-00013 through 18)
- One vertical pump (LFP-PMP-00002/4)
- Internal spray wash nozzles
- Instruments, including liquid level measurement
- Overflow lines to the common header to C3/C5 Drains/Sump Collection Vessel RLD-VSL-00004
- Vent line to the vessel vent collection header
- Sample lines to auto samplers (ASX-SMPLR-00012/13)
- Valve bulges (LFP-BULGE-00001/2)

The feed vessel pumps (LFP-PMP-00002/4) transfer waste feed through the valve bulges LFP-BULGE-00001/2. Valve alignment in the bulges allows the waste feed to be pumped between all four vessels: the two Melter Feed Preparation Vessels (LFP-VSL-00001/3) and the two Melter Feed Vessels (LFP-VSL-00002/4). Waste feed can also be transferred from the Melter Feed Vessels to the Plant Wash Vessel (RLD-VSL-00003) for vessel cleanout, or directs it to the ASX system for sampling (ASX-SMPLR-00012/13). Normally, ADS pumps transfer the melter feed from the melter feed vessel to the melter.

### 4E.2.2 LAW Melter Process (LMP) System

Figure 4A-21 located in Chapter 4A presents a simplified process flow diagram of the LAW Melter Process (LMP) System. DWP Operating Unit Group 10, Appendix 9.1 contains a process flow diagram of the LAW Melter Process (LMP) System. The purpose of the LMP system is to convert a blended slurry of liquid LAW feed and glass former additives into a durable ILAW product. The locally shielded LAW melter system design is based on operating two joule-heated melters located in a C3 environment. Key functions of LMP include containment, joule heated melting, melter feed, and glass discharge.

Miscellaneous Treatment Unit Sub-Systems

Each LAW Melter (LMP-MLTR-00001/2) includes the following major components:

- Melter shell
- Refractory
- Electrodes
- Discharge systems
- Instruments, including level detection, density, temperature, and pressure measurements
- Offgas lines (LOP system)

The LAW Melters (Chapter 4A, Figure 4A-48) have a nameplate capacity of 15 metric tons of glass per melter per day.

The melter shell is comprised of the base, walls, lid, and gas barrier plates structurally supported by the enclosure. Each LAW Melter has a single internal glass chamber with a rectangular surface area. The melter shell inner surface will also minimize the release of melter gases and contaminants in the event of the melter pressurization. A small air purge will be provided for the annular space between the cooling panels and the shell to reduce the deposition of materials. This purge will be driven by melter vacuum.

The melters are equipped with ceramic refractory that have two unique sections. These sections are the refractory in contact with the molten glass pool (glass pool refractory), and the refractory surrounding the gas space above the glass pool (plenum refractory). Glass pool refractory is designed to withstand corrosion from molten glass. The glass pool refractory, used in conjunction with active cooling provided by a water jacket, will provide glass containment, thermal insulation, and electrical isolation. The plenum is lined with refractory designed to withstand hot corrosive gases, thermal shock, and glass and feed splatter.

The melter is powered by three pairs of electrodes that are mounted opposite each other along the long axis of each melter. The glass is discharged through either of two discharge chambers located within one of the long axis walls of the melter. The lid of the melter is composed of layers of refractory backed by a corrosion-resistant metal plate and support structure. The lid also supports the components that are submerged in the melt pool and suspended in the melter plenum. The melter is encased in an integral shielding and secondary containment enclosure. The melter plenum is maintained at a controlled vacuum with offgas system fans and injection of air into the offgas line near the melter exhaust. This assures containment and avoids pressurization.

The LAW melter system has been designed to shield and contain the melter so that no additional shielding or contamination control will be required for normal operations. This has been accomplished by enclosing the melter assembly in a steel box. Shielding is provided by the entire enclosure. Access panels are provided through the external shielding. When removed, these panels will allow access to equipment such as jack-bolts, electrodes, electrode thermocouples, viewing cameras.

## Electrodes/Joule Heating

The LAW Melters (LMP-MLTR-00001/2) are powered by three pairs of electrodes that are located opposite each other. The heat for the LAW Melters (LMP-MLTR-00001/2), startup is provided by temporarily installed radiant electric heaters mounted on the roof of the melter. When a conducting path is established, the melter is heated by passing current between the electrodes through the glass (a process known as *joule heating*). After some time, the LAW Melters (LMP-MLTR-00001/2) reach the operating temperature and slurry feeding can start. The nominal glass melt pool temperature is approximately 1,150 °C. This is measured with thermocouples in thermowells submerged into the pool at various locations. The power to the electrodes is regulated to maintain the temperature within a selected range.

The electrodes will have forced air cooled electrode extensions. The extensions will penetrate the side of the melter below the glass level to minimize the effects of thermal expansion and to minimize the potential for corrosion by sulfate.

Active cooling of the extensions and the use of a water cooling jacket will prevent glass from migrating through the refractory package adjacent to the electrode extension penetrations.

## Melter Feed System

Feed will be introduced to the melter as a slurry through nozzles in the melter lid. Water and volatile constituents in the slurry will evaporate, leaving behind a layer of material known as the cold cap. Waste feed components in the cold cap will undergo chemical reactions, be converted to their respective oxides, and dissolve in the molten glass. The feed rate determines the cold cap coverage on the glass melt pool.

The feed rate can be controlled based on the average plenum temperature measured by plenum thermocouples mounted in the melter lid. New slurry will be added at about the same rate as the cold cap dissolves, maintaining the quantity of cold cap material at a steady level. Air injectors will be used to mix and agitate the molten glass. When the melt level rises to a predetermined upper limit, an air lift mechanism is actuated and glass is discharged to a container.

A list of conditions that stop the waste feed to the LAW Melters (LMP-MLTR-00001/2) is provided below.

- Melter plenum high pressure
- LVP header high pressure
- Loss of offsite power
- High differential pressure across the offgas HEPA filters
- Melter glass pool high level
- Low flow in caustic scrubber recirculation line
- High temperature in either melter lid cooling cavity
- High level in the associated melter feed vessel
- Low/high level in the associated Submerged Bed Scrubbers (SBS) vessel
- High SBS condensate temperature
- Low differential temperature from the offgas/vessel vent and the filter train inlet
- High differential COx concentrations across the mercury mitigation skid.

## Glass Discharge System

Each of the melters (LMP-MLTR-00001/2) have two identical independently operated glass discharge systems to include an airlift riser, a glass pour trough, a discharge chamber and other components and instruments needed to control the discharge of glass into the ILAW container. The melter glass pool level measurement will be used to indicate when to start and stop glass discharge. It also provides alarms for high or low glass pool levels. When a container is required for filling, it is retrieved from the clean container staging area and lowered through the import hatch onto one of the two pour turntable bogies. The bogie travels to a position in front of one of the pour caves. The container is retrieved by one of the four monorail hoists and transported to one of the four pour cave turntables. The container is then rotated into the pour position. A through-wall position sensor confirms that the container is in position prior to lock pin engagement. A through-wall lock pin engages the turntable in its pour position and prevents accidental rotation while the container elevator raises the container to the melter seal head and the container is filled with glass. The level of glass in the container is controlled by an infrared camera and the container load cell.

The glass discharge from the melter is initiated by injecting air or an inert gas at the bottom of the airlift riser. As the gas bubbles rise in the glass they will entrain glass in the riser, which is replaced by glass flowing in from the pool through the riser throat. The glass is lifted to the inlet of the trough, where the air bubbles disengage and the entrained glass flows into the trough. The glass then flows down the trough due to gravity and falls from the pour tip at the end of the trough into the container. The rate of glass discharge is controlled by adjusting the rate at which air is injected into the bottom of the riser.

Instrumentation, alarms, controls, and interlocks will be provided for the LMP to indicate or prevent the following conditions:

- Decrease or loss of melter plenum vacuum.
- Glass temperature that is too high or too low.
- Electrode extension temperature too high.

- Loss of melter cooling water.
- Plugged feed nozzle.
- Overfilling of glass container.

### 4E.2.3 Radioactive and Nonradioactive Liquid Waste Disposal (RLD and NLD) Systems

DWP Operating Unit Group 10, Appendix 9.1 contains a process flow diagram of the Radioactive and Nonradioactive Liquid Waste Disposal (RLD and NLD) System. The functional purpose of the LAW RLD system is to receive mixed waste effluent for interim storage and to transfer the mixed waste effluent to the PTF or the EMF. In addition, mixing and sampling of the mixed waste effluent may be performed in this system as required.

The LAW RLD system receives mixed waste effluent, overflow, drains, condensate, and tank washes from process and building support systems. The LAW RLD tanks collect, store, mix, provide samples to the ASX, and transfer the mixed waste effluent to the PTF Plant Wash Vessel and Treated LAW Evaporation systems in the PTF or EMF. The LAW facility liquid waste that is non-dangerous/ non-radioactive is not normally routed to the RLD system. The LAW mixed waste effluent is collected in one of three permitted RLD tanks:

- Plant Wash Vessel (RLD-VSL-00003)
- LAW C3/C5 Drains/Sump Collection Vessel (RLD-VSL-00004)
- SBS Condensate Collection Vessel (RLD-VSL-00005)

The SBS Condensate Collection Vessel (RLD-VSL-00005) and the Plant Wash Vessel (RLD-VSL-00003) are located in the LAW effluent cell. The C3/C5 Drains/Sump Collection Vessel (RLD-VSL-00004) is located below grade to provide fire protection water collection and to collect effluents from the wet electrostatic precipitator, and C3/C5 gravity floor drains and sumps.

Sources of effluents into the RLD system are production and nonproduction-related activities. Production effluents are mixed waste liquids or slurries generated by the waste treatment process. These effluents are routed to the SBS Condensate Collection Vessel (RLD-VSL-00005). Liquid effluent from nonproduction activities, such as vessel, equipment and cell/cave washes, and sump discharges, are routed to one of the three vessels, depending on the nature of the effluent. Dangerous or mixed waste is routed to either the Plant Wash Vessel (RLD-VSL-00003) or the C3/C5 Drains/Sump Collection Vessel (RLD-VSL-00004). Liquid that is nondangerous/nonradioactive is routed to the C1/C2 Floor Drain/Sump Collection Tank in the NLD system.

#### Plant Wash Vessel (RLD-VSL-00003)

DWP Operating Unit Group 10, Appendix 9.1 contains a process flow diagram of the Plant Wash Vessel (RLD-VSL-00003).

This vessel is designed to receive the total volume of either the largest vessel in the LAW vitrification facility or the largest volume from the vessel/equipment wash or drain in the LAW vitrification facility. The largest volume is from the SBS Condensate Collection Vessel (RLD-VSL-00005). The Plant Wash Vessel (RLD-VSL-00003) is normally empty, but infrequently can receive plantwashes from the following sources:

- Sumps (RLD-SUMP-00028 through 32), (RLD-SUMP-00035 and 36)
- Vessel washes or off-specification material from process vessels (LCP-VSL-00001/2) and (LFP-VSL-00001/2/3/4)
- Drains from the berm surrounding Caustic Collection Vessel (LVP-TK-00001)
- Suspect radioactive material from the C1/C2 Drains/Sump Collection Vessel (NLD-VSL-00005)
- Transfers from the C3/C5 Drains/Sump Collection Vessel (RLD-VSL-00004)

- Off-normal transfers from the SBS Condensate Collection Vessel (RLD-VSL-00005)
- Overflows from the SBS Condensate Collection Vessel (RLD-VSL-00005)

Plant Wash Vessel (RLD-VSL-00003) has two vertical cantilever pumps (RLD-PMP-00001A/B) for transfer and sampling and one mechanical agitator (RLD-AGT-00001) for mixing of effluent. The Plant Wash Vessel (RLD-VSL-00003) is equipped with internal spray nozzles for flushing the tank interior, if needed.

The contents of the LAW Plant Wash Vessel (RLD-VSL-00003) are normally transferred to the Plant Wash Vessel PWD-VSL-00044 in the PTF or to the EMF. In addition, the contents can also be routed to the LAW SBS Condensate Receipt Vessel TLP-VSL-00009A/B in the PTF, SBS Condensate Collection Vessel (RLD-VSL-00005) or EMF. Content of the LAW Plant Wash Vessel (RLD-VSL-00003) is analyzed via auto sampler (ASX-SMPLR-00012) before transferred to the PTF or EMF.

The vessel is fitted with level instrumentation. The vessel is vented into a common vessel ventilation header that drains into the C3/C5 Drains/Sump Collection Vessel (RLD-VSL-00004).

### LAW C3/C5 Drains/Sump Collection Vessel (RLD-VSL-00004)

DWP Operating Unit Group 10, Appendix 9.1 contains a process flow diagram of the LAW C3/C5 Drains/Sump Collection Vessel (RLD-VSL-00004).

The RLD C3/C5 Drains/Sump Collection Vessel (RLD-VSL-00004), its internal components, and the associated ancillary equipment include the following:

- Recirculation/transfer pumps (RLD-PMP-00002A/B) located in (RLD-BULGE-00001)
- Three mixing eductors (RLD-EDUC-00001A/B/C)
- Vessel overflow line to secondary containment (RLD-SUMP-00028)
- Vent line to a common header
- Sample line to and from auto sampler (ASX-SMPLR-00013)
- Instruments, including liquid level measurement
- Valve and Pump Bulge (RLD-BULGE-00001)

The C3/C5 Drains/Sump Collection Vessel (RLD-VSL-00004) normally receives liquid effluent from the following sources:

- Melter 1/2 Wet Electrostatic Precipitators (WESP) (LOP-WESP-00001/2) drains
- Overflows from other LAW process tanks through the overflow header
- Sump contents from the filter room and floor drains from C3/C5 areas
- Drains from the LVP vessel vent header
- Drains from auto sampler (ASX-SMPLR-00012/13)
- HVAC condensate drains

This vessel is designed to contain the maximum amount of fire protection water and the volume equivalent to the largest C3/C5 floor area wash. The C3/C5 Drains/Sump Collection Vessel (RLD-VSL-00004) routinely collects liquid drained from the Melter WESP (LOP-WESP-00001/2). The overflow from the Melter Concentrate Receipt Vessels (LCP-VSL-00001/2) is also routed to the C3/C5 Drains/Sump Collection Vessel.

Routine process-related effluent from WESP drains will be routed from this vessel to the SBS Condensate Collection Vessel. Effluent generated from other sources will drain to the Plant Wash Vessel (RLD-VSL-00003) until it reaches a predetermined level to maintain adequate capacity for fire protection water.

The C3/C5 Drains/Sump Collection Vessel is located in an enclosed C3/C5 cell area. The C3/C5 Drains/ Sump Collection Vessel overflows to a sump in the same cell. During normal operation, the effluent characterized in the C3/C5 Drains/Sump Collection Vessel is expected to be transferred to the Treated LAW Evaporation System (TLP) system via the SBS Condensate Collection Vessel (RLD-VSL-00005).

SBS Condensate Collection Vessel (RLD-VSL-00005)

DWP Operating Unit Group 10, Appendix 9.1 contains a process flow diagram of the SBS Condensate Collection Vessel (RLD-VSL-00005).

SBS Condensate Collection Vessel (RLD-VSL-00005), its internal components, and the associated ancillary equipment include the following:

- Two transfer pumps per vessel (RLD-PMP-00003A/B)
- One mechanical agitator (RLD-AGT-00002)
- Vessel overflow line to the Plant Wash Vessel (RLD-VSL-00003)
- Vent line to a common header
- Instruments, including liquid level measurement
- Valve and Pump Bulge (RLD-BULGE-00004)

The SBS Condensate Collection Vessel (RLD-VSL-00005) receives effluent from the following sources:

- SBS Scrubbers (LOP-SCB-00001/2)
- SBS Condensate Vessels (LOP-VSL-00001/2)
- C3/C5 Drains/Sump Collection Vessel (RLD-VSL-00004).

The SBS Condensate Collection Vessel is fitted with level instrumentation and is vented into a common vessel ventilation header that drains into the C3/C5 Drains/Sump Collection Vessel (RLD-VSL-00004). The SBS Condensate Collection Vessel (RLD-VSL-00005) is equipped with two vertical cantilever pumps (RLD-PMP-00003A/B) for recirculation, transfer, and sampling, and one mechanical agitator (RLD-AGT-00002) for mixing. Sampling capability is provided to an auto sampler (ASX-SMPLR-00012). The SBS Condensate Collection Vessel (RLD-VSL-00005) has two internal spray nozzles for flushing the tank interior, if needed.

The contents of the SBS Condensate Collection Vessel (RLD-VSL-00005) are normally transferred to the LAW SBS Condensate Receipt Vessels (TLP-VSL-00009A/B) in the PTF or to the EMF. Transfers can be routed to the PTF Plant Wash Vessel (PWD-VSL-00044), LAW Plant Wash Vessel (RLD-VSL-00003), or to the EMF. Content of the SBS Condensate Collection (Vessel RLD-VSL-00005) can be analyzed via auto sampler (ASX-SMPLR-00012).

The SBS Condensate Collection Vessel overflows to the Plant Wash Vessel (RLD-VSL-00003).

### 4E.2.4 LAW Radioactive Solid Waste Handling (RWH) System

The LAW RWH system does not include permitted tanks or MUs. The purpose of the RWH system is to provide equipment to facilitate change out and packaging of secondary radioactive solid waste (RSW) in the LAW facility. The typical RSW in the LAW facility include the melter consumables, such as melter bubblers, spent HEPA filters, and failed process cell equipment. The LAW Radioactive Solid Waste Handling (RHW) system provides crane coverage to support these activities.

The vessels are designed for 40 years of service. However, in the event of a failure, the process vessel will be prepared for export by rinsing, disconnection of the process lines, and decontamination. The vessel will be lifted out of the process cell and covered to prevent a spread of contamination. The vessel will be placed in an approved package staged for vessel receipt. Once closed and secured, the package,

containing the vessel, will be delivered to an appropriate TSD facility. A similar process in reverse will be used for the introduction and installation of new LAW process vessels.

It is anticipated that LAW Melters will require periodic replacement. When the end of a melter's operational life is reached, as much residual molten glass as is practical will be removed as immobilized glass product. The LAW Melter will be allowed to cool and then will be disconnected. Openings in the melter shell will be seal welded, and the melter shell will be decontaminated if required, and transported to an appropriate TSD facility.

Disposal of miscellaneous mixed waste streams created during operation will be done by packaging at the point of generation. Localized collection points and disposal routes will be established at logical and optimal locations to accommodate maintenance and operations. Waste containers will be transferred to a staging area where packages will be weighed, labeled, and decontaminated for nonfixed contamination, if needed, prior to export. The packaged waste will then be stored at the WTP, and as needed transported to a Hanford site or off-site commercial treatment facility prior to final disposal at the Hanford site.

### 4E.2.5 ILAW Glass Container Handling

The ILAW glass container handling systems are support systems that do not include permitted tanks or MUs. The ILAW glass container handling systems provide equipment to import the ILAW containers, transfer within the LAW facility, and export for treatment and disposal. The ILAW glass container handling activities will consist of the following systems:

- LAW container receipt handling (LRH) system
- LAW container pour handling (LPH) system
- LAW container finishing handling (LFH) system
- LAW container export handling (LEH) system

The individual systems and their primary functions are described below:

#### LAW Container Receipt Handling (LRH) System

The primary function of the LRH system is to provide mechanical handling equipment to transfer empty containers from initial receipt in the LAW Melter Equipment Support Handling (LSH) system truck bay to the pour tunnel. The LRH system accepts empty ILAW containers into the LAW facility and transports the containers to the LPH system where glass-filling operations are performed.

#### Container Receipt

After removal of the shipping over-wrap and initial receipt inspection, the containers are placed on a conveyor system and transferred into the facility as needed. New containers are then logged into the tracking system.

#### Container Import

Prior to the need for additional containers, a final inspection and transfer takes place in the container import bay. Each new container is moved to a container inspection stand. This allows an operator to assess the upper head/lifting flange area, including the "fill" opening, and to observe the inside of the container with a light.

The rest of the container is inspected as required, then the container is placed on the import line 1 or 2 staging conveyer, and the tracking log is updated. If the container inspection fails, it is logged and tagged appropriately and set aside.

Each time a container is placed on the conveyor, an operator initiates a conveyor transfer. The transfer serves to index containers on the staging conveyor forward so there is always a container in the "pickup" position on the airlock conveyor.

Container import instrumentation, alarms, controls, and/or interlocks will be provided as follows:

- The hatches are interlocked with the hoist and bogies so the hatch cannot be opened unless a process crane is positioned above the hatch. Conversely, the process cranes cannot leave hatch positions unless the hatch is closed and locked.
- The hatches are interlocked with the bogies so that the hatches cannot open unless a bogie is positioned below the hatch. The interlock prevents the bogie from leaving the hatch position unless the hatch is closed.

## LAW Container Pour Handling (LPH) System

The LPH system receives empty containers from the LRH system, positions empty containers for filling, and transfers filled and cooled containers to the LFH system. Typical activities within the LPH system include container transfers from the container transfer bogies into the buffer storage area, container transfers within the buffer storage area, transfer from the buffer storage area to the transfer tunnel, and for container rework, if necessary. Each of the LAW melters has two glass discharge systems that operate independently. Each melter discharge chamber is aligned with a glass pour cave under the melter cell with associated features for filling a container with glass. Containers can be filled using one pour cave, using alternating caves, or both caves at the same time using alternating lifts. The major pieces of equipment include the container turntable, container elevator, transfer bogies, and monorail hoists.

## Container Turntable, Container Elevator, Glass Pour Seal Head

A container turntable is provided in each pour cave for handling containers. The turntable accommodates three containers and rotates to position them at three stations: the container transfer station, the container fill station, and the container cooling station. At each container location in the turntable is a lower overpack section that locates the containers and provides support. Containers remain in the overpack during the elevating and glass filling cycle.

As containers are filled and cooled, the turntable rotates to the transfer station where container changeout occurs. Cooled, full product containers are removed from the turntable and replaced with empty containers. The turntable is rotated to position the empty container at the fill station. The container elevator raises the empty container and lower overpack up to the glass pour seal head for container filling.

The elevator is equipped with features to provide a weight of the product container being supported. Weight is used to verify that a container is present and that it is empty. The weight must be between established minimum and maximum values for glass pouring to occur. Additionally, the weight can be used to ensure that container filling is occurring and to provide the rate of glass pouring. The elevator weight is not intended to give an accurate weight of the container; it is merely used as an indication of container presence and condition.

The glass pour seal head is the interface between the melter discharge chamber and the product container during glass pouring. The seal head consists of a metal bellows arrangement that is connected to the melter discharge chamber with the other end of the bellows open for interface with product containers.

Container fill level is monitored by a thermal imaging camera. The camera provides a view of the diameter and the upper one-half of a container. The thermal imaging camera indicates container fill level for primary control of fill rate and pour shut off. In the event of primary level detection failure, a gamma detector activates a high-high level shutdown.

The container is filled using several pours. The pour process occurs more quickly than glass can be made in the melter, resulting in lag time between pours. Rapid pouring allows molten glass to flow out to all edges of the container. Following the final glass pour batch, the container remains in position to provide initial container cooling and containment of final glass discharges. The container is then lowered to the turntable. The turntable is again rotated, placing the recently filled container at the cooling/venting

station. Container cooling continues while another container undergoes the fill cycle. Once cooled, the container is rotated to the transfer position for export and the process is repeated.

### Container Transportation

Another function of the LPH system is to provide product container transportation between the container transfer bogie and the pour cave turntable. The system transfers empty product containers from the container transfer bogie to the melter turntable, and transfers full product containers from the turntable to the transfer bogie in a manner that supports the facility throughput goals.

Concrete walls separate the pour caves from the bogie transfer tunnel. These walls have doorways large enough to allow the hoist units loaded with new or filled product containers to pass through them. The doorways are fitted with steel shield doors.

Concrete walls also separate the monorail maintenance facility from the bogie transfer tunnel. These walls have openings sized to prevent an ILAW container from entering the maintenance area. These doorways are also fitted with steel shield doors that provide radiological shielding from sources in the transfer tunnel during hands-on maintenance activities in the monorail maintenance facility.

Pour cave transfer operations are conducted remotely with only a few exceptions. Maintenance and recovery operations in the bogie transfer tunnel, such as a jammed grapple, may require hands-on intervention. Monorail hoist maintenance operations conducted in the maintenance facility are completely hands-on. Monorail hoist recovery operations can become a hands-on/remote combination depending on the failure details.

### Buffer Storage Area

The LPH system provides a buffer storage area for ILAW containers in the event downstream processing lines become backed up. The buffer storage area includes the container rework area. Anticipated activities include ILAW container transfers into the buffer storage area from the container transfer bogies, container transfers within the buffer storage area, container transfers from the buffer storage area to the transfer tunnel, and container transfers to the container rework area, where ILAW container rework is conducted. The buffer storage area is adjacent to a crane maintenance facility. The crane maintenance area is shielded from the buffer storage area to allow hands-on maintenance in the crane maintenance facility and transfer tunnel while containers are present in the buffer storage area.

The LPH transfer tunnel runs from the bogie maintenance area on the west end of the facility to the buffer storage area at the east end of the building. The buffer storage area import/export positions are located within the container transfer corridor. Concrete walls with passages for ILAW containers separate the north and south buffer storage areas and the container transfer corridor. The passages are equipped with manually operated steel shield doors to support maintenance or bogie recovery operations that might be required in this portion of the transfer tunnel. The LFH hoists operating in the lidding area above this section of the container transfer corridor transfer ILAW containers to and from the buffer storage area import/export position.

Buffer storage area container transfer operations are conducted with the use of a bridge crane. The crane rails begin in the crane maintenance facility adjacent to the north end of the buffer storage area and extend south. The runway provides crane coverage to the crane maintenance area, the ILAW container buffer storage area, the container transfer corridor, and the two container import/export positions. There are container storage positions in the north and south portions of the buffer storage area, and one rework position also in the south portion of the buffer storage area. The rework position is located in the southeast corner of the ILAW container buffer storage area/rework area. The rework position can be fitted with a powered turntable, a pair of master-slave manipulators. A shielded window is located in this area. Directly east of the rework position, on the cold side of the buffer storage area, is a rework area operating platform that provides operator access to the master-slave manipulators and shielded window.

A winch is provided to support maintenance operations on the buffer storage area bridge crane. A steel shield door and a concrete wall separate the crane maintenance facility from the buffer storage area, allowing maintenance operations to be conducted while the buffer storage area contains full ILAW containers.

## LAW Container Finishing Handling (LFH) System

Figure 4A-24 located in Chapter 4A presents a simplified process flow diagram of the LAW container finishing handling system (LFH). There are two LFH finishing lines. The functions of the LFH system are to verify the container fill level, determine if inert fill is required, complete closure of the ILAW container, decontaminate the exterior of the container, and verify surface contamination levels before exporting the container. The system also has the ability to sample the solidified glass, place the glass shards in a vial, and make these vials available for transfer to the laboratory.

The filled containers are raised from the transfer tunnel into one of two finishing lines and placed on a bogie. The bogie is used to shuttle the container between lidding area stations and the container decontamination station. The bogie with the container travels to the shard sampling station. A sample of the glass may be taken with the glass shard sampler. Based on the measured level in the container, inert fill is added as needed. From there the bogie travels to the container lidding station where the lid is mechanically secured to the container. After mechanically sealing the lid to the container, the bogie travels to the decontamination station. Once the container meets C2 contamination criteria, the bogie moves into the monitoring/export station. The container is then exported for shipment to the disposal site. If the container exceeds the dose rate, it is classified as an out-of-specification container.

In the off-normal event that an out-of-specification ILAW container is generated, the container will be segregated and a corrective action plan generated. Container characterization data will be evaluated to verify that the ILAW container can be disposed in accordance with approved Hanford Site Solid Waste Acceptance Criteria (HSSWAC).

Instrumentation, alarms, controls, and interlocks will be provided for the LFH system to indicate or prevent the following conditions:

- Opening of personnel access door when container is present in the line transfer station.
- Opening of personnel access door when either line transfer trap doors are open.
- Opening of both line transfer trap doors at the same time.
- Opening of personnel access door if airborne contamination levels are higher than design contamination classification within the line transfer station.

## Decontamination Station

A decontamination station is located within each of the finishing lines in the LAW vitrification facility. After the ILAW container has been sealed, it is transported to the decontamination station. Equipment items located in the decontamination station include the carbon dioxide decontamination manipulator, turntable, and exhaust system. Most other items are located outside of the decontamination station, including the carbon dioxide pelletizer, the transport air compressor, and the liquid carbon dioxide storage and delivery system, exhaust fans, and HEPA filters.

The containers are decontaminated using carbon dioxide pellets. The carbon dioxide decontamination manipulator is fitted with an exhaust recovery hood to recover the effluent from the decontamination operation. Debris produced during decontamination is collected with a HEPA filtered exhaust system. This gas stream is then routed to the plant vent system where it is passed through the plant's HEPA filters before being discharged through the stack.

Once the container is decontaminated, it is transported from the decontamination station to the swabbing station.

Instrumentation, alarms, controls, and interlocks will be provided for the decontamination station to indicate or prevent the following conditions:

- Opening of the decontamination or decontamination/ swabbing containment door during decontamination.
- Opening of the decontamination and decontamination/ swabbing containment door at the same time.

## Swabbing and Swabbing-Monitoring Station

At the swabbing station, containers are surveyed for loose surface contamination to verify that they meet the contamination requirement. The swabbing machine maneuvers the swabs over the container surface. After a prescribed area is covered, the contaminated swabs are exported away from radioactive source for monitoring to determine gamma-beta levels for smearable contaminates. If contamination levels exceed C2 criteria, the container is transported back into the decontamination station for rework. If the container meets C2 criteria, the turntable bogie moves into the export station.

Once the container is transported into the monitoring/export station from the swabbing station, a gamma monitor measures the dose rate of the decontaminated container.

If the container exceeds the specified dose requirement, it is classified as an out-of-specification container; otherwise, the dose rate is measured and is recorded within the container's records. The container is then exported out of the monitoring/export station for shipment to the disposal site.

Instrumentation, alarms, controls, and interlocks will be provided for the swab monitoring station to indicate or prevent the following conditions:

- Personnel access when a container is present in swab monitoring station.
- Opening of decontamination/ swabbing or swabbing/export containment door during swabbing.
- Opening of personnel access door when container is present in the swabbing station.
- Opening of personnel access door if airborne contamination levels are higher than design contamination classification within the decontamination area.
- Opening of personnel access door if high concentration of carbon dioxide is present within the decontamination area.
- Rotation of pour turntable during swabbing.
- Export of swab if radiation levels from swab are higher than design radiation classification in the operational area.

## LAW Container Export Handling (LEH) System

The purpose of the LEH system is to load ILAW containers onto a transportation vehicle for transfer to a Hanford Site TSD unit. This system is contained in a truck bay on the east end of the LAW vitrification facility.

Under normal operations the ILAW container will be received from the LFH system through a hatch. Radiological dose rate and contamination level are determined and verified to be within limits prior to entering the LEH system. An overhead crane lifts the ILAW container through the hatch and places it on the transportation vehicle.

Operations are remote and maintenance is "hands-on" in the LEH system. The overhead crane is provided with closed circuit television cameras for operation when radiological conditions do not permit personnel access during the ILAW container loading.

### 4E.2.6 LAW Melter Equipment Support Handling (LSH) System

The primary function of the LSH system is to provide the equipment and support necessary to complete maintenance tasks on all melters and equipment in the melter gallery of the LAW vitrification facility. The primary equipment used in support of the maintenance efforts are:

- Consumable change-out boxes
- Consumable change-out boxes storage racks
- Consumable change-out boxes preparation stand
- Melter gallery process cranes
- Consumable change-out boxes handler
- Lifting head
- Melter gamma gate
- Shield cover removal tool

Melter consumables will be removed through the top of the melter shielding. Melter consumable items will be those that require routine and nonroutine maintenance, but provide necessary functions to continue melter operations. The routine consumable items will include bubbler assemblies. New bubbler assemblies will be shipped to the facility and will be installed into the melter.

Spent bubblers will be extracted from the melter, and transferred into a consumable change-out box (CCB) and then transferred into a box for treatment and disposal.

Refractory thermocouples, airlifts, level detectors, feed nozzles, and film coolers will be removed, bagged and loaded into the CCB and then transferred to a disposal box. These waste management tasks will be considered nonroutine and are replaced on an as-needed basis. The waste is disposed of as secondary waste according to secondary waste management procedures.

### 4E.2.7 LAW Melter Handling (LMH) System

The LAW LMH system does not include permitted tanks or MUs. The LAW LMH system provides the mechanical handling equipment associated with the import of new Locally Shielded Melters (LSMs) and the export of failed or spent LSMs. The LMH system also provides specific facility structures to support LAW LSMs import and export operations, as well as miscellaneous mechanical handling equipment to support operations.

The function of System LMH include:

- Transfer new LAW melter from equipment pad to LAW Melter operating position (L-0112).
- Transfer equipment between C1/C2 airlock (L-0113) and monorail hoist maintenance rooms (L-B023A/ L-B023B).
- Transfer spent melters that are seal-welded and ready for transport from operating position (L-0112) to equipment pad.

The LAW Assembly/Staging Pad Area is located external to the LAW facility at an elevation of +3’-0”. New melters are assembled in the assembly/staging pad area. The East side of the pad is configured as a loading dock to permit transfer of a spent LAW melter to the Tank Operating Contractor (TOC) supplied melter transport system. The pad incorporates LAW melter rails and provides multiple embed locations to mount a winch assembly.

The LAW Winch Assembly provides the motive force for transferring the new or spent LSM along fixed melter rails. The winch assembly operates in conjunction with pulley block assemblies to transfer an LSM. The winch assembly is only installed for LSM transfer operations and then is removed and stored.

When the LAW melter has reached the end of its operating life, it is disconnected from all systems and all penetrations on the enclosure are seal welded before it is be moved out of the LAW vitrification facility. Prior to deployment the LSM is surveyed and decontaminated as required and is loaded on the TOC melter transport system.

## 4E.3 Containment Buildings

This section describes how these units are designed and operated, in accordance with the requirements of WAC 173-303-695, which incorporates 40 CFR 264 Subpart DD, "Containment Buildings", by reference. Regulatory citations in this section list the applicable section of the CFR to make it easier for readers to find the requirement. A typical containment building is illustrated in Chapter 4A, Figure 4A-59.

There are twenty-one containment buildings at the WTP: five located within the pretreatment facility; six in the LAW vitrification facility; and ten in the HLW vitrification facility. The regulated units in the LAW vitrification facility are:

- LAW LSM gallery containment building (L-0112)
- ILAW container finishing containment building (L-0109B, L-0109C, L-0109D, L-0109E, L-0115B, L-0115C, L-0115D, L-0115E, L-0116A)
- LAW vitrification facility consumable import/export containment building (L-0119B)
- LAW vitrification facility C3 workshop containment building (L-0226A)
- LAW pour cave containment building (L-B009B, L-B011B, L-B011C, L-B013B, L-B013C, L-B015A)
- ILAW container buffer storage containment building (L-B025C, L-B025D)

Table 4E-5 summarizes the units within the LAW vitrification facility. The following figures and drawings found in DWP Operating Unit Group 10 provide further detail for the containment buildings:

- Figure 4A-59 depicting common features of containment buildings.
- General arrangement figures and drawings showing locations of containment buildings.
- Waste management area figures showing containment building locations to be permitted.

Control of fugitive emissions from containment buildings is described in *Fugitive Emissions Control Description* (24590-WTP-PER-HV-02-001) located in Operating Unit Group 10 Appendix 7.15.

The following sections address each of the containment buildings.

### 4E.3.1 LAW LSM Gallery Containment Building (L-0112)

There will be six containment buildings in the LAW vitrification facility. The first is the LAW LSM gallery containment building, which will house the two LAW Melters. The LAW Melters are designed to include a roller or wheel assembly that travels on rails that will be used to move the melters in and out of the containment building. Spent LAW Melters will be disconnected from the offgas system, feed lines, electrical lines, and instrumentation. Open ports will be seal welded. The sealed exterior of the melter will be decontaminated, if needed, prior to removal from the containment building.

#### LAW LSM Gallery Containment Building Design

The LAW LSM gallery containment building will be completely enclosed within the LAW vitrification facility. The unit will be designed to prevent the release and exposure of dangerous constituents to the outside environment. The design and construction of the LAW vitrification facility exterior will prevent water from running into the facility.

The roof of the LAW vitrification facility will consist of metal roofing, roof insulation, and a vapor barrier. Rainwater run-off will be collected by roof drains and a drainage system with overflow drains. The approximate dimensions of the unit are summarized in Table 4E-5.

The melter feed slurry will be introduced to the LAW melters through stainless steel feed lines and specialized reinforced flex hoses. The feed lines in between the melter feed vessel and the melter will pass through the Melter Feed Encasement Assembly (LMP-LDB-00001/00002) that functions as secondary containment and provides leak detection. The encasement assembly and associate bellows are provided with a conductivity cable lead detection system. A drain within the assembly has also been incorporated into the design to allow drainage to a sump located in the adjacent process room.

The containment building design requirements of 40 CFR 264.1101(b) do not apply because any dangerous wastes with free liquids will be managed on portable secondary containment that meets the requirements of WAC 173-303-630(7). The only anticipated source of liquids in the LSM gallery are the waterlines to the two film cooler pipes, and the melter and melter lid cooling water piping systems. These clean water lines (isolated from contact with dangerous wastes) will be instrumented to detect leaks. The melter annulus and the gas barrier contain cooling liquids within the locally shielded melter and are both provided with leak detection. The melter lid cooling system is also a clean water system that is provided with temperature indication, level transmitters, and flow and pressure indicators to identify a potential leak. A rupture of either water line or a waste feed line would be an abnormal event and the liquid would be contained within the locally shielded melter or in the encasement assembly and corrective measures would be initiated. Corrective action would start with closure of the supply line and draining of remaining water outside the melter, and could require feed cutoff and melter idling or shut down.

### LAW LSM Gallery Containment Building Structure

The LAW LSM gallery containment building will be fully enclosed within the LAW vitrification facility. Therefore, structural requirements for the containment building will be met by the design standards of the LAW vitrification facility. The design will ensure that the unit has sufficient structural strength to prevent collapse or failure. Within the containment building will be partitions between the LSMs. DWP Operating Unit Group 10, Supplement 1 provides documentation that the seismic requirements for the LAW vitrification facility meet or exceed the Uniform Building Code Seismic Design Requirements.

### LAW LSM Gallery Containment Building Materials

The LAW LSM gallery containment building will be constructed of steel-reinforced concrete. The interior floor and the walls of the unit will be covered with an epoxy coating to protect the concrete and facilitate decontamination.

### Use of Incompatible Materials for the LAW LSM Gallery Containment Building

The epoxy coating will be applied to the concrete floor and a portion of the walls of the unit. The coating will be compatible with the wastes that will be managed in the containment building. The wastes to be managed in this containment building will include LAW LSM melters and consumables, which may be metallic parts and failed equipment. Reagents that could impact the epoxy coating will not be used within the unit.

### Primary Barrier Integrity in the LAW LSM Gallery Containment Building

The LAW LSM gallery containment building will be designed to withstand loads from the movement of personnel, wastes, and handling equipment. The seismic design criteria found in DWP Operating Unit Group 10, Supplement 1 ensures that appropriate design loads, load combinations, and structural acceptance criteria are employed at the WTP.

Certification of Design for the LAW LSM Gallery Containment Building

Prior to initial receipt of dangerous and mixed waste, certification by a qualified registered professional engineer that the LAW LSM gallery containment building meets the design requirements of 40 CFR 264.1101(a), and (c) will be obtained. The requirements of 40 CFR 264.1101(b) do not apply to this design because any dangerous waste containing free liquids will be managed on portable secondary containment that meets the requirements of WAC 173-303-630(7).

Operation of the LAW LSM Gallery Containment Building

Operational and maintenance controls and practices will be established and followed to ensure containment of the waste within the LAW LSM gallery containment building, as required by 40 CFR 264.1101(c)(1). Activities in the building will be remotely conducted.

Maintenance of the LAW LSM Gallery Containment Building

The epoxy coating will be constructed and maintained in a manner that will be free of significant cracks, gaps, corrosion, or other deterioration. The concrete coating will be free of corrosion or other deterioration because it will be compatible with materials that will be managed in the containment building, including the glass waste and containerized or un-containerized waste and equipment.

Measures to Prevent Tracking Wastes from the LAW LSM Gallery Containment Building

The unit is designed to manage LAW melters. When the LAW melter has reached the end of its operating life, it is disconnected from all waste feed and utility systems and all penetrations on the enclosure are seal welded so glass waste will be contained within the melter. This design will prevent waste from entering the containment building and thus from being tracked from the unit.

The unit will be classified as a C3 contamination area, which allows only limited personnel access. Access will be required only for non-routine events such as when melters are determined to be waste, approximately every 5 years, or when equipment must be dismantled. Dry decontamination methods will be used to decontaminate the melter and gallery areas.

Procedures in the Event of Release or Potential for Release from the LAW LSM Gallery Containment Building

Conditions that could lead to a release from the LAW LSM gallery containment building will be corrected on a schedule intended to preclude a release that could be hazardous to public health or the environment.

In the unlikely event of a release of dangerous wastes from the containment building, actions required by 40 CFR 264.1101(c)(3)(i) through (iii) will be taken. Specific administrative and operating methods that will be used to satisfy this requirement will be developed prior to initial receipt of dangerous and mixed waste. The methods will be followed to repair conditions that could lead to a release.

Inspections of the LAW LSM Gallery Containment Building

An inspection program will be established to detect conditions that could lead to release of wastes from the LAW LSM gallery containment building. The inspection and monitoring schedule and methods that will be used to detect releases from the unit are included in DWP Operating Unit Group 10, Chapter 6.0.

### 4E.3.2 ILAW Container Finishing Line Containment Building (L-0109B, L-0109C, L-0109D, L-0109E, L-0115B, L-0115C, L-0115D, L-0115E)

The ILAW container finishing line containment building will be located in the LAW vitrification facility. It will be used for managing ILAW containers that have cooled sufficiently to be closed and prepared for finishing. Typical waste management activities performed in this containment building include storage of open waste containers and container decontamination.

An ILAW container is transported from an inert filling and lidding room, to a decontamination room, and finally to a swab and monitor room, and then out of the containment building. This sequence of rooms is considered a finishing line. There are two finishing lines within the ILAW container finishing line containment building.

### ILAW Container Finishing Containment Building Design

The ILAW container finishing containment building will be completely enclosed within the LAW vitrification facility. It will be designed to prevent the release and exposure of dangerous constituents to the outside environment. The design and construction of the LAW vitrification facility exterior will prevent water from running into the facility. The roof of the LAW vitrification facility will consist of metal roofing, roof insulation, and a vapor barrier. Roof drains and drainage system with overflow drains will collect run-off. The approximate dimensions of the unit are summarized in Table 4E-5.

### ILAW Container Finishing Containment Building Structure

Because the ILAW container finishing containment building will be a concrete-walled structure fully enclosed within the LAW vitrification facility, its structural requirements will be met by the design standards of the LAW vitrification facility. The design will ensure that the unit has sufficient structural strength to prevent collapse or failure. DWP Operating Unit Group 10, Supplement 1 provides documentation that the seismic requirements for the LAW vitrification facility meet or exceed the Uniform Building Code Seismic Design Requirements.

### ILAW Container Finishing Containment Building Materials

The ILAW container finishing containment building will be constructed of steel-reinforced concrete. The interior floor and a portion of the walls of the decontamination rooms will be coated with an epoxy coating to facilitate decontamination of the concrete.

### Use of Incompatible Materials for the ILAW Container Finishing Containment Building

The primary concrete barrier will have an epoxy coating. This epoxy coating will be compatible with the waste managed in the unit. The waste to be managed includes vitrified waste glass within the stainless steel containers. This coating will be present in the two inert fill rooms and the two swab and monitor rooms.

The epoxy coating will be provided to protect the concrete and facilitate decontamination. The coating will be compatible with the wastes that will be managed, which will include filled ILAW containers. Glass waste is not expected to be present on the exterior of the containers, due to the design of the melter pour stations. The interior is the only portion of the container that will be exposed to the glass waste. Additionally, the removal of glass will occur in the inert fill and lidding rooms. Carbon dioxide pellets, compatible with the stainless steel container, will be used to remove contamination from the container surface. Reagents that could cause the decontamination coating to leak, corrode, or otherwise fail will not be used within the unit.

### Primary Barrier Integrity in the ILAW Container Finishing Containment Building

The ILAW containment building will be designed to withstand loads from the movement of personnel, wastes, and handling equipment. The seismic design criteria found in DWP Operating Unit Group 10, Supplement 1 ensures that appropriate design loads, load combinations, and structural acceptance criteria are employed at the WTP.

### Certification of Design for the ILAW Container Finishing Containment Building

Prior to initial receipt of dangerous and mixed waste, certification by a qualified registered professional engineer that the ILAW containment building meets the design requirements of 40 CFR 264.1101(a) and (c) will be obtained.

The requirements of 40 CFR 264.1101(b) do not apply to this design because any dangerous waste containing free liquids will be managed on portable secondary containment that meets the requirements of WAC 173-303-630(7).

Operation of the ILAW Container Finishing Containment Building

Operational and maintenance controls and practices will be established to ensure containment of the waste within the ILAW containment building, as required by 40 CFR 264.1101(c)(1). Activities in the building will be remotely conducted.

Maintenance of the ILAW Container Finishing Containment Building

The epoxy decontamination coated concrete floor and walls of the of the containment building will be constructed and maintained in a manner that will be free of significant cracks, gaps, corrosion, or other deterioration. The coated concrete will be free of corrosion or other deterioration because it will be compatible with materials that will be managed in the containment building, which will include ILAW containers, containerized secondary waste, and failed equipment. Waste containers managed in the containment building will not be stacked.

Measures to Prevent Tracking Wastes from the ILAW Container Finishing Containment Building

The ILAW containment building is designed to sample, mechanically seal, and decontaminate the filled ILAW containers. Conducting these activities in a C3 zone prevents the spread of contaminated materials from the unit as air flow is managed in the LAW vitrification facility ventilation system. The containment building is under negative pressure. Air flow through this containment building goes to a C5 air system, which passes through HEPA filters before exiting the facility stack.

A vacuum cleanup system, located in the two inert fill rooms, is expected to be infrequently used to collect dust from the inert filling activities, and thereby minimize the potential for dust to be tracked from the unit. The dust will be disposed of as secondary waste.

Additionally, personnel access to the containment building, which is classified as a C3 contamination area, will be allowed only under limited circumstances, reducing the potential for contacting the waste and tracking it from the unit.

Procedures in the Event of Release or Potential for Release from the ILAW Container Finishing Containment Building

Conditions that could lead to a release from the ILAW containment building will be corrected on a schedule intended to preclude a release that could be hazardous to public health or the environment. In the unlikely event of a release of dangerous wastes from the containment building, actions required by 40 CFR 264.1101(c)(3)(i) through (iii) will be taken. Specific administrative and operating methods to satisfy this requirement will be developed prior to initial receipt of dangerous and mixed waste. The methods will be followed to repair conditions that could lead to a release.

Inspections of the ILAW Container Finishing Containment Building

An inspection program will be established to detect conditions that could lead to a release of wastes from the ILAW container finishing containment building. The inspection and monitoring schedule and methods that will be used to detect releases from the unit are included in DWP Operating Unit Group 10, Chapter 6.0.

### 4E.3.3 LAW Consumable Import/Export Containment Building (L-0119B)

The LAW vitrification facility consumable import/export containment building will be located in the west end of the LAW vitrification facility on the 3 ft elevation. Typical waste management activities performed in this containment building include decontamination, size reduction, and packaging of spent equipment.

Dry wipe down decontamination of components will be performed to allow contact handling. Waste streams generated within the consumable import/export containment building will be transferred into a consumable change-out box (CCB) equipped with an internal bagging capabilities, and then packaged into a box for disposal. Waste typically generated in the consumable import/export area are managed in large waste boxes.

### LAW Vitrification Facility Consumable Import/Export Containment Building Design

The LAW vitrification facility consumable import/export containment building will be designed as a completely enclosed area within the LAW vitrification facility. It is designed to prevent the release of dangerous constituents and their exposure to the outside environment. The design and construction of the LAW vitrification facility exterior will prevent water from running into the facility. The roof of the LAW vitrification facility will consist of metal roofing, roof insulation, and vapor barrier. Rainwater run-off will be collected by roof drains and drainage systems with overflow roof drains. The approximate dimensions of the unit are summarized in Table 4E-5.

### LAW Vitrification Facility Consumable Import/Export Containment Building Structure

The LAW vitrification facility consumable import/export containment building will be a concrete-walled structure fully enclosed within the LAW vitrification facility. Therefore, structural requirements for the containment building will be met by the design standards of the LAW vitrification facility. The design will ensure that the unit has sufficient structural strength to prevent collapse or failure. DWP Operating Unit Group 10, Supplement 1 provides documentation that the seismic requirements for the LAW vitrification facility meet or exceed the Uniform Building Code Seismic Design Requirements.

### LAW Vitrification Facility Consumable Import/Export Containment Building Materials

The LAW vitrification facility consumable import/export containment building will be constructed of steel-reinforced concrete. The interior floor and a portion of the walls of the unit will be coated with an epoxy coating to protect the concrete and facilitate decontamination.

### Use of Incompatible Materials in the LAW Vitrification Facility Consumable Import/Export Containment Building

An epoxy coating will be provided for the floor of this unit. The coating will be compatible with the wastes that will be managed. Activities in the unit will be limited to decontamination and packaging the waste components into drums or waste boxes. Treatment reagents that could cause the coating to leak, corrode, or otherwise fail will not be used within the unit.

### Primary Barrier Integrity in the LAW Vitrification Facility Consumable Import/Export Containment Building

The LAW vitrification facility consumable import/export containment building will be designed to withstand loads from the movement of personnel, wastes, and handling equipment. The seismic design criteria found in DWP Operating Unit Group 10, Supplement 1 ensures that appropriate design loads, load combinations, and structural acceptance criteria are employed at the WTP.

### Certification of Design for the LAW Vitrification Facility Consumable Import/Export Containment Building

Prior to receipt of dangerous and mixed waste, a certification by a qualified registered professional engineer that the LAW vitrification facility consumable import/export containment building meets the design requirements of 40 CFR 264.1101(a) and (c) will be obtained. The requirements of 40 CFR 264.1101(b) do not apply to this design because any dangerous waste containing free liquids will be managed on portable secondary containment that meets the requirements of WAC 173-303-630(7).

Operation of the LAW Vitrification Facility Consumable Import/Export Containment Building

Operational and maintenance controls and practices will be established and followed to ensure containment of the wastes within the LAW vitrification facility C3 containment building unit as required by 40 CFR 264.1101(c)(1).

Maintenance of the LAW Vitrification Facility Consumable Import/Export Containment Building

The epoxy coating of the unit will be constructed and maintained in a manner that will be free of significant cracks, gaps, corrosion, or other deterioration. The coating will remain free of corrosion or other deterioration because it is compatible with materials that will be managed in the containment building. The failed equipment that will be managed and packaged in the containment building unit will be compatible with the protective coating. Only decontamination chemicals that are compatible with the coating will be used.

Measures to Prevent Tracking Wastes from the LAW Vitrification Facility Consumable Import/ Export Containment Building

The LAW vitrification facility consumable import/export containment building will be designed to package failed equipment to prevent the spread of contaminated materials. Very little dust is expected to be generated in the unit.

The containment building will be classified as a C3 contamination area, which allows only limited access by personnel. Wastes leaving the unit will be enclosed within containers. If necessary, these containers will be decontaminated in the unit prior to release and transportation to a permitted treatment and disposal area.

Procedures in the Event of Release or Potential for Release from the LAW Vitrification Consumable Import/Export Containment Building

The design and operation of the unit makes it very unlikely that releases will occur. The design and operational measures will minimize the generation of dust and contain it within the unit. The ventilation system will also use negative air pressure to keep contamination from spreading to areas of lesser contamination.

Inspections will identify conditions that could lead to a release. Such conditions will be corrected on a schedule intended to preclude a release that could be hazardous to public health or the environment. In the unlikely event that a release of dangerous wastes from the containment building is detected, actions required by 40 CFR 264.1101(c)(3)(i) through (iii) will be taken. Specific administrative and operating methods that will be used to satisfy this requirement will be developed prior to initial receipt of dangerous and mixed waste. These methods will be followed to repair conditions that could lead to a release.

Inspections of the LAW Vitrification Facility Consumable Import/Export Containment Building

An inspection program will be established to detect conditions that could lead to a release of wastes from the LAW vitrification facility consumable import/export containment building. The inspection and monitoring schedule and methods that will be used to detect releases from the unit are included in DWP Operating Unit Group 10, Chapter 6.0.

### 4E.3.4 LAW C3 Workshop Containment Building (L-0226A)

The C3 workshop containment building will be located in the west side of the LAW vitrification facility at elevation 28 ft.

Typical waste management activities performed in this containment building include decontamination, size reduction, and packaging of spent equipment. Equipment will be transported to the unit contained in shielded containers, drums, or in waste boxes. In the workshop, the equipment will be decontaminated to enable hands-on maintenance.

Spent equipment and parts will be bagged and placed in standard waste containers or boxes for disposal. Size reduction may be performed to facilitate packaging. Other spent equipment will be packaged in drums or waste boxes.

### C3 Workshop Containment Building Design

The C3 workshop containment building will be a completely enclosed area within the LAW vitrification facility. It will be designed to prevent the release of dangerous waste and their exposure to the outside environment. The design and construction of the LAW vitrification facility exterior will prevent water from running into the facility. The roof of the LAW vitrification facility will consist of metal roofing, roof insulation, and vapor barrier. Rainwater run-off will be collected by roof drains and drainage systems with overflow roof drains. The approximate dimensions of the unit are summarized in Table 4E-5.

### C3 Workshop Containment Building Structure

The C3 workshop containment building will be fully enclosed within the LAW vitrification facility. Therefore, structural requirements for the containment building will be met by the design standards of the LAW vitrification facility. The design will ensure that the unit has sufficient structural strength to prevent collapse or failure. DWP Operating Unit Group 10, Supplement 1 provides documentation that the seismic requirements for the LAW vitrification facility meet or exceed the Uniform Building Code Seismic Design Requirements.

### C3 Workshop Containment Building Materials

The C3 workshop containment building will be constructed of a steel-reinforced epoxy coated concrete floor and plasterboard partition walls. The floor will be coated with an epoxy coating to protect the concrete and facilitate decontamination.

### Use of Incompatible Materials in the C3 Workshop Containment Building

Activities in the unit will be limited to decontamination, size reduction, and packaging the waste components into drums or waste boxes. Treatment reagents that could cause the epoxy coating to leak, corrode, or otherwise fail will not be used within the unit.

### Primary Barrier Integrity in the C3 Workshop Containment Building

The C3 workshop containment building is designed to withstand loads from the movement of personnel, wastes, and handling equipment. The seismic design criteria found in DWP Operating Unit Group 10, Supplement 1 ensures that appropriate design loads, load combinations, and structural acceptance criteria are employed at the WTP.

### Certification of Design for the C3 Workshop Containment Building

Prior to initial receipt of dangerous and mixed waste, a certification by a qualified registered professional engineer that the C3 workshop containment building meets the design requirements of 40 CFR 264.1101(a) and (c) will be obtained. The requirements of 40 CFR 264.1101(b) do not apply to this design because any dangerous waste containing free liquids will be managed on portable secondary containment that meets the requirements of WAC 173-303-630(7).

### Operation of the C3 Workshop Containment Building

Operational and maintenance controls and practices will be established and followed to ensure containment of the wastes within the C3 workshop containment building unit as required by 40 CFR 264.1101(c)(1).

Maintenance of the C3 Workshop Containment Building

The epoxy coated concrete will be constructed and maintained in a manner that will be free of significant cracks, gaps, corrosion, or other deterioration.

The concrete will remain free of corrosion or other deterioration because it is compatible with materials that will be managed in the containment building. The failed equipment that will be managed in the containment building unit will be compatible with the coated concrete. Only decontamination chemicals that are compatible with the concrete coating will be used.

Measures to Prevent Tracking Wastes from the C3 Workshop Containment Building

The C3 workshop containment building will be designed to isolate failed equipment from the accessible environment and to prevent the spread of contaminated materials. Very little dust is expected to be generated in the unit.

The containment building is classified as a C3 contamination area, which allows only limited access by personnel. Personnel access will be via a C2/C3 sub-change room. Equipment will enter and exit the workshop via a C2/C3 airlock. Repaired equipment leaving the unit will be decontaminated, when necessary, before being released for removal from the containment building. Wastes leaving the unit will be packaged in waste containers or waste boxes. If necessary, the containers will be decontaminated in the unit prior to transportation to a permitted treatment or disposal area.

Procedures in the Event of Release or Potential for Release from the C3 Workshop Containment Building

The design and operation of the unit makes it very unlikely that releases will occur. The design and operational measures will minimize the generation of dust and contain it within the unit. The ventilation system will also use negative air pressure to keep contamination from areas of lesser contamination. Offgas will be routed to the LAW offgas treatment system.

Inspections will identify conditions that could lead to a release. Such conditions will be corrected on a schedule intended to preclude a release that could be hazardous to public health or the environment. In the unlikely event that a release of dangerous wastes from the containment building is detected, actions required by 40 CFR 264.1101(c)(3)(i) through (iii) will be taken. Specific administrative and operating methods that will be used to satisfy this requirement will be developed prior to initial receipt of dangerous and mixed waste. These methods will be followed to repair conditions that could lead to a release.

Inspections of the C3 Workshop Containment Building

An inspection program will be established to detect conditions that could lead to a release of wastes from the C3 workshop containment building. The inspection and monitoring schedule and methods that will be used to detect releases from the unit are included in DWP Operating Unit Group 10, Chapter 6.0.

### 4E.3.5 LAW Pour Cave Containment Building (L-B009B, L-B011B, L-B011C, L-B013B, L-B013C, L-B015A)

The LAW pour cave containment building (rooms L-B009B, L-B011B, L-B011C, L-B013B, L-B013C, L-B015A) will be located in the LAW vitrification facility, elevation -21 ft. It will be used for managing ILAW containers as they are filled with glass from the LAW Melters (LAW-MLTR-00001/2). The filled ILAW containers will be allowed to cool with the lids off the container. Cooled ILAW containers will be transferred to the ILAW container finishing line containment building for lidding and preparation for export to a storage facility.

LAW Pour Cave Containment Building Design

The LAW pour cave containment building will be completely enclosed within the LAW vitrification facility, which will be designed to prevent the release and exposure of dangerous constituents to the

outside environment. The design and construction of the LAW vitrification facility exterior will prevent precipitation from entering into the facility. The roof of the LAW vitrification facility will consist of metal roofing, roof insulation, and a vapor barrier. Roof drains and drainage system with overflow drains will collect run-off. The approximate dimensions of the unit are summarized in Table 4E-5.

### LAW Pour Cave Containment Building Structure

Because the LAW pour cave containment building will be a concrete-walled structure fully enclosed within the LAW vitrification facility, its structural requirements will be met by the design standards of the LAW vitrification facility. The design will ensure that the unit has sufficient structural strength to prevent collapse or failure. DWP Operating Unit Group 10, Supplement 1 provides documentation that the seismic requirements for the LAW vitrification facility meet or exceed the Uniform Building Code Seismic Design Requirements.

### LAW Pour Cave Containment Building Materials

The LAW pour cave containment building will be constructed of steel-reinforced concrete that is provided with an insulated stainless steel liner to protect the concrete from thermal damage and support decontamination.

### Use of Incompatible Materials for the LAW Pour Cave Containment Building

The waste to be managed includes vitrified waste glass within the stainless steel containers and insulated stainless cladding. No glass waste is expected to be present on the exterior of the containers, due to the design of the melter pour stations. The interior is the only portion of the container that will be exposed to the glass waste. Reagents that could cause corrosion or other failure will not be used within the unit.

### Primary Barrier Integrity in the LAW Pour Cave Containment Building

The LAW pour cave containment building will be designed to withstand loads from the movement of personnel, wastes, and handling equipment. The seismic design criteria found in *RPP-WTP Compliance with Uniform Building Code Seismic Design Requirements*, DWP Operating Unit Group 10, Supplement 1 ensures that appropriate design loads, load combinations, and structural acceptance criteria are employed at the WTP.

### Certification of Design for the LAW Pour Cave Containment Building

Prior to initial receipt of dangerous and mixed waste, certification by a qualified registered professional engineer that the LAW pour cave containment building meets the design requirements of 40 CFR 264.1101(a) and (c) will be obtained. The requirements of 40 CFR 264.1101(b) do not apply to this design because any dangerous waste with free liquids will be managed on portable secondary containment that meets the requirements of WAC 173-303-630(7).

### Operation of the LAW Pour Cave Containment Building

Operational and maintenance controls and practices will be established to ensure containment of the waste within the LAW pour cave containment building, as required by 40 CFR 264.1101(c)(1). Activities in the building will be remotely conducted during normal operation when ILAW containers are present.

### Maintenance of the LAW Pour Cave Containment Building

The insulated stainless steel clad concrete will be free of corrosion or other deterioration because it will be compatible with materials that will be managed in the containment building, which will include containerized glass waste and equipment.

### Measures to Prevent Tracking Wastes from the LAW Pour Cave Containment Building

The LAW pour cave containment building is designed to manage the filling and movement of ILAW containers. Conducting these activities in a C5 zone prevents the spread of contaminated materials from

the unit as airflow is managed in the LAW vitrification facility ventilation system. The containment building is under negative pressure. Airflow through this containment building goes to a C5 air system, which passes through HEPA filters before exiting the facility stack. Personnel access will be restricted during normal operation since it is classified as a C5 contamination area. The containment building may be reclassified as a C3 area for equipment maintenance.

Procedures in the Event of Release or Potential for Release from the LAW Pour Cave Containment Building

Conditions that could lead to a release from the LAW pour cave containment building will be corrected on a schedule intended to preclude a release that could be hazardous to public health or the environment. In the unlikely event of a release of dangerous wastes from the containment building, actions required by 40 CFR 264.1101(c)(3)(i) through (iii) will be taken. Specific administrative and operating methods to satisfy this requirement will be developed prior to initial receipt of dangerous and mixed waste. The methods will be developed to repair conditions that could lead to a release.

Inspections of the LAW Pour Cave Containment Building

An inspection program will be established to detect conditions that could lead to a release of wastes from the LAW pour cave containment building. The inspection and monitoring schedule and methods that will be used to detect releases from the unit are included in DWP Operating Unit Group 10, Chapter 6.0.

### 4E.3.6 LAW Container Buffer Storage Containment Building (L-B025C, L-B025D)

The LAW container buffer storage containment building (rooms L-B025C, L-B025D) will be located in the LAW vitrification facility, elevation -21 ft. It will be used for managing ILAW containers after they are filled with glass from the LAW Melters (LAW-MLTR-00001/2). The filled ILAW containers will be allowed to cool with the lids off the container. Cooled ILAW containers will be transferred to the ILAW container finishing line containment building for lidding and preparation for export to a storage or disposal facility.

LAW Container Buffer Storage Containment Building Design

The LAW container buffer storage containment building will be completely enclosed within the LAW vitrification facility, which will be designed to prevent the release and exposure of dangerous constituents to the outside environment. The design and construction of the LAW vitrification facility exterior will prevent precipitation from entering into the facility. The roof of the LAW vitrification facility will consist of metal roofing, roof insulation, and a vapor barrier. Roof drains and drainage system with overflow drains will collect run-off. The approximate dimensions of the unit are summarized in Table 4E-5.

LAW Container Buffer Storage Containment Building Structure

Because the LAW container buffer storage containment building will be a concrete-walled structure fully enclosed within the LAW vitrification facility, its structural requirements will be met by the design standards of the LAW vitrification facility. The design will ensure that the unit has sufficient structural strength to prevent collapse or failure. DWP Operating Unit Group 10, Supplement 1 provides documentation that the seismic requirements for the LAW vitrification facility meet or exceed the Uniform Building Code Seismic Design Requirements.

LAW Container Buffer Storage Containment Building Materials

The LAW container buffer storage containment building will be constructed of steel-reinforced concrete provided with an epoxy coating to protect the concrete and facilitate decontamination.

### Use of Incompatible Materials for the LAW Container Buffer Storage Containment Building

The waste to be managed includes vitrified waste glass within the stainless steel containers. No glass waste is expected to be present on the exterior of the containers. The interior is the only portion of the container that will be exposed to the glass waste. Reagents that could cause corrosion or other failure of the epoxy coating will not be used within the unit.

### Primary Barrier Integrity in the LAW Container Buffer Storage Containment Building

The LAW container buffer storage containment building will be designed to withstand loads from the movement of personnel, wastes, and handling equipment. The seismic design criteria found in *RPP-WTP Compliance with Uniform Building Code Seismic Design Requirements*, DWP Operating Unit Group 10, Supplement 1 ensures that appropriate design loads, load combinations, and structural acceptance criteria are employed at the WTP.

### Certification of Design for the LAW Container Buffer Storage Containment Building

Prior to initial receipt of dangerous and mixed waste, certification by a qualified registered professional engineer that the LAW container buffer storage containment building meets the design requirements of 40 CFR 264.1101(a) and (c) will be obtained. The requirements of 40 CFR 264.1101(b) do not apply to this design because any dangerous waste containing free liquids will be managed on portable secondary containment that meets the requirements of WAC 173-303-630(7).

### Operation of the LAW Container Buffer Storage Containment Building

Operational and maintenance controls and practices will be established to ensure containment of the waste within the LAW container buffer storage containment building, as required by 40 CFR 264.1101(c)(1). Activities in the building will be remotely conducted during normal operation when ILAW containers are present.

### Maintenance of the LAW Container Buffer Storage Containment Building

The epoxy coated concrete will be free of corrosion or other deterioration because it will be compatible with materials that will be managed in the containment building, which will include containerized glass waste and equipment. Wastes containers managed in the containment building will not be stacked.

### Measures to Prevent Tracking Wastes from the LAW Container Buffer Storage Containment Building

The LAW container buffer storage containment building is designed to manage the movement and storage of ILAW containers. Conducting these activities in a C5 zone prevents the spread of contaminated materials from the unit as airflow is managed in the LAW vitrification facility ventilation system. The containment building is under negative pressure. Airflow through this containment building goes to a C5 air system, which passes through HEPA filters before exiting the facility stack. Personnel access will be restricted during normal operation since it is classified as a C5 contamination area. The containment building may be reclassified as a C3 area for equipment maintenance.

### Procedures in the Event of Release or Potential for Release from the LAW Container Buffer Storage Containment Building

Conditions that could lead to a release from the LAW container buffer storage containment building will be corrected on a schedule intended to preclude a release that could be hazardous to public health or the environment. In the unlikely event of a release of dangerous wastes from the containment building, actions required by 40 CFR 264.1101(c)(3)(i) through (iii) will be taken. Specific administrative and operating methods to satisfy this requirement will be developed prior to initial receipt of dangerous and mixed waste. The methods will be developed to repair conditions that could lead to a release.

Inspections of the LAW Container Buffer Storage Containment Building

An inspection program will be established to detect conditions that could lead to a release of wastes from the LAW container buffer storage containment building. The inspection and monitoring schedule and methods that will be used to detect releases from the unit are included in DWP Operating Unit Group 10, Chapter 6.0.

## 4E.4 Air Emission Control

### 4E.4.1 LAW Vitrification Facility Ventilation

The LAW vitrification facility will be divided into four numbered zones (the C4 designation is not used) listed and defined below, with the higher number indicating greater radiological hazard potential and therefore a requirement for a greater degree of control or restriction. The zoning of the ventilation system will be based on the classifications assigned to building areas for potential radiological contamination. Zones classified as C5 are potentially the most contaminated and include the pour caves, buffer storage area, and process cells. Zones classified as C1 are uncontaminated areas.

Containment will be achieved by maintaining C5 areas at the greatest negative pressure, with airflows cascaded through engineered routes from C2 areas to C3 areas and on to the C5 areas. The cascade system, in which air passes through more than one area, will reduce the number of separate ventilation streams and hence the amount of air requiring treatment. Adherence to this concept in the design and operation of the LAW vitrification facility will ensure that the ventilation air does not become a significant source of exposure to operators, and that the air emissions do not endanger human health or the environment.

An exhaust air radiation monitoring system, consisting of sensors to monitor radiation in the exhaust air stream, or a representative sampling system is provided in the discharge header downstream of the exhaust fans. A monitoring system would consist of probe assemblies, vacuum pumps, a stack flow sensor, temperature sensor, and radiation sensors. A temperature transmitter is also provided in the discharge header downstream of the exhaust fans for continuous monitoring of exhaust air temperature.

C1 Ventilation (C1V) System

C1 areas are normally occupied and are expected to remain free of contamination. C1 areas will be operated slightly pressurized relative to atmosphere and other adjacent areas. The C1V system consists of AHUs, change rooms exhaust fan, ductwork, and accessories. Areas served by this system include:

- Office spaces
- Control Room
- Incident Command Post (ICP) [During DFLAW operations]
- Lunch Room
- Restrooms
- Change Rooms
- Truck Bays
- LAW Switchgear Building

C2 Ventilation (C2V) System

C2 areas will typically consist of non-process operating areas, equipment rooms, stores, access corridors, and plant rooms adjacent to areas with higher contamination potential. The C2V is served by dedicated air handling units and exhaust fans. Ventilation air supplied to C2 areas will be exhausted by the C2 exhaust system and cascaded into adjacent C3 areas. The sum of the volumetric flow rates exhausted by the C2 exhaust system and cascaded into adjacent C3 areas will be greater than the volumetric flow rate

supplied to C2 areas. This will cause the C2 areas to maintain a nominal negative pressure relative to atmosphere. C2 exhaust will pass through one stage of HEPA filters and be discharged to the atmosphere by the exhaust fans. Supply and exhaust fans are provided with variable frequency drives.

C3 Ventilation (C3V) System

C3 areas are normally unoccupied, but allow operator access, for instance during maintenance. C3 areas will typically consist of filter plant rooms, workshops, maintenance areas, and monitoring areas. Air will generally be drawn from C2 areas and, wherever possible, cascaded through the C3 areas into C5 areas, or alternatively exhausted from the C3 areas by the C3 exhaust system. In general, air cascaded into the C3 areas will be from adjacent C2/C3 subchange rooms. C3 exhaust will pass through one stage of HEPA filters and be discharged to the atmosphere by the exhaust fans. C3 exhaust fans are provided with variable frequency drives.

C5 Ventilation (C5V) System

Where there is in-bleed air from the C3 system to the C5 system, fan cascade trip interlocks protect the system from backflow.

The C5 areas in the LAW vitrification facility will be composed of the following:

- Pour caves
- Container transfer tunnel
- Buffer storage area
- C3/ C5 drains/ sump collection vessel room
- Process cells
- Finishing line

Air will be cascaded into the C5 areas and exhausted by the C5 exhaust system. Engineered ventilation pipe entries (air in-bleeds) through the C5 confinement boundary will be protected by backflow isolation dampers. C5 exhaust will pass through two stages of HEPA filters and be discharged to the atmosphere by the exhaust fans. C5 exhaust fans are provided with variable frequency drives.

### 4E.4.2 LAW Melter Offgas System

The LAW Melter Offgas System consists of the following process systems:

- LAW Primary Offgas Process (LOP) System
- LAW Secondary Offgas/Vessel Vent Process (LVP) System

Process flow diagrams of the LOP System are provided in DWP Operating Unit Group 10, Appendix 9.1. The LOP tank system consists of the following tanks and miscellaneous treatment unit sub-systems and their associated ancillary equipment:

Tank System

- LAW Melter SBS Condensate Vessels (LOP-VSL-00001/2)
- Pumps
- Eductor (LOP-EDUC-00001)

Miscellaneous Treatment Unit Sub-Systems

- Melter 1 and Melter 2 Primary and Standby Film Coolers (LOP-FCLR-00001/2/3/4), one set for each melter
- Melter 1 and Melter 2 Submerged Bed Scrubbers (SBS)(LOP-SCB-00001/2)
- Melter 1 and Melter 2 Wet Electrostatic Precipitators (WESP) (LOP-WESP-00001/2)

Process flow diagram of the LVP System are provided in DWP Operating Unit Group 10, Appendix 9.1. The LVP tank system consists of the following tanks and miscellaneous treatment unit sub-systems and their associated ancillary equipment.

Tank System

- LAW Caustic Collection Tank (LVP-TK-00001)

Miscellaneous Treatment Unit Sub-Systems

- Melter Offgas HEPA Preheaters(LVP-HTR-00001A/1B)
- Melter Offgas HEPA Filters (LVP-HEPA-00001A/1B/2A/2B/3A)
- Offgas Mercury Adsorbers (LVP-ADBR-00001A/1B)
- Thermal Catalytic Oxidizer Skid (LVP-SKID-00002)
- Selective Catalytic Oxidizer (SCO) (LVP-SCO-00001)
- NOx Selective Catalytic Reduction Unit (SCR) (LVP-SCR-00001)
- Catalytic Oxidizer Heat Recovery Unit (LVP-HX-00001)
- Catalytic Oxidizer Electric Heater (LVP-HTR-000002)

Melter offgas is generated from the vitrification of LAW feed in the two joule-heated ceramic melters and the vessel ventilation system. The rate of generation of gases in the melter is dynamic. The melters generate offgas resulting from decomposition, oxidation, and vaporization of feed material. Constituents of the offgas include:

- Nitrogen oxides from decomposition of metal nitrates in the melter feed
- Chloride, fluoride, and sulfur as oxides, acid gases, and salts
- Particulates and aerosols
- Entrained feed material and glass
- Mercury

In addition, the LAW Melters generate small quantities of other volatile compounds including iodine-129, carbon-14, tritium, and volatile organic compounds. Carbon-14 and tritium are in the form of carbon dioxide and water, respectively.

The purpose of the LAW Melter offgas system is to cool and treat the melter offgas and vessel ventilation offgas to a level that is protective of human health and the environment. The offgas system also provides a pressure confinement boundary that will control melter pressure and prevent vapor release to the cell. The design of the melter offgas system accommodates changes in offgas flow from individual melters without causing either melter to pressurize and without allowing variations in the flow from one melter to impact the other melter.

Separate systems are provided for the initial treatment of offgas from each melter. This is considered the primary offgas treatment system. This primary offgas system is designed to handle intermittent surges of seven times the normal steam generation rate and three times the normal non-condensable gas generation rate from the melter feed without causing interruption of melter operations. The primary system consists of Film Coolers (LOP-FCLR-00001/3), Submerged Bed Scrubbers (LOP-SCB-00001/2), and a Melter Wet Electrostatic Precipitator (LOP-WESP-00001/2). This system cools the offgas and removes particulates.

There is a second offgas line from the Melter to the Submerged Bed Scrubbers (LOP-SCB-00001/2) consisting of a Standby Film Cooler (LOP-FCLR-00002/4) and a butterfly valve as the isolation device. The melter is operated under negative pressure. In the event that the primary offgas line plugs or the melter surges beyond design basis, the butterfly valve opens allowing offgas flow to the submerged bed

scrubber through the second offgas line, thereby preventing melter pressurization. The line is also designed to handle surges up to seven times the normal steam generation rate and three times the non-condensable gas generation rate from melter feed without causing interruption in melter operations. In the event that the melter surge exceeds the pressure relief set point, the pressure relief device opens venting the offgas to the process cell. The pressure relief device closes as the melter pressure approaches the desired set point. Offgas from the wet process cell is drawn through C5V HEPA Filters to remove particulates before discharged to the atmosphere.

The vessel ventilation system offgas consists primarily of air, water vapor, and minor amounts of aerosols generated by the agitation or movement of vessel contents. The vessel ventilation system header joins the primary offgas system after the Wet Electrostatic Precipitators (LOP-WESP-00001/2), and the combined offgas is routed to the secondary offgas treatment system.

The secondary offgas system (from HEPA preheater to final discharge) is designed to handle maximum sustained flowrate from the two melters assuming both melters are operating. The system is also capable of operating effectively if only one melter is running. The secondary offgas system consists of Melter Offgas Preheater (LVP-HTR-00001A/1B) with Melter Offgas HEPA Filter trains (LVP-HEPA-00001A/1 2A/3A and 00001B/2B), and the Melter Offgas Exhausters (LVP-EXHR-00001A/B/C). The balance of the secondary offgas system includes the Offgas Mercury Adsorbers (LVP-ADBR-00001A/B), LVP-SKID-00002 made up of a Thermal Catalytic Oxidizer (LVP-SCO-00001)/Selective CatalyticReducer (LVP-SCR-00001), the Catalytic Oxidizer Heat Recovery Unit (plate and frame heat exchanger) (LVP-HX-00001), Catalytic Oxidizer Electric Heater (LVP-HTR-00002), the catalyst for volatile organic compound oxidation and the catalyst for nitrogen oxides reduction; and a Melter Offgas Caustic Scrubber (LVP-SCB-00001).

The melter offgas exhausters will be located downstream of the LVP Caustic Scrubber (LVP-SCB-00001) and maintain negative pressure across the LVP primary and secondary offgas equipment upstream of the exhausters. The following sections provide descriptions of major melter offgas treatment components.

#### 4E.4.2.1 LAW Primary Offgas Process (LOP) System

Process flow diagram of the LAW Primary Offgas Process (LOP) System are provided in DWP Operating Unit Group 10, Appendix 9.1. The purpose of the LOP tank system and miscellaneous treatment unit sub-systems is to cool the offgas and remove aerosols generated by each of the two LAW melters. The primary components consist of a film cooler, submerged bed scrubber, and a wet electrostatic precipitator.

<u>Melter Film Coolers (LOP-FCLR-00001/2/3/4)</u>

The primary function of the Film Cooler miscellaneous treatment unit sub-system is to cool the offgas and entrained molten glass droplets below the glass sticking temperature to minimize glass deposition on the offgas piping walls. The offgas exits the melter and is mixed with steam or steam/air mixture in the offgas Film Cooler. The Film Cooler is a double-walled pipe designed to introduce air/steam axially along the walls of the offgas pipe through a series of holes or slots in the inner wall. Each melter has a primary and a standby Film Cooler.

<u>Melter Submerged Bed Scrubber (LOP-SCB-00001/2)</u>

Each LAW Melter has a dedicated Submerged Bed Scrubber miscellaneous treatment unit sub-system. After each primary Film Cooler (LOP-FCLR-00001/3), the offgas enters the Submerged Bed Scrubber column for further cooling and solids removal. The Submerged Bed Scrubber is a passive device designed for aqueous scrubbing of entrained particulates from melter offgas, cooling and condensation of melter vapor emissions, and interim storage of condensed fluids. It will also quench the offgas to a desired discharge temperature through the use of cooling coils/jacket. The offgas leaves the Submerged Bed Scrubber in approximate thermal equilibrium with the scrubbing solution.

The Submerged Bed Scrubbers (LOP-SCB-00001/2) have two offgas inlets, one for the normal operations line and one for the standby line. Standby Film Coolers (LOP-FCLR-00002/4) can be routed to either Submerged Bed Scrubber. Each Standby Film cooler is normally routed to its respective submerged bed scrubber; however, each film cooler can be routed to the alternate submerged bed scrubber. The offgas enters the Submerged Bed Scrubber through the appropriate inlet pipe that runs down through the center of the bed to the packing support plate. The bed-retaining walls extend below the support plate creating a lower skirt to allow the formation of a gas bubble underneath the packing. The entire bed is suspended off the floor of the Submerged Bed Scrubber to allow the scrubbing solution to circulate freely through the bed. After formation of the gas bubbles beneath the packing, the injected offgas bubbles up through the packed bed. The rising gas bubbles also cause the scrubbing liquid to circulate up through the packed bed, resulting in a general recirculation of the scrubbing solution. The packing breaks larger bubbles into smaller ones to increase the gas to water contacting surface, thereby increasing particulate removal and heat transfer efficiencies. The warmed scrubbing solution then flows downward outside of the packed bed past the cooling coils/jacket.

To maintain a constant liquid level within the Submerged Bed Scrubbers (LOP-SCB-00001/2), overflow lines will be installed that allow for the continuous discharge of offgas condensate and some scrubbed particulates to the Melter SBS Condensate Vessels (LOP-VSL-00001/2), located next to the Submerged Bed Scrubber. The Melter SBS Condensate Vessels are equipped with a cooling jacket. The rate of condensate discharge is determined by how much the offgas temperature is lowered below its dew point. The condensate and some collected particulates overflow into the Melter SBS Condensate Vessels.

To minimize the buildup of the solids in the bottom of the Submerged Bed Scrubber, condensate from the Melter SBS Condensate Vessels (LOP-VSL-00001/2) will be re-circulated back to the Submerged Bed Scrubber and injected through multiple lances to agitate and suspend solids on the submerged bed scrubber floor. The collected solids will then be pumped directly off the Submerged Bed Scrubber vessel floor to the Melter SBS Condensate Collection Vessel (RLD-VSL-00005). This purging and recycling process occurs simultaneously. Submerged Bed Scrubber condensate from the SBS Condensate Collection Vessels (LOP-VSL-00001/2) ultimately flows to the TLP system. Venting of the Melter SBS Condensate Vessels is via the Submerged Bed Scrubber into the main offgas discharge pipe.

The scrubbed offgas discharges through the top of the Submerged Bed Scrubbers (LOP-SCB-00001/2) and is routed to the Melter Wet Electrostatic Precipitators (one per melter) (LOP-WESP-00001/2) for further particulate removal.

In addition to the instrumentation, alarms, controls, and interlocks addressed in Chapter 4E, the following will be provided for the Submerged Bed Scrubber to indicate or prevent the following conditions:

- High scrubber liquid temperature
- Low and High scrubber liquid level
- High condensate vessel liquid level
- Loss of chilled water supply
- Differential pressure across the unit

Melter Wet Electrostatic Precipitators (LOP-WESP-00001/2)

The Submerged Bed Scrubber (LOP-SCB-00001/2) discharge is routed to the Melter Wet Electrostatic Precipitator miscellaneous treatment unit sub-system for removal of aerosols down to and including submicron size. Each melter system has a dedicated Melter Wet Electrostatic Precipitator (LOP-WESP-00001/2). The offgas enters the unit and passes through a distribution plate. The evenly distributed saturated gas then flows up through tubes which act as positive electrodes. Each of the tubes has a single negatively charged electrode, which runs down the center of the tube. A high voltage, direct current transformer supplies power to the electrodes. A strong electric field is generated along the

electrodes giving a negative charge to the aerosols passing through the tubes. The negatively charged particles move towards the positively charged tube walls for collection. Collected particles are continuously washed from the tube walls along with collected mists. The final condensate continuously drains to the dished bottom area of the Melter Wet Electrostatic Precipitators' (LOP-WESP-00001/2). A water spray may be used periodically to facilitate the washing of collected aerosols from the tubes. The tube drain and wash solution are routed to the C3/C5 Drains/Sump Collection Vessel (RLD-VSL-00004).

In addition to the instrumentation, alarms, controls, and interlocks addressed in Chapter 4E, a standby offgas line and a maintenance bypass line will be provided for the Melter Wet Electrostatic Precipitators. The lines indicate or prevent the following conditions:

- Loss of electrical power to the unit
- High differential pressure across the unit
- Accumulation of liquid
- Loss of process water supply

Standby Offgas Line

The standby offgas line consists of an offgas pipe from the melter to a Submerged Bed Scrubber (LOP-SCB-00001/2), a Standby Film Cooler (LOP-FCLR-00002/4), and a butterfly valve isolation device.

During an off-normal melter surge or if the primary offgas pipe becomes plugged, the butterfly valve will open rapidly, and provide an alternative path for the melter offgas to flow to the Submerged Bed Scrubbers (LOP-SCB-00001/2). With this alternative routing, pressure control on the melter plenum can be maintained. This standby offgas pipe will extend to the bottom of the Submerged Bed Scrubber packed bed, identical to the main offgas line. It is the same size as the main offgas line, thus providing a doubling of flow cross-section for melter-generated gases.

Maintenance Bypass Line

The LAW Melters are also equipped with a maintenance bypass line, allowing offgases from one melter to be routed to the other's Submerged Bed Scrubber for cooling. The gas will be processed through both a primary and secondary offgas treatment system in the same manner as the normal path. The purpose of this line is to provide melter ventilation during idling conditions in the unlikely event that a Submerged Bed Scrubber (LOP-SCB-00001/2) or Melter Wet Electrostatic Precipitator (LOP-WESP-00001/2) requires maintenance. Prior to initiating use of the maintenance bypass line, waste feed will be secured, and the melters placed into an idle condition. Waste feed to melters will not occur when the maintenance bypass line is in use.

Idling emissions from the melter are mainly heated air at a lower gas volume than expected during slurry feeding. The gas will be processed through secondary offgas treatment system that includes HEPA filtration, thermal catalytic oxidation, and selective catalytic reduction.

#### 4E.4.2.2 LAW Secondary Offgas/Vessel Vent Process (LVP) System

Process flow diagram of the LAW Secondary Offgas/Vessel Vent Process (LVP) System are provided in DWP Operating Unit Group 10, Appendix 9.1. The LVP system prevents migration of waste contaminants into the process cells and operating areas. It does this by maintaining the various LAW process vessels under a slight vacuum relative to the cell. The composition of the vessel ventilation air is expected to be primarily ambient air with slight mixed waste particulate contamination.

The vessel ventilation air is combined with the melter offgas prior to entering the secondary offgas system HEPA filter electric preheaters. The combined air streams are treated together in the remaining sections of the secondary offgas treatment systems. A pressure control valve is used to regulate the pressure between the vessel ventilation offgas system and the melter offgas system.

The melter offgas stream that is treated through the primary offgas system is combined with the vessel ventilation offgas stream and treated through the LVP tanks and miscellaneous treatment sub-systems. The secondary offgas system removes the remaining particulate, mercury and miscellaneous acid gases, gaseous nitrogen oxide compounds, carbon monoxide, and volatile organic compounds.

Descriptions of the tanks and miscellaneous treatment sub-systems comprising the LVP are provided below:

### Melter Offgas HEPA Filters, HEPA Preheaters, and Exhausters

The purpose of the miscellaneous treatment unit sub-systems is to provide a final protection against dispersion of particulate and to protect the downstream equipment from particulate contamination. The combined offgas stream is first passed through the LAW Melter Offgas HEPA Preheaters (LVP-HTR-00001A/1B). Preheating increases the gas temperature sufficiently above its dew point to avoid condensation in the melter offgas HEPA filters. The offgas then passes through radial flow HEPA Filters (LVP-HEPA-00001A/2A/3A or 00001B/2B). The system is composed of two parallel trains of two filter banks in series.

The offgas passes through one train while the other remains available as an installed backup. Motive force for the ventilation is provided by the Melter Offgas Exhausters (LVP-EXHR-00001A/B/C). The melter offgas exhausters will be located downstream of the LVP Caustic Scrubber (LVP-SCB-00001) and maintain negative pressure across the LVP primary and secondary offgas equipment upstream of the exhausters.

Instrumentation, alarms, controls, and interlocks will be provided for the LVP system to indicate or prevent the following conditions:

- High or low differential pressure across a HEPA filter alarms.
- Loss of electric heater element.

Additional information to the instrumentation, alarms, controls, and interlocks associated with a bypass of the LVP system addressed in Chapter 4E are described in the *LAW Vitrification Offgas Bypass Analysis*, 24590-LAW-PER-PR-03-001.

### Offgas Mercury Adsorber (LVP-ADBR-0001A/B)

The Offgas Mercury Adsorbers (LVP-ADBR-00001A/B) make up LVP-SKID-00001 and are the miscellaneous treatment sub-system that removes volatile mercury, iodine, and some acid gases from the offgas. The offgas flows through two internal activated carbon beds normally operated in series. When breakthrough gaseous mercury is detected in the leading activated carbon bed, the carbon is loaded. In response, the offgas flow is manually changed to make the trailing bed the leading bed. Only one activated carbon bed is used when the spent activated carbon media is removed and replaced. After replacement, the flow is changed to make the fresh activated carbon bed the trailing bed.

The activated carbon is batch loaded into the adsorber by gravity. The spent activated carbon media is batch transferred by gravity into waste containers. The spent activated carbon media is managed as secondary waste.

Instrumentation, alarms, controls, and interlocks will be provided for the Offgas Mercury Adsorbers (LVP-ADBR-00001A/B) to indicate or prevent the following conditions:

- Mercury breakthrough in the leading carbon bed, signaling to switch the trailing carbon bed.
- With the detection of high carbon monoxide/carbon dioxide concentrations, the inlet and outlet valves are closed, isolating the carbon media and bypassing the carbon beds from the offgas stream. This limits the available oxygen to a carbon bed fire and is the primary fire suppression control.

- A water suppression system is available in the event of a carbon bed fire. Alarms notify an operator allowing the connection of the water fire suppression system and manual activation of the suppression system if needed.

Thermal Catalytic Oxidizer (TCO) (LVP-SCO-00001) and NOx Selective Catalytic Reduction Unit (SCR) (LVP-SCR-00001)

The offgas passes through the catalytic oxidizer/reducer skid (LVP-SKID-00002), housing a heat recovery unit (LVP-HX-00001), an electric heater (LVP-HTR-00002), Volatile Organic Compound (VOC) catalyst (LVP-SCO-00001), and SCR catalyst (LVP-SCR-00001) miscellaneous treatment unit sub-systems to remove volatile organic compounds, carbon monoxide, nitrogen oxide compounds in the offgas stream.

The heat recovery exchange first raises the offgas temperature using the hot offgas from the catalyst beds. The electric heater is used to supplement the heat recovery exchange primarily during start-up and when operating with low $NO_x$ concentrations. The heated offgas is passed through the VOC catalyst to oxidize VOCs and carbon monoxide to carbon dioxide and water vapor. The offgas is then injected with a mixture of ammonia vapor and C3 air from an ammonia/air dilution skid. Following ammonia injection, the offgas is passed through the SCR catalyst to reduce $NO_x$ to nitrogen and water vapor.

The reduction reaction is exothermic, significantly increasing the offgas temperature. The outgoing hot offgas is cooled down in the heat exchanger and concurrently serves as the heating media for the incoming offgas. The cooled offgas stream is then directed to the Caustic Scrubber for acid gas removal and final cooling.

Instrumentation, alarms, controls, and interlocks will be provided for the Thermal Catalytic Oxidizer / Selective Catalytic Reducers to indicate or prevent the following conditions:

- High differential pressure across each catalyst bed.
- Loss of ammonia gas supply to the nitrogen oxides selective catalytic reduction unit.
- Failure of the electric heater.
- Ammonia analyzer to indicate ammonia slip in the outlet.
- Low offgas temperature entering the unit.
- High temperature differential across the unit.
- High nitrogen oxide concentration in the unit outlet stream.
- High volatile organic compound concentration in the unit outlet stream.

Offgas Caustic Scrubber (LVP-SCB-00001)

The LAW Melters' offgas Caustic Scrubber miscellaneous treatment unit sub-system further treats the offgas by removing iodine and acid gases and providing final offgas cooling. The offgas stream enters the bottom of the scrubber and flows upward through a packed bed. Contaminants in the offgas stream are absorbed into the liquid stream through interaction of the gas, liquid, and packing media. To neutralize the collected acid gases, a sodium hydroxide solution is added periodically to the LAW Caustic Collection Tank (LVP-TK-00001). The clean offgas is then discharged through an internal mist eliminator to prevent droplet carryover. The scrubbing liquid flows downward through the packing bed and drains into the LAW Caustic Collection Tank (LVP-TK-00001). The contents of this tank are periodically transferred to the PTF or the EMF. After passing through the Caustic Scrubber (LVP-SCB-00001) and the Melter Offgas Exhausters (LVP-EXHR-00001A/B/C), the offgas is released to the environment via a flue in the plant stack.

In addition to the instrumentation, alarms, controls, and interlocks addressed in Chapter 4E, the following will be provided for the Caustic Scrubber to indicate or prevent the following conditions:

- Loss of recirculation pump
- Loss of caustic supply
- Loss of process water supply
- High differential pressure across the column
- Low scrubbing liquid level
- High scrubbing liquid level
- Loss of transfer pump
- Low pH
- High specific gravity (density)

This page intentionally left blank.

1

| Table 4E-1 LAW Vitrification Facility Tank Systems | | | | | | |
|---|---|---|---|---|---|---|
| **No.** | **System** | **Vessel Number/Location** | **Description** | **Material** | **Total Volume (US Gallons)** | **Approximate Dimensions (Inside Diameter) × Height or Length in feet and inches (tangent line/tangent line)** |
| 1 | LCP | LCP-VSL-00001<br>L-0123 | LAW Melter 1 Concentrate Receipt Vessel | Stainless Steel | 18,130 | 14’-0” 12’-9” |
| 2 | LCP | LCP-VSL-00002<br>L-0124 | LAW Melter 2 Concentrate Receipt Vessel | Stainless Steel | 18,130 | 14’-0” 12’-9” |
| 3 | LFP | LFP-VSL-00001<br>L-0123 | Melter 1 Feed Preparation Vessel | Stainless Steel | 9,123 | 11’-0” 10’-6” |
| 4 | LFP | LFP-VSL-00002<br>L-0123 | Melter 1 Feed Vessel | Stainless Steel | 9,123 | 11’-0” 10’-6” |
| 5 | LFP | LFP-VSL-00003<br>L-0124 | Melter 2 Feed Preparation Vessel | Stainless Steel | 9,123 | 11’-0” 10’-6” |
| 6 | LFP | LFP-VSL-00004<br>L-0124 | Melter 2 Feed Vessel | Stainless Steel | 9,123 | 11’-0” 10’-6” |
| 7 | LVP | LVP-TK-00001<br>L-0218 | LAW Caustic Collection Tank | Stainless Steel | 14,232 | 13’-0’ (od) 14’-4” |
| 8 | LOP | LOP-VSL-00001<br>L-0123 | LAW Melter 1 SBS Condensate Vessel | Hastelloy | 9,056 | 12’-0” 8’-2” |
| 9 | LOP | LOP-VSL-00002<br>L-0124 | LAW Melter 2 SBS Condensate Vessel | Hastelloy | 9,056 | 12’-0” 8’-2” |
| 10 | RLD | RLD-VSL-00003<br>L-0126 | Plant Wash Vessel | 6% Mo/Stainless Steel | 25,780 | 16’-0” 15’-5” |

| Table 4E-1 LAW Vitrification Facility Tank Systems | | | | | | |
|---|---|---|---|---|---|---|
| **No.** | **System** | **Vessel Number/Location** | **Description** | **Material** | **Total Volume (US Gallons)** | **Approximate Dimensions (Inside Diameter) × Height or Length in feet and inches (tangent line/tangent line)** |
| 11 | RLD | RLD-VSL-00004<br>L-B001B | LAW C3/C5 Drains/Sump Collection Vessel | Stainless Steel/Inconel 625 | 7,696 | 10’-0” 11’-0” |
| 12 | RLD | RLD-VSL-00005<br>L-0126 | SBS Condensate Collection Vessel | 6% Mo/Stainless Steel | 25,780 | 16’-0” 15’-5” |

1

| Table 4E-2 LAW Vitrification Facility Miscellaneous Units (Systems and Sub-Systems) | | | | | |
|---|---|---|---|---|---|
| **No.** | **System/ Subsystem** | **Component Number/Location** | **Description** | **Material** | **Total Volume (US Gallons)** |
| **LAW Vitrification Facility** | | | | | |
| 1 | LOP | LOP-FCLR-00001 L-0112 | Melter 1 Primary Film Cooler | Stainless Steel | NA |
| 2 | LOP | LOP-FCLR-00002 L-0112 | Melter 1 Standby Film Cooler | Stainless Steel | NA |
| 3 | LOP | LOP-FCLR-00003 L-0112 | Melter 2 Primary Film Cooler | Stainless Steel | NA |
| 4 | LOP | LOP-FCLR-00004 L-0112 | Melter 2 Standby Film Cooler | Stainless Steel | NA |
| 5 | LOP | LOP-SCB-00001 L-0123 | Melter 1 Submerged Bed Scrubber | Ceramic Packing/Hastelloy | 4,948 |
| 6 | LOP | LOP-SCB-00002 L-0124 | Melter 2 Submerged Bed Scrubber | Ceramic Packing/Hastelloy | 4,948 |
| 7 | LOP | LOP-WESP-00001 L-0123 | Melter 1 Wet Electrostatic Precipitator | 6% Molybdenum/Stainless Steel | N/A |
| 8 | LOP | LOP-WESP-00002 L-0124 | Melter 2 Wet Electrostatic Precipitator | 6% Molybdenum/Stainless Steel | N/A |
| 9 | LMP | LMP-MLTR-00001 L-0112 | LAW Melter 1 | Stainless Steel/Alloys | 1,860 |
| 10 | LMP | LMP-MLTR-00002 L-0112 | LAW Melter 2 | Stainless Steel/Alloys | 1,860 |
| 11 | LVP | LVP-SCB-00001 L-0304F | Melter Offgas Caustic Scrubber | Hastelloy/Metal Intalox Packing/Stainless Steel | TBD |

| Table 4E-2 LAW Vitrification Facility Miscellaneous Units (Systems and Sub-Systems) | | | | | |
|---|---|---|---|---|---|
| **No.** | **System/ Subsystem** | **Component Number/Location** | **Description** | **Material** | **Total Volume (US Gallons)** |
| 12 | LVP | LVP-HEPA-00001A L-0304H | Melter Offgas HEPA Filter | Synthetic Fibrous Materials/Stainless Steel | NA |
| 13 | LVP | LVP-HEPA-00001B L-0304H | Melter Offgas HEPA Filter | Synthetic Fibrous Materials/Stainless Steel | NA |
| 14 | LVP | LVP-HEPA-00002A L-0304H | Melter Offgas HEPA Filter | Synthetic Fibrous Materials/Stainless Steel | NA |
| 15 | LVP | LVP-HEPA-00002B L-0304H | Melter Offgas HEPA Filter | Synthetic Fibrous Materials/Stainless Steel | NA |
| 16 | LVP | LVP-HEPA-00003A L-0304H | Melter Offgas HEPA Filter | Synthetic Fibrous Materials/Stainless Steel | NA |
| 17 | LVP | LVP-SCO-00001 (located on LVP SKID-00002) L-0304F | Thermal Catalytic Oxidizer | Stainless Steel | NA |
| 18 | LVP | LVP-SCR-00001 (located on LVP SKID-00002) L-0304F | NOx Selective Catalytic Reduction Unit | Stainless Steel | NA |
| 19 | LVP | LVP-HTR-00001A L-0304H | Melter Offgas HEPA Preheater | Stainless Steel/Incoloy 800 | NA |
| 20 | LVP | LVP-HTR-00001B L-0304H | Melter Offgas HEPA Preheater | Stainless Steel/Incoloy 800 | NA |
| 21 | LVP | LVP-HTR-00002 (located on LVP SKID-00002) L-0304F | Catalytic Oxidizer Electric Heater | Stainless Steel | NA |
| 22 | LVP | LVP-HX-00001 (located on LVP SKID-00002) L-0304F | Catalytic Oxidizer Heat Recovery Unit | Stainless Steel | NA |

| Table 4E-2 LAW Vitrification Facility Miscellaneous Units (Systems and Sub-Systems) | | | | | |
|---|---|---|---|---|---|
| **No.** | **System/ Subsystem** | **Component Number/Location** | **Description** | **Material** | **Total Volume (US Gallons)** |
| 23 | LVP | LVP-ADBR-00001A (located on LVP-SKID-00001) L-0304F | Offgas Mercury Adsorber | Stainless Steel | NA |
| 24 | LVP | LVP-ADBR-00001B (located on LVP-SKID-00001) L-0304F | Offgas Mercury Adsorber | Stainless Steel | NA |
| 25 | LVP | LVP-EXHR-00001A L-0304C | Melter Offgas Exhausters | Stainless Steel | NA |
| 26 | LVP | LVP-EXHR-00001B L-0304D | Melter Offgas Exhausters | Stainless Steel | NA |
| 27 | LVP | LVP-EXHR-00001C L-0304E | Melter Offgas Exhausters | Stainless Steel | NA |

1

| Table 4E-3 LAW Vitrification Facility Secondary Containment Rooms/Areas | | | | |
|---|---|---|---|---|
| **Room/Area** | **Approximate Room/Area Dimensions (L×W, in feet)** | **Miscellaneous Treatment Units or Tanks in Room/Area (Largest Plant Item)** | **Volume of Largest Plant Item in Room/Area (US Gallons)** | **Minimum Secondary Containment Height (feet)** |
| **LAW Vitrification Facility** | | | | |
| 1. L-0123, Melter 1 Process Cell | Minimum secondary containment for these cells has been deleted and superceded by *Flooding Volume for LAW Facility*, 24590-LAW-PER-M-02-002 (DWP, Operating Unit Group, Appendix 9.8). | | | |
| 2. L-0124, Melter 2 Process Cell | | | | |
| 3. L-0126, Effluent Cell | | | | |
| 4. L-B001B, C3/C5 Drains/Sump Collection Vessel Room | | | | |
| 5. L-0218, Caustic Scrub Blowdown Collection Berm | | | | |
| 6. L-0304 F, Caustic Scrubber Curb Area | | | | |
| 7. ASX Sampler Cabinets<br>• ASX-SMPLR-00012 (L-0301)<br>• ASX-SMPLR-00013 (L-0301) | Secondary containment liners for Isolok flush tubing, no minimum liner height required.<br>The LAW ASX sampler upper secondary containment area liner dimensions are approximately 33” X 34”. The lower containment area liner dimensions are approximately 39” X 68” | | | |
| 8. Bulges<br>• LCP-BULGE-00001 (L-0202)<br>• LCP-BULGE-00002 (L-0202)<br>• LCP-BULGE-00003 (L-0202)<br>• LFP-BULGE-00001 (L-0202)<br>• LFP-BULGE-00002 (L-0202)<br>• LOP-BULGE-00001 (L-0202)<br>• LOP-BULGE-00002 (L-0202)<br>• RLD-BULGE-00001 (L-B001A)<br>• RLD-BULGE-00004 (L-0202) | Secondary containment for ancillary equipment, no minimum liner height required | | | |

1

| Table 4E-4 LAW Vitrification Facility Sumps, Leak Detection Boxes, and Floor Drains/Lines | | | | |
|---|---|---|---|---|
| **Sump/Leak Detection Box or Floor Drain/Line I.D.#, Room, and Elevation** | **Maximum Sump/Leak Detection Box Capacity (US Gallons)** | **Sump/Leak Detection Box Level Detection Type** | **Sump/Leak Detection Box or Floor Drain/Line Dimensions (approximate) and Materials of Construction** | **Piping and Instrumentation Diagram Number** |
| **LAW Vitrification Facility** | | | | |
| **Sumps** | | | | |
| RLD-SUMP-00028<br>L-B001B (C3/C5 Drains/Sump Collection Vessel Cell, El. –21’) | 59 | Radar | 24” Dia. x 30” Deep<br>Stainless Steel<br>(6% Mo) | **24590-LAW**<br>-M6-RLD-00002005 |
| RLD-SUMP-00029<br>L-0123 (Process Cell, El. 3’) | 37 | Radar | 30” Dia. x 12” Deep<br>Stainless Steel<br>(6% Mo) | **24590-LAW**<br>-M6-RLD-00003002 |
| RLD-SUMP-00030<br>L-0123 (Process Cell, El. 3’) | 37 | Radar | 30” Dia. x 12” Deep<br>Stainless Steel<br>(6% Mo) | **24590-LAW**<br>-M6-RLD-00003002 |
| RLD-SUMP-00031<br>L-0124 (Process Cell Sump, El. 3’) | 37 | Radar | 30” Dia. x 12” Deep<br>Stainless Steel<br>(6% Mo) | **24590-LAW**<br>-M6-RLD-00003002 |
| RLD-SUMP-00032<br>L-0124 (Process Cell, El. 3’) | 37 | Radar | 30” Dia. x 12” Deep<br>Stainless Steel<br>(6% Mo) | **24590-LAW**<br>-M6-RLD-00003002 |
| RLD-SUMP-00035<br>L-0126 (Effluent Cell, El. 3’) | 37 | Radar | 30” Dia. x 12” Deep<br>Stainless Steel<br>(6% Mo) | **24590-LAW**<br>-M6-RLD-00003003 |

| Table 4E-4 LAW Vitrification Facility Sumps, Leak Detection Boxes, and Floor Drains/Lines | | | | |
|---|---|---|---|---|
| **Sump/Leak Detection Box or Floor Drain/Line I.D.#, Room, and Elevation** | **Maximum Sump/Leak Detection Box Capacity (US Gallons)** | **Sump/Leak Detection Box Level Detection Type** | **Sump/Leak Detection Box or Floor Drain/Line Dimensions (approximate) and Materials of Construction** | **Piping and Instrumentation Diagram Number** |
| RLD-SUMP-00036<br>L-0126 (Effluent Cell, El. 3') | 37 | Radar | 30" Dia. x 12" Deep<br>Stainless Steel<br>(6% Mo) | **24590-LAW**<br>-M6-RLD-00003003 |
| **Bulges/Floor Drains** | | | | |
| RLD-FD-00001 Floor Drain<br>L-B001B (RLD-BULGE-00001 Drain, El. -21') | N/A | N/A | 2" Dia.<br>316L | **24590-LAW**<br>-M6-RLD-00002003 |
| RLD-FD-00035 Floor Drain<br>L-0126 (RLD-BULGE-0000-4 Drain, El. 3') | N/A | N/A | 2" Dia.<br>6% Mo | **24590-LAW**<br>-M6-RLD-00001005 |
| LOF-FD-00001 Floor Drain<br>L-0123 (LOP-BULGE-00001 Drain, El. 3) | N/A | N/A | 2" Dia.<br>6% Mo | **24590-LAW**<br>-M6-LOP-00001003 |
| LCP-FD-00001 Floor Drain<br>L-0123 (LCP-BULGE-00001 Drain, El. 3') | N/A | N/A | 2" Dia.<br>316L | **24590-LAW**<br>-M6-LCP-00001001 |
| LCP-FD-00002 Floor Drain<br>L-0123 (LCP-BULGE-00002 Drain, El. 3') | N/A | N/A | 2" Dia.<br>316L | **24590-LAW**<br>-M6-LCP-00001004 |
| LFP-FD-00001 Floor Drain<br>L-0123 (LFP-BULGE-00001 Drain, El. 3) | N/A | N/A | 2" Dia.<br>316L | **24590-LAW**<br>-M6-LFP-00001005 |
| LOP-FD-00002 Floor Drain<br>L-0124 (LOP-BULGE-00002 Drain, El. 3) | N/A | N/A | 2" Dia.<br>6% Mo | **24590-LAW**<br>-M6-LOP-00002003 |
| LCP-FD-00003 Floor Drain<br>L-0124 (LCP-BULGE-00003 Drain, El. 3) | N/A | N/A | 2" Dia.<br>316L | **24590-LAW**<br>-M6-LCP-00002001 |
| LFP-FD-00002 Floor Drain | N/A | N/A | 2" Dia. | **24590-LAW** |

| Table 4E-4 LAW Vitrification Facility Sumps, Leak Detection Boxes, and Floor Drains/Lines | | | | |
|---|---|---|---|---|
| **Sump/Leak Detection Box or Floor Drain/Line I.D.#, Room, and Elevation** | **Maximum Sump/Leak Detection Box Capacity (US Gallons)** | **Sump/Leak Detection Box Level Detection Type** | **Sump/Leak Detection Box or Floor Drain/Line Dimensions (approximate) and Materials of Construction** | **Piping and Instrumentation Diagram Number** |
| L-0124 (LFP-BULGE-00002 Drain, El. 3) | | | 316L | -M6-LFP-00003005 |
| LVP-FD-00001 Floor Drain<br>L-0218 (Berm floor drain for LVP-TK-00001, El. 28') | N/A | N/A | 4" Dia.<br>316L | **24590-LAW**<br>-M6-LVP-00002003 |
| RLD-FD-00025 Floor Drain<br>L-0304F (Curb floor drain for LVP-TK-00001, El. 48') | N/A | N/A | 4" Dia.<br>316L | **24590-LAW**<br>-M6-RLD-00003001 |
| **Drain Lines** | | | | |
| RLD-WS-20037-S11B-01 Drain Line<br>L-0123 (Melter 1 Encasement Assembly Drain, El. 3') | N/A | N/A | 1" Dia.<br>316L | **24590-LAW**<br>-M6-LMP-00012001 |
| RLD-WS-20033-S11B-11 Drain Line<br>L-0124 (Melter 2 Encasement Assembly Drain, El. 3') | N/A | N/A | 1" Dia.<br>316L | **24590-LAW**<br>-M6-LMP-00042001 |
| **Autosampler Drain Lines** | | | | |
| RLD-WU-22123-S11B-03 ASX Sampler 00012 Lower Containment Drain Line (L-0301, El. 48') | N/A | Thermal Dispersion | 3" Dia.<br>Stainless Steel<br>316L | **24590-LAW**<br>-M6-RLD-00003001 |
| RLD-WU-22117-S11B-03 ASX Sampler 00013 Lower Containment Drain Line (L-0301, El. 48') | N/A | Thermal Dispersion | 3" Dia.<br>Stainless Steel<br>316L | **24590-LAW**<br>-M6-RLD-00003001 |

| Table 4E-5 LAW Vitrification Facility Containment Buildings Summary | |
|---|---|
| **Location** | **Approximate Room Dimensions (L × W × H in feet)** |
| **LAW Vitrification Facility** | |
| 1. L-0112 LAW LSM Gallery Containment Building | 150 x 62 x 24 |
| 2. ILAW Container Finishing Containment Building: | |
| L-0109B Swabbing Area Line 2 | 21 × 15 × 24 |
| L-0109C Decontamination Area Line 2 | 18 × 15 × 24 |
| L-0109D Inert Fill Area Line 2 | 55 × 15 × 24 |
| L-0115B Swabbing Area Line 1 | 21 × 15 × 24 |
| L-0115C Decontamination Area Line 1 | 18 × 15 × 24 |
| L-0115D Inert Fill Area Line 1 | 55 × 15 × 24 |
| L-0109E Container Monitoring/Export Area | 19 × 18 × 14 |
| L-0115E Container Monitoring/Export Area | 19 × 18 × 14 |
| 3. L-0119B LAW Consumable Import/Export Containment Building | 30 x 28 x 17 |
| 4. L-0226A LAW C3 Workshop Containment Building | 34 x 22 x 19 |
| 5. LAW Pour Cave Containment Building: | |
| L-B015A Melter 1 Pour Cave | 16.5 × 20 x 23 |
| L-B013C Melter 1 Pour Cave | 16.5 × 20 x 23 |
| L-B013B Melter 2 Pour Cave | 16.5 × 20 x 23 |
| L-B011C Melter 2 Pour Cave | 16.5 × 20 x 23 |
| L-B011B Future Melter 3 Pour Cave | 16.5 × 20 x 23 |
| L-B009B Future Melter 3 Pour Cave | 16.5 × 20 x 23 |
| 6. ILAW Container Buffer Storage Containment Building: | |
| L-B025C Container Buffer Store | 22 x 22 x 23 |
| L-B025D Container Rework | 22 x 14 x 23 |

# WASTE TREATMENT AND IMMOBILIZATION PLANT
# CHAPTER 4G
# DIRECT-FEED LOW-ACTIVITY WASTE (EFFLUENT MANAGEMENT FACILITY)

## CHANGE CONTROL LOG

Change Control Logs ensure that changes to this unit are performed in a methodical, controlled, coordinated, and transparent manner. Each unit addendum will have its own change control log with a modification history table. The "**Modification Number**" represents Ecology's method for tracking the different versions of the permit. This log will serve as an up to date record of modifications and version history of the unit.

Modification History Table

| Modification Date | Modification Number |
|---|---|
| 09/05/2017 | 8C.2017.6F |
| 12/15/2016 | 8C.2016.Q3 |
| | |

This page intentionally left blank.

# CHAPTER 4G
# DIRECT FEED LOW-ACTIVITY WASTE (EFFLUENT MANAGEMENT FACILITY)

This page intentionally left blank.

# CHAPTER 4G
# DIRECT FEED LOW-ACTIVITY WASTE (EFFLUENT MANAGEMENT FACILITY)

## TABLE OF CONTENTS

4G.0Direct Feed Low-Activity Waste (Effluent Management Facility) ..... 5
4G.1Containers ..... 8
4G.2Tank Systems ..... 8
4G.2.1 Low-Point Drain Vessel (DEP-VSL-00001) ..... 8
4G.2.2 Evaporator Feed Vessel (DEP-VSL-00002) ..... 9
4G.2.3 Evaporator Concentrate Vessels (DEP-VSL-00003A/B/C) ..... 9
4G.2.4 Overhead Sampling Vessels (DEP-VSL-00004A/B) ..... 10
4G.2.5 Process Condensate Lag Storage Vessels (DEP-VSL-00005A/B) ..... 10
4G.3Miscellaneous Units ..... 10
4G.3.1 Evaporator Separator Vessel (DEP-EVAP-00001) ..... 11
4G.3.2 Evaporator Primary Condenser (DEP-COND-00001) ..... 11
4G.3.3 Evaporator Inter-Condenser (DEP-COND-00002) ..... 11
4G.3.4 Evaporator After-Condenser (DEP-COND-00003) ..... 11
4G.3.5 Process Condensate Filter (DEP-FILT-00002) ..... 12
4G.3.6 Evaporator Feed Prefilter (DEP-FILT-00003) ..... 12
4G.3.7 Condensate Duplex Cartridge Filters (DEP-FILT-00004A/B) ..... 12
4G.3.8 Evaporator Concentrate/Feed Vessels LAW Effluent Cooler (DEP-HX-00001) ..... 12
4G.3.9 Evaporator Reboiler (DEP-RBLR-00001) ..... 12
4G.4Secondary Containment and Release Detection for EMF ..... 12
4G.4.1 Low-Point Drain Sump (DEP-SUMP-00001) ..... 13
4G.4.2 Pipeline Containment and Leak Detection ..... 13
4G.4.3 Evaporator Secondary Containment System ..... 14
4G.4.4 Evaporator Condenser Secondary Containment System ..... 14
4G.4.5 Process Condensate Vessel Area Sumps (DEP-SUMP-00005A/B) ..... 14
4G.4.6 Feed Vessel Area Sumps (DEP-SUMP-00004A/B) ..... 15
4G.5Air Emission Control ..... 15
4G.5.1 Direct Feed LAW EMF Vessel Vent Process System (DVP) ..... 15
4G.6EMF Process Sampling ..... 16

## TABLES

Table 4G-1 Effluent Management Facility Tank Systems ..... 17
Table 4G-2 Effluent Management Facility Miscellaneous Units (Systems and Sub-Systems) ..... 18
Table 4G-3 Effluent Management Facility Secondary Containment Rooms/Areas ..... 19
Table 4G-4 Effluent Management Facility Sumps, Leak Detection Boxes, Drain Lines/ Floor Drains 20

## FIGURE

Figure 4G-1 Effluent Management Facility Process Flow ..... 23

## 4G.0 DIRECT FEED LOW-ACTIVITY WASTE (EFFLUENT MANAGEMENT FACILITY)

The Direct Feed Low-Activity Waste (DFLAW) configuration allows for the operation of the Low-Activity Waste (LAW) Vitrification Facility and Analytical Laboratory (Lab) prior to operation of the Pretreatment Facility. In this configuration, low-activity waste is fed directly from the Hanford Tank Farms LAW Pretreatment System (LAWPS) to the LAW Vitrification Facility. The LAWPS is permitted as a separate Treatment, Storage, and Disposal Facility under the Hanford Dangerous Waste Permit. The DFLAW configuration differs from the baseline configuration. In the baseline configuration, low-activity waste and high-activity waste is transferred directly from the Hanford Tank Farms to the Pretreatment Facility and treated by ultrafiltration and cesium ion exchange before transfer to the LAW Vitrification Facility or High-Level Waste (HLW) Vitrification Facility; in addition, the generated off-gas effluents from the LAW Vitrification Facility and HLW Vitrification Facility processes are returned to the Pretreatment Facility. In the DFLAW configuration, low-activity waste bypasses the Pretreatment Facility and feeds directly into the LAW Vitrification Facility. As such, the replication of some functions of the Pretreatment Facility is required. The Effluent Management Facility (EMF) is in place to replicate activities conducted in the baseline configuration, including the management and treatment of the liquid effluent from the LAW Vitrification Facility Radioactive Liquid Waste Disposal (RLD) System and the Lab RLD System, and management of the effluent from the LAW Secondary Offgas/Vessel Vent Process (LVP) System. Waste received at the LAW Vitrification Facility from the LAWPS will not be characterized as ignitable (D001) or reactive (D003); therefore, tanks/vessels associated with the DFLAW configuration are not required to be designed to manage reactive or ignitable wastes.

Permitted processes involved with the DFLAW configuration include the Direct Feed LAW EMF Process (DEP) System, the Direct Feed LAW EMF Vessel Vent Process (DVP) System, and the underground waste transfer lines.

### Direct Feed LAW EMF Process (DEP) System

The DEP System allows the EMF to collect, process, recycle, and dispose of the liquid effluent from the Lab, LAW Vitirification Facility, and underground waste transfer line flushes. The DEP System performs the following functions:

- Receipt of liquid effluent.
- Liquid effluent volume reduction.
- Process stream sampling.
- Waste conditioning.

The DEP System includes the following major components:

- An evaporator system consisting of an evaporator separator vessel (DEP-EVAP-00001), evaporator reboiler (DEP-RBLR-00001), evaporator condensers (DEP-COND-0001/2/3), recirculation pump, and vacuum ejectors.
- Low-Point Drain Vessel (DEP-VSL-00001).
- Evaporator Feed Vessel (DEP-VSL-00002).
- Evaporator Concentrate Vessels (DEP-VSL-00003A/B/C).
- Overhead Sampling Vessels (DEP-VSL-00004A/B).
- Process Condensate Lag Storage Vessels (DEP-VSL-00005A/B).
- Other equipment, including pumps, filters, and associated piping and valves.

The DEP System evaporator loop functions to reduce the volume of liquid effluent that is received from the LAW Vitrification Facility, Lab and underground waste transfer line flushes, and recycle the concentrate back to the LAW Vitrification Facility. The design also supports the transfer of the concentrate to the Hanford Tank Farms and to the tanker truck load out area. Condensate from the DEP

System process can be disposed of at the Liquid Effluent Retention Facility (LERF)/ Effluent Treatment Facility (ETF).

The evaporator loop consists of the evaporator separator vessel, reboiler, condensers, and the recirculation piping. As the liquid effluent circulates through the reboiler, the temperature rises. Then, the liquid rises into the separator vessel, the hydrostatic head diminishes, and flash evaporation occurs near the liquid surface. The liquid stream recirculates in the closed loop while the vapor stream enters the evaporator overheads. The evaporator loop operates under a vacuum to reduce the boiling temperatures and minimize corrosion.

The reboiler is a tube-and-shell heat exchanger. High pressure steam, supplied from the Balance of Facilities (BOF), is used to heat a secondary steam loop that feeds the heat exchanger shell side, while the evaporator feed circulates through the heat exchanger tubes.

### Direct Feed LAW EMF Vessel Vent Process (DVP) System

The DVP System is comprised of two main parts, air inlet, and exhaust. The DVP System provides vessel ventilation for the DEP System vessels, the purpose of the DVP System is to direct vessel vent gases to emission control systems, and purge hydrogen to maintain the vessel hydrogen concentration below dangerous levels.

The DVP System includes the following major components:

- Process Ventilation Preheaters (DVP-HTR-00001A/B).
- Process Ventilation Primary High Efficiency Particulate Air (HEPA) Filters (DVP-HEPA-00003A/B).
- Process Ventilation Secondary HEPA Filters (DVP-HEPA-00004A/B).
- Process Ventilation Exhausters (DVP-EXHR-00001A/B).

For the DEP System vessels in the LAW Effluent Process Building, a purge air inbleed is used to meet the very low required flow rates. The vessel vent is the exhaust portion of the DVP System and provides suction pressure on the vessel headspace, to draw in the purge air, and mitigate hydrogen accumulation. The discharged air is sent through a preheater, two-stage HEPA filters, and through an exhaust fan to discharge out of the EMF stack. The DVP exhaust fans control and maintain the suction pressure inside the various process vessels, maintaining the continuous purge air inbleed.

### Underground Waste Transfer Lines

The underground waste transfer lines installed to support the DFLAW configuration are coaxial lines that are constructed of stainless steel primary pipe, with a carbon steel encasement pipe that is coated with fusion bonded epoxy (FBE). The coating system and water barrier consist of the FBE, polyurethane insulation, and a jacket or thermoplastic outer water barrier made of high density polyethylene (HDPE). Cathodic protection is not needed for the underground waste transfer lines installed to support the DFLAW configuration as the pipe system is made of corrosion resistant materials, providing water resistant construction to isolate the underground waste transfer lines from the soil and moisture.

The underground waste transfer lines transfer waste from various areas to support the DFLAW configuration. Underground waste transfer lines support the receipt of the low-activity waste from LAWPS to the LAW Vitrification Facility, as well as effluent transfers from LAW Vitrification Facility and Lab, to the EMF and the LERF/ETF. Evaporator concentrate is sent back to the LAW Vitrification Facility through the LAWPS underground waste transfer line. In addition, liquid effluent can be transferred from the DEP System to the Hanford Tank Farms.

After every waste transfer from the LAWPS to LAW Vitrification Facility, the underground waste transfer lines are flushed and drained to the EMF low-point drain vessel (DEP-VSL-00001); the effluent

is collected and processed at the EMF. The effluent is monitored for flow and density to minimize the volume of flush liquid that is transferred to the LAW concentrate receipt vessel.

There are eight major WTP underground waste transfer lines that support the EMF process. Line DEP-PB-00009-S32B-03 transfers LAWPS feed from the WTP property boundary to the low-point drain vessel. Line LCP-PB-03368-S32B-03 transfers LAWPS feed and EMF concentrate from the low-point drain vessel to the LAW Vitrification Facility. LAW LVP process effluent and LAW RLD process effluent are transferred from the LAW Vitrification Facility to the EMF through line LVP-ZY-00171-W31A-03. Lab RLD process effluent is transferred from the Lab to the EMF through line RLD-WU-22142-S32B-03. Line DEP-ZS-00069-W31A-03 returns EMF concentrate from the EMF to the WTP property boundary, with transfer to the Hanford Tank Farms. EMF effluent is transferred to the existing LERF/ETF transfer line that connects in between the Pretreatment Facility and the WTP property boundary through lines RLD-ZS-66989-W31A-04 and RLD-ZS-66991-W31A-03.

## EMF Buildings

The EMF, located north of the Lab, is comprised of four buildings, the LAW effluent process building, the LAW effluent drain tank building, the LAW effluent electrical building, and the LAW effluent utility building. The EMF contains an evaporator system, nine major process vessels, three supporting reagent product storage tanks, heating, ventilation and air conditioning (HVAC) equipment, and electrical utilities. The buildings are described in more detail below.

### Building 25 – LAW Effluent Process Building

The LAW effluent process building houses the DEP System and DVP System. The DEP System is the main process system for the EMF and consists of vessels and ancillary equipment used to support the collection, processing, and disposal of the mixed waste effluent from the LAW and Lab Facilities; a more detailed discussion of the processes contained in this building are located in section 4G.2 and 4G.3. The DVP System provides vessel ventilation for the DEP System vessels. A more detailed discussion of this system can be found in 4G.5.

### Building 25A – LAW Effluent Drain Tank Building

The LAW effluent drain tank building consists of the low-point drain vessel (DEP-VSL-00001) and the drain tank maintenance area. The low-point drain vessel is sized to handle flushing of the DFLAW underground waste transfer lines, between the LAWPS and the LAW Vitrification Facility and the effluent lines between the LAW Vitrification Facility, the Lab and the EMF. A more detailed discussion of the processes contained in this building are located in 4G.2.

### Building 26 – LAW Effluent Utility Building

The LAW effluent utility building contains the building ventilation HVAC HEPA filters and fans, and the BOF utility pumps and storage vessels. The LAW effluent utility building shares a ventilation system with the LAW effluent process building. The treated DVP offgas from the LAW effluent process building ties into the exhaust duct in the LAW effluent utility building and is discharged to the atmosphere through the 150-foot-high stack. A more detailed discussion of this process can be found in Section 4G.5.1. The building does not contain equipment that manages dangerous or mixed waste.

### Building 27 – LAW Effluent Electrical Building

The LAW effluent electrical building houses most of the EMF electrical equipment, which includes electrical batteries and control/instrumentation equipment. It has a separate power supply and exhaust system. The building does not contain equipment that manages dangerous or mixed waste.

Figure 4G-1, EMF Process Flow, presents a simplified process flow diagram of the EMF Process.

## 4G.1 CONTAINERS

The dangerous and mixed waste generated at the EMF is managed in 90-day accumulation areas and satellite accumulation areas pursuant to the requirements in WAC 173-303-200, generating dangerous waste on-site. All waste anticipated to be dangerous or mixed waste is managed in accordance with WAC 173-303-170, requirements for generators of dangerous waste, through WAC 173-303-230, special conditions. The dangerous and mixed waste is labeled and characterized in accordance with requirements in WAC 173-303-070, designation of dangerous waste. Information on all 90-day accumulation areas and satellite accumulation areas is maintained as required in the Hanford Dangerous Waste Permit, Part II General Facility Conditions, permit condition II.I.1.a.

The dangerous and mixed waste generated at the EMF is containerized secondary waste. The following are examples of the generated secondary waste:

- Spent or failed equipment
- Offgas HEPA filters
- Personal Protective Equipment
- Spent maintenance materials

## 4G.2 TANK SYSTEMS

Permitted tank systems are designed to comply with bounding design criteria, such as pH, temperature, and pressure conditions. The EMF evaporator feed vessel (DEP-VSL-00002), the overhead sampling vessels (DEP-VSL-00004A/B), evaporator concentrate vessels (DEP-VSL-00003A/B/C), and the process condensate lag storage vessels (DEP-VSL-00005A/B) are located outside in secondary containment areas. The remaining EMF process vessel, the low-point drain vessel (DEP-VSL-00001), is located indoors, in a below grade process area. All tank systems are located within process areas with controlled access.

In general, overflows are prevented by inventory controls in conjunction with level monitoring. The fluid level in a vessel is maintained within low- and high-level ranges. Appropriate alarm settings are used to note deviations from the designed settings. Automatic and operator alarm responses are designed to shut down feed to the vessel when the high-level settings are exceeded.

A list of all EMF tank systems can be found in Table 4G-1, Effluent Management Facility Tank Systems.

### 4G.2.1 Low-Point Drain Vessel (DEP-VSL-00001)

The low-point drain vessel (DEP-VSL-00001) is located below grade, within an enclosed room (ED-B001), in the LAW effluent drain tank building. The low-point drain vessel collects effluent from underground waste transfer line flushes, including effluent from flushes of the underground waste transfer lines.

The low-point drain vessel also collect effluent from the DEP System concentrate transfer line relief valve; west process area sumps (DEP-SUMP-00002A/B), feed vessel area sumps (DEP-SUMP-00004A/B), tanker truck loadout sump (DEP-SUMP-00008); and the drains from the evaporator concentrate/feed vessels LAW effluent cooler (DEP-HX-00001). In addition, the low-point drain vessel collects overflow from several DEP System process vessels, including the evaporator feed vessel (DEP-VSL-00002), evaporator concentrate vessels (DEP-VSL-00003A/B/C), overhead sampling vessels (DEP-VSL-00004A/B), and process condensate lag storage vessels (DEP-VSL-00005A/B), as well as effluent from the sampler return line, evaporator drain line, fume hood drain line, and off-specification evaporator concentrate drain line.

The vessel drain line, overflow pipe, and the low-point drain sump (DEP-SUMP-00001) are decontaminated with demineralized water. The demineralized water used for decontamination is ultimately sent to LERF/ETF.

The low-point drain vessel is equipped with a vessel agitator (DEP-AGT-00001) to help prevent buildup of settled solids in the waste. The agitator has a manual start and operates when transferring or sampling liquid. The low-point drain vessel is vented to the vessel vent header and overflows to the low-point drain area sump through a loop seal. This sump effluent is transferred to the evaporator feed prefilter (DEP-FILT-00003) and then to the evaporator feed vessel by the low-point drain vessel area sump pump. In-vessel pumps (DEP-PMP-00001A/B) are used to transfer the low-point drain vessel contents to the evaporator feed vessel through the evaporator feed prefilter. The evaporator feed prefilter is used to keep any solids larger than 5 microns from entering the evaporator process.

### 4G.2.2 Evaporator Feed Vessel (DEP-VSL-00002)

The evaporator feed vessel (DEP-VSL-00002) receives filtered effluent from multiple sources and caustic solution from the caustic tank (SHR-TK-00013) for pH adjustment.

Effluent from the LAW plant wash vessel (RLD-VSL-00003), the RLD submerged bed scrubber condensate collection vessel (RLD-VSL-00005), the Lab RLD vessel (RLD-VSL-00164), and the low-point drain vessel (DEP-VSL-00001) are collected in the evaporator feed vessel prior to transfer to the evaporator separator vessel (DEP-EVAP-00001).

The evaporator feed vessel also receives off-specification effluent from the overhead sampling vessels (DEP-VSL-00004A/B), off-specification concentrate from the evaporator separator vessel (DEP-EVAP-00001), and sump effluent from the low-point drain sump (DEP-SUMP-00001).

The evaporator system concentrates the feed from the evaporator feed vessel to reduce the overall effluent volume for recycle to the LAW Vitrification Facility, or for transfer to the Hanford Tank Farms and the tanker truck load out area. In addition, the evaporator system provides an overhead condensate that can be processed by LERF/ETF.

The evaporator feed vessel is equipped with eductors to mix vessel contents to support sampling. The eductors circulate fluid from the evaporator feed vessel using recirculation pumps and operate while the pumps are running. In the event of an off-normal condition within the EMF, the evaporator feed vessel recirculation pumps can bypass the evaporator separator vessel and transfer effluent to the Hanford Tank Farms after passing through the evaporator concentrate/feed vessels LAW effluent cooler (DEP-HX-00001).

### 4G.2.3 Evaporator Concentrate Vessels (DEP-VSL-00003A/B/C)

The evaporator concentrate vessels (DEP-VSL-00003A/B/C) are used to accumulate concentrated effluent from the evaporator separator vessel (DEP-EVAP-00001). In addition, the evaporator concentrate vessels may receive filter backflush from the evaporator feed prefilter (DEP-FILT-00003) and caustic solution from the caustic tank (SHR-TK-00013). The concentrate effluent can either be recycled back to the LAW LCP vessels (LCP-VSL-00001/2), to the Hanford Tank Farms, or to the tanker truck load out area. In the event of an overflow, the liquid flows by gravity into the low-point drain vessel (DEP-VSL-00001). Each batch is sampled in the evaporator concentrate vessels and characterized before it is sent to the LAW Vitrification Facility or the Hanford Tank Farms.

The evaporator concentrate transfer pumps (DEP-PMP-00003A/B) are used to circulate fluid from the evaporator concentrate vessels via eductors. The evaporator concentrate pumps also transfer the evaporator concentrate vessels' contents to LAW LCP vessels, the Hanford Tank Farms, or the tanker truck load out area.

When transferring concentrate to the Hanford Tank Farms, the effluent stream must comply with the Hanford Tank Farm waste acceptance criteria. The evaporator concentrate transfer pumps transfer the effluent through the evaporator feed prefilter (DEP-FILT-00003) to remove solids, the filtered effluent is mixed with process condensate and sodium nitrite, as necessary, and then the effluent is sent through the

evaporator concentrate/feed vessel LAW effluent cooler (DEP-HX-00001) before being sent to the Hanford Tank Farms.

### 4G.2.4 Overhead Sampling Vessels (DEP-VSL-00004A/B)

The overhead sampling vessels (DEP-VSL-00004A/B) receive inter and after condenser condensate from the evaporator primary condenser (DEP-COND-00001), inter-condenser (DEP-COND-00002) and the after-condenser (DEP-COND-00003), caustic scrubber fluids from the LVP system (LVP-TK-00001), off-specification condensate from the process condensate lag storage vessels (DEP-VSL-00005A/B), effluent from west process area sumps (DEP-SUMP-00002A/B), effluent from the feed vessel area sumps (DEP-SUMP-00004A/B) and liquid from the non-radioactive liquid waste disposal system (NLD) sumps (NLD-SUMP-00031/32). Only qualified effluent is transferred to the overhead sampling vessels. Effluent in the west process area sumps and the feed vessel area sumps is also characterized using sampling or process knowledge prior to transfer to the overhead sampling vessels. Each process batch is sampled in the concentrate vessels and characterized before it is sent to the LAW facility or to the Hanford tank farms. Similarly, each batch is sampled in the overhead sampling vessels and characterized before it is sent to the process condensate lag storage vessels. If the waste does not meet LERF/ETF requirements (i.e., off-specification), it can be blended in the other overhead sampling vessel in attempt to meet the LERF/ETF requirements. If required, the liquid effluent can be transferred to the evaporator feed vessel (DEP-VSL-00002).

The overhead sampling vessel transfer/recirculation pumps (DEP-PMP-00004A/B/C) are used to recirculate the overhead sampling vessels contents to a sample connection, where samples are collected and fluid is returned to the overhead sampling vessels through the eductors. After the content quality has been verified through laboratory testing, pumps are used to transfer the contents to the process condensate lag storage vessels. In the event of an overflow, the liquid gravity drains to the low-point drain vessel (DEP-VSL-00001).

### 4G.2.5 Process Condensate Lag Storage Vessels (DEP-VSL-00005A/B)

The process condensate lag storage vessels (DEP-VSL-00005A/B) receive batches of process condensate from the overhead sampling vessels (DEP-VSL-00004A/B), secondary steam blowdown (SCW-VSL-00054) and effluent from the east process area sumps (DEP-SUMP-00003A/B) and the process condensate vessel area sumps (DEP-SUMP-00005A/B). The vessels allow for lag storage before sending the process condensate to the LERF/ETF. In the event of an overflow, the liquid will flow by gravity into the low-point drain vessel (DEP-VSL-00001). While sampling normally occurs in the overhead sampling vessels, the process condensate vessel can also be sampled prior to transfer to LERF/ETF.

Recirculation pumps are used to circulate fluid in the process condensate lag storage via eductors. The recirculation pumps are also used to flush the evaporator feed prefilter (DEP-FILT-00003), flush the low-point drank vessel transfer pumps, flush the pump suction lines of the three evaporator concentrate vessels, as well as dilute evaporator concentrate prior to transfer back to the Hanford Tank Farms. The condensate is added to the evaporator concentrate in a tee prior to the evaporator concentrate/feed vessel LAW effluent cooler (DEP-HX-00001). The flow ratios, based upon sampling before the transfer, are recorded and a sample is taken for post transfer confirmation to verify that the transfer meets the Hanford Tank Farms waste acceptance criteria. The effluent is then transferred to the Hanford Tank Farms.

## 4G.3 MISCELLANEOUS UNITS

The following miscellaneous units are part of the DEP System and are managed under this permit as tanks and tank systems. Table 4G-2 Effluent Management Facility Miscellaneous Units (Systems and Sub-Systems) summarizes the miscellaneous units within the EMF.

### 4G.3.1 Evaporator Separator Vessel (DEP-EVAP-00001)

The evaporator separator vessel (DEP-EVAP-00001) receives feed from the evaporator feed vessel (DEP-VSL-00002) and circulates the contents through the evaporator reboiler (DEP-RBLR-00001). The stream from the evaporator reboiler is introduced below the liquid level and flashes to steam in the vacuum atmosphere at the liquid surface. The overhead vapors, consisting mainly of water, are processed to remove entrained liquid, with the overhead vapor continuing on to the evaporator primary condenser (DEP-COND-00001). The majority of the bottom liquid is recycled through the evaporator reboiler with a small amount sent to the evaporator concentrate vessels (DEP-VSL-00003A/B/C).

The evaporator separator vessel is equipped with nozzles in the vessel to spray process condensate on the demister pads and with an impingement plate tray to remove larger water droplets. The evaporator separator vessel also has a nozzle for injection of antifoam reagent. A circulation pump is used to transfer evaporator separator vessel contents to the evaporator reboiler. The evaporator reboiler adds heat to the contents to cause evaporation in the evaporator separator. Multiple transfer options are considered depending on the density, flow, and radiation of the concentrate; the effluent may be discharged to the evaporator concentrate vessels, recirculated back to the evaporator separator vessel, or if off-specification, transferred to the evaporator feed vessel. In addition, a drain line is provided from the evaporator separator vessel to the low-point drain vessel (DEP-VSL-00001) to drain the evaporator during maintenance.

### 4G.3.2 Evaporator Primary Condenser (DEP-COND-00001)

The evaporator primary condenser (DEP-COND-00001) is the primary condenser for the evaporator separator vessel (DEP-EVAP-00001). The overhead vapors from the top of the evaporator separator vessel are condensed in the shell and tube condenser using a secondary cooling water loop. The condensate is pumped to the overhead sampling vessels (DEP-VSL-00004A/B) by evaporator condensate pumps (DEP-PMP-00006A/B), or sent back to the evaporator separator vessel as reflux. A portion of the condensate is also filtered via the condensate duplex cartridge filters (DEP-FILT-00004A/B) and used to spray the demister pads and for intermittent wash down of the evaporator separator vessel.

The vacuum for the evaporator separator vessel is established and maintained through condensing the vapor into liquid in the evaporator primary condenser. The first stage ejector (DEP-EJCTR-00001) is used for additional pressure control in the evaporator separator vessel.

### 4G.3.3 Evaporator Inter-Condenser (DEP-COND-00002)

Non-condensable overhead vapor is moved from the evaporator separator vessel (DEP-EVAP-00001) and evaporator primary condenser (DEP-COND-00001) via the first stage ejector and discharged to the evaporator inter-condenser (DEP-COND-00002). The evaporator inter-condenser and evaporator after-condenser (DEP-COND-00003) work with the steam ejectors to create a vacuum in the evaporator separator vessel.

### 4G.3.4 Evaporator After-Condenser (DEP-COND-00003)

The second stage ejector (DEP-EJCTR-00002) pulls vapor from evaporator inter-condenser (DEP-COND-00002) and discharges into the evaporator after-condenser (DEP-COND-00003), where the steam is condensed and the remaining vapor is drawn into the vessel vent header. The condensate from the condensers flows to a drain pot on the boot of the primary condenser, from there it is pumped by evaporator condensate pumps (DEP-PMP-00006A/B) to the overhead sampling vessels (DEP-VSL-00004A/B), and/or back to the evaporator separator vessel (DEP-EVAP-00001) to be used as continuous mesh-wash spray or intermittent wash-down, or sent back to the evaporator feed vessel as reflux.

### 4G.3.5 Process Condensate Filter (DEP-FILT-00002)

Prior to transfer to LERF/ETF, effluent is filtered through a 5-micron process condensate filter (DEP-FILT-00002) downstream of the process condensate lag storage transfer pumps (DEP-PMP-00005A/B).

### 4G.3.6 Evaporator Feed Prefilter (DEP-FILT-00003)

The evaporator feed prefilter (DEP-FILT-00003) is used to remove solids larger than 5 microns from the effluent entering the evaporator feed vessel (DEP-VSL-00002). It filters all effluent except for off-specification recycled condensate from overhead sampling vessels (DEP-VSL-00004A/B), contaminated secondary condensate from reboiler condensate collection vessel (DEP-VSL-00008), and off-specification concentrate from evaporator separator vessel (DEP-EVAP-00001). Filtered solids are flushed to the evaporator concentrate vessels (DEP-VSL-00003A/B/C), where the solids are mixed with the evaporator concentrate for transfer back to the LAW Vitrification Facility or filtered through the evaporator feed prefilter and sent the Hanford Tank Farms. Filtered solids do not enter the evaporator feed vessel.

### 4G.3.7 Condensate Duplex Cartridge Filters (DEP-FILT-00004A/B)

A portion of the condensate from the evaporator primary condenser (DEP-COND-00001) is also filtered via the condensate duplex cartridge filters (DEP-FILT-00004A/B) and used to spray off the demister pads or for intermittent wash down of the evaporator separator vessel (DEP-EVAP-00001).

### 4G.3.8 Evaporator Concentrate/Feed Vessels LAW Effluent Cooler (DEP-HX-00001)

The evaporator concentrate/feed vessels LAW effluent cooler (DEP-HX-00001) uses plant cooling water to cool the effluent stream prior to return to Hanford Tank Farms per the Tank Farm acceptance criteria; it is a plate and frame heat exchanger, where metal plates are used to transfer heat between the effluent and the plant cooling water. The effluent stream may be mixed with sodium nitrite and/or process condensate, as necessary.

### 4G.3.9 Evaporator Reboiler (DEP-RBLR-00001)

The evaporator reboiler **(**DEP-RBLR-00001) is a forced flow shell and tube reboiler that heats the high flow rate bottom stream from the evaporator separator vessel (DEP-EVAP-00001). The process fluid is on the tube side, with saturated steam on the shell side. The evaporator circulation pump (DEP-PMP-00017) is used to circulate evaporator separator vessel contents through the evaporator reboiler and back to the evaporator separator vessel. The heat input from the stream is adjusted depending on the temperature, level, and vaporization rate in the evaporator separator vessel. The evaporator reboiler has temperature and level sensing capabilities on the utility outlet piping, which interfaces with the Process Control System (PCJ) to remotely monitor temperature and level on the process fluid side. Also, the evaporator reboiler has conductivity sensing capability for the utility side of the reboiler, which interfaces with the PCJ to remotely monitor the evaporator reboiler for tube leaks. The reboiler condensate collection vessel (DEP-VSL-00008) manages clean steam condensate as part of a closed loop system. During normal operations, it does not handle dangerous waste or mixed waste.

## 4G.4 SECONDARY CONTAINMENT AND RELEASE DETECTION FOR EMF

The EMF is constructed of steel reinforced concrete. The design ensures that the containment units have sufficient structural strength to prevent collapse or failure. The primary barriers of the EMF containment units are designed to withstand loads from the movement of personnel, wastes, and equipment handling. Stainless steel liners are provided on the interior floors, and a portion of the walls, for the areas containing the low-point drain vessel (DEP-VSL-00001), the evaporator feed vessel (DEP-VSL-00002), and the evaporator concentrate vessels (DEP-VSL-00003A/B/C). The remaining containment areas are provided with special protective coatings that are constructed with chemical-resistant water stops and compatible with the stored waste.

The specifications for the preparation, design, and construction of the secondary containment systems are documented in Operating Unit Group 10, Appendix 13.7, and designed to applicable national codes and standards. Construction of tank systems to required specifications ensures that foundations are capable of supporting tank and secondary containment systems and that uneven settling and failures from pressure gradients will not occur.

Table 4G-3, Effluent Management Facility Secondary Containment Rooms/Areas and Table 4G-4, Effluent Management Facility Sumps, Leak Detection Boxes (LDB), Drain Lines and Floor Drains, summarizes the EMF secondary containment systems.

### 4G.4.1 Low-Point Drain Sump (DEP-SUMP-00001)

The low-point drain sump (DEP-SUMP-00001) is used to capture overflow effluent from the low-point drain vessel (DEP-VSL-00001). In addition, underground waste transfer line leak detection box drain headers discharge to the low-point drain sump. The low-point drain sump discharges to the evaporator feed vessel (DEP-VSL-00002). The liquid level in the low-point drain sump is monitored with transmitters that communicate with the PCJ and provide control room alarm indication.

### 4G.4.2 Pipeline Containment and Leak Detection

The DEP System has Leak Detection Boxes (LDBs) on the headers of the coaxial underground waste transfer piping. Leak detection boxes are provided for the underground transfer lines from LAWPS to LAW Vitrification Facility. Leak detection boxes are also provided on underground transfer lines between EMF and LAW Vitrification Facility, between EMF and Lab, between EMF and the Hanford Tank Farms, and between EMF and the LERF/ ETF. The WTP underground transfer line LDBs are located in the LAW effluent drain tank building (Room ED-B001) with the exception of the LERF/ ETF transfer line LDBs which are located at the interface point on the WTP property line. The LDBs are designed to detect a leak within the annular space of the coaxial piping. The liquid level in the sumps is monitored with transmitters that communicate with the PCJ and provide control room alarm indication.

Within EMF, the pipelines associated with the tank systems/miscellaneous units are primarily single-walled. Secondary containment is provided for piping within the plant through the use of special protective coatings and waterstops or stainless liners in process areas and process rooms. A short section of process piping is located in a pipe chase in Room ED-CH01, between the west process area and the low-point drain tank area, where coaxial piping is used. The leak detection equipment located within the process areas and process rooms sumps alert operators of a piping leak through the use of level detection instrument alarms. The west process area and the low-point drain area are connected by a pipe chase with coaxial piping that drains to the low-point drain sump (DEP-SUMP-00001).

For all secondary containment area sumps, residual liquids may be present after the sump has been flushed and pumped using the large transfer pump. When residual liquid is detected in sumps in readily accessible areas, an entry will occur to remove the residual liquid using a portable sump pump or absorbent device. An exception to this process is in place for the feed vessel area sumps (DEP-SUMP-00004A/B) in room E-0105. These sumps include designated sample pumps (DEP-PMP-00042A/B) located in the EMF Sampling Fume Hood (DEP-HOOD-00001). The pumps are designed to support sampling of the sumps as well as the removal of small volumes of precipitation or residual liquids after the large transfer pump has completed the transfer.

The leak detection instrumentation for all secondary containment area sumps include a Level Computation Relay (LKY) function. The LKY function indicates an increase in fluid levels in the sump, even when residual liquid is present.

Design details for EMF Sumps, LDBs, drain lines and floor drains are included in Table 4G-4, and are shown on the process and instrumentation diagrams for DEP systems located in Operating Unit Group 10, Appendix 13.2.

### 4G.4.3 Evaporator Secondary Containment System

The secondary containment system and associated ancillary equipment for the evaporator separator vessel (DEP-EVAP-00001) is located in the area known as the west process area, located in the LAW effluent process building. The west process area sumps (DEP-SUMP-00002A/B) are located in Room E-0103. The west process area sumps and level detection instruments detect leakage from the evaporator separator vessel, evaporator feed prefilter (DEP-FILT-00003), and the additional ancillary equipment associated with the evaporator separator vessel. The west process area is sloped to the room sumps and is provided with a special protective coating and waterstops as part of secondary containment.

Fluid contained in the west process area sumps is transferred to the overhead sampling vessels (DEP-VSL-00004A/B) or the low-point drain vessel (DEP-VSL-00001) by sump pumps (DEP-PMP-00032A/B). The liquid level in the west process area sumps is monitored with transmitters that communicate with the PCJ and provide control room alarm indication.

### 4G.4.4 Evaporator Condenser Secondary Containment System

The secondary containment system for the evaporator condensers (DEP-COND-00001/2/3) and associated ancillary equipment is located in the area known as the east process area. The east process area sumps (DEP-SUMP-00003A/B) are located in Room E-0102. The east process area sumps and level detection instruments detect leakage from the evaporator condensers, the evaporator reboiler (DEP-RBLR-00001), the evaporator concentrate/feed vessels LAW effluent cooler (DEP-HX-00001), and the ancillary equipment associated with the evaporator condensers and evaporator reboiler. The east process area is sloped to the east process area sumps and is provided with a special protective coating and waterstops as part of secondary containment.

Fluid contained in the east process area sumps is transferred to the process condensate lag storage vessels (DEP-VSL-00005A/B) by sump pumps (DEP-PMP-00033A/B). The liquid level in sumps is monitored with transmitters that communicate with the PCJ and provide control room alarm indication.

### 4G.4.5 Process Condensate Vessel Area Sumps (DEP-SUMP-00005A/B)

The process condensate vessel area sumps (DEP-SUMP-00005A/B) are located in Room E-0106. The process condensate vessel area sumps are equipped with level detection instruments to detect precipitation or leakage from the overhead sampling vessels (DEP-VSL-00004A/B) and the process condensate lag storage vessels (DEP-VSL-00005A/B). The process condensate vessel area sumps also collect leakage from ancillary equipment located in this room. Room E-0106 is sloped to the sumps and is provided with a special protective coating and waterstops as part of secondary containment.

Fluid contained in the process condensate vessel area sumps is transferred to the process condensate lag storage vessels (DEP-VSL-00005A/B) by sump pumps (DEP-PMP-00035A/B). Room E-0106 is an easily accessible area, and sump liquid will be transferred to the lag storage vessels after an operator verifies that the source of the sump effluent did not originate in either of the lag storage vessels. When effluent is transferred from a sump to a vessel in a shared secondary containment area, the effluent will only be transferred to a non-leaking vessel.

If sampling verifies that the source of liquid in the overhead sampling vessel area sumps is precipitation, large volumes of precipitation can be transferred to the process condensate lag storage vessels (DEP-VSL-00005A/B) to be treated and disposed at the LERF/ETF. If small volumes of precipitation are accumulated, the liquid from the sumps can be manually transferred to a container and managed as non-dangerous waste. The effluent in the sumps will be removed within 24 hours or as practicable after receipt of the sample results.

A small volume of residual liquids may be present after the sump has been flushed and pumped using the large transfer pump. When residual liquid is detected in Room E-106 sumps, an entry will occur to remove the residual liquid using a portable pump or absorbent spill devices.

The liquid level in the sump is monitored and the sump is equipped with level transmitters that communicate with the PCJ and provide a control room alarm indication. The leak detection instrumentation for all secondary containment area sumps include a LKY function. The LKY function indicates an increase in fluid levels in the sump, even when residual liquid is present.

### 4G.4.6 Feed Vessel Area Sumps (DEP-SUMP-00004A/B)

The feed vessel area sumps (DEP-SUMP-00004A/B) are located in Room E-0105 and provide leak detection for the evaporator feed vessel (DEP-VSL-00002) and the evaporator concentrate vessels (DEP-VSL-00003A/B/C). The sumps also collect leakage from ancillary equipment or precipitation collected in Room E-0105. The room is sloped to the feed vessel area sumps. The secondary containment area located in the room is provided with a stainless steel liner. The liquid level in the feed vessel area sumps is monitored with transmitters that communicate with the process control system (PCJ) and provide control room alarm indication. Due to radiation dose rates there is limited access to Room E-0105.

If sampling verifies that source of liquid in the feed vessel area sumps is precipitation, large volumes of precipitation can be transferred to the overhead sampling vessels to be returned to the process. If small volumes of precipitation are accumulated, the liquid from the sample pumps (DEP-PMP-00042A/B) will be discharged to the DEP-HOOD-00001 drain that discharges to the low-point drain vessel (DEP-VSL-00001). Alternately, precipitation can be discharged to a container and managed as non-dangerous waste. The effluent in the sumps will be removed within 24 hours or as practicable after receipt of the sample results.

A small volume of residual liquids may be present after the sump has been flushed and pumped using the large transfer pump. When residual liquid is detected the sample pumps (DEP-PMP-00042A/B) can be used to remove the residual liquids after the large transfer pump has completed the transfer.

The leak detection instrumentation for all secondary containment area sumps include a LKY function. The LKY function indicates an increase in fluid levels in the sump, even when residual liquid is present. The feed vessel area sumps are equipped with pumps that transfer the liquid to the appropriate vessel; the liquid is transferred after sampling occurs to characterize the liquid. Precipitation collected in the feed vessel area sumps can be transferred by sump pumps (DEP-PMP-00034A/B) to the overhead sampling vessels (DEP-VSL-00004A/B). Effluent from a spill is transferred to the low-point drain vessel (DEP-VSL-00001) by sump pumps (DEP-PMP-00034A/B) and recycled back into the process.

## 4G.5 AIR EMISSION CONTROL

### 4G.5.1 Direct Feed LAW EMF Vessel Vent Process System (DVP)

The Direct Feed LAW EMF Vessel Vent Process System (DVP) is comprised of two main parts, air intake and exhaust. The DVP is designed to maintain hydrogen levels below dangerous levels and remove mixed waste particulates that may be present in the gases that fill the headspace of select DEP System process vessels. The DEP System process vessels and condenser that directly interface with the DVP are the low-point drain vessel (DEP-VSL-00001), evaporator feed vessel (DEP-VSL-00002), evaporator concentrate vessels (DEP-VSL-00003A/B/C), overhead sampling vessels (DEP-VSL-00004A/B), process condensate lag storage vessels (DEP-VSL-00005A/B) and the evaporator after condenser (DEP-COND-00003). The headspace in the evaporator separator vessel (DEP-EVAP-00001) is exhausted by the DVP through the evaporator condensers (DEP-COND-00001/2/3). The inlet air is taken from lower contamination areas throughout the building to provide purged air for maintaining the DEP System process vessels below the lower flammability limit for hydrogen.

In the LAW effluent process building, the exhaust air is sent through a preheater (DVP-HTR-00001A/B), two-stages of HEPA filters (DVP-HEPA-00004A/B) and (DVP-HEPA-00003A/B), and an exhaust fan (DVP-EXHR-00001A/B). The exhaust fan is downstream of the DEP System process vessels, preheater and HEPA filters, to ensure that the DEP System vessel headspaces are at negative pressure.

Downstream of the EMF Active Confinement Ventilation System (ACV) HEPA filters and exhaust fans, the treated DVP offgas ties into the LAW effluent utility building exhaust duct, where it is discharged through the 150-foot-high EMF stack. The tie-in point to the LAW effluent utility building exhaust duct is upstream of the stack monitoring systems, which monitor the exhaust air streams prior to discharge to the atmosphere.

## 4G.6 EMF PROCESS SAMPLING

A liquid sampling station (DEP-HOOD-00001) is provided for the manual sampling of eight unique EMF process fluid streams, while maintaining the safety of the operator/worker. The sampling station consists of a standard fume hood, the low-point drain vessel (DEP-VSL-00001) process pipelines, manual sampling collection points, utilities systems and a drain system. The seven EMF process sample streams include samples from:

- DEP-VSL-00001
- DEP-VSL-00002
- DEP-VSL-00003A/B/C
- DEP-VSL-00004 A/B
- DEP-VSL-00005A/B
- DEP-EVAP-00001
- DEP-HX-00001

The fume hood functions to capture, confine, and exhaust fumes, vapors, and particulate matter produced or generated within the enclosure. The process pipelines provide primary containment for the radioactive process fluid to be sampled, and the hood is located within the east process area (Room E-0102). Process pipelines bring the process fluids to the sampling station, recirculate the stream before the sample is collected to ensure the sample is representative for the batch, and provide the means to collect the sample into a sampling bottle. A system of valves is installed on the pipelines and used to control the flow during the sampling. The manual sampling collection points are individual points for each process vessel and are designed to hold and secure the sampling bottle during collection.

The utility systems are provided in the sampling station to allow for flushing and cleanup of the sampling lines at completion of the sampling campaign, and cleanup of the sampling station work area, whenever needed. The drain system collects the liquid waste resulting from the line flushing process and from the hood cleanup. The drain system connects the liquid sampling station and drains to the low-point drain vessel (DEP-VSL-00001).

**Table 4G-1 Effluent Management Facility Tank Systems**

| No. | System | Vessel Number/Location | Description | Material | Approximate Total Volume (US Gallons) | Approximate Dimensions (Inside Diameter × Height or Length in feet) (tangent line/tangent line) |
|---|---|---|---|---|---|---|
| 1 | DEP | DEP-VSL-00001<br>ED-B001 | Low-point drain vessel | Reserved | 18,000 | 14 ft x 12.75 ft |
| 2 | DEP | DEP-VSL-00002<br>E-0105 | Evaporator feed vessel | Reserved | 42,300 | 14 ft x 32 ft |
| 3 | DEP | DEP-VSL-00003A<br>E-0105 | Evaporator concentrate vessel | Reserved | 14,805 | 12 ft x 13.5 ft |
| 4 | DEP | DEP-VSL-00003B<br>E-0105 | Evaporator concentrate vessel | Reserved | 14,805 | 12 ft x 13.5 ft |
| 5 | DEP | DEP-VSL-00003C<br>E-0105 | Evaporator concentrate vessel | Reserved | 14,805 | 12 ft x 13.5 ft |
| 6 | DEP | DEP-VSL-00004A<br>E-0106 | Overhead sampling vessel | Reserved | 40,800 | 14 ft x 30.75 ft |
| 7 | DEP | DEP-VSL-00004B<br>E-0106 | Overhead sampling vessel | Reserved | 40,800 | 14 ft x 30.75 ft |
| 8 | DEP | DEP-VSL-00005A<br>E-0106 | Process condensate lag storage vessel | Reserved | 127,260 | 25 ft x 29.5 ft |
| 9 | DEP | DEP-VSL-00005B<br>E-0106 | Process condensate lag storage vessel | Reserved | 127,260 | 25 ft x 29.5 ft |

**Table 4G-2 Effluent Management Facility Miscellaneous Units (Systems and Sub-Systems)**

| No. | System/ Subsystem | Component Number/Location | Description | Material | Total Volume (US gallons) |
|---|---|---|---|---|---|
| **Effluent Management Facility** | | | | | |
| 1 | DEP | DEP-COND-00001 E-0102 | DEP Evaporator Primary Condenser | Reserved | NA |
| 2 | DEP | DEP-COND-00002 E-0102 | DEP Evaporator Inter-Condenser | Reserved | NA |
| 3 | DEP | DEP-COND-00003 E-0102 | DEP Evaporator After-Condenser | Reserved | NA |
| 4 | DEP | DEP-EVAP-00001 E-0103 | DEP Evaporator Separator Vessel | Reserved | NA |
| 5 | DEP | DEP-FILT-00002 E-0103 | DEP Process Condensate Filter | Reserved | NA |
| 6 | DEP | DEP-FILT-00003 E-0103 | DEP Evaporator Feed Prefilter | Reserved | NA |
| 7 | DEP | DEP-FILT-00004A E-0102 | DEP Condensate Duplex Cartridge Filter | Reserved | NA |
| 8 | DEP | DEP-FILT-00004B E-0102 | DEP Condensate Duplex Cartridge Filter | Reserved | NA |
| 9 | DVP | DVP-HTR-00001A E-0102 | Process Ventilation Preheater | Reserved | NA |
| 10 | DVP | DVP-HTR-00001B E-0102 | Process Ventilation Preheater | Reserved | NA |
| 11 | DVP | DVP-HEPA-00003A E-0102A | Process Ventilation Primary HEPA Filter | Reserved | NA |
| 12 | DVP | DVP-HEPA-00003B E-0102A | Process Ventilation Primary HEPA Filters | Reserved | NA |
| 13 | DVP | DVP-HEPA-00004A E-0102A | Process Ventilation Secondary HEPA Filters | Reserved | NA |
| 14 | DVP | DVP-HEPA-00004B E-0102A | Process Ventilation Secondary HEPA Filters | Reserved | NA |
| 15 | DEP | DEP-HX-00001 E-0103 | Evaporator Concentrate/Feed Vessels LAW Effluent Cooler | Reserved | NA |

| No. | System/ Subsystem | Component Number/Location | Description | Material | Total Volume (US gallons) |
|---|---|---|---|---|---|
| 16 | DEP | DEP-RBLR-00001 E-0103 | DEP Evaporator Reboiler | Reserved | NA |
| 17 | DVP | DVP-EXHR-00001A E-0102 | Process Ventilation Exhausters | Reserved | NA |
| 18 | DVP | DVP-EXHR-00001B E-0102 | Process Ventilation Exhausters | Reserved | NA |

**Table 4G-3 Effluent Management Facility Secondary Containment Rooms/Areas**

| Room/Area | Approximate Room/Area Dimensions (L×W, in feet) | Miscellaneous Treatment Units or Tanks in Room/Area (Largest Plant Item) | Volume of Largest Plant Item in Room/Area (US Gallons) | Minimum Secondary Containment Height (feet) |
|---|---|---|---|---|
| E-0102 east evaporator process area | 62 ft x 94 ft 6 in. | Process condensate lag storage vessel | 127,260 | 4 ft 6 in. |
| E-0103 west evaporator process area | 62 ft x 56 ft 6 in. | Evaporator feed vessel | 42,300 | 3 ft 5 in. |
| ED-B001 low-point drain vessel area | 28 ft x 33 ft | Low-point drain vessel | 18,000 | 4 ft 2 in. |
| E-0105-evaporator feed vessel area | 45 ft 6 in. x 39 ft | Evaporator feed vessel | 42,300 | 5 ft 2 in. |
| E-0106 process condensate lag storage vessel area | 45 ft6 in. x 84 ft 4 in. | Process condensate lag storage vessel | 127,260 | 6 ft 10 in. |

**Table 4G-4 Effluent Management Facility Sumps, Leak Detection Boxes, Drain Lines/ Floor Drains**

| Sump/Leak Detection Box, or Floor Drain/Line I.D.# and Room# | Maximum Sump/Leak Detection Box Capacity (gallons) | Sump/Leak Detection Box Level Detection Type | Sump, Leak Detection Box or Floor Drain/Line Dimensions (approximate) and Materials of Construction | Piping and Instrumentation Diagram Number |
|---|---|---|---|---|
| **Effluent Management Facility** | | | | |
| **Sumps** | | | | |
| DEP-SUMP-00001<br>ED-B001 | ~58 | Radio Frequency (RF) Capacitance | 24 in. Dia. x 30 in. Length<br>304L SS | **24590-BOF**<br>-M6-DEP-00001002 |
| DEP-SUMP-00002A<br>E-0103 | ~58 | RF Capacitance | 24 in. Dia. x 30 in. Length<br>304L SS | **24590-BOF**<br>-M6-DEP-00009001 |
| DEP-SUMP-00002B<br>E-0103 | ~58 | RF Capacitance | 24 in. Dia. x 30 in. Length<br>304L SS | **24590-BOF**<br>-M6-DEP-00009001 |
| DEP-SUMP-00003A<br>E-0102 | ~58 | RF Capacitance | 24 in. Dia. x 30 in. Length<br>304L SS | **24590-BOF**<br>-M6-DEP-00009004 |
| DEP-SUMP-00003B<br>E-0102 | ~58 | RF Capacitance | 24 in. Dia. x 30 in. Length<br>304L SS | **24590-BOF**<br>-M6-DEP-00009004 |
| DEP-SUMP-00004A<br>E-0105 | ~58 | RF Capacitance | 24 in. Dia. x 30 in. Length<br>304L SS | **24590-BOF**<br>-M6-DEP-00009002 |
| DEP-SUMP-00004B<br>E-0105 | ~58 | RF Capacitance | 24 in. Dia. x 30 in. Length<br>304L SS | **24590-BOF**<br>-M6-DEP-00009002 |
| DEP-SUMP-00005A<br>E-0106 | ~58 | RF Capacitance | 24 in. Dia. x 30 in. Length<br>304L SS | **24590-BOF**<br>-M6-DEP-00009005 |
| DEP-SUMP-00005B<br>E-0106 | ~58 | RF Capacitance | 24 in. Dia. x 30 in. Length<br>304L SS | **24590-BOF**<br>-M6-DEP-00009005 |
| **Leak Detection Boxes** | | | | |
| DEP-LDB-00001<br>ED-B001 | ~7 | Conductivity Switch | 8 in. Dia. x 41 in. Length<br>316L SS | **24590-BOF**<br>-M6-DEP-00011001 |
| DEP-LDB-00002<br>ED-B001 | ~7 | | 8 in. Dia. x 41 in. Length<br>316L SS | **24590-BOF** |

| | | | | | |
|---|---|---|---|---|---|
| | | Conductivity Switch | | | -M6-DEP-00011001 |
| DEP-LDB-00003<br>ED-B001 | ~7 | Conductivity Switch | 8 in. Dia. x 41 in. Length<br>316L SS | | **24590-BOF**<br>-M6-DEP-00011001 |
| DEP-LDB-00004<br>ED-B001 | ~7 | Conductivity Switch | 8 in. Dia. x 41 in. Length<br>316L SS | | **24590-BOF**<br>-M6-DEP-00011001 |
| DEP-LDB-00005<br>ED-B001 | ~7 | Conductivity Switch | 8 in. Dia. x 41 in. Length<br>316L SS | | **24590-BOF**<br>-M6-DEP-00011001 |
| DEP-LDB-00006<br>ED-B001 | ~7 | Conductivity Switch | 8 in. Dia. x 41 in. Length<br>316L SS | | **24590-BOF**<br>-M6-DEP-00011001 |
| **Drain Lines** | | | | | |
| BOF-DEP-ZS-20282-W11A-011/02-01<br>ED-CH01 | NA | NA | 4 in. Dia.<br>316L SS | Containment pipe | **24590-BOF**<br>-M6-DEP-00001001 |
| | | | 1 ½ in. Dia.<br>AL6XN | Process pipe | |
| BOF-DEP-ZS-20236-W31A-02-01<br>ED-CH01 | NA | NA | 4 in. Dia.<br>Carbon Steel | Containment pipe | **24590-BOF**<br>-M6-DEP-00001001 |
| | | | 2 in. Dia.<br>316L SS | Process pipe | |
| BOF-DEP-ZS-20245 -W11A-04-01ED-CH01 | NA | NA | 6 in. Dia.<br>3166 SS | Containment pipe | **24590-BOF**<br>-M6-DEP-00001001 |
| | | | 4 in. Dia.<br>AL6XN | Process pipe | |
| BOF-DEP-ZS-20231-W31A-03-01<br>ED-CH01 | NA | NA | 6 in. Dia.<br>Carbon Steel | Containment pipe | **24590-BOF**<br>-M6-DEP-00001001 |
| | | | 3 in. Dia.<br>316L SS | Process pipe | |
| BOF-DEP-ZS-20242-W31A-10-01<br>ED-CH01 | NA | NA | 14 in. Dia.<br>Carbon Steel | Containment pipe | **24590-BOF**<br>-M6-DEP-00001001 |
| | | | 10 in. Dia.<br>316L SS | Process pipe | |
| BOF-DEP-ZS-20249-W31A-03-01<br>ED-CH01 | NA | NA | 6 in. Dia.<br>Carbon Steel | Containment pipe | **24590-BOF**<br>-M6-DEP-00001001 |
| | | | 3 in. Dia.<br>316L SS | Process pipe | |
| | NA | NA | 4 in. Dia.<br>Carbon steel | Containment pipe | **24590-BOF** |

| | | | | | |
|---|---|---|---|---|---|
| BOF-DEP-ZS-20225-W31A-02-01<br>ED-CH01 | | | 2 in. Dia.<br>316L SS | Process<br>pipe | -M6-DEP-00001002 |
| BOF-DEP-ZS-20219-W31A-02-01<br>ED-CH01 | NA | NA | 4 in. Dia.<br>Carbon steel | Containment<br>pipe | **24590-BOF**<br>-M6-DEP-00001002 |
| | | | 2 in. Dia.<br>316L SS | Process<br>pipe | |
| BOF-DEP-ZS-20222-W31A-02-01<br>ED-CH01 | NA | NA | 4 in. Dia.<br>Carbon Steel | Containment<br>pipe | **24590-BOF**<br>-M6-DEP-00001002 |
| | | | 2 in. Dia<br>316L SS. | Process<br>pipe | |
| BOF-DEP-ZS-20252-W11A-03-01<br>ED-CH01 | NA | NA | 6 in. Dia.<br>316L SS | Containment<br>pipe | **24590-BOF**<br>-M6-DEP-00010001 |
| | | | 3 in. Dia.<br>AL6XN | Process<br>pipe | |
| BOF-DEP-ZS-20265-W31A-03-01<br>ED-CH01 | NA | NA | 6 in. Dia.<br>Carbon Steel | Containment<br>Pipe | **24590-BOF**<br>-M6-DEP-00002006 |
| | | | 3 in. Dia.<br>316L SS | Process<br>pipe | |
| BOF-DEP-ZY-00181-W31A-03-01<br>ED-CH01 | NA | NA | 6 in. Dia.<br>Carbon Steel | Containment<br>Pipe | **24590-BOF**<br>-M6-DEP-00001001 |
| | | | 3 in. Dia.<br>316L SS | Process<br>pipe | |
| BOF-DEP-WU-00008-W31A-03-01<br>ED-CH01 | NA | NA | 6 in. Dia.<br>Carbon steel | Containment<br>pipe | **24590-BOF**<br>-M6-DEP-00001001 |
| | | | 3 in. Dia.<br>316L SS | Process<br>pipe | |
| BOF-DVP-GV-00026-W31A-03-01<br>ED-CH01 | NA | NA | 6 in. Dia.<br>Carbon steel | Containment<br>Pipe | **24590-BOF**<br>-M6-DEP-00001001 |
| | | | 3 in. Dia.<br>316L SS | Process<br>pipe | |

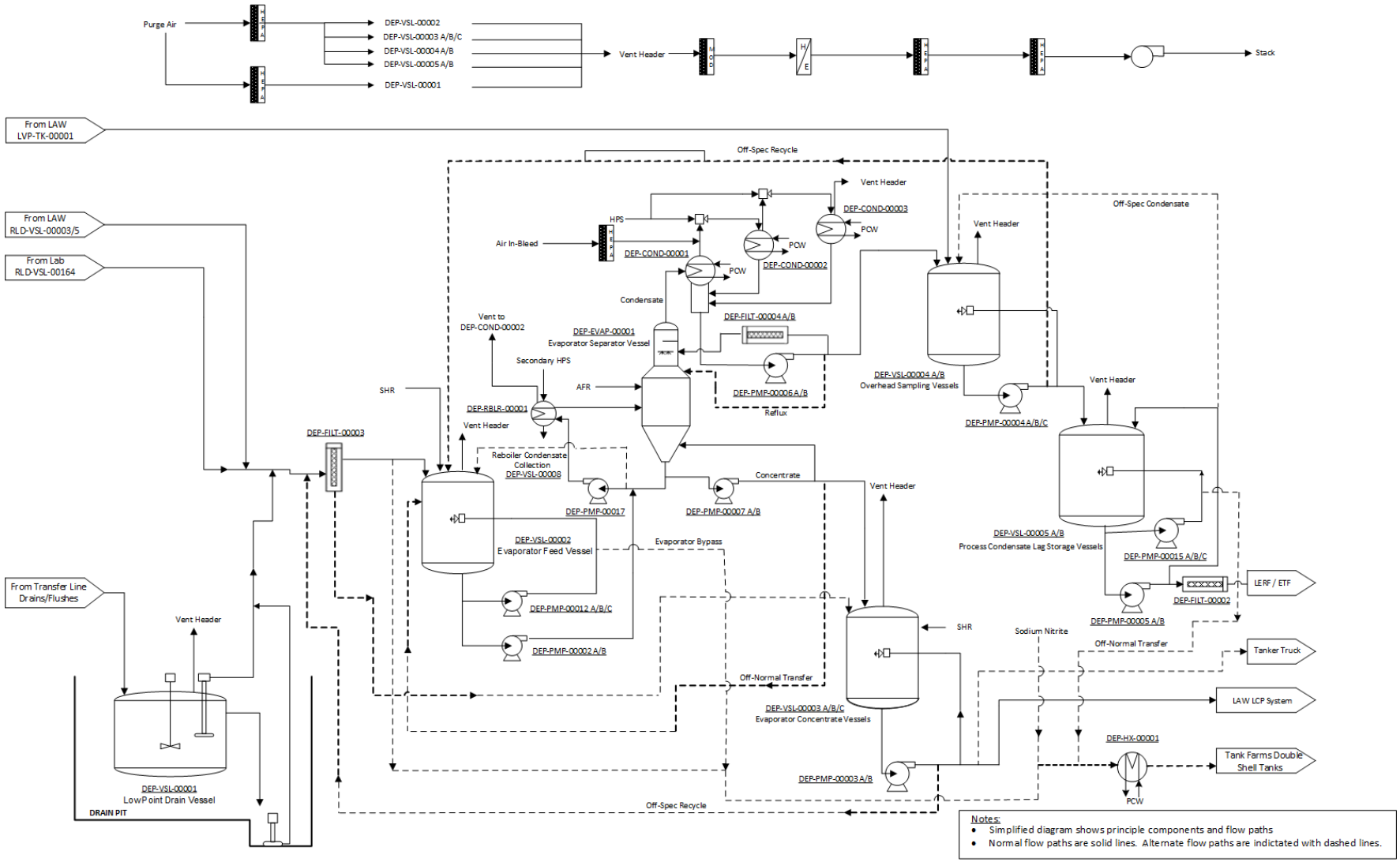


**Figure 4G-1 Effluent Management Facility Process Flow**

This page intentionally left blank.

# WASTE TREATMENT AND IMMOBILIZATION PLANT
# CHAPTER 4H
# ANALYTICAL LABORATORY (LAB)

## CHANGE CONTROL LOG

Change Control Logs ensure that changes to this unit are performed in a methodical, controlled, coordinated, and transparent manner. Each unit addendum will have its own change control log with a modification history table. The "**Modification Number**" represents Ecology's method for tracking the different versions of the permit. This log will serve as an up to date record of modifications and version history of the unit.

Modification History Table

| Modification Date | Modification Number |
|---|---|
| 09/05/2017 | 8C.2017.6F |
| 12/15/2016 | 8C.2016.Q3 |
| | |

This page intentionally left blank.

# CHAPTER 4H
# ANALYTICAL LABORATORY (LAB)

This page intentionally left blank.

# CHAPTER 4H
# ANALYTICAL LABORATORY (LAB)

## TABLE OF CONTENTS

4H Analytical Laboratory (Lab) ..... 5
4H.1 Containers ..... 11
4H.1.1 Description of Containers ..... 12
4H.1.2 Container Management Practices ..... 12
4H.1.3 Container Labeling ..... 14
4H.1.4 Containment Requirements for Storing Waste ..... 14
4H.1.5 Prevention of Reaction of Ignitable, Reactive, and Incompatible Wastes in Containers ..... 17
4H.2 Tank Systems ..... 17
4H.2.1 Radioactive Liquid Waste Disposal (RLD) System ..... 17
4H.2.2 Autosampling System (ASX) ..... 18
4H.3 Air Emission Control ..... 20
4H.4 Laboratory Maintenance ..... 20
4H.5 Solid Waste Management ..... 21
4H.5.1 Hotcell Solid Waste Management ..... 21
4H.5.2 Container Storage Area for the Analytical Laboratory ..... 22

## TABLES

Table 4H-1 Analytical Laboratory Tank Systems ..... 23
Table 4H-2 Analytical Laboratory Tank Systems Secondary Containment Areas ..... 24
Table 4H-3 Analytical Laboratory Sumps, Leak Detection Boxes, and Floor Drains/Lines ..... 25
Table 4H-4 Analytical Laboratory Container Storage Areas ..... 27

This page intentionally left blank.

## 4H Analytical Laboratory (Lab)

The Analytical Laboratory (Lab) is designed to incorporate the features and capability necessary to ensure efficient Hanford Tank Waste Treatment and Immobilization Plant (WTP) operations and meet permitting, process control, authorization basis, and waste form qualification requirements. The Lab is designed for "24/7" - 365 days per year operation to support peak throughput for each WTP facility. The Lab is a process support facility. The Resource Conservation and Recovery Act (RCRA) permitted portion of the Lab include the Radioactive Liquid Waste Disposal (RLD) tank system (tank and ancillary equipment) and the container storage areas. The Lab will also include satellite accumulation areas for the accumulation of secondary wastes generated by laboratory activities. Barcode readers and computer workstations are provided in designated areas to input and retrieve data from the laboratory information management system (LIMS).

The workstations will be logically segregated to provide a degree of isolation from possible cross contamination that could reduce the validity of the analytical results. This isolation will be a design consideration. Isolation is also provided to enhance the ability of the laboratory to function even when a room or workstation is nonfunctioning. Redundant capabilities will be provided, as appropriate, to mitigate contamination incidents to maintain required support to the processes when one system fails.

Samples prepared within the Lab may be sent to off-site facilities for analysis. The sample(s) are packaged according to the dose rate and destination in "strong tight containers" or shielded shipping containers. The day the shipment is scheduled to be made, the packaged sample will be surveyed for final radiological release, shipping papers including chain-of-custody forms will be verified for completion, and transferred with the shipment package.

The laboratory design will be validated with information from tank utilization modeling of the process tanks and operational research modeling of the treatment process, as appropriate. General arrangement drawings 24590-LAB-P1-60-00007 and -00008 in Dangerous Waste Permit (DWP) Operating Group 10, Appendix 11.4 provide a general layout of the 0'-0" and -19'-2" elevations of the Lab where analytical, maintenance, administrative, and waste management activities take place. The following attributes are outlined in the facility design figures described above:

- Workstations have been defined as required by the sampling and analysis plan for WTP process control and waste form qualification.
- Capability to provide limited process technology will be provided.
- Contamination controls have been incorporated for reliability of laboratory service to the WTP processes.
- Management of samples for off-site analysis by an outsource laboratory including feed receipt samples.

Drawings and other documents, found in DWP Operating Group10, Appendix 11.0 provide additional detail for the Lab:

- General arrangement drawings showing locations of tank systems, secondary waste management, and analytical laboratory activities.
- Process flow diagrams for process information.
- Piping and instrumentation diagrams (P&IDs), mechanical drawings, typical system figures depicting the analytical laboratory tank system and ancillary equipment.

The Lab contains both high-activity and low-activity laboratories. High-activity samples will be managed in the analytical hotcell laboratory (AHL). Low-activity samples will be managed and analyzed in the analytical radiological laboratory (ARL). The ARL also includes a sample receiving/shipping area designed to manage the inflow of manually transported samples.

The AHL will operate in the Baseline configuration. Associated hotcell laboratories, tank systems, and ventilation systems, will be isolated in the Direct Feed Low-Activity Waste (DFLAW) configuration, and will not operate until Pretreatment operations begin.

The facility is also being designed to coordinate the management of samples that will be outsourced and analyzed at off-site laboratories. Outsource laboratories will be used to analyze the majority of very low-activity samples such as water quality and air emission samples. Outsource laboratories will also be used to analyze double shell tank (DST) system unit characterization samples. Analytical methods and equipment selected to support laboratory analyses will be in accordance with applicable requirements. A LIMS network is provided to track and maintain an inventory of samples, reagents, and materials in the Lab area including sample analyses and data collection. In addition, the Lab includes waste drum management, maintenance, and support areas for facility operation.

The second floor of the Lab will be dedicated to the mechanical room, which will contain the C1 and C2 air handling units.

The RLD system vessels are located at approximately 19 ft below grade. Table 4H-1 lists current tank design information (capacity, materials of construction, and dimensions). Tank systems that manage liquid mixed or dangerous waste are provided with secondary containments. Table 4H-2 summarizes the secondary containment rooms/areas and calculated minimum liner heights. Sumps, leak detection boxes, and secondary containment drain systems are listed in Table 4H-3.

Samples will be transported to the Lab in two ways. The majority of samples will be collected and transported from the processing facilities via the autosampling system (ASX). Samples will be collected in a sample bottle or vial and transferred into a sample carrier. High-activity samples from the Pretreatment Facility (PTF) and High-Level Waste (HLW) vitrification facility will be pneumatically transferred to the hotcell sample receipt area through a dedicated transfer system for high-activity samples. Low-activity samples from the Low-Activity Waste (LAW) vitrification facility will be transferred directly to the sample receipt laboratory area through a dedicated low-activity transfer system. Effluent management Facility (EMF) samples and a small percentage of samples from other facilities will be transported to the laboratory manually in appropriately shielded transportation casks or containers.

## General Description of the Analytical Radiological Laboratory (ARL)

The ARL is one of the two analytical areas contained within the Lab. The ARL consists of thirteen laboratories commonly referred to as Rad Labs and is designed to operate during both the Baseline and DFLAW configurations. The other area is the AHL. The AHL will only operate in the Baseline configuration.

Laboratory areas manage dangerous and/or mixed waste in Satellite Accumulation Areas (SAAs) and 90-Day Accumulation Areas pursuant to the generator requirements [WAC 173-303-200]. Organic liquids will be segregated and managed as Lab Packs; other liquid wastes will be transferred to RLD Vessels to be returned back into the WTP process.

The ARL is designed to support the preparation and analysis of low-activity mixed waste samples. The Labs also support the analyses of samples diluted, digested, and prepared in the hotcell facility. Samples will be manually transferred from the hotcell facility to the ARL. The ARL will be capable of receiving these low-activity samples transferred from the process facilities via the ASX as well as manually transported low-activity samples from the process facilities. Equipment used in the preparation of samples for analyses will be located inside the fume hoods vented to the C3 ventilation system. All analyses except counting will be completed with equipment located in ventilation hoods. Barcode readers and computer workstations are provided in designated areas to input and retrieve data from the LIMS.

The ARL includes utilities and equipment required to support activities such as:

- Sample receipt and (manual) transport
- Dissolution/dilution
- Distillation/titration
- Standard/reagent preparation
- X-ray fluorescence spectrometry (XRF)
- Fourier transformation infrared spectrometry (FT-IR)
- Total Inorganic Carbon/Total Organic Carbon analyses (TIC/TOC)
- Analyses of elements and anions
- Ultraviolet and visible spectroscopy
- Preparation of samples for elemental analysis
- General physical properties analysis
- Radionuclide separation and counting
- Management of outsourced samples
- Satellite accumulation areas for secondary wastes

**Sample Receipt Laboratory (RL-1)**

The Sample Receipt Laboratory will serve as the sample receipt and staging area for the ARL. This laboratory will be provided with hoods for sample receipt, inspection/evaluation, sample staging, and transfers. RL-1 will also contain four shielded cabinets each ventilated to the C3 ventilation system, and refrigerators for storage of samples requiring sample preservation. Sample preparations are completed with equipment located in hoods vented to the C3 ventilation system.

**Dissolution/Dilution Lab (RL-2)**

The Dissolution/Dilution Lab supports general wet chemistry activities including the preparation of samples for analyses that will be performed in the other Rad Labs. RL-2 will house instrumentation and supplies to support a variety of sample preparation techniques. The two primary sample preparation methods to be performed in RL-2 are microwave-assisted acid dissolution and fusion dissolution. Sample preparations are completed with equipment located in hoods vented to the C3 ventilation system.

**Distillation/Titration Lab (RL-3)**

The Distillation/Titration Lab provides sample preparation including distillation, titration, and physical measurements of samples. Sample preparation performed in this laboratory involves determining the aliquot or sub-sample weight, measurement of the specific gravity/density of sample solutions, and acid and base titrations. Sample preparations are completed with equipment located in hoods vented to the C3 ventilation system.

**Standard/Reagent Preparation Laboratory (RL-4)**

The Standard/Reagent Preparation Laboratory provides for prepared standards and reagents prior to their distribution to the other laboratories. Sources used for infrequent calibration of counting equipment will be stored in this laboratory. Sample preparations are completed with equipment located in hoods vented to the C3 ventilation system.

**X-ray Laboratory (RL-5)**

The X-ray Laboratory is used for quantifying elemental concentrations utilizing the X-ray Fluorescence (XRF) system. Optical microscopes are used for qualitatively identifying crystals as needed during process troubleshooting. Analyses are completed with equipment located in hoods vented to the C3 ventilation system.

**Instrument Laboratory (RL-6)**

The Instrument Laboratory supports unique functions associated with non-routine analyses. These functions include sample preparation and analysis functions such as the preparation of KBr pellets, preparation of dilutions and reagents for Ultraviolet-visible spectrophotometry, FT-IR Spectrometry for the quantitation of compounds in liquid, gas, or solid phases, and UV/VIS spectrometry for quantitation of compounds in liquids. Analyses and sample preparations are completed with equipment located in hoods vented to the C3 ventilation system.

**Process Technology Laboratory (RL-7)**

The Process Technology Laboratory provides non-routine measurement of physical characteristics of low-activity process samples and process tests. This laboratory is used for differential scanning calorimeter/thermal gravimetric analysis (DSC/TGA), particle size analysis, and rheology and pH measurements. Analysis and testing are completed with equipment located in hoods vented to the C3 ventilation system.

**Process Technology Laboratory (RL-8)**

The Process Technology Laboratory provides testing on laboratory scale equipment to observe the behavior of low-activity materials during processing through a process unit operation and to define anomalies to routine processing. All analyses are completed with equipment located in hoods vented to the C3 ventilation system.

**Elemental Analysis Laboratories (RL-9 and RL-9A)**

The Elemental Analysis Laboratories are used for the preparation and analysis of medium level radioactive samples using an inductively coupled plasma/atomic emission spectrometer (ICP/AES) instrument for the analysis of elements, inductively coupled plasma/mass spectrometer (ICP/MS) instrument for the analysis of elements and specific radionuclides, and mercury analyzer for the analysis of mercury. The Elemental Analysis Laboratory RL-9A is a duplicate of Elemental Analysis Laboratory RL-9; RL-9A is a backup to RL-9. The space is available for the setup of process development evaluations. All analyses are completed with equipment located in hoods vented to the C3 ventilation system.

**General Chemistry Lab (RL-10)**

The General Chemistry Lab is used to prepare and analyze samples using the Ion Chromatography (IC) for analysis of selected anions and organic acids, and the Total Carbon analyzer for total inorganic carbon, and total organic carbon (TIC/TOC) analysis. RL-10 equipment is split such that instrument electronics are on benches adjacent to fume hoods and the components for sample contact are inside hoods vented to the C3 ventilation system.

**Rad Preparation Laboratories (RL-11 and RL-12)**

The Rad Preparation Laboratories are used for sample preparation and separation of various radionuclides for analysis by nuclear spectroscopy (counting). Both of the laboratories will be identical in size and will have the capability to provide limited redundancy or both labs can be used to provide additional capacity. All analyses are completed with equipment located in hoods vented to the C3 ventilation system.

**Rad Counting Laboratory (RL-13)**

The Rad Counting Laboratory is used for analyzing prepared samples, standards, and control sources. This laboratory will accommodate instrumentation for measurements of alpha, beta, and gamma radiation in samples transferred from the Rad Preparation Laboratories RL-11 and RL-12. There will be no hoods, water distribution, or sinks in this room. Samples will be manually transported on a cart from the Rad Preparation Laboratories. Shielded storage areas will be provided for temporary staging of samples, calibration and control check sources. Analyses will be completed using gamma spectrometer systems,

gas-flow proportional counters for gross alpha/beta analysis, alpha spectroscopy multi-detector systems, and liquid scintillation counting systems for beta analysis.

**Sample Shipping and Receiving Area (Rm A-0141F)**

The Sample Shipping and Receiving Area is located adjacent to the primary airlock and is used for receiving manually delivered samples. This room will provide space for loading casks for off-site transport of samples as required. This room will also provide an area with low contamination potential and reduces the need for decontamination of casks and containers for off-site radiological release. This area provides equipment to receive and transfer samples, chain of custody, staging for shipment to off-site facilities, and transfer to RL-1 or into the Sample Receipt Hotcell (HC-1) if the radioactivity level is determined to require shielding. A fume hood is provided to support sample receipt, packaging, and preparation for shipment.

If the sample is to be shipped to another facility, the sample will be placed on shelving or in the refrigerator awaiting shipping. If a sample originating in the Lab is to be shipped to another laboratory, the exterior of the sample container will be decontaminated and brought to this location for staging for shipment.

## General Description of the Analytical Hotcell Laboratory (AHL)

In the Baseline configuration process samples from the WTP PTF and HLW facility taken by the ASX are delivered to the Hotcell Receipt Station (HCRS) by a pneumatic transfer system. Samples from outside the WTP that require shielding are delivered to the hotcell in shielded sample carriers called pigs. Barcode readers are provided in each hotcell and a computer workstation is provided to input and retrieve data from the LIMS. A trolley is provided for inter-cell transfers of samples and smaller equipment items. A monorail is provided to move large equipment. Each hotcell is provided with an appropriate number of master slave manipulators (MSMs) to accomplish in-cell tasks remotely. The equipment used to perform the functions described in the following sections is representative of typical activities for safely performing operations on highly radioactive samples.

The AHL consists of 14 hotcells (HC), one hood assembly, and three glovebox assemblies adjoining the hotcell structure. The facility includes equipment in Hotcells 1 through 14 with the Hotcell 14 functioning as the secondary waste management area, and a more detailed description of Hotcell 14 waste management activities is provided in Section 4H.5, Solid Waste Management. Gloveboxes adjoining HC-12 and HC-13 will house the ICP/AES and ICP/MS instruments.

Samples will be moved into and between the hotcells using the trolley or monorail. Ventilation flow from the hotcell area, including the waste cell, will be routed to the C5 High Efficiency Particulate Air (HEPA) filtration system.

**Sample Receipt (HC-1)**

The Sample Receipt Hotcell is located at the north end of the series of analytical hotcells. One glovebox assembly on HC-1 will be used to transfer samples and material out of the hotcells. One hood assembly on HC-1 will be used to introduce manually drawn samples into HC-1. This hotcell is outfitted with four MSM arms (two pairs) on the east and west sides to provide full floor coverage. The HCRS on top of HC-1 provides for the delivery of samples from the ASX. The mechanical de-capping of sample bottles, transferring samples to transparent container, and capping with a screw-type lid is performed in HC-1. HC-1 also provides radiation dose rate probe and meter to estimate the radiation level of both incoming and outgoing samples, pH meter for measurement of samples, and a barcode reader (or similar device) to identify and track sample containers.

The ASX HCRS is located on top of HC-1. The sample carrier will be delivered from an HLW or PTF ASX sampler to the HCRS. The HCRS will remove the sample bottle from the carrier utilizing robotics and place it in a chute attached to HC-1.

**Sample Preparation (HC-2 and HC-3)**

The Sample Preparation Hotcells are located south of the sample receiving hotcell and each hotcell will be outfitted with two MSMs. Activities carried out in these hotcells include the generation of individual sample aliquots using sample homogenizer, electronic scales, centrifuge, filtration, stirring, and desiccators. Individual sample aliquots are then transferred to other hotcells for further analysis.

**Limited Process Technology (HC-4)**

The limited process technology hotcell provides space for the evaluation of anomalies occurring in the processing facilities such as potential plugging of ultrafilters, ion exchange malfunction and material foaming, etc. This hotcell may also be used to prepare coupons for analyses in hotcells 12 and 13. This cell has one pair of MSMs and necessary sample preparation equipment (furnaces, drying ovens, balances, etc.) to complete process testing.

**Physical Properties (HC-5)**

The physical properties hotcell provides space for measurements such as rheology, solids, and particle size measurements to support process operations. This hotcell is provided with a pair of MSMs, and necessary sample preparation equipment (furnaces, drying ovens, balances, etc.) to complete process testing.

**Dissolution and Dilution Hotcells (HC-6 and HC-7)**

The dissolution and dilution hotcells will be used to perform thermal-assisted acid digestion and alkali fusion dissolutions of WTP process samples. Each hotcell contains a pair of MSMs and work surface for dissolving slurry feed samples (such as from the melter feed preparation vessels) and glass shards. The equipment used to prepare samples in the dissolution/dilution hotcells includes microwave and/or convection ovens and accessories for heating and testing sample mixtures such as furnaces, drying ovens, balances, pH meters.

**Radionuclide Preparation Hotcells (HC-8 and HC-9)**

The radionuclide preparation hotcells will be used to separate radionuclides for further isolation and also to reduce the radiological dose rate of samples for export from the hotcells for counting and analyses in ARL. The equipment required to prepare samples consists of small pre-packed ion exchange columns and other support equipment such as balances and glassware.

**Ion Chromatography (IC) and Total Inorganic Carbon (TIC)/Total Organic Carbon (TOC) Preparation (HC-10)**

The Ion Chromatography and Total Inorganic and Organic Carbon Preparation hotcell is used to prepare samples for IC or TIC/TOC analyses in the ARL. Liquid samples for anion and TIC/TOC analyses are diluted and transferred to the Rad Lab. Solids are digested, diluted, and transferred to the Rad Lab for analyses. This preparation is needed to reduce dose rates to an acceptable level for analysis in Rad Labs. The equipment required to prepare samples consists of containers for performing water digestions, volumetric flasks and pipettes for diluting the samples and addition of control reagents, and filtration apparatus and vacuums for assisting in sample filtration.

**Boildown and Physical Properties (HC-11)**

This hotcell will provide the capability to determine the volume reduction of sample material achievable before solids form, to test the compatibility of different waste types and to develop analytical methods. The hotcell will be outfitted with the general equipment capabilities. Equipment required to prepare and/or test samples will include stirrers to homogenize sample materials, vessels to composite samples, and filtration systems to separate solids from liquids.

**ICP Preparation and Analyses (HC-12 and HC-13)**

The ICP Preparation and Analysis hotcell receives samples prepared in hotcells 2, 3, 4, 6 & 7. These hotcells will receive samples previously diluted in the sample preparation hotcells (HC-2 and HC-3) or made into coupons in Limited Process Technology hotcell (HC-4) or from the dissolution/dilution hotcells (HC-6 and HC-7). A glovebox approximately 4 feet (ft) by 4 ft will be attached perpendicular to the exterior of each hotcell. An ICP/AES and an ICP/MS will be integrated with the gloveboxes at hotcells 13 and 14. Equipment necessary to prepare and/or analyze samples in HC-12 and HC-13 will include:

- Volumetric glassware to perform sample dilutions.
- Pipettes to add spikes and reagents to samples.
- Stirrers to homogenize solutions.
- Analytical balance to perform dilutions by weight.
- Attached glovebox exterior to the hotcell.
- ICP/AES instrument integrated with the glovebox.
- ICP/MS instrument integrated with the glovebox.
- Laser system to ablate particulates from the surface of a prepared glass coupon.
- Sample positioning and focusing system to properly ablate glass particulates.
- Optical viewing system to observe and align area of the glass coupon for ablation.

**Hotcell Solid Waste Management (HC-14)**

Mixed and dangerous solid waste will be accumulated within the hotcells in SAAs and periodically placed in waste drums. Solid waste management in the hotcell will require remote handling. Waste from the SAAs which is ready to be removed from the hotcells is transferred to HC-14 where it can be removed from the hotcells into awaiting waste drum(s). Details about secondary waste management in the Hotcell Solid Waste Management area is provided in Section 4H.5.1. Liquid waste along with unused sample portions can be disposed of directly to the RLD system via hotcell drains.

## 4H.1 Containers

This section identifies the containers and container management practices that will be followed at the Lab. The term “container” is used as defined in Washington Administrative Code (WAC) 173-303-040. Note that in this chapter and throughout the permit, terms other than containers may be used, such as canisters, boxes, bins, flasks, casks, and overpacks.

The container storage area (secondary waste) located within the Lab consists of the following rooms:

- Waste Drum Management Room (A-0139)
- Lab Pack Room (A-0139A)
- Airlock (A-0139B)
- Volume Reduction Room (A-0139C)
- Airlock/Clean Drum Export Room (A-0139D)

Container storage area dimensions at the Lab are summarized in Table 4H-4.

The following sections address waste management containers:

- Description of Containers - Section 4H.1.1
- Container Management Practices - Section 4H.1.2
- Container Labeling - Section 4H.1.3
- Containment Requirements for Storing Waste - Section 4H.1.4
- Prevention of Ignitable, Reactive, and Incompatible Wastes in Containers - Section 4H.1.5

### 4H.1.1 Description of Containers

These types of waste will be managed in containers:

- Miscellaneous mixed waste (secondary waste)
- Miscellaneous nonradioactive dangerous waste (secondary waste)

The waste form dictates the type of containers used for waste management. The following paragraphs describe these types of containerized waste that are managed at the Lab.

#### Miscellaneous Mixed Waste

Generally, miscellaneous mixed wastes are secondary wastes that may include, but are not limited to, the following items:

- Spent or failed equipment
- HVAC HEPA filters
- Analytical laboratory waste

Spent equipment and offgas filters will typically be managed in commercially-available containers such as steel drums or steel boxes, of varying size. The containers for miscellaneous mixed waste will comply with transportation requirements, with receiving treatment, storage, and disposal (TSD) facility waste acceptance criteria, and will be compatible with the miscellaneous mixed waste. These containers may or may not include a liner. Final container selection, container and waste compatibility, and the need for liners, will be based on the physical, chemical, and radiological properties of the waste being managed.

Each miscellaneous mixed waste container will have associated documentation that describes the contents, such as waste type, physical and chemical characterization, and radiological characterization. This information will be retained within the plant information network.

Most miscellaneous secondary mixed wastes will be spent equipment and consumables such as pumps, air lances, HEPA filters, etc., and are not expected to contain liquids. If wastes are generated that contain small quantities of liquids, absorbent products will be added to absorb liquids, to comply with the receiving TSD facility waste acceptance criteria. In addition, the analytical laboratory will generate containerized liquid waste (Lab Packs).

#### Miscellaneous Nonradioactive Dangerous Waste

Each nonradioactive dangerous waste container will have associated documentation that describes the contents, such as waste type and physical and chemical characterization. Typically, commercially available containers will be used. The types of containers used for packaging nonradioactive dangerous waste will comply with the receiving TSD facility waste acceptance criteria and transportation requirements. However, final container selection, container and waste compatibility, and the need for liners will be based on the physical and chemical properties of the waste being managed.

### 4H.1.2 Container Management Practices

The following paragraphs describe how each of the containers used at the Lab are managed.

#### 4H.1.2.1 Miscellaneous Mixed Waste and Miscellaneous Nonradioactive Dangerous Waste Containers

Miscellaneous Mixed Waste Containers

Miscellaneous mixed waste (secondary waste) will be managed in:

- Laboratory waste management area (A-0139 and A-0139A/B/C/D)

Containers will be kept closed unless waste is being added, removed, or sampled while in the containment storage areas. Containers stored in these areas will be placed on pallets, or otherwise elevated to prevent contact with liquid, if present. Table 4H-4 summarizes the dimensions and maximum capacity of miscellaneous mixed waste storage areas. Containers will be managed in designated areas throughout the Lab, and then transferred to a suitable TSD facility.

The laboratory waste management area (A-0139 and A-0139A/B/C/D) will be located in the southern portion on the 0 ft elevation of the Lab. The unit will be used for storage of miscellaneous waste containers prior to disposition to a receiving TSD facility. The aisle space will be 30 inches (in.) and waste containers may or may not be stacked. This unit's storage capacity is listed in Table 4H-4.

Miscellaneous Nonradioactive Dangerous Waste Containers

Miscellaneous dangerous waste containers will typically be managed in non-permitted waste management units (SAAs and less-than-90-day storage areas) located throughout the Lab. Containers will be kept closed unless waste is being added, removed, or sampled. They will routinely be moved by forklift or drum cart, and will be managed in a manner that prevents ruptures and leaks.

#### 4H.1.2.2 Waste Tracking

The plant information network interfaces with the integrated control network and is designed to collect and maintain plant information. The plant information network is currently planned to include the following systems (all systems used at the plants/facilities and balance of facilities are provided for information only):

- Plant data warehouse and reporting system
- Laboratory information management system
- Waste tracking and inventory system

Inventory and Batch Tracking

The waste tracking and inventory system will interface with the information system data historian to provide reporting information such as tank volumes, waste characteristics, and facility inventories of process waste. The waste tracking system will also be used to query operations parameters at any time information is needed, as specified by operations, to manage the process system.

Secondary Waste Stream Tracking

Containerized secondary waste streams and equipment will be tracked and managed through commercially available database management software. Containers will be mapped in each plant and updated during the inspection process using a commercially available drawing software application.

Laboratory Information Management System

The LIMS will be an integral feature of the plant information network. The LIMS will serve as an essential tool for providing data management of regulatory and processing samples. The chosen LIMS will be a commercial off-the-shelf software package designed for performing laboratory information management tasks as described in American Society for Testing and Materials E1578-93, *Standard Guide for Laboratory Information Management Systems (LIMS)*.

The LIMS will track the flow of samples through the laboratory. Samples received in the laboratory will be identified with a unique identification label. The identification label provides details of the sample process stream. Baseline analyses are defined by the requesting plant. Additional analyses, as required, will be input into LIMS by laboratory analysts. Data will be input into LIMS manually or by data transfer using LIMS/instrument interface. Analyses will be performed using approved and validated analytical procedures.

Analytical results will be compiled by the LIMS and held pending checking and approval by appropriate staff. Approved results will be reported to the requesting plant.

### 4H.1.3 Container Labeling

Miscellaneous Mixed Waste Containers

The miscellaneous mixed waste containers will be labeled with the accumulation or generation start date, as appropriate, the major risk(s) associated with the waste, and the words “hazardous waste” or “dangerous waste.” A waste tracking and inventory system will be implemented. Labels and markings will be positioned so that required information is visible. The label will meet the WAC 173-303-630(3) requirements, and the dangerous waste number will be clearly identified.

Miscellaneous Dangerous Waste Containers

The miscellaneous dangerous waste drums will be labeled with the accumulation or generation start date, as appropriate, the major risk(s) associated with the waste, and the words “hazardous waste” or “dangerous waste”. A waste tracking and inventory system will be implemented. Labels and markings will be positioned so that required information is visible. The label will meet the WAC 173-303-630(3) requirements, and the dangerous waste number will be clearly identified.

### 4H.1.4 Containment Requirements for Storing Waste

Secondary containment requirements for the waste are discussed below.

#### 4H.1.4.1 Secondary Containment System Design

Secondary containment is required for areas in which containers hold free liquids. It is also required for areas managing wastes exhibiting the characteristics of ignitability or reactivity as defined in WAC 173-303-090(5) and (7).

Miscellaneous Mixed Waste

Containers can be placed on portable secondary containment systems or elevated (e.g., pallets, skids), to protect the containers from contacting accumulated liquids. Waste that does not contain free liquids or is not ignitable or reactive does not require a containment device as stated in WAC 173-303-630(7)(c) since the areas are within a building and are protected from precipitation. Further documentation discussing how WTP meets the WAC and permit requirements for storage areas in the Lab are located in the operating record.

Miscellaneous Dangerous Waste

Containers can be placed on portable secondary containment systems or elevated (e.g., pallets, skids), to protect the containers from contacting accumulated liquids. Waste that does not contain free liquids or is not ignitable or reactive does not require a containment device as stated in WAC 173-303-630(7)(c) since the areas are within a building and are protected from precipitation. Further documentation discussing how WTP meets the WAC and permit requirements for storage areas in the Lab are located in the operating record.

#### 4H.1.4.2 System Design

The exterior walls of the waste management area (WMA) are constructed of reinforced concrete and the entire floor area is coated with a special protective coating. Coatings are provided to support the clean-up and decontamination of a potential spill and are not designed to provide secondary containment. The secondary containment requirement for containers containing liquid waste is met by using portable secondary containment pallets. The container storage areas in Rooms A-0139 and A-0139A, A-0139B, A-0139C, and A-0139D are not designed with containment systems as stated in WAC 173-303-630(7)(c) since the areas are within a building and protected from precipitation. Containers can be placed on portable secondary containment systems or elevated (e.g., pallets, skids), to protect the containers from contacting accumulated liquids. Waste that does not contain free liquids or is not ignitable or reactive does not require a containment device as stated in WAC 173-303-630(7)(c) since the areas are within a building and are protected from precipitation.

Miscellaneous Mixed Waste

There will be a miscellaneous mixed waste (secondary waste) container storage area at the Lab, as follows:

- Laboratory waste management area (A-0139 and A-0139A/B/C/D)
- Miscellaneous mixed waste containers can be placed on portable secondary containment systems or elevated (e.g., pallets, skids), to protect the containers from contacting accumulated liquids. Waste that does not contain free liquids or is not ignitable or reactive does not require a containment device as stated in WAC 173-303-630(7)(c) since the areas are within a building and are protected from precipitation. Further documentation discussing how WTP meets the WAC and permit requirements for storage areas in the Lab are located in the operating record.

Miscellaneous Dangerous Waste

- Miscellaneous dangerous waste containers can be placed on portable secondary containment systems or elevated (e.g., pallets, skids), to protect the containers from contacting accumulated liquids. Waste that does not contain free liquids or is not ignitable or reactive does not require a containment device as stated in WAC 173-303-630(7)(c) since the areas are within a building and are protected from precipitation. Further documentation discussing how WTP meets the WAC and permit requirements for storage areas in the Lab are located in the operating record.

#### 4H.1.4.3 Structural Integrity of the Base

The WMA floor is not designed nor intended to, provide secondary containment of materials. Therefore, no structural integrity assessment is required. Secondary containment is provided by commercially available portable secondary containment pallets/devices designed to contain 10% of the volume of all containers within the containment pallet, or the volume of the largest container, whichever is greater.

#### 4H.1.4.4 Containment System Capacity

Miscellaneous Mixed Waste

Liquid waste may be stored in the laboratory waste management area. Each container holding liquid dangerous waste will be placed into portable secondary containment that meets the requirements of WAC 173-303-630(7). The waste container will function as the primary containment while the portable containment device will function as the secondary containment.

Each portable secondary containment will have the capacity to contain 10% of the volume of all containers within the containment area, or the volume of the largest container, whichever is greater.

Miscellaneous Dangerous Waste

Each container holding liquid nonradioactive dangerous waste will be placed into portable secondary containment. The waste container will function as the primary containment while the portable secondary containment will function as the secondary containment.

Each portable secondary containment will have the capacity to contain 10% of the volume of all containers within the containment area, or the volume of the largest container, whichever is greater. Typically, the waste containers will be steel drums.

#### 4H.1.4.5 Control of Run-On

Miscellaneous Mixed Waste

Run-on will not reach the interior of the miscellaneous mixed waste storage areas, because they will be located within the Lab building which is provided with a grated precipitation collection trough located outside of the container storage area roll-up doors. Additionally, the building is provided with gutters to remove precipitation.

Miscellaneous Dangerous Waste

Run-on will not reach the interior of the miscellaneous dangerous waste storage areas, because the Lab building is provided with a grated precipitation collection trough located outside of the container storage area roll-up doors. Miscellaneous dangerous waste will be managed in buildings with walls and roof to remove precipitation.

#### 4H.1.4.6 Removal of Liquids from Containment System

Miscellaneous Mixed Waste

Portable secondary containment will be provided for individual containers that contain liquids. Hand pumps or similar devices will be used to remove liquid released to the portable secondary containments.

Miscellaneous Dangerous Waste

Portable secondary containment will be provided for individual containers that contain liquids. Hand pumps or similar devices will be used to remove liquid released to the portable secondary containments.

#### 4H.1.4.7 Demonstration that Containment is not Required because Containers do not Contain Free Liquids, Wastes that Exhibit Ignitability or Reactivity, or Wastes Designated F020-023, F026 or F027

Miscellaneous Mixed Waste

Liquids may be present in wastes in the laboratory waste management area. Secondary containment will be provided for individual containers that manage liquids. Wastes with the F020-F023, F026, and F027 numbers are not identified for the DST system. Therefore, these waste numbers will not be present at the Lab.

Miscellaneous Dangerous Waste

Secondary containment will be provided for individual containers that manage liquids. Wastes with the F020-F023, F026, and F027 numbers are not identified for the DST system. Therefore, these waste numbers will not be present at the Lab.

### 4H.1.5 Prevention of Reaction of Ignitable, Reactive, and Incompatible Wastes in Containers

Ignitable, Reactive, or Incompatible Miscellaneous Mixed Waste and Miscellaneous Dangerous Waste

The Lab generates and stores containers of dangerous or mixed waste exhibiting the characteristics of reactivity (D003) and ignitability (D001) as defined in WAC 173-303-090(5) and (7). Incompatible waste includes waste that is unsuitable for mixing with another waste or material because the mixture might produce heat or pressure, fire or explosion, violent reaction, toxic fumes, mists, or gases, or flammable fumes or gases. Proper precautions are taken to prevent any off-normal situations from occurring. Acids and bases are stored in flammable storage cabinets or on separate portable secondary containments; oxidizers are stored separately from combustible materials; and corrosive waste are stored on separate portable secondary containments or in flammable cabinets. These separate storage areas within the WMA are clearly marked with signs indicating the appropriate waste category. Incompatible waste containers are stored at least thirty inches apart.

Separate labpack containers are used, and other waste types are not packed with ignitable waste. Ignitable, reactive, or incompatible waste is separated from containers of other waste types in the WMA. Within the WMA, ignitable or reactive waste are placed on separate portable secondary containment systems, such as individual spill pallets. Personnel inspect the containers for proper packaging, marking, and waste information before transport. Potentially incompatible waste will be stored at least one aisle width (30”) apart.

## 4H.2 Tank Systems

### 4H.2.1 Radioactive Liquid Waste Disposal (RLD) System

The analytical laboratory RLD system is primarily composed of the following:

- Floor Drain Collection Vessel (RLD-VSL-00163)
- Laboratory Area Sink Collection Vessel (RLD-VSL-00164)
- Hotcell Drain Collection Vessel (RLD-VSL-00165)
- Associated ancillary equipment

The Floor Drain Collection Vessel (RLD-VSL-00163) collects, contains, and transfers noncontaminated liquid effluent. The floor drain collection vessel is identified as part of the RLD system. It is not designed or permitted to manage mixed or dangerous wastes. If a spill or release were to occur that contaminated this vessel, the vessel will be discharged to the Laboratory Area Sink Collection Vessel (RLD-VSL-00164) or the Hotcell Drain Collection Vessel (RLD-VSL-00165) and rinsed with water prior to being returned to service. This vessel collects effluent from radiological laboratory floor drains, eyewash, and safety shower equipment. The vessel also collects effluent from the C2 area floor drains located in areas such as the laboratory area corridors, hotcell bay area, and the filter room.

The laboratory area sink drain collection vessel (RLD-VSL-00164) is located in the C3 Effluent Vessel Cell under the C3 filter/fan room in the Lab. Aqueous liquid ARL waste consists of samples (unused and residues), dilutions, and dissolution aliquots prepared for analysis. Liquids will be partially neutralized to reduce corrosivity containers of aqueous liquids will be poured down ARL fume hood sink drains and flushed with a minimum of 0.5 gallon of flush water for each 40 milliliters (mL) of sample before they are discharged to the RLD-VSL-00164. While operating in the DFLAW configuration, the contents laboratory area sink drain collection vessel will be transferred to the EMF Direct Feed Effluent Transfer (DEP) system for evaporation and treatment prior to being returned to the LAW vitrification process, or treated at the Liquid Effluent Retention Facility/Effluent Treatment Facility (LERF/ETF). During cold commissioning, the vessel may discharge to a tanker truck.

After the PTF is brought on-line, while operating in the baseline configuration, the contents of the laboratory area sink drain collection vessel will be transferred to the hotcell drain collection vessel (RLD-VSL-00165). The contents of RLD-VSL-00165 are then transferred to the PTF for treatment in the PTF and HLW vitrification process or treated at the LERF/ETF.

In the Baseline configuration liquid waste management in the hotcell will require remote handling prior to disposal to the Hotcell Drain Collection Vessel (RLD-VSL-00165) from hotcell cup sink drains. Aqueous liquid AHL waste consists of samples (unused and residues), dilutions, and dissolution aliquots prepared for analysis. Liquids will be partially neutralized to reduce corrosivity before they are discharged to the liquid waste system. Containers of aqueous liquids for disposal are moved to and poured down hotcell cupsink drains using the MSMs along with a minimum of 0.5 gallon of flush water for each 20 milliliters (mL) of sample. Liquid waste information (including quantity of liquid waste per disposal and identification of the sample that generated the waste) for each of the Lab RLD vessels is updated in LIMS using the computer workstation.

### 4H.2.2 Autosampling System (ASX)

The ASX is considered one of the laboratory systems; however, it includes components in the other WTP facilities. The ASX includes the autosampling assemblies in each of the WTP chemical process facilities and the Pneumatic Transfer System (PTS) that transports samples between those facilities and the Lab and will only be operational in the Baseline configuration. Samples from the EMF will be manually transferred to the Lab. The ASX is a support system that collects and manages samples from each of the process facilities. The DWP regulates the secondary containment of sample feed and sample return process piping and sample line flush piping internal to the PTF, HLW, and LAW sampler as described in Section 4H.2.2.1, Autosampler Secondary Containment and Leak Detection Functions.

Four ASX samplers are located in the PTF, three are located in the HLW facility, and two are located in the LAW facility. Each sampler interfaces with the process systems that require sampling of their contents via a process sample pipe loop. The loop will deliver process waste for sample collection to the sampler and return the pumped fluid, minus the collected sample, to the vessel from which it originated.

The PTS is a network of transport tubes, diverters, exhausters, HEPA filters, and controlled arrival stations that work concurrently to transfer the carriers and sample bottles to and from the analytical laboratory. Low-activity samples are delivered to the Fumehood Receipt Station in the analytical laboratory. The HCRS is the analytical laboratory receipt station for HLW and PTF samples. The Autosampling Control System (ASJ) will control and monitor the ASX process.

For high-frequency sampling and for highly radioactive, medium activity and transuranic-bearing streams, the sampling process is automated. Manual sampling techniques are primarily reserved for low-activity, low frequency, and large volume sample applications, or where needle-sampling techniques are inappropriate.

The WTP sampling systems for high-activity (HA) and low-activity (LA) sampling are independent and segregated because of the requirements for handling the HA samples when they reach the Lab. Both the HA and LA sample lines will transfer only one sample carrier at a time. The HA sampling system collects and pneumatically transfers samples from the PTF and HLW facilities to the Lab Hotcell. The LA sample line transfers samples collected from the LAW facility directly to the radiological laboratory. Diverters will provide junction points that enable the sample carriers to be routed to and from destinations on the transfer line. Tracking switches along the transfer lines will be used to track sample carrier movement. In addition to the primary HA and LA sample lines, samples from the tank farms or other locations, and grab samples taken from WTP facilities, will be manually delivered to the Lab in shielded sample carriers.

Process liquids will be circulated through pipe lines into and out of the autosampler enclosures. Samples are collected by the ISOLOK® samplers located in these recirculation loops. A supply line isolation valve will secure the recirculation process upon completion of sampling.

The mechanical process for ASX sample collection will commence by dispatching a carrier and sample bottle from the storage/dispatch magazine in the Lab and receiving it at the sampler docking station. The robotic arm will interface with the carrier at the glovebox docking port to retrieve the empty sample bottle from the carrier. The robotic arm will drive the sample bottle on to the ISOLOK sample injection needle. The ISOLOK captures, retains, and injects a specific volume of process material into the sample bottle. The ISOLOK sampler uses a pneumatically driven plunger to "grab" a measured sample volume of flowing material with each extension and retraction. The quantity collected for a sample, then, will be determined by the number of strokes set for the sample drawn.

The robotic arm replaces the filled sample bottle into the carrier, at the glovebox docking port, and the carrier is then flown through the PTS flight tube back to the HA or LA Lab receipt station where the sample will be retrieved for analysis. The carrier will also contain any potential leakage in the event of sample bottle damage or malfunction.

In conjunction with this sample collection sequence, two seal tests are performed. The Arm Interspace Seal Test (AIST) occurs at the initiation of a sample sequence. It confirms that the robotic arm has an effective seal on the docking port. The Carrier Interspace Seal Test (CIST) is performed when the carrier has been sealed against the docking port. It confirms that both the robotic arm and the carrier are sealed against the docking port. The CIST occurs prior to lifting the robotic arm off the docking port. The seal tests are performed to ensure that air from the glovebox confinement cannot be drawn into the PTS.

The ISOLOK sampler is flushed after sample collection to prevent needle plugging and to prevent cross contamination of subsequent samples. To flush the ISOLOK sampler, the sample vial with a triple septum cap will be repositioned with respect to the discharge needle so that water can be applied at a port that allows flow through the vent needle opening. The septum is punctured by the sample collection needles, and the vial is held in place while activating the flush valve. The sample plunger will be partially extended to align the ISOLOK port for this flush operation, which will continue until water runs clear, generating approximately 250 ml of secondary waste.

#### 4H.2.2.1 Autosampler Secondary Containment and Leak Detection Functions

The ASX samplers in the PTF, HLW and LAW facilities contain both upper and lower secondary containment liners and leak detection systems. The upper containment area is designed to collect a potential leak from the incoming sample feed and return lines where they connect to the ISOLOK sampling device. If a leak occurs in the upper containment area, the leak flows to the sloped liner which diverts the leak to the annular space of the coaxial sample return lines. Leaks flow down the secondary containment pipe and discharge to secondary containment with leak detection, typically a sump with a radar level detector. The ASX sample feed and sample return lines, and the routing of potential leaks in the annular space of the return lines are shown on the associated process system P&IDs provided in Operating Unit Group 10, Appendices 8.2, 9.2, and 10.2.

The sloped stainless steel liner in the lower containment area is designed to divert liquids to a sloped collection trough. The trough contains a removable weir that allows liquids to collect and activate the thermal level detection switch and alarms to indicate that a leak has occurred. Effluent from a leak flows to the same drain line that manages ISOLOK flush solutions. The ISOLOK flush lines terminate below the top of the trough drain to ensure that the leak detection system is not activated when flushing the ISOLOK. The ASX lower containment area drain lines are shown on the associated process system P&IDs provided in Operating Unit Group 10, Appendices 8.2, 9.2, and 10.2. Typical autosampler secondary containment design details are provided in the Secondary Containment Design permit document provided in Operating Unit Group 10, Appendix 7.5.

The ASX secondary containment liner, liner trough, weir, leak detection instruments, coaxial sample feed and sample return piping make up the secondary containment and leak detection systems for the PTF, HLW and LAW ASX samplers. The balance of the ASX sampler equipment in each facility; the ASX pneumatic sample transfer lines between facilities, and the ASX sample receipt system in the Lab are not part of the ASX secondary containment system, and are excluded from the WTP permit by the sample exclusion [WAC 173-303-071(l)]. Drain line and leak detection instrument design details are provided in Table 4H-3.

If a spill occurs in either the upper and lower containment area, these areas can be rinsed. In the upper containment area, a wash wand will be provided to allow for localized wash if required. In the lower containment area, a spray ring and spray wands are provided to rinse this containment area. Wash solutions will be directed to the required location by the operator. Valves mounted externally to the autosampler allow the operator to deliver a wash stream to targeted areas that may require decontamination.

## 4H.3 Air Emission Control

The analytical laboratory ventilation systems include C1V, C2V, C3V, and C5V systems that aid in the containment and confinement of radiological and hazardous chemical constituents. Clean occupied areas without contamination potential are classified as C1 and will be isolated from areas with the potential for contamination (C2) and from areas with restricted occupancy, normal radiological hazards and higher contamination potential (C3 and C5).

C3 areas are restricted occupied areas and allow operator access under administrative controls as required for scheduled maintenance and operations. C5 areas have the highest contamination potential and will normally be unoccupied. These areas have, by virtue of their location and the activities performed within them, an increased potential for the release of contamination. The design objectives of the analytical laboratory HVAC system, and therefore the C5 area ventilation system, will be as follows:

- Aid in the confinement and containment of radiological and hazardous chemical contamination sources.
- Remove airborne particulates from the discharge air to ensure that emissions are within prescribed limits.
- Maintain space temperatures within the indoor design conditions.
- Satisfy safety requirements and codes and standards that are a part of the Safety Requirements Document.

The C5V ventilation system, which services the hotcells and the Hotcell Drain Collection Vessel (RLD-VSL-00165), will be isolated while in the DFLAW configuration.

The C5 area ventilation system is being designed to maintain a negative pressure in the C5 areas with respect to the surrounding areas. Hotcell ventilation, the Hotcell Drain Collection Vessel (RLD-VSL-00165), and the C3 maintenance shop glovebox will be exhausted to the C5 ventilation system. Fume hoods within the Rad Labs, the waste reduction and lab pack room, and the C3 maintenance shop will be exhausted to the C3 ventilation system. The ventilation from C2 and C3 areas will be filtered through a single stage of HEPA filters and exhausted through the analytical laboratory stacks. Air cascading into the C5 areas from the adjacent C2 and/or C3 areas will be exhausted through the analytical laboratory building stacks by the C5 exhaust fans after passing through two stages of HEPA filter banks.

## 4H.4 Laboratory Maintenance

The analytical laboratory maintenance shop provides space for performing preventive and corrective maintenance on laboratory equipment. There will be two shops, located in different potential

contamination areas. The C3 shop allows decontamination, maintenance, and storage of contaminated equipment such as hotcell manipulators. The C3 maintenance shop will be ventilated to the C3 ventilation system, and effluent from the C3 maintenance shop discharges to the Laboratory Area Sink Collection Vessel (RLD-VSL-00164). The C2 shop will provide space for the maintenance of equipment that is not expected to be radioactively contaminated such as electrical components, utilities systems components, and instruments, and will be ventilated to the C2 ventilation system.

A list of proposed maintenance activities that will be performed in the analytical laboratory maintenance shops is provided below.

| Analytical Laboratory Maintenance and Waste Management Activity Summary | | |
|---|---|---|
| **Task Description** | **Lab C3 Shop** | **In-Situ Activities** |
| Filter change out [a] | | X |
| Manipulator maintenance and repair [b] | X | X |
| Valve maintenance and repair | | X |
| Pump maintenance and repair | X | X |
| Exhaust fan maintenance and repair | | X |
| Repair and maintenance of fabricated equipment | X | X |
| Instrument maintenance and calibration | X | X |

a Spent filters will be disposed of following filter changeout using approved maintenance, waste management, and radiological procedures.

b Manipulators requiring extensive repairs will be pulled and transferred to the C3 workshop for decontamination. Once the contamination levels are reduced to within acceptable limits for hands-on maintenance, the manipulator will be repaired using approved maintenance and radiological procedures.

## 4H.5 Solid Waste Management

Mixed and dangerous solid waste will be accumulated in hotcells and periodically placed in waste drums. Waste from the individual hotcells will be transferred to a waste management cell where waste management, consolidation, and packaging activities are conducted. The waste cell contains tools and equipment to complete size reduction. These solid mixed and dangerous wastes as well as organic lab pack wastes will be transferred into waste drums prior to being transferred to the laboratory waste drum management area. Mixed and dangerous solid waste and organic lab pack wastes from the Rad Labs and maintenance areas will be accumulated in the individual labs and shops until they are transferred to the laboratory waste management area for waste consolidation and volume reduction. Waste consolidation will be completed in the volume reduction and lab pack rooms in the waste drum management area.

Laboratory secondary solid wastes will be transferred to Hanford site and off-site treatment facilities for treatment as needed. Treated secondary wastes will be transferred to Hanford site TSD site (Integrated Disposal Facility or Low-Level Burial Grounds) for disposal. Low-level radioactive wastes will be transferred to a Hanford site low-level radioactive disposal facility.

### 4H.5.1 Hotcell Solid Waste Management

Mixed and dangerous solid waste will be accumulated in hotcells and periodically placed in waste drums. Solid waste management in the hotcell will require remote handling. Waste from the individual hotcells will be transferred to HC-14 where waste management, consolidation, and packaging activities are conducted. The waste cell contains tools and equipment to complete size reduction. These wastes will be

transferred into waste drums prior to being transferred to the laboratory waste drum management area. Hotcell wastes will only be generated in the Baseline configuration.

Wastes generated in the hotcell area of the Lab are not packaged in the Waste Drum Management Area. Packaging and volume reduction of hotcell wastes, including high-activity wastes is completed in HC-14 prior to being transferred to the Waste Drum Management Area for storage.

### 4H.5.2 Container Storage Area for the Analytical Laboratory

The Lab Container Storage Area is located at the 0'-0" elevation and is referred to as the Waste Drum Management Area on laboratory facility drawings, and in laboratory system description documents. The Waste Drum Management Area includes five waste management rooms (139, 139A, B, C &D) located inside of the Lab facility. Room A-0139, the Waste Drum Management Room, is the primary dangerous and mixed secondary waste storage room, and is used to provide segregation of wastes. Separation of wastes will be provided to meet the separation distances provided in Uniform Fire Code and applicable sections of WAC 173-303.

The potential for precipitation inflow into the area is mitigated by a dry sump located inside the roll-up door on the south side of the airlock/clean drum export area.

Segregation and secondary containment for waste drums containing liquids will be provided by commercially available portable spill containment pallets/devices designed to contain 10 percent of the volume of all of the containers within the containment system or the volume of the largest container, whichever is greater. The exterior walls of the waste drum storage area are constructed of reinforced concrete and the entire floor area of the waste drum storage area is coated with a special protective coating. This coating is not designed to provide secondary containment. Coatings are provided to support the clean-up and decontamination of a potential spill.

Room A-0139A is equipped with a walk-in fume hood to support the packaging of organic liquids and other lab pack wastes. The room will be used to package and add absorbent to waste packages to comply with Hanford Site Solid Waste Acceptance Criteria (HSSWAC) and/or off-site disposal facility waste acceptance criteria for liquid and lab pack wastes. Room A-0139B is an airlock separating the main waste drum area and the lab pack and volume reduction areas. Room A-0139C is equipped with an in-drum compaction unit design to reduce the volume of low-activity wastes generated in the ARL areas. Because volume reduction and the packaging of wastes to meet transportation and/or disposal facility waste acceptance criteria is not a permitted activity, manufacturer cut sheets for support equipment in these rooms is not included in the package. The fifth room is Room A-139D, the airlock/clean drum export area. This area is used to provide additional storage, segregation, and management of waste containers prior to transfer to WTP, Hanford Site, or off-site waste disposal facilities.

**Table 4H-1 Analytical Laboratory Tank Systems**

| No. | System | Vessel Number/Location | Description | Material | Total Volume (US Gallons) | Approximate Dimensions (Inside Diameter) × Height or Length in feet and inches (tangent line/tangent line) |
|---|---|---|---|---|---|---|
| 1 | RLD | RLD-VSL-00164<br>A-B003 | Laboratory Area Sink Drain Collection Vessel | 6% Mo | 3,180 | 8’ 6” x 5’ 9” |
| 2 | RLD | RLD-VSL-00165<br>A-B004 | Hotcell Drain Collection Vessel | 6% Mo | 9,100 | 16’ 0” x 2’ 3” |

| Table 4H-2 Analytical Laboratory Tank Systems Secondary Containment Areas | | | | |
|---|---|---|---|---|
| **Room/Area** | **Approximate Room/Area Dimensions (L×W, in feet)** | **Miscellaneous Treatment Units or Tanks in Room/Area (Largest Plant Item)** | **Volume of Largest Plant Item in Room/Area (US Gallons)** | **Minimum Secondary Containment Height (feet)** |
| A-B003 Lab Area Sink Drain Collection Vessel Cell | 27ft 3in x 13ft | Laboratory Area Sink Drain Collection Vessel RLD-VSL-00164 | 3,180 | 3.8 |
| A-B004 Hot Cell Drain Collection, Vessel Cell | 29ft x 21ft | Hot Cell Drain Collection, RLD-VSL-00165 | 9,100 | 2.7 |

1

| Table 4H-3 Analytical Laboratory Sumps, Leak Detection Boxes, and Floor Drains/Lines | | | | |
|---|---|---|---|---|
| **Sump/Leak Detection Box or Floor Drain/Line I.D.#, Room, and Elevation** | **Maximum Sump/Leak Detection Box Capacity (US Gallons)** | **Sump/Leak Detection Box Level Detection Type** | **Sump/Leak Detection Box or Floor Drain/Line Dimensions (approximate) and Materials of Construction** | **Piping and Instrumentation Diagram Number** |
| **Analytical Laboratory** | | | | |
| **Sumps** | | | | |
| RLD-SUMP-00041<br>A-B003 (C3 Effluent Vessel Cell, El. -18’7”) | 30 | Radar | 30” Dia. x 13” Deep<br>Stainless Steel | **24590-LAB**<br>-M6-RLD-00002001 |
| RLD-SUMP-00042<br>A-B004 (C5 Effluent Vessel Cell, El. -19’2”) | 30 | Radar | 30” Dia. x 13” Deep<br>Stainless Steel | **24590-LAB**<br>-M6-RLD-00001001 |
| RLD-SUMP-00045<br>A-B002 (C3 Pump Pit Sump, EL -6’-81/2”LP) | 1.60 | Radar | 2’-0” x 2’-6” x 1/2”<br>Stainless Steel | **24590-LAB**<br>-M6-RLD-00002003 |
| RLD-SUMP-00043A<br>A-B007 (C5 Pump Pit Sump, EL -6’-7”LP) | 1.60 | Radar | 1’-6” x 3’-0” x 1/2”<br>Stainless Steel | **24590-LAB**<br>-M6-RLD-00001002 |
| RLD-SUMP-00043B<br>A-B005 (C5 Pump Pit Sump, EL -6’-7” LP) | 1.60 | Radar | 1’-6” x 3’-0” x 1/2”<br>Stainless Steel | **24590-LAB**<br>-M6-RLD-00001003 |
| RLD-SUMP-00044<br>A-B006 (C5 Piping Pit Sump, EL -6’-7” LP) | 1.60 | Radar | 2’-0” x 2’-6” x 1/2”<br>Stainless Steel | **24590-LAB**<br>-M6-RLD-00001004 |
| **Leak Detection Boxes** | | | | |
| RLD-LDB-00002<br>A-B004 (C5 Effluent Vessel Cell, El. -10’) | 6 | Thermal Dispersion | 8” Dia. x 24” Length/<br>Stainless Steel | **24590-LAB**<br>-M6-RLD-00008001 |
| RLD-LDB-00004<br>A-B004 (C5 Effluent Vessel Cell, El. -10’) | 6 | Thermal Dispersion | 8” Dia. x 24” Length/<br>Stainless Steel | **24590-LAB**<br>-M6-RLD-00008001 |

| Table 4H-3 Analytical Laboratory Sumps, Leak Detection Boxes, and Floor Drains/Lines | | | | |
|---|---|---|---|---|
| **Sump/Leak Detection Box or Floor Drain/Line I.D.#, Room, and Elevation** | **Maximum Sump/Leak Detection Box Capacity (US Gallons)** | **Sump/Leak Detection Box Level Detection Type** | **Sump/Leak Detection Box or Floor Drain/Line Dimensions (approximate) and Materials of Construction** | **Piping and Instrumentation Diagram Number** |
| RLD-LDB-00005<br>A-B003 (C3 Effluent Vessel Cell, El. -10’) | 6 | Thermal Dispersion | 8” Dia. x 24” Length/<br>Stainless Steel | **24590-LAB**<br>-M6-RLD-00007001 |
| RLD-LDB-00006<br>A-B003 (C3 Effluent Vessel Cell, El. -10’) | 6 | Thermal Dispersion | 8” Dia. x 24” Length/<br>Stainless Steel | **24590-LAB**<br>-M6-RLD-00007001 |
| RLD-LDB-00007<br>A-B003 (C3 Effluent Vessel Cell, El. -10’) | 6 | Thermal Dispersion | 8” Dia. x 24” Length/<br>Stainless Steel | **24590-LAB**<br>-M6-RLD-00007001 |
| RLD-LDB-00008<br>A-B003 (C3 Effluent Vessel Cell, El. -10’) | 6 | Thermal Dispersion | 8” Dia. x 24” Length/<br>Stainless Steel | **24590-LAB**<br>-M6-RLD-00007001 |
| RLD-LDB-00009<br>A-B004 (C5 Effluent Vessel Cell, El. -10’) | 6 | Thermal Dispersion | 8” Dia. x 24” Length/<br>Stainless Steel | **24590-LAB**<br>-M6-RLD-00008001 |
| RLD-LDB-00011<br>A-B003 (C3 Effluent Vessel Cell, El. -10’) | 6 | Thermal Dispersion | 8” Dia. x 24” Length/<br>Stainless Steel | **24590-LAB**<br>-M6-RLD-00007001 |
| **Drain Lines** | | | | |
| RLD-WU-02207-S11E-04 Drain Line<br>A-B003, (C3 Effluent Vessel Cell, El. -18’7”) | N/A | N/A | 4” Dia.<br>316L | **24590-LAB**<br>-M6-RLD-00002001 |
| RLD-ZN-02203-S11E-04 Drain Line<br>A-B004, (C5 Effluent Vessel Cell, El. -19’2”) | N/A | N/A | 4” Dia.<br>316L | **24590-LAB**<br>-M6-RLD-00001001 |
| RLD-ZN-03393-S11E-04 Drain Line<br>A-B004, (C5 Effluent Vessel Cell, El. -19’2”) | N/A | N/A | 4” Dia.<br>316L | **24590-LAB**<br>-M6-RLD-00001001 |
| RLD-ZN-03394-S11E-04 Drain Line<br>A-B004, (C5 Effluent Vessel Cell, El. -19’2”) | N/A | N/A | 4” Dia.<br>316L | **24590-LAB**<br>-M6-RLD-00001001 |

| Table 4H-4 Analytical Laboratory Container Storage Areas | | |
|---|---|---|
| **Container Storage Area** | **Maximum Waste Volume (US Gallons) [1]** | **Approximate Dimensions (L × W × H, in feet) [2]** |
| **Analytical Laboratory** | | |
| 1. Laboratory Waste Management Area (A-0139 and A-0139A/B/C/D) | 139,586 | 49’ x 38’ x 10’ |

[1] The conversion factor used to convert from cubic feet to gallons is 7.4805 gal/ft$^3$.

[2] The dimension for height (H) is based on the height of the largest waste container stored in the area (i.e., LAW container is 7.5 ft, HLW canister is 15 ft, melters are assumed to be 16 ft, and a B-25 box is 5 ft - stacked a maximum of two high is 10 ft).

This page intentionally left blank.

# WASTE TREATMENT AND IMMOBILIZATION PLANT
# CHAPTER 4I
# BALANCE OF FACILITIES

## CHANGE CONTROL LOG

Change Control Logs ensure that changes to this unit are performed in a methodical, controlled, coordinated, and transparent manner. Each unit addendum will have its own change control log with a modification history table. The "**Modification Number**" represents Ecology's method for tracking the different versions of the permit. This log will serve as an up to date record of modifications and version history of the unit.

Modification History Table

| Modification Date | Modification Number |
|---|---|
| 09/05/2017 | 8C.2017.6F |
| 12/15/2016 | 8C.2016.Q3 |
| | |

This page intentionally left blank.

# CHAPTER 4I
# BALANCE OF FACILITIES

This page intentionally left blank.

# CHAPTER 4I
# BALANCE OF FACILITIES

## TABLE OF CONTENTS

4I Balance of Facilities (BOF) ..... 5
4I.1 Containers ..... 5
4I.1.1 Description of Containers ..... 6
4I.1.2 Container Management Practices ..... 7
4I.1.3 Container Labeling ..... 8
4I.1.4 Containment Requirements for Storing Waste ..... 8
4I.1.5 Prevention of Reaction of Ignitable, Reactive, and Incompatible Wastes in Containers ..... 11
4I.2 Plant Service Air (PSA) / Instrument Service Air Systems ..... 11
4I.3 Plant Cooling Water System (PCW) ..... 11
4I.4 Low-Pressure Steam System (LPS) ..... 12
4I.5 High-Pressure Steam System (HPS) ..... 12
4I.6 Demineralized Water System (DIW) ..... 12
4I.7 Process Service Water System (PSW) ..... 12
4I.8 Chilled Water (CHW) System ..... 12
4I.9 Glass Former Reagent (GFR) System ..... 13
4I.10 Cathodic Protection System ..... 13

## TABLE

Table 4I-1 BOF Container Storage Areas ..... 15

This page intentionally left blank.

# 4I Balance of Facilities (BOF)

The Balance of Facilities (BOF) provides support systems and utilities required for the waste treatment processes within the Pretreatment Facility, Low-Activity Waste (LAW) vitrification facility, High-Level Waste (HLW) vitrification facility, Analytical Laboratory (Lab), and the Effluent Management Facility (EMF). These will include, but not limited to, heating and cooling, process steam, process ventilation, chilled water, primary and secondary power supplies, and compressed air. The primary BOF process support systems are:

- Plant service air (PSA)
- Plant cooling water (PCW)
- Low-pressure steam (LPS)
- High-pressure steam (HPS)
- Demineralized water (DIW)
- Process service water (PSW)
- Chilled water (CHW)
- Glass former reagent (GFR)
- Cathodic protection (CPE)

The BOF systems are described in Sections 4I.1 through 4I.10. The BOF support and utility systems described in sections 4I.2 through 4I.9 will not manage dangerous waste, and are described below for informational purposes only. Section 4I.1 addresses BOF dangerous waste container management areas, and Section 4I.10 addresses the BOF CPE system. The majority of the of underground piping systems within the CPE system are not dangerous/mixed waste lines, however, a segment of dangerous/mixed waste underground transfer lines between the Pretreatment Facility, and the HLW Vitrification Facility, the LAW Vitrification Facility, and the Lab are cathodically protected. Underground waste transfer lines to support the Direct Feed Low Activity Waste (DFLAW) configuration are isolated from the soil environment with insulation and a high density polyethylene (HDPE) jacket, and are not part of the CPE system.

## 4I.1 Containers

This section identifies the containers and container management practices that will be followed at the BOF. The term “container” is used as defined in Washington Administrative Code (WAC) 173-303-040. Note that in this chapter and throughout the permit, terms other than containers may be used, such as canisters, boxes, bins, flasks, casks, and overpacks.

The container storage areas located within the BOF include:

- Nonradioactive dangerous waste storage area
- Failed melter storage facility

Container storage area dimensions at the BOF are summarized in Table 4I-1.

The following sections address waste management containers:

- Description of Containers - Section 4I.1.1
- Container Management Practices - Section 4I.1.2
- Container Labeling - Section 4I.1.3
- Containment Requirements for Storing Waste - Section 4I.1.4
- Prevention of Ignitable, Reactive, and Incompatible Wastes in Containers - Section 4I.1.5

### 4I.1.1 Description of Containers

The types of waste managed in containers include:

- Miscellaneous mixed waste (secondary waste)
- Miscellaneous nonradioactive dangerous waste (secondary waste)

The waste form dictates the type of containers used for waste management. The following paragraphs describe these types of containerized waste that are managed at the BOF.

Miscellaneous Mixed Waste

Generally, miscellaneous mixed wastes are secondary wastes that may include, but are not limited to, the following items:

- Spent or failed equipment
- Offgas High Efficiency Particulate Air (HEPA) filters
- Melter consumables
- Spent melters

Spent equipment and offgas filters will typically be managed in commercially-available containers such as steel drums or steel boxes, of varying size. The containers for miscellaneous mixed waste will comply with transportation requirements, with receiving Treatment, Storage, and Disposal (TSD) facility waste acceptance criteria, and will be compatible with the miscellaneous mixed waste. These containers may or may not include a liner. Final container selection, container and waste compatibility, and the need for liners, will be based on the physical, chemical, and radiological properties of the waste being managed.

Melter consumables are routinely generated wastes and include spent feed tubes, pressure transducers, bubblers, thermocouples, and discharge risers. LAW melter consumables will be placed into approved disposal containers of varying size.

HLW melter consumables will be remotely size reduced, if necessary, and placed into steel baskets with lids. The baskets will be placed into drums and the drums placed into shielded casks for export from the facility.

The LAW Locally Shielded Melter (LSM) will be classified as hazardous debris for land disposal restrictions purposes. After a spent HLW Melter is deemed to meet criteria and regulations for onsite disposal, it will be placed in a welded carbon steel container (overpack) or other acceptable packaging in accordance with waste acceptance criteria for the receiving TSD facility. The design of the Failed Melter Storage Facility is addressed in interim compliance schedule, Dangerous Waste Permit (DWP) Operating Unit Group 10, Appendix 1.0.

Each miscellaneous mixed waste container will have associated documentation that describes the contents, such as waste type, physical and chemical characterization, and radiological characterization. This information will be retained within the plant information network.

Most miscellaneous secondary mixed wastes will be spent equipment and consumables such as pumps, air lances, HEPA filters, etc., and are not expected to contain liquids. If wastes are generated that contain liquids, absorbents may be added in order to comply with the receiving TSD Facility waste acceptance criteria.

Miscellaneous Nonradioactive Dangerous Waste

Each nonradioactive dangerous waste container will have associated documentation that describes the contents, such as waste type and physical and chemical characterization. Commercially available containers will be used. The types of containers used for packaging nonradioactive dangerous waste will comply with the receiving TSD facility waste acceptance criteria and transportation requirements.

However, final container selection, container and waste compatibility, and the need for liners will be based on the physical and chemical properties of the waste being managed.

### 4I.1.2 Container Management Practices

The following paragraphs describe how containers are managed in the BOF container management areas.

#### 4I.1.2.1 Miscellaneous Mixed Waste and Miscellaneous Nonradioactive Dangerous Waste Containers

Miscellaneous Mixed Waste Containers

Miscellaneous mixed waste (secondary waste) will be managed in the failed melter storage facility. Containers will be kept closed unless waste is being added, removed, or sampled while in the container storage area. Containers stored in this area will be placed on pallets, or otherwise elevated to prevent contact with liquid, if present. Table 4I-1 summarizes the dimensions and maximum capacity of the container storage area. Containers will be managed in the container storage area, and then transferred to a suitable TSD facility.

The failed melter storage facility will be a stand-alone building. It will be used primarily to manage HLW melters that have completed their useful service life. The failed melters storage facility may also receive containerized miscellaneous mixed waste, if needed.

Miscellaneous Nonradioactive Dangerous Waste Containers

Miscellaneous dangerous waste containers will typically be managed in the nonradioactive dangerous waste container storage area, or in non-permitted waste management units (satellite accumulation areas and less-than-90-day storage areas) located throughout the BOF. The nonradioactive dangerous waste container storage area will consist of a concrete pad approximately 25 feet (ft) by 30 ft. The area may include a metal roof or portable storage buildings such as cargo containers or storage lockers. Containers will be kept closed unless waste is being added, removed, or sampled. They will routinely be moved by forklift or drum cart, and will be managed in a manner that prevents ruptures and leaks. The storage capacity for the nonradioactive dangerous waste container storage area is listed in Table 4I-1. The containers in that area may be stacked two high and aisle spacing will be at least 30 inches (in.) between rows of containers. Containers stored in this area will be placed on pallets, or otherwise elevated to prevent contact with liquid, if present.

#### 4I.1.2.2 Waste Tracking

The plant information network interfaces with the integrated control network and is designed to collect and maintain plant information. The plant information network is currently planned to support the following systems (all systems used at the plants/facilities and BOF are provided for information only):

- Plant data warehouse and reporting system
- Laboratory information management system
- Waste tracking and inventory system

Inventory and Batch Tracking

The waste tracking and inventory system will interface with the information system data historian to provide reporting information such as tank volumes, waste characteristics, and facility inventories of process waste. The waste tracking system will also be used to query operations parameters at any time information is needed, as specified by operations, to manage the process system.

Secondary Waste Stream Tracking

Containerized secondary waste streams and equipment will be tracked and managed through commercially available database management software. Containers will be mapped in each plant and updated during the inspection process using a commercially available drawing software application.

Laboratory Information Management System

The laboratory information management system (LIMS) will be an integral feature of the plant information network. The LIMS will serve as an essential tool for providing data management of regulatory and processing samples. The chosen LIMS will be a commercial off-the-shelf software package designed for performing laboratory information management tasks as described in American Standard Test Method (ASTM) E1578-93, *Standard Guide for Laboratory Information Management Systems (LIMS)*.

The LIMS will track the flow of samples through the laboratory. Samples received in the laboratory will be identified with a unique identification label. The identification label provides details of the sample process stream. Baseline analyses are defined by the requesting plant. Additional analyses, as required, will be input into LIMS by laboratory analysts. Data will be input into LIMS manually or by data transfer using LIMS/instrument interface. Analyses will be performed using approved and validated analytical procedures.

Analytical results will be compiled by the LIMS and held pending checking and approval by appropriate staff. Approved results will be reported to the requesting plant.

### 4I.1.3 Container Labeling

Miscellaneous Mixed Waste Containers

The miscellaneous mixed waste containers will be labeled with the accumulation or generation start date, as appropriate, the major risk(s) associated with the waste, and the words “hazardous waste” or “dangerous waste.” A waste tracking and inventory system will be implemented. Labels and markings will be positioned so that required information is visible. The label will meet the WAC 173-303-630(3) requirements, and the dangerous waste number will be clearly identified.

Miscellaneous Dangerous Waste Containers

The miscellaneous dangerous waste drums will be labeled with the accumulation or generation start date, as appropriate, the major risk(s) associated with the waste, and the words “hazardous waste” or “dangerous waste”. A waste tracking and inventory system will be implemented. Labels and markings will be positioned so that required information is visible. The label will meet the WAC 173-303-630(3) requirements, and the dangerous waste number will be clearly identified.

### 4I.1.4 Containment Requirements for Storing Waste

Secondary containment requirements for the waste are discussed below.

#### 4I.1.4.1 Secondary Containment System Design

Secondary containment is required for areas in which containers hold free liquids. It is also required for areas managing wastes exhibiting the characteristics of ignitability or reactivity as defined in WAC 173-303-090(5) and (7).

Miscellaneous Mixed Waste

Miscellaneous mixed waste storage areas may contain waste requiring secondary containment. If wastes containing liquids or wastes exhibiting the characteristics of ignitability or reactivity are generated, portable secondary containment that meets the requirements of WAC 173-303-630(7) will be provided. The portable secondary containment provided will be capable of collecting and holding spills and leaks.

It will have the capacity to contain ten percent of the volume of all containers or the entire volume of the largest container, whichever is greater.

Miscellaneous Dangerous Waste

The nonradioactive dangerous waste storage area may contain waste requiring secondary containment. If wastes containing liquids or wastes exhibiting the characteristics of ignitability or reactivity are generated, portable secondary containment that meets the requirements of WAC 173-303-630(7) will be provided. The portable secondary containment provided will be capable of collecting and holding spills and leaks. It will have the capacity to contain ten percent of the volume of all containers or the entire volume of the largest container, whichever is greater.

#### 4I.1.4.2 System Design

Miscellaneous Mixed Waste

There will be one miscellaneous mixed waste (secondary waste) container storage area at the BOF, as follows:

- Failed melter storage facility

The failed melter storage facility will be used primarily to manage HLW Melters that have completed their useful service life. These units will be received in carbon steel overpack containers allowing limited hands-on contact. These overpacks will not be opened while the waste melters are located in this storage facility. The facility is capable of storing up to three waste melters at any given time. The spent HLW Melters will not be stacked.

The failed melter storage facility may also receive containerized miscellaneous mixed waste, if needed. These waste containers will be sealed prior to transport to the failed melter storage facility. The containers will not be opened while at this storage facility. The waste containers will not be stacked more than two containers high. The failed melter storage facility will be a stand-alone building located in the southern portion of the Waste Treatment Plant (WTP).

Miscellaneous Dangerous Waste

Waste containing liquid may be present in the nonradioactive dangerous waste storage area. Containers with liquids will be provided with portable secondary containment meeting the requirements of WAC 173-303-630(7).

#### 4I.1.4.3 Structural Integrity of the Base

The storage areas will be constructed to support storage and transportation of containers within the container storage areas and will be designed with the following:

- Containment system capable of collecting and holding spills and leaks.
- Base will be free of cracks and gaps and sufficiently impervious to contain leaks.
- Positive drainage control.
- Sufficient containment volume.
- Sloped to drain or remove liquid, as necessary.

#### 4I.1.4.4 Containment System Capacity

Miscellaneous Mixed Waste

Each container holding liquid dangerous waste will be placed into portable secondary containment that meets the requirements of WAC 173-303-630(7). The waste container will function as the primary containment while the portable containment device will function as the secondary containment.

Each portable secondary containment will have the capacity to contain 10% of the volume of all containers within the containment area, or the volume of the largest container, whichever is greater.

Miscellaneous Dangerous Waste

Waste containing liquid may be present in the nonradioactive dangerous waste container storage area. Each container holding liquid nonradioactive dangerous waste will be placed into portable secondary containment. The waste container will function as the primary containment while the portable secondary containment device will function as the secondary containment.

Each portable secondary containment will have the capacity to contain 10% of the volume of all containers within the containment area, or the volume of the largest container, whichever is greater. Typically, the waste containers will be steel drums.

#### 4I.1.4.5 Control of Run-On

Miscellaneous Mixed Waste

Run-on will not reach the interior of the BOF miscellaneous mixed waste storage areas, because the storage areas will be located within buildings provided with roof gutters to remove precipitation.

Miscellaneous Dangerous Waste

Run-on will not reach the interior of the nonradioactive dangerous waste container storage area, because waste will be managed in buildings with walls and roof to remove precipitation.

#### 4I.1.4.6 Removal of Liquids from Containment System

Miscellaneous Mixed Waste

Portable secondary containment devices will be provided for individual containers that contain liquids. Hand pumps or similar devices will be used to remove liquid released to the portable secondary containments.

Miscellaneous Dangerous Waste

Portable secondary containment devices will be provided for individual containers that contain liquids. Hand pumps or similar devices will be used to remove liquid released to the portable secondary containments.

#### 4I.1.4.7 Demonstration that Containment is not Required because Containers do not Contain Free Liquids, Wastes that Exhibit Ignitability or Reactivity, or Wastes Designated F020-023, F026 or F027

Miscellaneous Mixed Waste

Secondary containment will be provided for individual containers that manage liquids. Wastes with the F020-F023, F026, and F027 numbers are not identified for the double shell tank (DST) system. Therefore, these waste numbers will not be present at the BOF.

Miscellaneous Dangerous Waste

The nonradioactive dangerous waste container storage area may manage liquids and D001 and D003 waste; therefore, secondary containment will be provided. Wastes with the F020-F023, F026, and F027 numbers are not identified for the DST system. Therefore, these waste numbers will not be present at the BOF.

### 4I.1.5 Prevention of Reaction of Ignitable, Reactive, and Incompatible Wastes in Containers

Potentially incompatible wastes are not expected to be managed in the BOF container storage areas. If such wastes are managed in these areas, the containers of incompatible wastes or chemicals will not be stored in close proximity to each other. Acids and bases will be stored on separate portable secondary containment devices; oxidizers will be stored in areas separate from combustible materials; and corrosive chemicals will be stored on a separate portable secondary containment devices. These separate storage areas within the unit will be clearly marked with signs indicating the appropriate waste to be stored in each area. Potentially incompatible waste will be stored at least one aisle width apart.

## 4I.2 Plant Service Air (PSA) / Instrument Service Air Systems

The BOF plant service air (PSA) system will provide a continuous supply of clean, dry air for the process systems in the pretreatment facility, Lab, LAW vitrification facility, EMF, and HLW vitrification facility. Each facility will maintain a reservoir of PSA to accommodate load fluctuations and distributes the compressed air to the designated end users. The air distributed from the BOF PSA system to each facility is the source of the PSA and the Instrument Service Air (ISA) within each facility.

The PSA system components will consist of compressors, dryers, air receiver vessels, distribution piping, pressure control stations, air amplifiers, valves, vents, drains, utility racks, filters, and monitoring instruments.

The ISA system is a distribution piping network that will reduce and control downstream air pressure and supplies compressed air to designated equipment, instruments, and other end users located throughout the facility. It will maintain a reservoir of compressed air received from the BOF PSA system and in doing so, dampen pressure fluctuations caused by variations in the supplied airflow or in end-user demands. In addition, the Pretreatment facility and LAW vitrification facility are designed to use ISA stored air as a short-term supply of backup air in the event that services from the BOF PSA are interrupted.

The air supplied by PSA and ISA systems within each facility supports operation of tanks and miscellaneous unit systems, instruments and ancillary equipment.

## 4I.3 Plant Cooling Water System (PCW)

The BOF plant cooling water system (PCW) system will provide a continuous supply of cooling water to selected plant equipment for heat removal. The BOF PCW will receive potable make-up water from the domestic water system (DOW) at the cooling tower. A backup source will be provided from the raw water system (RWW). The PCW system will supply cooling water to the chiller /compressor plant, steam plant and process areas. The system will remove heat from active process equipment and cooling coils in process buildings and conducts this heat to the atmosphere or local environment through evaporation at the cooling tower. In the Pretreatment facility, the PCW is used in the waste feed evaporation process (FEP), treated LAW evaporation process (TLP), cesium nitric acid recovery process (CNP), and pretreatment vessel vent process (PVP) systems.

Cooling water for the HLW vitrification facility supports the HLW melter feed process (HFP), HLW melter process (HMP), HLW melter offgas treatment system (HOP), and melter power supplies. For the LAW vitrification facility, the major user is the LAW melter process system (LMP), pour cave cooling panels, and LAW melter power supplies.

The BOF PCW system will include, but is not limited to, the cooling tower, cooling tower basin, the primary cooling water circulation pumps, filter pumps, chemical injection tanks, and associated piping. The cooling water system is designed with primary and secondary loops to remain uncontaminated by mixed waste constituents. The primary loop circulates cooling waste through heat exchangers within the HLW vitrification facility, LAW vitrification facility, and Pretreatment facility and through equipment in the BOF chiller compressor plant. The system also provides cooling water to quench the steam plant

blow down. The HLW vitrification facility, LAW vitrification facility, and Pretreatment facility will also have closed secondary loops that distribute cooling water to process equipment. Cooling water will be chemically treated to promote system operability and service life of 40 years.

## 4I.4 Low-Pressure Steam System (LPS)

The low-pressure steam system (LPS) will provide a continuous supply of low-pressure steam for various users in the pretreatment facility, Lab, LAW vitrification facility, EMF, and HLW vitrification facility. The process facilities main use of steam will be for tank heating for the evaporation process, and for HVAC heating coils.

The low-pressure steam system will be supplied from the high-pressure steam system through pressure-reducing stations. The low pressure applications will consist of air handling units, humidifiers, and booster heaters. The steam condensate and feed system will collect condensate from the low-pressure steam users, monitor for mixed waste contamination, and return it to the steam plant for re-use.

## 4I.5 High-Pressure Steam System (HPS)

The high-pressure steam system (HPS) will provide a continuous supply of high-pressure steam to the Pretreatment facility, Lab, LAW vitrification facility, EMF, and HLW vitrification facility. The high pressure saturated steam is generated in the BOF steam plant facility, which consists of six fire tube boiler packages (five continuously operating at peak conditions, and one in standby), and associated supporting equipment. The HPS distributes steam through above ground piping to process equipment, ejectors for transfer of fluids, and hot water heaters in the Pretreatment Facility, Lab, LAW Vitrification Facility, EMF, and HLW Vitrification Facility.

## 4I.6 Demineralized Water System (DIW)

The demineralized water system (DIW) will treat process service water, and produce, store and distribute the treated water through an underground piping distribution system to users in BOF, Pretreatment facility, Lab, LAW vitrification facility, EMF, and HLW vitrification facility. Demineralized water will be produced in the BOF water treatment building by pumping process service water through a series of cartridge filters and reverse osmosis units. The treated water will be stored in the BOF demineralized storage tank. Demineralized water will be pumped from the storage tank through an ultraviolet sterilization system to decontaminate biological organisms then sent through a final cartridge filter before it is fed into the distribution system.

Demineralized water will primarily be used for boiler makeup, chemical reagent makeup, equipment decontamination, process pipeline flushes, sampling pipeline flushes, vessel and bulge rinses, pump priming, Wet Electrostatic Precipitator misting, and instrumentation rinses.

## 4I.7 Process Service Water System (PSW)

The process service water system (PSW) will provide filtered water for operations and maintenance purposes. The water will be stored and distributed to the Pretreatment facility, LAW vitrification facility, EMF, HLW vitrification facility and Lab. The system will consist of two storage tanks, filters, pumps, and distribution piping and supply filtered water to end users for various systems, such as offgas treatment, plant wash, and make-up to chilled water. The PSW will receive water directly from the Hanford site domestic (potable) water system (DOW). Equipment for the PSW is located in the water treatment building, except for the tanks, which are located outside.

## 4I.8 Chilled Water (CHW) System

The chilled water (CHW) system will supply chilled water to selected equipment in the HLW vitrification facility, EMF, Lab, LAW vitrification facility, and Pretreatment facility. The CHW system will consist of chillers, fixed-speed distribution pumps, adjustable-speed drive booster pumps, an expansion vessel, a chemical feed vessel, an air separator, piping, valves, in-line components, instruments, and controls.

Each of these facilities will be equipped with a secondary CHW loop that draws from the primary distribution. The HLW vitrification facility, Lab, EMF, and LAW vitrification facility secondary loops will supply water to air handling units, fan coil units, in-bleed cooling coils, and breathing service air system compressors. Both the LAW vitrification facility and Pretreatment facility secondary loops will supply water to heat exchangers used by the process cooling loops.

The chilled water system is designed to remain uncontaminated by mixed waste constituents. The process cooling loops are closed loops systems and do not share circulating water with the secondary or primary loops. The process cooling loops in the LAW vitrification facility and Pretreatment facility are used for cooling both process vessel cooling coils and process vessel cooling jackets. Secondary chilled water returns from the HLW vitrification facility, Lab, LAW vitrification facility, EMF, and Pretreatment facility and cascades through the PSA dryer coolers before it is cooled and once again returns to the end users.

The CHW system primary and secondary loops, as well as the LAW and PTF CHW process cooling loops, will receive corrosion inhibitors and pH adjustment chemicals, as needed, to limit deterioration of the materials that are in contact with the cooling medium and the fouling of heat transfer surfaces.

## 4I.9 Glass Former Reagent (GFR) System

The glass former reagent system (GFR) will provide glass former reagents and sucrose to the LAW Vitrification Facility and HLW Vitrification Facility. The system will also provide silica to the LAW container finishing handling system (LFH) for inert void fill for Immobilized LAW containers. Sucrose may also be mixed with the glass formers and added to the radioactive waste to enhance melter performance. The GFR system is comprised of the equipment needed to receive, store, blend, and transport glass formers to the LAW Vitrification Facility and HLW Vitrification Facility. The GFR system includes the glass former handling equipment in BOF, the glass former mixers located in HLW vitrification facility and LAW vitrification facility and the inert fill hoppers in the LAW facility vitrification facility. The LAW vitrification facility and HLW vitrification facility portions of the GFR system are described in WTP DWP Permit Sections 4E.2.1 and 4F.2.1, respectively.

## 4I.10 Cathodic Protection System

An impressed current cathodic protection system will be used for eliminating or mitigating corrosion on interplant underground piping as well as the interior surfaces and bottoms of most field erected tanks. The cathodic protection system will maintain a negative polarized potential between the protected pipe or tank and a saturated copper/copper sulfide reference electrode. The impressed current cathodic protection system will use direct current provided by a rectifier that is powered from the plant's normal 480 volts alternating current power system. The direct current from the rectifier will be connected across the buried anode wire and the protected pipe or tank bottom. The current flows from the anode wire, which is positive, through the electrolyte, to the protected surface, which is negative, and back to the rectifier completing the electrical circuit.

BOF non-dangerous/mixed waste containing pipelines and equipment that will be cathodically protected include:

- Plant service air main headers
- Diesel fuel oil pipelines (between the diesel fuel oil tank and the steam plant facility)
- Anhydrous ammonia reagent pipeline
- PSA-integral transportation system compressed air pipeline
- Metallic piping and fittings that are within the zone of influence of the cathodic protection system.

BOF non-dangerous/mixed waste field erected tanks that are cathodically protected include:

- Fuel oil tank
- Domestic water tank
- Demineralized water tank
- Process service water feed tank
- Process service water supply tank
- Non-rad effluent tank
- Fire water tanks

Additionally, various underground waste transfer pipelines that manage mixed waste are cathodically protected. Underground mixed waste transfer pipelines within WTP that will be cathodically protected include:

- Transfer lines between the Pretreatment Facility and the HLW Vitrification Facility
- Transfer lines between the Pretreatment Facility and the LAW Vitrification Facility
- Transfer lines between the Analytical Laboratory and the Pretreatment Facility

The underground waste transfer lines installed to support the DFLAW configuration are coaxial lines that are constructed of stainless steel primary pipe, with a carbon steel encasement pipe that is coated with fusion bonded epoxy (FBE). The coating system and water barrier consist of the FBE, polyurethane insulation, and a jacket or thermoplastic outer water barrier made of HDPE. Cathodic protection is not needed for the underground waste transfer lines installed to support the DFLAW configuration as the pipe system is made of corrosion resistant materials, providing water resistant construction. Additional information on the cathodic protection system for the underground waste transfer lines that manage mixed waste for all facilities can be found in Chapter 4 Process Information.

| Table 4I-1 BOF Container Storage Areas | | |
|---|---|---|
| **Container Storage Area** | **Maximum Waste Volume (US Gallons) [1]** | **Approximate Dimensions (L × W × H, in feet) [2]** |
| 1. Nonradioactive Dangerous Waste Container Storage Area (located on the Part A Figures) | 56,104 | 25’ × 30’ × 10’ |
| 2. Failed Melter Storage Facility (located on the Part A Figures) | 403,947 | 75’ × 45’ × 16’ |

[1] The conversion factor used to convert from cubic feet to gallons is 7.4805 gal/ft$^3$.

[2] The dimension for height (H) is based on the height of the largest waste container stored in the area (i.e., LAW container is 7.5 ft, HLW canister is 15 ft, melters are assumed to be 16 ft, and a B-25 box is 5 ft - stacked a maximum of two high is 10 ft).

This page intentionally left blank.

# WASTE TREATMENT AND IMMOBILIZATION PLANT
# CHAPTER 6.0
# PROCEDURES TO PREVENT HAZARDS

## CHANGE CONTROL LOG

Change Control Logs ensure that changes to this unit are performed in a methodical, controlled, coordinated, and transparent manner. Each unit addendum will have its own change control log with a modification history table. The "**Modification Number**" represents Ecology's method for tracking the different versions of the permit. This log will serve as an up to date record of modifications and version history of the unit.

Modification History Table

| Modification Date | Modification Number |
|---|---|
| 09/05/2017 | 8C.2017.6F |
| 08/2011 | |
| | |

This page intentionally left blank.

# CHAPTER 6.0
# PROCEDURES TO PREVENT HAZARDS

This page intentionally left blank.

# CHAPTER 6.0
# PROCEDURES TO PREVENT HAZARDS

## TABLE OF CONTENTS

6.0 INTRODUCTION ..... 5
6.1 Security ..... 5
6.1.1 Security Procedures and Equipment ..... 5
6.1.2 Warning Signs ..... 5
6.1.3 Surveillance and/or Barriers ..... 5
6.1.4 Waiver ..... 5
6.2 Preparedness and Prevention Requirements ..... 5
6.2.1 Equipment Requirements ..... 6
6.3 Aisle Space Requirement ..... 7
6.4 Preventive Procedures, Structures, and Equipment ..... 7
6.4.1 Unloading/Loading Operations ..... 7
6.4.2 Runoff ..... 7
6.4.3 Contamination of Water Supplies ..... 7
6.4.4 Equipment and Power Failures ..... 8
6.4.5 Personal Protection Equipment ..... 8
6.4.6 Prevent Releases to the Atmosphere ..... 9
6.5 Prevention of Reaction of Ignitable, Reactive, and/or Incompatible Waste ..... 9

# ACRONYMS

| | |
|---|---|
| DST | double-shell tank |
| EMF | Effluent Management Facility |
| FM | Factory Mutual |
| IHLW | immobilized high-level waste |
| ILAW | immobilized low-activity waste |
| NFPA | National Fire Protection Association |
| TSD | treatment, storage, or disposal |
| WTP | Waste Treatment and Immobilization Plant |

# 6.0 INTRODUCTION

This chapter addresses hazard prevention at the Waste Treatment and Immobilization Plant (WTP). It covers the following topics: security; preparedness and prevention requirements; preventive procedures, structures, and equipment; and prevention of reaction of the ignitable, reactive, and incompatible waste at the WTP. Information is presented in two formats: narrative and table. The Inspection Plan can be found in Appendix 6A.

## 6.1 Security

### 6.1.1 Security Procedures and Equipment

The entire Hanford Site is a controlled-access area. For surveillance information of the Hanford Site, refer to the Site-wide Permit.

The following sections describe the procedures and equipment used to prevent the unknowing entry, and to minimize the possibility for unauthorized entry into the WTP. Security methods include barriers, entry control through facility entrances and warning signs that support security and control access to the WTP.

### 6.1.2 Warning Signs

Warning signs, written in English, stating, “DANGER - UNAUTHORIZED PERSONNEL KEEP OUT”, are provided in sufficient numbers to be seen from areas that contain dangerous or mixed waste, are legible from a distance of at least 25 feet, and visible from any angle of approach to the WTP. These warning signs will be posted at the following locations:

- Around the perimeter of the active portion of the WTP facilities.
- On entrances and exits to enclosed buildings (i.e., Low Activity Waste [LAW]) where dangerous or mixed waste is actively managed.

Signs will be posted at the main site access entrance, instructing visitors to report to the WTP administration building to gain access to the WTP (Washington Administrative Code (WAC) 173-303-310(2)(a)).

Sign posting locations will be added to the WTP permit prior to managing any dangerous or mixed waste.

### 6.1.3 Surveillance and/or Barriers

The entire Hanford Site is a controlled-access area. For continuous surveillance information of the Hanford Site, refer to the Site-wide Permit. At the WTP facility, independent security contractors perform 24/7 guard coverage. The security force is responsible for controlling entry into the WTP facility via two access gates. In addition, the security force will perform random vehicle inspections, routine facility patrols and will be responsible for issuing visitor badges. Visitors must check in at the administration building located next to the main entry gate and will be escorted as required. Refer to Chapter 2.0 for information about the WTP fencing and control access gates.

The WTP facility uses two fences, one around the facility’s perimeter and a second inner fence that control access to dangerous waste management areas. The perimeter and inner fences are approximately 7-foot-high and made of chain link.

### 6.1.4 Waiver

No waivers of the security procedures and equipment requirements for the WTP are requested.

## 6.2 Preparedness and Prevention Requirements

This section describes the preparedness and prevention measures employed by the WTP to avoid or mitigate the possibility of a fire, explosion, or any unplanned sudden release of dangerous waste or

dangerous waste constituents to air, soil, or surface water that could threaten human health or the environment.

### 6.2.1 Equipment Requirements

The following sections describe internal and external communications, and emergency equipment required and located at WTP.

#### 6.2.1.1 Internal Communications

The onsite communication system at the WTP provides immediate emergency information to facility personnel, and includes public address and alarm systems. The public address system provides for verbal instruction and communication to WTP personnel. The internal communication system also notifies personnel of the following local or plant-wide alarm-activated emergency situations: building evacuations, fire or explosion, radioactive discharges, and high airborne contamination. The Contingency Plan found in Chapter 7.0 provides additional information on the response activities.

#### 6.2.1.2 External Communications

The WTP is equipped with devices for summoning emergency assistance from the Hanford Fire Department, the Hanford Hazardous Materials Response Team, or local emergency response teams, as necessary. External communication is via a telephone communication system. Telephones are available for staff use at numerous locations throughout the facility. Under no circumstances will only one staff member be at the WTP site. In addition, the current Hanford communication system is utilized as described in the *Hanford Emergency Management Plan* (DOE/RL-94-02), Section 5.2.

#### 6.2.1.3 Emergency Equipment

Portable fire extinguishers, fire control equipment, spill control equipment, and decontamination equipment are available to personnel at the WTP. A list of emergency and decontamination equipment is provided in the Contingency Plan, Chapter 7.0.

#### 6.2.1.4 Water for Fire Control

The primary water supply for fire protection is provided from the 200 East Area raw water distribution system. The fire water supply system comprises two water storage tanks designed to National Fire Protection Association (NFPA) 22, *Standard for Water Tanks for Private Fire Protection* (NFPA 1998); and Factory Mutual (FM) Data Sheet 3-2, *Water Tanks for Fire Protection* (FM 2001a). Each water storage tank is capable of supplying fire-water for a minimum of two hours at the maximum anticipated demand.

The pumping system is being designed to NFPA 20, *Standard for the Installation of Stationary Pumps for Fire Protection* (NFPA 1999a), and Factory Mutual Data Sheet 3-7N, *Stationary Pumps for Fire Protection* (FM 2001b). A fire pump is installed and connected to each water storage tank. Each pump is capable of providing the maximum system demand and is connected to the underground distribution system in a manner that prevents single failure from disabling both water supplies.

The underground distribution piping and valving is designed and installed according to NFPA 24, *Standard for Installation of Private Fire Service Mains and Their Appurtenances* (NFPA 1995); and Factory Mutual Data Sheet 3-10, *Installation and Maintenance of Private Fire Service Mains and Their Appurtenances* (FM 2000).

The distribution system in the various buildings and structures are being designed following the various appropriate codes and standards that apply to their specific occupancy. The standards include NFPA 13, *Standard for the Installation of Sprinkler Systems* (NFPA 1999b); NFPA 14, *Standard for the Installation of Standpipe, private Hydrant, and Hose Systems* (NFPA 2000); NFPA 15, *Standard for Water Spray Fixed Systems for Fire Protection* (NFPA 1996); and the appropriate Factory Mutual standards, as required.

## 6.3 Aisle Space Requirement

Aisle spacing will be maintained throughout the facility buildings to allow access of personnel and equipment responding to fires, spills, or other emergencies.

Evaluation of the 30-in. aisle spacing requirement by the United States Department of Energy, WTP, United States Environmental Protection Agency, and Ecology for immobilized low-activity waste (ILAW) and immobilized high-level waste (IHLW) containers/canisters concluded that aisle spacing in the range of 4 to 16 in. was adequate based on personnel safety and the immobilization of the waste.

Additional information about the ILAW and IHLW containers/canisters is located in Appendix 6A, Section 6A.4.1. Secondary wastes stored in container storage areas will meet the 30-inch minimum aisle space requirement.

## 6.4 Preventive Procedures, Structures, and Equipment

The following sections describe preventive procedures, structures, and equipment. Refer to Chapter 4.0 for additional information on feed transfer piping and tank overfill protection structures, equipment, and instrumentation.

### 6.4.1 Unloading/Loading Operations

Waste feed to be treated at the WTP is received from the double-shell tank system staging tank through underground waste transfer lines. These waste feed transfer lines are equipped with secondary containment; leak detection; and cathodic protection. During Direct Feed Low Activity Waste (DFLAW) configuration, the waste transfer lines have been designed to be isolated from the soil environment; thus, not requiring cathodic protection. The WTP will not receive waste for treatment in containers.

The filled ILAW and IHLW containers and canisters are loaded for transport using special shielding and heavy lifting equipment. The immobilized waste presents no hazards from spills, leaks, run-off, or chemical exposures to personnel from the dangerous waste constituents because the waste is solid (contains no free liquids) and the containers are permanently sealed.

Containers of secondary waste bound for transport to another treatment, storage, and disposal facility (TSD) will be packaged according to the federal, state, and local regulations, as detailed in Chapter 4.0, Process Information.

### 6.4.2 Runoff

Waste stored and treated inside the LAW & High Level Waste (HLW) facilities and Pretreatment Plant cannot come into contact with precipitation and therefore, cannot contaminate runoff from WTP structures, nor can precipitation enter secondary containment for the process and storage areas within the plants. Additionally, the process vessels located outside are surrounded by a concrete berm lined with a protective coating for secondary containment. The concrete berm will be designed to hold 100% of the capacity of the largest tank within the berm; in addition to, capable of containing the volume of a 24-hour rainfall as determined by a 25-year storm. Spills, leaks, or precipitation in the berm will be collected in a sump located within the bermed area and analyzed. Based on the analysis results, the waste may be containerized and managed as secondary waste or pumped back into the associated process.

### 6.4.3 Contamination of Water Supplies

The active portions of the facility are being designed with robust structural features such as thick, reinforced concrete floors and walls; secondary containment (lined with stainless steel or other protective coating); and off-gas treatment systems. The structural features alone are designed to prevent waste feed from contacting the environment. Operation of the WTP is also intended to prevent a release of waste to the environment. The WTP design, construction, and operation prevents waste feed and secondary waste from contaminating groundwater and drinking water supplies (see Chapter 4.0 for structural design information).

Raw and potable water is supplied to the WTP via separate underground lines from the 200 East Area water treatment and distribution system. Backflow preventers or interconnection breaks ensure that in the event water is contaminated at the WTP, the water cannot flow back into the water systems' sources. There will be no connections between potable water and raw water systems, or between the potable water system and piping that will contain mixed waste.

### 6.4.4 Equipment and Power Failures

Should there be a partial or total loss of electrical power to the WTP, automatic measures ensure the plant is in a safe operational configuration. Safe operational configuration is defined as a shutdown to minimal operations that prevents releases and prevents unnecessary damage to the equipment.

The emergency power system consists of two diesel turbine driven automatically controlled emergency generators and one standby diesel engine generator. The emergency and standby generators are connected to three separate 4.16kV emergency switchgears. The two emergency turbine generators support safety class systems in the Pretreatment and HLW facilities. The standby diesel generator supports the non-safety systems in the LAW facility. In the DFLAW configuration, emergency power will be reliant on uninterruptible power supply systems.

Upon loss of power the emergency diesel turbine generators automatically start. The emergency diesel turbine generators are capable of starting, accelerating, and being loaded with the design load in a specified time limit. The standby diesel generator is started manually or automatically in the event of a prolonged loss of offsite power. The emergency power system is connected to essential loads in order to ensure only a short-term power interruption for those loads designated as essential. Critical indications and controls are backed up by uninterruptible power supplies and batteries.

Egress lighting consists of self-contained fixtures with battery packs and charging systems. These lighting systems are located in stairways, exit routes, and fire alarm stations and activate automatically upon loss of normal power to the fixture. A selected part of the normal lighting operates as essential lighting, and provides a minimum level of illumination throughout the plant to aid in restoring the plant to normal operation. Essential lighting is powered by the emergency power system and is available whenever power supplies are interrupted.

Selected instrumentation and controls are unaffected by a loss of offsite power, since many of these instruments and controls are powered by uninterruptible power supply systems. The uninterruptible power supply systems are battery backed, and the battery chargers are connected to the emergency power supply. Emergency lighting, such as in the central control room, is connected to an uninterruptible power supply system. Radiation monitoring using continuous air monitors and area radiation monitors are also powered by these systems and continue operating during power failure.

### 6.4.5 Personal Protection Equipment

Facility design, operating practices, and administrative controls are the primary means of preventing personnel exposure to dangerous and mixed waste. The following practices, structures, and equipment are intended to minimize personnel exposure to chemicals, radioactive contamination, and radiation exposure:

- Remote operation and viewing.
- Active ventilation that moves air from uncontaminated zones to progressively more contaminated zones.
- Waste cutoff systems that automatically keep operations in a safe condition.
- Secondary containment for liquids.
- Offices, control rooms, change rooms, and lunchrooms that are situated to minimize casual exposure of personnel.

Before the start of an operation that might expose employees to the risk of injury or illness, a review of the operation is performed to ensure the appropriate protective gear is selected. Personnel are instructed to wear personal protective equipment in accordance with training, posting, and instructions. The inspection schedule for personal protective equipment is found in Table 6A-1; however, the specific items listed as personal protective equipment is in the Contingency Plan, Chapter 7.0, Table 7.5-4 and not duplicated here.

### 6.4.6 Prevent Releases to the Atmosphere

The WTP off-gas treatment systems are the primary means of preventing contaminated releases to the atmosphere. The procedures, structures, and equipment used in these systems are described in Chapter 4.0.

## 6.5 Prevention of Reaction of Ignitable, Reactive, and/or Incompatible Waste

While operating in the Direct Feed LAW configuration, WTP will not accept and/or treat mixed waste that carries the D001 (ignitable) waste code and/or the D003 (reactive) waste code. While operating in the baseline configuration, WTP may accept mixed waste that carries the D001 (ignitable) waste code and/or the D003 (reactive) waste code. Once waste has been received, process knowledge will be used to remove the D001 and D003 waste codes. Waste initially characterized as reactive and/or ignitable will only be stored in dangerous waste management units designed for these waste codes.

The following analyses, at a minimum, will be conducted for each new DFLAW feed campaign in accordance with the methods prescribed in WAC 173-303-110: ammonia, pH, metals, organic acids, mercury, cyanide, volatiles, semi-volatiles, PCBs/pesticides, anions, total organic carbon, and compatibility (American Society for Testing and Materials Method D5058-90). Additionally, an evaluation of the LAW feed will have been performed to ensure that it does not carry waste codes D001 (ignitability) and D003 (reactivity) when transferred to the LAW Facility.

Tanks

Dangerous waste codes assigned to the waste in the Double-Shell Tank System Dangerous Waste Part A Permit Application (DOE-RL 1996) apply to the waste feed the WTP receives. The waste feed includes the waste codes for ignitability (D001) and reactivity (D003), but the waste is not expected to exhibit the characteristics listed in WAC 173-303-090, Dangerous Waste Characteristics for these two waste codes. Based on past process knowledge that includes the age, temperature, history, and chemical composition of the waste feed stored in the DST system, the waste codes D001 and D003 will be removed by the WTP. Prior to receiving waste from the tank farms, waste must meet the criteria in the Waste Analysis Plan (Appendix 3A).

Containers

Small amounts of ignitable (D001) and reactive (D003) waste may be generated as secondary waste during maintenance and laboratory operations. Secondary waste streams that designate as ignitable and/or reactive are managed in accordance with administrative procedures. Storage of ignitable wastes are protected from sources of ignition or reaction. When ignitable waste is being handled, smoking and open flames are prohibited from the vicinity of the ignitable waste. Smoking is prohibited within the WTP process buildings and areas where dangerous waste is managed. In addition, “No smoking” signs are placed wherever a hazard exists from ignitable or reactive waste.

Large quantities of potentially incompatible waste are not expected to be generated through maintenance and laboratory operations. Administrative barriers will be put in place to prevent storage of incompatible waste within proximity to each other. For example, acids and bases are stored on separate portable secondary containment; oxidizers are stored in areas separate from combustible materials; and corrosive chemicals are stored on a separate secondary containment. In addition, storage areas are clearly marked with signs indicating appropriate waste type.

This page intentionally left blank.

# WASTE TREATMENT OF IMMOBILIZATION PLANT
# CHAPTER 6A
# INSPECTION PLAN

## CHANGE CONTROL LOG

Change Control Logs ensure that changes to this unit are performed in a methodical, controlled, coordinated, and transparent manner. Each unit addendum will have its own change control log with a modification history table. The "**Modification Number**" represents Ecology's method for tracking the different versions of the permit. This log will serve as an up to date record of modifications and version history of the unit.

Modification History Table

| Modification Date | Modification Number |
|---|---|
| 09/05/2017 | 8C.2017.6F |
| 08/2011 | |
| | |

This page intentionally left blank.

# CHAPTER 6A
# INSPECTION PLAN

This page intentionally left blank.

# CHAPTER 6A
# INSPECTION PLAN

## TABLE OF CONTENTS

6A.0 INSPECTION PLAN ..... 5
6A.1 General Inspection Requirements ..... 5
6A.1.1 Inspection Methods ..... 5
6A.1.2 Inspection Frequencies ..... 6
6A.1.3 Suspended Inspections ..... 6
6A.2 Inspection Log ..... 6
6A.3 Schedule for Remedial Action for Problems Revealed ..... 7
6A.3.1 Remedies ..... 7
6A.4 Specific Process or Waste Type Inspection Requirements ..... 7
6A.4.1 Container Inspections ..... 7
6A.4.2 Tank Systems Inspections, Assessments and Corrective Actions ..... 8
6A.4.2.1 Tank System Inspections ..... 8
6A.4.2.2 Tank System Integrity Assessments ..... 8
6A.4.2.3 Tank Systems – Corrective Actions ..... 8
6A.5 Storage of Ignitable or Reactive Wastes ..... 8
6A.6 Air Emissions Control and Detection ..... 9
6A.6.1 Air Emissions from Process Vents (Subpart AA) ..... 9
6A.6.2 Air Emission Standards for Equipment Leaks (Subpart BB) ..... 9
6A.6.3 Air Emission Standards for Tanks and Containers (Subpart CC) ..... 9

## TABLES

Table 6A-1 Example WTP General Inspection Schedule ..... 10
Table 6A-2 Example Canister and Container Storage Inspection Schedules ..... 11
Table 6A-3 Example Tank Systems and Ancillary Equipment Inspection Schedule ..... 13
Table 6A-4 Example Cathodic Protection Inspection Schedule-Dangerous Waste Transfer Lines ..... 19
Table 6A-5 Example Ignitable or Reactive Wastes Inspection Schedule ..... 19
Table 6A-6 Example Miscellaneous Treatment Unit Schedule ..... 20
Table 6A-7 Example Containment Buildings Inspection Schedule ..... 25

# ACRONYMS

| | |
|---|---|
| ALARA | As Low As Reasonably Achievable |
| EMF | Effluent Management Facility |
| HLW | High-Level Waste |
| IHLW | Immobilized HLW |
| ILAW | Immobilized LAW |
| LAW | Low-Activity Waste |
| WTP | Waste Treatment and Immobilization Plant |

# CHAPTER 6A
# INSPECTION PLAN

## 6A.0 INSPECTION PLAN

The following sections describe the Waste Treatment and Immobilization Plant (WTP) dangerous waste inspection plan. The WTP plan uses a graded approach to preventing and detecting malfunctions, deterioration, operator errors, and discharges that range from daily inspections to integrity assessments. This graded approach is comprised of activities that, at a minimum, meets the inspection requirements in Washington Administrative Code (WAC) 173-303-320 and includes more precautions for equipment at higher risk of failure. Monitoring via instrumentation will be used to perform remote inspections in areas of high radioactivity, including, but not limited to, the Pretreatment Areas, Low Activity Waste (LAW) vitrification area, Laboratory, Effluent Management Facility (EMF) and the High Level Waste (HLW) vitrification area. Due to the radioactive nature of the waste and consistent with as low as reasonably achievable (ALARA) principles, monitoring by instrumentation is the primary means of fulfilling the inspection requirements in these areas. The WTP also use cameras, windows, process control, function checks, and preventive maintenance to comply with inspection requirements.

The inspections for various facilities are provided in Table 6A-1 through Table 6A-7 of this inspection schedule. Each table addresses a particular dangerous waste management unit, or group of units, such as tanks. Within each dangerous waste management unit table, the inspections are presented by system, and are further broken down by individual component. Once a dangerous waste management unit receives dangerous and/or mixed waste, the inspection criteria and frequencies detailed in the tables for each specific unit (Table 6A-1 through 6A-7) will be active. Controlled copies of the inspection plan will be kept at the WTP facility.

The WTP has no waste pile units, surface impoundment units, incinerator units, landfill units, or land treatment facilities. The requirements for inspection of these units and activities are not applicable to the WTP and are not included in this inspection schedule.

## 6A.1 GENERAL INSPECTION REQUIREMENTS

This section describes general, WTP-wide inspection requirements used to help prevent, detect, or respond to environmental or human health hazards related to dangerous and/or mixed waste handling, treatment, and storage at the WTP.

### 6A.1.1 Inspection Methods

The method of inspection is how an inspection is to be performed. The three primary methods of inspection identified and required by this inspection plan are described below.

| Methods of Inspection | |
|---|---|
| Physical | An inspection conducted physically in person (e.g. maintenance or operator). A physical inspection requires the physical presence of the inspector at the item of inspection and is not to be confused with a remote inspection. Due to accessibility limitation, physical inspections may be conducted with the aid of instruments (e.g., borescope, mirrors) |
| Remote | An inspection conducted by one or all of the following methods: closed-circuit television, observation windows, control panels, process control system, or any other inspection that is not conducted physically in person. |
| Functional | An inspection conducted by operating or testing the item being inspected to determine if equipment/instrument is operating correctly and capable of performing its function. |

Due to the radioactive nature of the waste and consistent with ALARA principles, remote inspections are the primary method of conducting inspections for several facilities at WTP. Areas of higher radiation have been identified for all of the operating facilities, i.e. lab, Pretreatment, LAW vitrification area, HLW vitrification area and EMF. Unless otherwise stated in this permit, inspections of equipment, items, and systems are performed as physical inspections.

### 6A.1.2 Inspection Frequencies

The frequency of inspection is how often (at a minimum) an inspection must be performed. For the purposes of this inspection schedule, the various inspection frequencies have been established with sufficient conservatism to be protective of human health and the environment. The inspection frequencies most frequently used in this plan are outlined below.

| Inspection Frequencies | |
|---|---|
| **Frequency** | **Definition** |
| Daily | Once per calendar day |
| Weekly | Once per calendar week* |
| Monthly | Once per calendar month |
| Bimonthly | Once every other calendar month |
| Quarterly | Once per calendar quarter |
| Semi-Annual | Once per 6-month calendar period |
| Annually | At least once during a 12-month period +/- 30 days |

*Washington Administrative Code requires some dangerous waste inspections to be completed every 7 days. Affected inspections are identified in the Inspection Tables.

### 6A.1.3 Suspended Inspections

When a dangerous waste management unit is no longer receiving, managing, or treating waste, the unit's specific inspections may be suspended. During these situations, inspections can be suspended until the affected system is placed back into dangerous waste operation. Prior to resuming dangerous waste operations, "initial" inspections will be conducted when the system is brought back online and regularly scheduled inspections are resumed. Inspections detailed in Table 6A-1 cannot be suspended.

In the case an inspection has been suspended prior to the expiration of the next scheduled inspection, the inspection requirement is satisfied by performing the inspection prior to resuming dangerous waste operations. In the case of suspended daily inspections, the initial (restart) inspection satisfies the daily inspection requirement for that day. All suspended inspections will be documented in the inspection log described in Section 6A.2. The decision to suspend a permit required inspection requires verbal notification to the Department of Ecology.

## 6A.2 INSPECTION LOG

Inspection checklists will be used to document completion of the inspection schedule in this plan. These checklists will be records of the items contained in the inspection schedule and will be kept as a hardcopy or an electronic copy. Records of completed inspections will include the date and time of inspection; the legible, printed name and hand written signature of the inspector (or equivalent), a notation of the observations made, an account of spills or discharges and the date and nature of any repairs or remedial actions taken.

Personnel performing these inspections will be appropriately trained and qualified in the system being inspection as prescribed in Chapter 8.0, Personnel Training. When performing the inspection, the inspector will note all observations and deficiencies on the inspection sheet. Inspection deficiencies

discovered by the inspector and corrective actions that have been initiated are delegated to responsible individuals in the operations group. Completed and/or suspended inspection checklists are stored in the WTP operating record for at least 5 years from the date of the inspection.

## 6A.3 SCHEDULE FOR REMEDIAL ACTION FOR PROBLEMS REVEALED

### 6A.3.1 Remedies

Problems revealed by inspections will be corrected on a schedule that prevents hazards to the public health and environment. If inspections show that nonemergency maintenance is required, maintenance is completed as soon as possible to prevent further damage and to reduce the need for subsequent emergency response. Non-emergency corrective actions will be initiated within 24 hours if possible; however, additional response time may be required because of the radioactive component of the waste being managed at the WTP. Where a hazard is imminent or has already occurred, remedial actions are taken immediately to prevent equipment damage and prevent hazards to human health and the environment.

If an inspection identifies a fire, explosion, or release involving a dangerous waste, or an imminent hazard to human health or the environment, the WTP Contingency Plan, Chapter 7.0, is followed.

## 6A.4 SPECIFIC PROCESS OR WASTE TYPE INSPECTION REQUIREMENTS

### 6A.4.1 Container Inspections

The WTP will store immobilized low-activity waste (ILAW) in containers and immobilized high-level waste (IHLW) in canisters, and secondary dangerous and mixed waste in containers. For purposes of IHLW, the term canisters are used to specifically address the unique disposal requirements of the filled containers. Throughout this section, general references to containers also applies to the IHLW canisters. Inspections of container storage areas will be performed weekly when waste is in the storage areas.

Immobilized Low-Activity Containers and High-Level Waste Canisters

Filled ILAW containers and IHLW canisters will be radioactive and thus, inspections must be performed remotely. Therefore, in lieu of conventional container inspections while the containers are in storage, each container will be inspected before and after filling, and when it is moved into and out of the ILAW and IHLW containment buildings or container storage areas. The containers will not contain free liquids, will be chemically and physically stable (not ignitable or reactive), and will have either a welded closure (IHLW) or pressed fitted closure seal (ILAW). The IHLW canisters will be placed in special racks inside the storage areas that will prevent them from toppling.

The WTP will inspect the ILAW and IHLW container storage or containment building areas, when they are in use, weekly by remote means. As specified in III.10.D.4.b.ii, these remotely managed storage areas are exempt from the 30-inch aisle spacing. ILAW and IHLW containers/canisters aisle spacing is anticipated to be in the range of 4 to 16 inches, as described in Chapter 4E.1.2.1 and 4F.1.2.1, respectively. Table 6A-2 details the methods and criteria used to inspect the ILAW containers and IHLW canisters.

The dangerous waste container labeling requirements will be met by using a unique alphanumeric identifier that will be welded to each container. Deterioration of the identifier is not expected due to the permanent nature of these markings and provisions for subsequent handling that will safeguard against damage to the containers and the identifying marks.

Using the identification on each container, a tracking system will record key movements of each immobilized waste container through the facility. Information about the waste canister tracking system is in Chapter 4.0. For each container of ILAW and IHLW produced, the system will track the following:

- The location of each container in process and storage areas

- The date that waste was first placed in the container
- The date the container was shipped from the facility, and its destination
- The nature of waste in the container, including dangerous waste designation codes, and land disposal restriction requirements

Secondary and Miscellaneous Waste in Containers

Secondary waste refers to newly generated waste (or a waste by-product from treating the Hanford tanks waste) that is designated as dangerous waste or mixed waste. Secondary waste will be generated at the WTP, for example, waste associated with laboratory activities, maintenance activities and failed contaminated equipment.

### 6A.4.2 Tank Systems Inspections, Assessments and Corrective Actions

#### 6A.4.2.1 Tank System Inspections

A description of the tank systems, and their safety and interlock controls, at the WTP can be found in Chapter 4. Access to regulated tanks for inspection and integrity assessments must be consistent with keeping radiation exposure ALARA. Each tank or grouping of identical tanks is shown as a line item in the inspection schedule, Table 6A-3. Each inspection item includes a description of problems to look for and the frequency of inspection. The inspection will address the tanks overfill and spill control equipment, data gathered from monitoring and leak detection equipment, construction materials, the area immediately surrounding the externally accessible portion of the tank as well as secondary containment system.

#### 6A.4.2.2 Tank System Integrity Assessments

Periodic integrity assessments will be performed over the life of the regulated tank systems to assure they retain their structural integrity and will not collapse, rupture, or fail. The frequency of integrity assessments will be based on the potential for corrosion and erosion. The classification system allows extra assessment efforts to be focused on tank system that may have the highest potential consequences if failure or loss of containment should occur.

Assessment of equipment with lower potential for corrosion and erosion with accessible areas or hot cells is made during the routine or maintenance outages and within 10 years after start of hot commissioning at selected accessible points where baseline Non-Destructive Examination (NDE) measurements had been taken. Subsequent integrity assessments will be based on the results of previous integrity assessments, the age of the equipment, materials of construction, characteristics of the waste, and any other relevant factors, but there will be no more than 10 years between integrity assessments.

Assessment of equipment with higher potential for corrosion and erosion within accessible areas is made during routine or maintenance outages and within 7 years after the start of hot commissioning at selected accessible points where baseline NDE measurements had been taken. Subsequent integrity assessments will be based on the results of previous integrity assessments, the age of the equipment, materials of construction, characteristics of the waste, and any other relevant factors but there will be no more than 7 years between integrity assessments.

#### 6A.4.2.3 Tank Systems – Corrective Actions

If a leak or spill of dangerous and/or mixed waste is detected in a secondary containment system during the course of an inspection, the permittee will follow the remedial actions found in permit conditions III.10.E.5.i.i through III.10.E.5.i.v.

## 6A.5 STORAGE OF IGNITABLE OR REACTIVE WASTES

Small amounts of ignitable (D001) and reactive (D003) waste may be generated as secondary waste during maintenance and laboratory operations. Management of this waste will be performed either in Lab

Pack Room (A-0139A) or Waste Drum Management Room (A-0139), in accordance with WAC 173-303-395. Annual inspections of all areas managing D001 and D003 waste will be conducted by personnel familiar with the International Fire Code, or in the presence of the local, state, or federal fire marshal. The date and time of the inspection, the name of the inspector or fire marshal, a notation of the observation made, and any remedial actions, will be documented in the inspection log.

## 6A.6 AIR EMISSIONS CONTROL AND DETECTION

### 6A.6.1 Air Emissions from Process Vents (Subpart AA)

The WTP does not use any of the regulated devices or processes listed; therefore, the WTP will not be subject to regulation under Subpart AA (40 CFR 264).

### 6A.6.2 Air Emission Standards for Equipment Leaks (Subpart BB)

The WAC 173-303-691 and Subpart BB (40 CFR 264) applies to equipment that contains or contacts hazardous wastes with organic concentrations of at least 10 percent by weight. This provision will not apply to the facility because the WTP will not accept or treat wastes with organic concentrations at or above 10 percent by weight. Compliance with this provision will be documented through analyses of verification samples, as described in the Waste Analysis Plan.

### 6A.6.3 Air Emission Standards for Tanks and Containers (Subpart CC)

The regulations specified under WAC 173-303-692 and 40 CFR Part 264 Subpart CC, incorporated by reference, do not apply to the WTP mixed waste tank systems and containers. These tanks and containers qualify as waste management units that are "used solely for the management of radioactive dangerous waste in accordance with all applicable regulations under the authority of the Atomic Energy Act and the Nuclear Waste Policy Act" and are excluded under WAC 173-303-692(1)(b)(vi).

Containers or tanks bearing nonradioactive, dangerous waste, such as maintenance and laboratory waste, that are not excluded under WAC 173-303-692(1)(b)(ii) or 40 CFR 264.1082(c), will comply with the container and tank standards specified under 40 CFR part 264 Subpart CC.

**Table 6A-1 Example WTP General Inspection Schedule**

| Component Name | Inspection | Frequency |
|---|---|---|
| **Security Devices** | | |
| WTP inner fence | Check for damaged fencing | Monthly |
| Posted warning signs (see Chapter 6.0, section 1.2) that say: "DANGER - UNAUTHORIZED PERSONNEL KEEP OUT" | Verify signs are present, legible from a distance of 25 ft, and visible; ensure buildings or rooms containing dangerous or mixed waste are posted | Monthly |
| Points of access to active portions turnstiles, doors, and/or magnetic encoded bar readers | Verify operability | Monthly |
| **Emergency Preparedness Equipment** | | |
| Safety showers and eyewash stations | Verify operability and sufficient pressure | At least every seven days |
| Automatic fire suppression system(s) | Verify operability | Annually |
| Portable fire extinguishers (all types) | Check for adequate charge | Monthly |
| Emergency lighting | Test operability | Monthly |
| Spill kit and spill control equipment | Verify contents complete | Quarterly |
| Emergency sirens and alarms | Verify operability | Monthly |
| Voice paging system (pagers or PA system) | Verify operability | Monthly |
| Emergency telephones | Verify operability | Monthly |
| Personal protective clothing and equipment | Ensure supplies meet ERP listing and requirements | Quarterly |
| **Power Supply Inspections** | | |
| Emergency uninterruptible power supply system(s) | Verify operability | Annual |
| Emergency diesel generator | Perform no-load test and verify sufficient fuel | Annual |

**Table 6A-2 Example Canister and Container Storage Inspection Schedules**

| Name | Inspection | Frequency |
|---|---|---|
| **Dangerous and/or Mixed Waste Container Storage Inspections** | | |
| • HLW East corridor El. 0 ft (HC-0108/09/10)<br>• HLW Loading Area (H-0130)<br>• Lab Pack Room (A-0139A)<br>• Waste Drum Management Room (A-0139)<br>• Non-radioactive dangerous waste container storage area<br>• Failed melter storage facility<br>• Container storage in HLW, PTF, and LAW Containment Building described in Table III.10.D.A | Verify major risk labels present and legible, ensure all containers are closed (except when waste is being added to container);<br>Check that container storage areas are free of liquid and debris;<br>Check for significant cracks, gaps, and other signs of deterioration of storage area floors;<br>Verify minimum 30 inches of aisle space between containers, except for IHLW canisters and ILAW containers;<br>Verify that any dangerous and or mixed waste container holding free liquids have portable secondary containment and no liquids accumulated in portable secondary containment | At least every seven days |
| **Immobilized ILAW Container Storage in Containment Buildings** | | |
| ILAW containers | Inspect that unique alphanumeric identifier is welded to ILAW container and is legible | Prior to placing in storage |
| Filled ILAW containers [1] | Inspect (visually, by camera surveillance, or cell window) each container for cracks, leaks, bulges, or other abnormalities | After sealing container |
| | Record in tracking system each container's location when placed in storage;<br>Record in tracking system all container location changes if container(s) are moved while in storage;<br>Verify container in recorded location when transporting container out of WTP storage. | Within 48 hours of placing or moving each container |
| Container Monitoring/Export Areas (L-0109E and L-0115E) | Inspect (visually, by camera surveillance, or cell window) for deformities in storage area floors or debris in storage area | At least every seven days when facility is storing waste in immobilized waste container monitoring/export area |
| **HLW Vitrification Plant Canister Storage Area** | | |
| IHLW canisters | Inspect that unique alphanumeric identifier is welded to IHLW canister and is legible | Prior to placing in storage |

**Table 6A-2 Example Canister and Container Storage Inspection Schedules**

| Name | Inspection | Frequency |
|---|---|---|
| Filled IHLW Canister [1] | Inspect (visually, by camera surveillance, or cell window) each canister for cracks, leaks, bulges, or other abnormalities | After sealing canister |
| | Record in tracking system each canister's location when placed in storage;<br>Record in tracking system all canister location changes if canister(s) are moved while in storage;<br>Verify canister in recorded location when transporting canister out of WTP storage. | Within 48 hours of placing or moving each canister |
| IHLW Canister Storage Cave (H-0132) | Inspect (visually, by camera surveillance, or cell window) for deformities in storage area floors or debris in storage area | At least every seven days when facility is storing waste in immobilized waste canister storage area |

[1] Direct access to container of ILAW and IHLW for the purposes of inspection is precluded due to high radioactivity levels. Therefore, ILAW and IHLW containers are exempt from the 30-inch aisle requirements (III.10.D.4.b.ii).

**Table 6A-3 Example Tank Systems and Ancillary Equipment Inspection Schedule**

| Component Name | Plant item number | Inspection | Frequency |
|---|---|---|---|
| **Pretreatment Plant Tank System** | | | |
| **FRP** | | | |
| Waste feed receipt vessels | FRP-VSL-00002A<br>FRP-VSL-00002B<br>FRP-VSL-00002C<br>FRP-VSL-00002D | Inspect tank level monitoring data to prevent overflow | Daily |
| **FEP** | | | |
| Waste feed evaporator feed vessels | FEP-VSL-00017A<br>FEP-VSL-00017B | Inspect tank level monitoring data to prevent overflow | Daily |
| Waste feed evaporator condensate vessel | FEP-VSL-00005 | Inspect tank level monitoring data to prevent overflow | Daily |
| **HLP** | | | |
| HLW Lag storage vessel | HLP-VSL-00027A<br>HLP-VSL-00027B | Inspect tank level monitoring data to prevent overflow | Daily |
| HLW feed receipt vessel | HLP-VSL-00022 | Inspect tank level monitoring data to prevent overflow | Daily |
| HLW feed blend vessel | HLP-VSL-00028 | Inspect tank level monitoring data to prevent overflow | Daily |
| **UFP** | | | |
| Ultrafiltration feed preparation vessels | UFP-VSL-00001A<br>UFP-VSL-00001B | Inspect tank level monitoring data to prevent overflow | Daily |
| Ultrafiltration feed vessels | UFP-VSL-00002A<br>UFP-VSL-00002B | Inspect tank level monitoring data to prevent overflow | Daily |
| Ultrafilter permeate collection vessel | UFP-VSL-00062A<br>UFP-VSL-00062B<br>UFP-VSL-00062C | Inspect tank level monitoring data to prevent overflow | Daily |
| Ultrafilters | UFP-FILT-00001A<br>UFP-FILT-00001B<br>UFP-FILT-00002A<br>UFP-FILT-00002B<br>UFP-FILT-00003A<br>UFP-FILT-00003B<br>UFP-FILT-00004A<br>UFP-FILT-00004B<br>UFP-FILT-00005A<br>UFP-FILT-00005B | Inspect tank level monitoring data to prevent overflow | Daily |

**Table 6A-3 Example Tank Systems and Ancillary Equipment Inspection Schedule**

| Component Name | Plant item number | Inspection | Frequency |
|---|---|---|---|
| **CXP** | | | |
| Cesium ion exchange feed vessel | CXP-VSL-00001 | Inspect tank level monitoring data to prevent overflow | Daily |
| Cesium ion exchange columns | CXP-IXC-00001<br>CXP-IXC-00002<br>CXP-IXC-00003<br>CXP-IXC-00004 | Inspect column monitoring data to prevent release | Daily |
| Cesium reagent vessel | CXP-VSL-00005 | Inspect tank level monitoring data to prevent overflow | Daily |
| Cesium ion exchange caustic rinse collection vessel | CXP-VSL-00004 | Inspect tank level monitoring data to prevent overflow | Daily |
| Cesium ion exchange treated LAW collection vessels | CXP-VSL-00026A<br>CXP-VSL-00026B<br>CXP-VSL-00026C | Inspect tank level monitoring data to prevent overflow | Daily |
| **CNP** | | | |
| Cesium evaporator eluate lute vessel | CNP-VSL-00001 | Inspect tank level monitoring data to prevent overflow | Daily |
| Cesium evaporator recovered nitric acid vessel | CNP-VSL-00004 | Inspect tank level monitoring data to prevent overflow | Daily |
| Eluate contingency storage vessel | CNP-VSL-00003 | Inspect tank level monitoring data to prevent overflow | Daily |
| **PVP** | | | |
| Vessel ventilation HEME drain collection vessel | PVP-VSL-00001 | Inspect tank level monitoring data to prevent overflow | Daily |
| **PWD** | | | |
| Ultimate overflow vessel | PWD-VSL-00033 | Inspect tank level monitoring data to prevent overflow | Daily |
| Plant wash vessel | PWD-VSL-00044 | Inspect tank level monitoring data to prevent overflow | Daily |
| Acidic/alkaline effluent vessel | PWD-VSL-00015 | Inspect tank level monitoring data to prevent overflow | Daily |
| Acidic/alkaline effluent vessel | PWD-VSL-00016 | Inspect tank level monitoring data to prevent overflow | Daily |

**Table 6A-3 Example Tank Systems and Ancillary Equipment Inspection Schedule**

| Component Name | Plant item number | Inspection | Frequency |
|---|---|---|---|
| C3 floor drains tank | PWD-VSL-00046 | Inspect tank level monitoring data to prevent overflow | Daily |
| HLW effluent transfer vessel | PWD-VSL-00043 | Inspect tank level monitoring data to prevent overflow | Daily |
| **TLP** | | | |
| Treated LAW evaporator condensate vessel | TLP-VSL-00002 | Inspect tank level monitoring data to prevent overflow | Daily |
| LAW SBS condensate receipt vessel | TLP-VSL-00009A<br>TLP-VSL-00009B | Inspect tank level monitoring data to prevent overflow | Daily |
| **TCP** | | | |
| Treated LAW concentrate storage vessel | TCP-VSL-00001 | Inspect tank level monitoring data to prevent overflow | Daily |
| **RDP** | | | |
| Spent resin slurry vessels | RDP-VSL-00002A<br>RDP-VSL-00002B<br>RDP-VSL-00002C | Inspect tank level monitoring data to prevent overflow | Daily |
| Spent resin dewatering moisture separation vessel | RDP-VSL-00004 | RESERVED | Daily |
| **RLD** | | | |
| Process condensate vessels | RDP-TK-00006A<br>RDP-TK-00006B | Inspect tank level monitoring data to prevent overflow | Daily |
| Alkaline effluent vessels | RLD-VSL-00017A<br>RLD-VSL-00017B | Inspect tank level monitoring data to prevent overflow | Daily |
| **PIH** | | | |
| Decontamination soak tank | PIH-TK-00001 | Inspect tank level monitoring data to prevent overflow | Daily |
| **LAW Vitrification Plant Tank System** | | | |
| **LCP** | | | |
| LAW Melter 1 concentrate receipt vessel | LCP-VSL-00001 | Inspect tank level monitoring data to prevent overflow | Daily |

**Table 6A-3 Example Tank Systems and Ancillary Equipment Inspection Schedule**

| Component Name | Plant item number | Inspection | Frequency |
|---|---|---|---|
| LAW Melter 2 concentrate receipt vessel | LCP-VSL-00002 | Inspect tank level monitoring data to prevent overflow | Daily |
| **LFP** | | | |
| Melter 1 feed preparation vessel | LFP-VSL-00001 | Inspect tank level monitoring data to prevent overflow | Daily |
| Melter 1 feed vessel | LFP-VSL-00002 | Inspect tank level monitoring data to prevent overflow | Daily |
| Melter 2 feed preparation vessel | LFP-VSL-00003 | Inspect tank level monitoring data to prevent overflow | Daily |
| Melter 2 feed vessel | LFP-VSL-00004 | Inspect tank level monitoring data to prevent overflow | Daily |
| **LVP** | | | |
| LAW caustic collection tank | LVP-TK-00001 | Inspect tank level monitoring data to prevent overflow | Daily |
| **LOP** | | | |
| LAW Melter 1 SBS condensate vessel | LOP-VSL-00001 | Inspect tank level monitoring data to prevent overflow | Daily |
| LAW Melter 2 SBS condensate vessel | LOP-VSL-00002 | Inspect tank level monitoring data to prevent overflow | Daily |
| **RLD** | | | |
| Plant wash vessel | RLD-VSL-00003 | Inspect tank level monitoring data to prevent overflow | Daily |
| C3/C5 drains/sump collection vessel | RLD-VSL-00004 | Inspect tank level monitoring data to prevent overflow | Daily |
| SBS condensate collection vessel | RLD-VSL-00005 | Inspect tank level monitoring data to prevent overflow | Daily |
| **HLW Vitrification Plant Tank System** | | | |
| **HOP** | | | |
| Melter 1 SBS condensate receiver vessel 1 | HOP-VSL-00903 | Inspect tank level monitoring data to prevent overflow | Daily |
| Melter 2 SBS condensate receiver vessel 2 | HOP-VSL-00904 | Inspect tank level monitoring data to prevent overflow | Daily |

**Table 6A-3 Example Tank Systems and Ancillary Equipment Inspection Schedule**

| Component Name | Plant item number | Inspection | Frequency |
|---|---|---|---|
| **HDH** | | | |
| Canister decon vessel 1 | HDH-VSL-00002 | Inspect tank level monitoring data to prevent overflow | Daily |
| Canister decon vessel 2 | HDH-VSL-00004 | Inspect tank level monitoring data to prevent overflow | Daily |
| Waste neutralization vessel | HDH-VSL-00003 | Inspect tank level monitoring data to prevent overflow | Daily |
| Canister rinse vessel | HDH-VSL-00001 | Inspect tank level monitoring data to prevent overflow | Daily |
| **RLD** | | | |
| Acidic waste vessel | RLD-VSL-00007 | Inspect tank level monitoring data to prevent overflow | Daily |
| Plant wash and drains vessel | RLD-VSL-00008 | Inspect tank level monitoring data to prevent overflow | Daily |
| Offgas drains collection vessel | RLD-VSL-00002 | Inspect tank level monitoring data to prevent overflow | Daily |
| **HFP** | | | |
| HLW Melter 1 feed preparation vessel | HFP-VSL-00001 | Inspect tank level monitoring data to prevent overflow | Daily |
| HLW Melter 2 feed preparation vessel | HFP-VSL-00005 | Inspect tank level monitoring data to prevent overflow | |
| HLW Melter 1 feed vessel | HFP-VSL-00002 | Inspect tank level monitoring data to prevent overflow | Daily |
| HLW Melter 2 feed vessel | HFP-VSL-00006 | Inspect tank level monitoring data to prevent overflow | |
| **HSH** | | | |
| Decontamination Tank Melter cave 1 | HSH-TK-00001 | Inspect tank level monitoring data to prevent overflow | Daily |
| Decontamination Tank Melter cave 2 | HSH-TK-00002 | Inspect tank level monitoring data to prevent overflow | Daily |

**Table 6A-3 Example Tank Systems and Ancillary Equipment Inspection Schedule**

| Component Name | Plant item number | Inspection | Frequency |
|---|---|---|---|
| **Analytical Laboratory Tank System** | | | |
| **RLD** | | | |
| Lab area sink drain collection vessel | RLD-VSL-00164 | Inspect tank level monitoring data to prevent overflow | Daily |
| Hot cell drain collection vessel | RLD-VSL-00165 | Inspect tank level monitoring data to prevent overflow | Daily |
| **Effluent Management Facility Tank System** | | | |
| Evaporator Process System Vessels | DEP-VSL-00001<br>DEP-VSL-00002 | Inspect tank level monitoring data to prevent overflow | Daily |
| Evaporator Discharge System Vessels | DEP-VSL-00003A<br>DEP-VSL-00003B<br>DEP-VSL-00003C | Inspect tank level monitoring data to prevent overflow | Daily |
| | DEP-VSL-00004A<br>DEP-VSL-00004B | Inspect tank level monitoring data to prevent overflow | Daily |
| | DEP-VSL-00005A<br>DEP-VSL-00005B | Inspect tank level monitoring data to prevent overflow | Daily |
| **Primary Containment Sumps as identified the WTP Permit (Reserved)** | | | |
| **Secondary Containment** | | | |
| Leak detectors for all tank systems, miscellaneous units, and containment buildings managing dangerous and/or mixed waste | See Chapter 4.0 | Monitor leak detection instrumentation or monitoring data to detect leaks | Daily |
| **Underground Piping (receiving from DST and transferring out)** | | | |
| Leak detectors | | Monitor leak detection instrumentation or monitoring data to detect leaks | Daily |

**Table 6A-4 Example Cathodic Protection Inspection Schedule-Dangerous Waste Transfer Lines**

| Component Name and Line Number | Inspection | Frequency |
|---|---|---|
| Cathodic protection systems for dangerous and mixed waste transfer lines | Verify proper operation | Initial (less than 6 months after installation)<br>Annually (from date of initial installation inspection, above) |
| All sources of impressed current supporting cathodically protected dangerous and mixed waste transfer lines | Test for proper function | Bi-monthly |

**Table 6A-5 Example Ignitable or Reactive Wastes Inspection Schedule**

| Component Name | Inspection | Frequency |
|---|---|---|
| | | |
| Container storage areas storing ignitable or reactive waste | Inspect, by professional person or in the presence of fire marshal for compliance with Uniform Fire Code and enter inspection into operating record.<br>Inspect container storage areas for compliance with WAC 173-303-630 (8) requirements. | 365 days |

**Table 6A-6 Example Miscellaneous Treatment Unit Schedule**

| Component Name | Plant Item Number | Inspection | Frequency |
|---|---|---|---|
| **Pretreatment Facility Miscellaneous Treatment Unit Systems** | | | |
| **TLP** | | | |
| Treated LAW evaporator separator vessel | TLP-SEP-00001 | Inspect vessel level monitoring data to prevent overflow | Daily |
| Treated LAW Reboiler | TLP-RBLR-00001 | TBD | TBD |
| Treated LAW Primary Condenser | TLP-COND-00001 | TBD | TBD |
| Treated LAW Inter-Condenser | TLP-COND-00003 | TBD | TBD |
| Treated LAW After-Condenser | TLP-COND-00002 | TBD | TBD |
| **FEP** | | | |
| Waste Feed Evaporator Separator Vessels | FEP-SEP-00001A<br>FEP-SEP-00001B | TBD | TBD |
| Waste Feed Evaporator Reboilers | FEP-RBLR-00001A<br>FEP-RBLR-00001B | TBD | TBD |
| Waste Feed Evaporator Primary Condensers | FEP-COND-00001A<br>FEP-COND-00001B | TBD | TBD |
| Waste Feed Evaporator Inter-Condensers | FEP-COND-00002A<br>FEP-COND-00002B | TBD | TBD |
| Waste Feed Evaporator After-Condensers | FEP-COND-00003A<br>FEP-COND-00003B | TBD | TBD |
| **PJV** | | | |
| PJV Primary HEPA filters | PJV-HEPA-00001A<br>PJV-HEPA-00001B<br>PJV-HEPA-00001C<br>PJV-HEPA-00001D<br>PJV-HEPA-00001E<br>PJV-HEPA-00001F<br>PJV-HEPA-00001G | TBD | TBD |
| PJV Secondary Exhaust HEPA filters | PJV-HEPA-00002A<br>PJV-HEPA-00002B<br>PJV-HEPA-00002C<br>PJV-HEPA-00002D<br>PJV-HEPA-00002E<br>PJV-HEPA-00002F | TBD | TBD |
| PJV Exhaust fans | PJV-FAN-00001A<br>PJV-FAN-00001B<br>PJV-FAN-00001C | TBD | TBD |

**Table 6A-6 Example Miscellaneous Treatment Unit Schedule**

| Component Name | Plant Item Number | Inspection | Frequency |
|---|---|---|---|
| PJV Demisters | PJV-DMST-00002A<br>PJV-DMST-00002B<br>PJV-DMST-00002C | TBD | TBD |
| **PVP** | | | |
| Electric heaters | PVP-HTR-00001A<br>PVP-HTR-00001B<br>PVP-HTR-00001C | TBD | TBD |
| Vessel Vent After-cooler | PVP-CLR-00001 | TBD | TBD |
| Vessel Vent Carbon Bed Adsorbers | PVP-ADBR-00001A<br>PVP-ADBR-00001B | TBD | TBD |
| Vessel Vent VOC Oxidizer unit | PVP-OXID-00001 | TBD | TBD |
| Vessel Vent Adsorber Outlet filters | PVP-FILT-00001 | TBD | TBD |
| Vessel Vent HEME (mist eliminator) | PVP-HEME-00001A<br>PVP-HEME-00001B<br>PVP-HEME-00001C | TBD | TBD |
| Vessel Vent Scrubbing Liquid Cooler | PVP-HX-00002 | TBD | TBD |
| Vessel Vent Caustic Scrubber | PVP-SCB-00002 | TBD | TBD |
| **PVV** | | | |
| Vessel Vent HEPA primary filters | PVV-HEPA-00001A<br>PVV-HEPA-00001B | TBD | TBD |
| Vessel Vent HEPA secondary filters | PVV-HEPA-00002A<br>PVV-HEPA-00002B | TBD | TBD |
| Vessel Vent Exhaust fans | PVV-FAN-00001A<br>PVV-FAN-00001B | TBD | TBD |
| **CNP** | | | |
| Cesium evaporator Separator Vessel | CNP-EVAP-00001 | TBD | TBD |
| Cesium evaporator concentrate reboiler | CNP-HX-00001 | TBD | TBD |
| Cesium evaporator nitric acid rectifier column | CNP-DISTC-00001 | TBD | TBD |
| Cesium evaporator primary condenser | CNP-HX-00002 | TBD | TBD |
| Cesium evaporator inter-condenser | CNP-HX-00003 | TBD | TBD |
| Cesium evaporator after-condenser | CNP-HX-00004 | TBD | TBD |

**Table 6A-6 Example Miscellaneous Treatment Unit Schedule**

| Component Name | Plant Item Number | Inspection | Frequency |
|---|---|---|---|
| **LAW Vitrification Plant Miscellaneous Treatment Unit Subsystems** | | | |
| **LMP** | | | |
| LAW Melter 1<br>LAW Melter 2 | LMP-MLTR-00001<br>LMP-MLTR-00002 | Visual inspection (via cave window or CCTV if provided) for damage, leaks, or abnormalities<br>Inspect melter level monitoring data to prevent overflow | Daily |
| **LOP** | | | |
| Melter 1 and melter 2 submerged bed scrubbers | LOP-SCB-00001<br>LOP-SCB-00002 | TBD | TBD |
| Melter 1 and melter 2 wet electrostatic precipitators | LOP-WESP-00001<br>LOP-WESP-00002 | TBD | TBD |
| Primary/standby film coolers | LOP-FCLR-00001<br>LOP-FCLR-00002<br>LOP-FCLR-00003<br>LOP-FCLR-00004 | TBD | TBD |
| **LVP** | | | |
| Melter Offgas Caustic scrubber | LVP-SCB-00001 | TBD | TBD |
| Melter Offgas HEPA filters | LVP-HEPA-00001A<br>LVP-HEPA-00001B<br>LVP-HEPA-00002A<br>LVP-HEPA-00002B<br>LVP-HEPA-00003A | TBD | TBD |
| Thermal catalytic oxidizer | LVP-SCO-00001 | TBD | TBD |
| $NO_x$selective catalytic reduction unit | LVP-SCR-00001 | TBD | TBD |
| Melter Offgas HEPA Preheaters | LVP-HTR-00001A<br>LVP-HTR-00001B | TBD | TBD |
| Catalytic oxidizer electric heater | LVP-HTR-00002 | TBD | TBD |
| Catalytic oxidizer heat recovery unit | LVP-HX-00001 | TBD | TBD |
| Offgas Mercury Adsorbers | LVP-ADBR-0000A1/1B | TBD | TBD |
| Melter Offgas Exhausters | LVP-EXHR-00001A<br>LVP-EXHR-00001B<br>LVP-EXHR-00001C | TBD | TBD |

**Table 6A-6 Example Miscellaneous Treatment Unit Schedule**

| Component Name | Plant Item Number | Inspection | Frequency |
|---|---|---|---|
| **HLW Vitrification Plant Miscellaneous Treatment Unit Subsystems** | | | |
| **HMP** | | | |
| HLW Melter 1 | HMP-MLTR-00001 | Visual inspection (via cave window or CCTV if provided) for damage, leaks, or abnormalities<br>Inspect melter level monitoring data to prevent overflow | Daily |
| HLW Melter 2 | HMP-MLTR-00002 | | |
| **HOP** | | | |
| Submerged Bed Scrubber | HOP-SCB-00001<br>HOP-SCB-00002 | TBD | TBD |
| Wet Electrostatic Precipitators (WESP) | HOP-WESP-00001<br>HOP-WESP-00002 | TBD | TBD |
| Thermal Catalytic Oxidizer | HOP-SCO-00001<br>HOP-SCO-00004 | TBD | TBD |
| NOx Selective Catalytic Reduction Units | HOP-SCR-00001<br>HOP-SCR-00002 | TBD | TBD |
| Silver Mordenite Columns | HOP-ABS-00002<br>HOP-ABS-00003 | TBD | TBD |
| HEPA Filters | HOP-HEPA-00001A<br>HOP-HEPA-00001B<br>HOP-HEPA-00002A<br>HOP-HEPA-00002B<br>HOP-HEPA-00007A<br>HOP-HEPA-00007B<br>HOP-HEPA-00008A<br>HOP-HEPA-00008B | TBD | TBD |
| Melter Offgas Film Coolers | HOP-FCLR-00001/3<br>HOP-FCLR-00002/4 | TBD | TBD |
| Catalyst Skid Preheaters | HOP-HX-00001<br>HOP-HX-00003 | TBD | TBD |
| HEPA Preheaters | HOP-HTR-00001B<br>HOP-HTR-00002A<br>HOP-HTR-00005A<br>HOP-HTR-00005B | TBD | TBD |
| Catalyst Skid Electric Heaters | HOP-HTR-00007<br>HOP-HTR-00001 | | |
| Silver Mordenite Preheaters | HOP-HX-00002<br>HOP-HX-00004 | TBD | TBD |

**Table 6A-6 Example Miscellaneous Treatment Unit Schedule**

| Component Name | Plant Item Number | Inspection | Frequency |
|---|---|---|---|
| Stack Extraction Fans | HOP-FAN-00008A<br>HOP-FAN-00008B<br>HOP-FAN-00008C<br>HOP-FAN-00010A<br>HOP-FAN-00010B<br>HOP-FAN-00010C | TBD | TBD |
| Booster Extraction Fans | HOP-FAN-00001A<br>HOP-FAN-00001B<br>HOP-FAN-00001C<br>HOP-FAN-00009A<br>HOP-FAN-00009B<br>HOP-FAN-00009C | TBD | TBD |
| Activated Carbon Adsorber | HOP-ADBR-00001A<br>HOP-ADBR-00001B<br>HOP-ADBR-00002A<br>HOP-ADBR-00002B | TBD | TBD |
| High Efficiency Mist Eliminators (HEME) | HOP-HEME-00001A<br>HOP-HEME-00001B<br>HOP-HEME-00002A<br>HOP-HEME-00002B | TBD | TBD |
| **PJV** | | | |
| PJV HEPA Filters | PJV-HEPA-00004A<br>PJV-HEPA-00004B<br>PJV-HEPA-00005A<br>PJV-HEPA-00005B | TBD | TBD |
| Pulse Ventilation HEPA Electric Preheater | PJV-HTR-00002 | TBD | TBD |
| Pulse Vent Extraction Fans | PJV-FAN-00002A<br>PJV-FAN-00002B | TBD | TBD |
| **Effluent Management Facility Miscellaneous Treatment Unit Subsystems** | | | |
| DEP evaporator separator | DEP-EVAP-00001 | TBD | TBD |
| DEP evaporator reboiler | DEP-RBLR-00001 | TBD | TBD |
| Evaporator primary condenser | DEP-COND-00001 | TBD | TBD |
| Evaporator intercondenser | DEP-COND-00002 | TBD | TBD |
| Evaporator after condenser | DEP-COND-00003 | TBD | TBD |
| Process condensate lga storage transfer line filter | DEP-FILT-00002 | TBD | TBD |
| Evaporator Feed prefilter | DEP-FILT-00003 | TBD | TBD |

**Table 6A-6 Example Miscellaneous Treatment Unit Schedule**

| Component Name | Plant Item Number | Inspection | Frequency |
|---|---|---|---|
| Condensate duplex cartridge filter | DEP-FILT-00004A<br>DEP-FILT-00004B | TBD | TBD |
| Feed vessel area sump pump filter | DEP-FILT-00005 | TBD | TBD |
| Concentrate effluent cooler | DEP-HX-00001 | TBD | TBD |
| Process Ventilation primary HEPA | DVP-HEPA-00003A<br>DVP-HEPA-00003B | TBD | TBD |
| Process Ventilation secondary HEPA | DVP-HEPA-00004A<br>DVP-HEPA-00004B | TBD | TBD |
| Process Ventilation Heater | DVP-HTR-00001A/B | TBD | TBD |
| Process Ventilation Exhauster | DVP-EXHR-00001A/B | TBD | TBD |

**Table 6A-7 Example Containment Buildings Inspection Schedule**

| Component Name | Inspection | Frequency |
|---|---|---|
| Containment building areas as designated in Chapter 4.0 | Inspect and record in the operating record data gathered from monitoring equipment and leak detection equipment as well as the containment building and the area immediately surrounding the containment building to detect signs of releases of dangerous waste. All areas should be inspected for significant cracks, gaps, corrosion, or other signs of deterioration; look for liquids on floor.<br>Check differential pressure monitoring records to ensure negative pressure in containment building area. | At least every seven days |

# WASTE TREATMENT AND IMMOBILIZATION PLANT
# CHAPTER 7.0
# CONTINGENCY PLAN

## CHANGE CONTROL LOG

Change Control Logs ensure that changes to this unit are performed in a methodical, controlled, coordinated, and transparent manner. Each unit addendum will have its own change control log with a modification history table. The "**Modification Number**" represents Ecology's method for tracking the different versions of the permit. This log will serve as an up to date record of modifications and version history of the unit.

Modification History Table

| Modification Date | Modification Number |
|---|---|
| 09/05/2017 | 8C.2017.6F |
| 08/2011 | |
| | |

This page intentionally left blank.

# CHAPTER 7.0
# CONTINGENCY PLAN

This page intentionally left blank.

# CHAPTER 7.0
# CONTINGENCY PLAN

## TABLE OF CONTENTS

7.0 Contingency Plan ..... 5
7.1 General Facility Information ..... 5
7.1.1 Facility Name ..... 5
7.1.2 Facility Location ..... 5
7.1.3 Owner ..... 6
7.2 Emergency Response Organization ..... 6
7.2.1 Building Emergency Director/Emergency Coordinator ..... 6
7.3 Circumstances Prompting Implementation ..... 6
7.3.1 Facility Hazards ..... 7
7.3.2 Response to Facility Operations Emergencies ..... 10
7.3.3 Natural Phenomena ..... 13
7.4 Emergency Response Procedures ..... 13
7.4.1 Incident Response, Hazard Assessment, and Identification ..... 13
7.4.2 Notification ..... 14
7.4.3 Containment and Control of Emergencies ..... 14
7.4.4 Protective Actions ..... 14
7.4.5 Identification of Dangerous Materials ..... 15
7.4.6 Prevention of Recurrence or Spread of Fires, Explosions, or Releases ..... 17
7.4.7 Post-Emergency Actions ..... 17
7.5 Emergency Equipment ..... 18
7.5.1 Communications Equipment/Warning Systems ..... 18
7.5.2 Portable Emergency Equipment ..... 19
7.5.3 Communications Equipment ..... 19
7.5.4 Personal Protective Equipment ..... 19
7.5.5 Spill Control and Containment Supplies ..... 20
7.5.6 Incident Command Post ..... 20
7.6 Coordination Agreements ..... 21
7.7 Evacuation Plan ..... 21
7.8 Required Reports, Recordkeeping, and Certifications ..... 21
7.8.1 General Requirements ..... 21

7.8.2 Requirements For Tank Systems ..... 21
7.9 Plan Locations and Amendment to Contingency Plan ..... 21
7.10 References ..... 21
Appendix 7-1 Hanford Site Evacuation Routes ..... 22
Appendix 7-2 WTP Site Evacuation Routes ..... 24

## TABLES

Table 7.5-1 Fixed Emergency Equipment ..... 18
Table 7.5-2 Portable Emergency Equipment ..... 19
Table 7.5-3 Communications Equipment ..... 19
Table 7.5-4 Personal Protective Equipment ..... 19
Table 7.5-5 Spill Kits and Spill Control Equipment ..... 20
Table 7-1 Hanford Facility Documents Containing Contingency Plan Requirements of WAC 173-303-350(3) ..... 27

## FIGURES

Figure App-7-1 Hanford Site Evacuation Routes ..... 23
Figure App-7-2 WTP Site Evacuation Routes ..... 25

# 7.0 CONTINGENCY PLAN

The contingency plan requirements provided in Washington Administrative Code (WAC) 173-303-350, *Contingency Plan and Emergency Procedures*, are satisfied in portions of this Contingency Plan and the following document:

- *Hanford Emergency Management Plan* (DOE/RL-94-02 2014) *(Attachment 4 of the Dangerous Waste Portion of the Resource Conservation and Recovery Act (RCRA) Permit for the Treatment, Storage, and Disposal of Dangerous Waste)*

The Contingency Plan also serves to satisfy a broad range of other requirements (e.g., *Occupational Safety and Health Administration Standards* [29 CFR 1910], *Toxic Substance Control Act of 1976* [40 CFR 761], and United States Department of Energy Orders). Therefore, revisions made to portions of this Contingency Plan document that are not governed by the requirements of WAC 173-303 will not be considered as a modification subject to WAC 173-303-830 or Hanford Facility Dangerous Waste Permit, Condition I.C.3.

Table 7-1 identifies which portions of the Contingency Plan are written to meet WAC 173-303 contingency plan requirements. In addition to the Contingency Plan portions identified in Table 7-1, Section 7.9 of the Contingency Plan is written to meet WAC 173-303 requirements identifying where copies of the *Hanford Emergency Management Plan* and the Contingency Plan are maintained on the Hanford Facility. Therefore, revisions to Section 7.9 and the portions identified in Table 7-1 are considered a modification subject to WAC 173-303-830 or Hanford Facility Dangerous Waste Permit, Condition I.C.3.

## 7.1 General Facility Information

The Hanford Tank Waste Treatment and Immobilization Plant (WTP) will be a dedicated treatment plant that will treat mixed waste transferred from the US Department of Energy (DOE), Office of River Protection (ORP) Double-Shell Tank System Unit at the Hanford Site. The WTP is located on the Hanford Site, a 560-square-mile (1,450-square kilometer) DOE site in southeastern Washington State. The WTP is located in the east portion of the 200 Area near the center of the Hanford Site.

The Hanford Site Emergency Preparedness Program is based on the incident command system (ICS) that allows a graded approach for response to emergency events. This plan contains a description of WTP facility specific emergency planning and response and is used in conjunction with the *Hanford Emergency Management Plan* (DOE/RL-94-02). Response to events is performed using WTP and Hanford Site level emergency procedures. A revised and updated contingency plan will be submitted at least 18 months before the start of cold commissioning, when all information necessary for emergency planning is available. The plan will be updated to incorporate additional WTP facilities as they are completed and become operational.

### 7.1.1 Facility Name

US Department of Energy Hanford Site
Waste Treatment Plant

### 7.1.2 Facility Location

Benton County, Washington, within the 200 East Area.

Buildings and facilities covered by this plan are as follows:

- Pretreatment Facility (PTF)
- Low-Activity Waste (LAW) Facility
- High-Level Waste Facility (HLW)
- Balance of Facilities (e.g., support buildings)

- Analytical Laboratory (Lab)
- Effluent Management Facility

### 7.1.3 Owner

United States Department of Energy
Office of River Protection
P.O. Box 450
Richland, Washington 99352

**Facility Manager:**

Bechtel National, Inc.
2435 Stevens Center Pl.
Richland, Washington 99354

## 7.2 Emergency Response Organization

The Emergency Response Organization (ERO), as described in this section and in Section 2.2 of DOE/RL-94-02, is available 24 hours each day to respond to events at the plant. The Building Emergency Director (BED) is prepared to carry out his or her duties immediately and whenever an imminent or actual emergency exists, as required by WAC 173-303-360(2)(a), (b), and (c). DOE/RL-94-02, Section 2.2.1, details the responsibilities of the BED. An on-duty BED will be the designated primary BED. A designated alternate BED will also be available on each shift. Other ERO personnel will be on duty with either primary or alternate responsibilities. A BED, Incident Command Post (ICP) Hazards Communicator, ICP Communicator, and a Hazards Assessor (chemical or radiological, or both, depending on the event) will staff the ERO along with various BED support personnel. In addition, the BED will designate a plant operations specialist to support the Hanford Fire Department (HFD) personnel.

### 7.2.1 Building Emergency Director/Emergency Coordinator

Emergency response will be directed by the BED, as the Emergency Coordinator, until the Incident Commander (IC) arrives. The Incident Command System (ICS) staff with supporting on call personnel then fulfill the responsibilities of the Emergency Coordinator as discussed in WAC 173-303-360. During events, facility personnel perform response duties under the direction of the BED. The Incident Command Post (ICP) is managed by either the senior Hanford Fire Department member present on the scene or senior Hanford Patrol member present on the scene (security events only). These individuals are designated as the IC and as such, have the authority to request and obtain any resources necessary for protecting people and the environment. The BED becomes a member of the ICP and functions under the direction of the IC. In this role, the BED continues to manage and direct facility operations.

A listing of BEDs by title, work location, and work telephone numbers will be inserted in the Building Emergency Plan when issued prior to operations. The BED is located at the WTP (current locations are not determined at this time) or available through an “on-call” list 24 hours a day.

Names and home telephone numbers of the BEDs will be available from the Patrol Operations Center (POC) prior to operations, in accordance with Permit Condition II.A.4.

## 7.3 Circumstances Prompting Implementation

This plan will be implemented when the BED has determined that a release, fire, or explosion has occurred at the facility or in adjacent site facilities. Actions determined in DOE/RL-94-02 and the requirements of WAC 173-303 will be implemented.

The BED ensures that trained personnel identify the character, source, amount, and aerial extent of the release, fire, or explosion to the extent possible. Waste identification is made by activities that can include, but are not limited to the following:

- Visual inspection of involved containers
- Sampling activities in the field
- Reference to inventory records
- Consulting with facility personnel

Samples of materials involved in an emergency will be taken by qualified personnel and analyzed as appropriate. The BED will use the following guidelines to determine if an event has met the requirements of WAC 173-303-360(2)(d):

1 The event involved an unplanned spill, release, fire, or explosion,

AND

2 a The unplanned spill or release involved a dangerous waste, or the material involved became a dangerous waste as a result of the event (e.g., product that is not recoverable), or

2 b The unplanned fire or explosion occurred at the WTP or transportation activity subject to the *Resource Conservation and Recovery Act of 1976* (RCRA) contingency planning requirements,

AND

3 Time-urgent response from an emergency services organization was required to mitigate the event, or a threat to human health or the environment exists.

As soon as possible, after stabilizing event conditions, the BED will determine in consultation with the Environmental Organization if notification to the Washington State Department of Ecology (Ecology) is needed to meet WAC 173-303-360(2)(d) reporting requirements. Additional information is found in Permit Attachment 4 and DOE/RL-94-02, Section 4.2.

If review of all available information does not yield a definitive assessment of the danger posed by the incident, a worst-case condition will be presumed and appropriate protective actions and notifications will be initiated. The BED will be responsible for initiating any protective actions based on their best judgment of the incident.

The BED will assess each incident to determine the response necessary to protect personnel, facility, and the environment. If assistance from Hanford Patrol, HFD, or ambulance units is required, the Hanford Emergency Response Number (911 from site office phones or 373-0911 from cellular phones) will be used to contact the Patrol Operations Center and request the desired assistance.

### 7.3.1 Facility Hazards

Chemical and radiological hazards will be present in the WTP operating facilities. In addition, while construction is ongoing, dangerous wastes will be generated that are typical of construction, consisting mostly of ignitable materials (e.g., spent solvents, waste fuels), corrosives (acids and bases), and toxic materials, which are packaged in various-sized US Department of Transportation containers for shipment to permitted, offsite treatment and disposal facilities. The WTP Project has established accumulation areas for these construction-type wastes. Prior to facilities becoming operational, this plan will be updated to reflect additional hazards information.

#### 7.3.1.1 Hazardous Materials

The WTP maintains and manages a chemical database on a real time basis and can be queried to provide a list of all chemicals on site meeting the criteria for further evaluation. Chemicals used at the WTP Construction Site are evaluated in accordance with procedures that will be developed prior to the receipt of waste. During the chemical evaluation, if the product has a 3 or 4 on a the health hazard

rating (National Fire Protection Agency or Hazardous Materials Identification System [NFPA or HMIS]) or contains a chemical that is listed on the Superfund Amendments and Reauthorization Act (SARA) Extremely Hazardous Substance (EHS) list 302, it is sent to the Emergency Management Administrator for evaluation.

A list of chemicals meeting the listed criteria above can be generated using the WTP SDS database at any time to provide the most up to date list. In addition, 24590-WTP-RPT-CON-03-001, Rev 6, Emergency Planning Hazards Survey provides a brief summary of chemicals that will be evaluated for future WTP Operations.

Chemicals that meet the following criteria are excluded from further consideration if they meet one or more of the criteria:

Public Use - Commonly available to and used by the general public (if the formulation and is the same as for products that are distributed without significant restrictions to the public.)

Dispersible - Materials that do not present an airborne exposure hazard due to its physical form or other factors. Materials may be eliminated if they meet one of the following tests:

- The substance is a solid at normal temperatures and does not contain or include a significant fraction of small particles readily dispersible (less than I0 microns in diameter).
- No plausible release mechanism/process by which a large fraction of a solid material can be reduced to small particles for dispersion and inhalation (less than I0 microns in diameter).
- The substance is a liquid and exhibits a vapor pressure (or partial pressure of a hazardous material in solution) of less than 11 mmHg at about 25 degrees Celsius.

Human Health Hazard - Materials that have been assigned a NFPA health hazard category rating (or a health hazard rating assigned locally using the criteria published in NFPA 704) of 0, 1, or 2.

Quantity - Individual container quantities smaller than those "easily and safely manipulated by one person (i.e., "laboratory scale" quantities). As used here, containers with capacities of no more than 5 gallons (19 L) for liquids, 40 pounds (18 kg) for solids or 10 pounds (4.5 kg) for compressed gases meet such a definition. Note that this threshold is used as a final screening criterion for material that could not be screened out using any of the other criteria above.

Currently the WTP chemical screening process identified no hazardous chemicals having an NFPA or HMIS hazard rating of 3 or 4 that require an Emergency Planning Hazard Assessment (EPHA) to be completed. Future chemical use for operational activities and processes will be evaluated when established.

#### 7.3.1.2 Industrial Hazards

Industrial hazards associated with the WTP Site include electrical equipment, pressurized equipment and systems, high temperature equipment, rotating equipment, confined spaces, forklifts, cranes, lifting operations, and compressed gas cylinders.

Safe design of the plant, job safety analysis, job control system work packages, and safety data sheets (SDSs) provide the basis for the safe use of this equipment in the workplace. Personnel will be trained in the safe use and handling of compressed gas cylinders, cranes, forklifts etc., as applicable.

#### 7.3.1.3 Radioactive, Dangerous, and Mixed Waste

Safe design of the plant, job safety analysis, job control system work packages, and SDSs provide the basis for safe handling of radioactive, dangerous, and mixed waste.

Dangerous waste categories managed at the WTP will be identical to the double-shell tank farms when tank waste treatment commences. Categories include characteristic, listed, and state-only wastes, two of

which are designated as extremely hazardous waste (WT01 and WP01). The following summarizes the dangerous waste numbers:

| Characteristic Waste Numbers | | | |
|---|---|---|---|
| D001 | D002 | D003 | D004 |
| D005 | D006 | D007 | D008 |
| D009 | D010 | D011 | D018 |
| D019 | D022 | D028 | D029 |
| D030 | D033 | D034 | D035 |
| D036 | D038 | D039 | D040 |
| D041 | D043 | | |
| **Listed Waste Numbers** | | | |
| F001 | F002 | F003 | F004 |
| F005 | F039[a] | | |
| **State-only Wastes[b]** | | | |
| WT01 | WT02 | WP01 | WP02 |

[a] Multi-source leachate (F039) is included as a waste derived from non-specific wastes F001 through F005.
[b] Washington State criteria

The WTP will use the following types of permitted dangerous waste management units:

- Storage in containers
- Treatment and storage in tanks
- Treatment in miscellaneous units (e.g., the melters)
- Containment buildings
- Miscellaneous Units

### Solid Form

Radioactive, dangerous, and mixed wastes may be generated at the WTP during process and maintenance activities. Any waste generated will be properly managed in a designated accumulation area(s) and transported to a permitted storage area. Temporary Satellite Accumulation Areas (SAAs) and/or 90-day pads may also be used during an event if necessary and will be regulated in accordance with WAC 173-303-200(2).

### Liquid Form

Highly radioactive mixed waste solutions may be present at the WTP operating facilities. Although these solutions and slurries contain chemicals that are hazardous, the bounding consequence for spills or releases of this waste is usually based on the radiological components of the waste.

### Gaseous Form

The WTP airborne effluent streams are produced through the following:

- Radiological control area heating ventilation air conditioning (HVAC) system – exhaust from radiological controlled areas.
- Vessel off-gas systems – vapors and gases from these systems.

The off-gas systems remove particulate, condensate NOx, and organic vapors from the air stream before discharging them to the radiological controlled area HVAC system. The combined air stream passes through high efficiency particulate air filtration and is monitored for radioactivity and chemicals.

### 7.3.2 Response to Facility Operations Emergencies

Depending on the severity of the event, the BED reviews the site-wide procedures and the WTP emergency response procedure(s) and, as required, categorizes and/or classifies the event. If necessary, the BED initiates area protective actions and Hanford Site ERO activation. The steps identified in the following description of actions do not have to be performed in sequence because of the unanticipated sequence of incident events.

#### 7.3.2.1 Facility Operations Emergencies

##### 7.3.2.1.1 Loss of Utilities

A case-by-case evaluation is required for each event to determine loss of utility impacts. When a BED determines a loss of utility impact, actions are taken to ensure dangerous and/or mixed waste is being properly managed to the extent possible given event circumstances. As necessary, the BED will stop operations and take appropriate actions until the utility is restored.

###### 7.3.2.1.1.1 Loss of Electrical Power

Should there be a partial or total loss of electrical power to the WTP; automatic measures ensure the plant is in a safe operational configuration. (Safe operational configuration is defined as a shutdown to minimal operations that will prevent releases and prevent unnecessary damage to the equipment.)

The emergency power system will consist of two diesel turbine- automatically controlled emergency diesel generators and one diesel engine standby generator. The automatic and standby generators are connected to three separate 4.16kV emergency switchgears. Upon loss of power the emergency diesel turbine generators will automatically start. The emergency diesel turbine generators are capable of starting, accelerating, and being loaded with the design load in a specified time limit. The standby diesel generator is started manually or automatically in the event of a prolonged loss of offsite power. The emergency power system will be connected to essential loads in order to ensure only a short-term power interruption for those loads designated as essential. Critical indications and controls are backed up by uninterruptible power supplies and batteries. The plant will remain in a safe condition during loss of electrical power.

Egress lighting will consist of self-contained fixtures with battery packs and charging systems. These lighting systems will be located in stairways, exit routes, and fire alarm stations and will come on automatically upon loss of normal power to the fixture. A selected part of the normal lighting will operate as essential lighting, and will provide a minimum level of illumination throughout the plant to aid in restoring the plant to normal operation. Essential lighting will be powered by the emergency power system and will be available after an offsite power loss, following a delay required to start the emergency power supply diesel generators and for the generators to pick up the essential loads.

Selected instrumentation and controls will also be powered by an un-interruptible power supply (UPS) system and therefore will be unaffected by a loss of offsite power. UPS systems will be battery backed, and the battery chargers will be connected to the emergency power system. Radiation monitors, such as Continuous Air Monitors (CAMs) and area 1 radiation monitors, are also powered by the UPS systems and continue operating during power failure.

###### 7.3.2.1.1.2 Loss of Water

Upon loss of the raw water system, operations will be restricted. Upon loss of potable water chemical operations will be terminated until safety showers and eyewash stations are available. Upon loss of the

fire suppression system, the plant will be placed in a safe configuration, and corrective actions will be implemented.

#### 7.3.2.1.1.3 Loss of Ventilation

A cascade ventilation system is used at the WTP in conjunction with physical building containment features to confine transferable radioactive contamination in the event of an accidental release, spill, or system failure. The ventilation system is designed to maintain building differential pressures so air will flow from areas of lesser contamination potential to areas of greater contamination potential through containment boundary penetrations such as engineered air gaps and air in-bleed ductwork.

The WTP is divided into numbered zones with the higher number indicating the greater hazard potential and therefore the greater degree of control/restriction required. Radiation (R1 to R5) and contamination (C1 to C5) zones are classified independently in order to differentiate between the need for shielding or confinement.

Supply air in C2 areas flows via C3 to the C5 areas, where it will be discharged by the C5 exhaust fans. In some instances, the airflow will flow from the C2 areas to the C3 areas, where it will be discharged by the C3 exhaust fans. Some C2 air flow will be directly exhausted. Upon loss of the ventilation system, restoration of the C3 and C5 exhaust fans will be immediately attempted. If the C3 and C5 exhaust fans cannot be restored immediately, the C2 supply fans are automatically stopped, and personnel may be notified to evacuate C3 areas, as a precautionary measure.

The BED and either the ERO or the IC will take the following actions:

- Locate the source of the problem, and take steps necessary to control the event
- Ensure appropriate areas have been evacuated
- Monitor contamination levels in the plant
- Restore ventilation system

#### 7.3.2.1.1.4 Loss of Process or Instrument Air

The process air system will use redundant air compressors. One will be in operation and the other(s) will be in autostart mode. If the standby compressor fails to start on loss of the operating compressor, a backup compressor will be started locally.

### 7.3.2.1.2 Major Process Disruption/Loss of Plant Control

A major process disruption or loss of plant control could be caused by a failure of the process control system. A system condition that causes loss of the process control system could cause plant abnormalities that would lead to increased radiological challenges to WTP protection systems.

Non-essential personnel will exit the area of WTP where the system condition has occurred. The system condition will be assessed, and corrective actions will be implemented. Operations will be placed on recirculation by securing the waste feed to the plant. Facility shutdown will be accomplished by performing manual, localized actions such as system isolation, equipment shutdown, etc.

### 7.3.2.1.3 Pressure Release

The WTP has high-pressure steam and low-pressure compressed air and steam systems. Loss of the compressed air or steam system or systems could result in loss of plant control or a process disruption. Process disruption or loss of plant control could interrupt operations. However, it is not likely that this event would be classified as an emergency.

Pressurized gases are used throughout the WTP. In addition, compressed gas cylinders will be stored in the compressed gas storage area. The inventory of gases includes flammable and nonflammable gases.

These gases pose a hazard in the immediate storage area, or in the immediate area of the location being used. Failure of compressed gas bottles could cause flying debris hazards.

A process system pressure release is categorized as a condensate spray release.

#### 7.3.2.1.4 Fire and (or) Explosion

In the event of a fire, the discoverer activates a fire alarm; calls 911 from site office phones/373-0911 from cellular phones or verifies that 911 has been called. Automatic initiation of a fire alarm (by the smoke detectors, sprinkler systems, or pull boxes) is also possible.

- Unless otherwise instructed, personnel shall evacuate the area/building by the nearest safe exit and proceed to the designated staging area for accountability.
- On actuation of the fire alarm, ONLY if time permits, personnel should shut down equipment, secure waste, and lock up classified materials (or hand carry them out). The alarm automatically signals the Hanford Fire Department.
- The BED proceeds directly to the ICP, obtains all necessary information pertaining to the incident, and sends a representative to meet Hanford Fire Department.
- The BED provides a formal turnover to the IC when the IC arrives at the ICP.
- The BED informs the Hanford Site ERO as to the extent of the emergency (including estimates of dangerous waste, mixed waste, or radioactive material quantities released to the environment).
- If operations are stopped in response to the fire, the BED ensures that systems are monitored for leaks, pressure buildup, gas generation, and ruptures.
- Hanford Fire Department firefighters extinguish the fire as necessary.

The following is representative of the type of information that the BED may be called upon to provide to the incident command structure or other response agencies:

- Location and health of personnel, including missing personnel and possible locations for fire fighters to search for them
- Location and severity of fire, including character, exact source, and the amount, area, and extent of any released materials
- Known hazardous conditions (such as, radiological, non-radiological, electrical, thermal, flammable materials, pressurized cylinders, toxic gas, pressure systems, batteries, radiation areas)
- Plant operating status
- Utility systems status
- Support for WTP radiological control personnel (that is, monitoring, surveys, sampling, decontamination)
- WTP layout
- Support for firefighter activities as required
- Notifications as required in accordance with plant procedures and Hanford Emergency
- Management Plan (DOE/RL-94-02),

NOTE: Following a fire and/or explosion, WAC 173-303-640(7) will be addressed for the WTP regarding fitness for use.

#### 7.3.2.1.5 Hazardous Material, Dangerous and/or Mixed Waste Spill

Dangerous waste or mixed waste could spill due to equipment failure or operator error. The severity of the event would depend on the nature and quantity of the spill. In addition, the presence of process

chemicals could result in a spill of hazardous materials, due to equipment failure or operator error. See section 7.4 of this document for details on responding to incidents.

#### 7.3.2.1.6 Transportation and (or) Packaging Incidents

A transportation or packaging event involving hazardous chemicals or radioactive material could result in personnel exposure to hazardous materials. Potential environmental damage could occur due to the release of hazardous or radioactive materials.

### 7.3.3 Natural Phenomena

The WTP operating facilities are being designed such that it will not fail under a design basis event. Therefore, natural phenomena events are not expected to cause structural damage to these facilities, which would constitute an emergency, or cause a release to the environment. However, the following natural phenomena that have the potential to cause conditions that are beyond the facility design basis are discussed: a beyond design basis seismic event, high winds, volcanic eruption and ash fall, a flood, a range fire, and an aircraft crash.

#### 7.3.3.1 Seismic Event

Depending on the magnitude of the beyond design basis event, severe structural damage can occur, resulting in serious injuries or fatalities and the release of hazardous materials to the environment. Damaged electrical circuits and wiring could result in the initiation of fires.

#### 7.3.3.2 Volcanic Eruption or Ash Fall

Though not expected to cause structural damage, the ash resulting from a volcanic eruption could cause shorts in electrical equipment and plug ventilation system filters.

#### 7.3.3.3 High Winds or Tornadoes

High winds defined as sustained winds above a threshold that would potentially or actually cause significant structural damage to the facility are not expected to occur. (Significant structural damage is interpreted to mean a breach of facility containment and confinement systems sufficient to cause an actual or potential release of hazardous material to the environment). However, dirt and dust from windstorms could cause shorts in electrical equipment, or could plug ventilation system filters. Disruption of normal operations is possible.

#### 7.3.3.4 Flood

The 200 Area is well above projected flood elevations for the Columbia and Yakima Rivers; therefore, a flood is not considered a credible natural event for the WTP. The grading and drainage features that are provided ensures that precipitation, even from a downpour, would infiltrate the ground or drain off toward the Columbia River without significant flooding. The WTP is not sited in a wetlands or coastal high-hazard area.

#### 7.3.3.5 Range Fire

The hazards associated with a range fire are similar to those associated with a building fire plus potential site access restrictions and travel hazards such as poor visibility. Smoke and ash from a range fire can also cause shorts in electrical equipment, or plug ventilation system filters. Disruption of normal operations is possible.

## 7.4 Emergency Response Procedures

### 7.4.1 Incident Response, Hazard Assessment, and Identification

The initial response to any emergency is to immediately protect the health and safety of people in the affected area. Identification of released material is essential to determine appropriate protective actions. Containment, treatment, and disposal assessment are secondary responses.

The following sections describe the process for implementing basic protective actions as well as descriptions of response actions for the events listed in Section 7.3 of this plan. DOE/RL-94-02, Section 1.3, provides concept of operations for emergency response on the Hanford Site. Site-specific procedures are detailed in *RL Emergency Plan Implementing Procedures* (DOE-0223) and DOE/RL-94-02, Section 1.3.3.2. will be used as necessary for hazard assessment and identification of hazards. Facility specific actions will be denoted in WTP Building Emergency Plan (BEP).

### 7.4.2 Notification

As soon as possible after stabilizing event conditions, the BED will determine in consultation with the Environmental Organization if notification to Ecology is needed to meet WAC 173-303-360(2)(d) reporting requirements. Additional information regarding requirements for appropriate notifications is found in Permit Attachment 4, DOE/RL-94-02, Section 4.2.

### 7.4.3 Containment and Control of Emergencies

Site-specific procedures are detailed in Department of Energy, Richland Operations Office (DOE/RL) Emergency Plan Implementing Procedures (DOE-0223) and will be used as necessary for the containment and control of emergencies. Facility specific actions will be denoted in WTP Building Emergency Plan (BEP).

### 7.4.4 Protective Actions

Depending on the severity of the event, the BED reviews the site-wide and WTP emergency response procedure(s) and, as required, categorizes and (or) classifies the event. If necessary, the BED initiates area protective actions and Hanford Site ERO activation. The steps identified in the following description of actions do not have to be performed in sequence because of the unanticipated sequence of incident events.

The following emergency signals will be used to initiate emergency response:

- Evacuation - steady siren
- Take cover - wavering siren
- Fire - gong/bell

Protective action responses are discussed in the following sections. The steps identified in the description of actions do not have to be performed in sequence because of the unanticipated sequence of incident events.

#### 7.4.4.1 Evacuation

The objective of a facility evacuation order is to limit personnel exposure to hazardous materials or dangerous/mixed waste by increasing the distance between personnel and the hazard. The scope of the evacuation includes evacuation of the facility due to an event at the facility as well as evacuation of the facility in response to a site evacuation order. Evacuation is directed by the BED when conditions warrant and applies to all personnel not actively involved in the event response or in emergency plan related activities.

The BED initiates the evacuation by directing an announcement be made to evacuate along with the evacuation location over the public address system and facility radios. Personnel proceed to a predetermined staging area (see Figure App-7-2 WTP Site Evacuation Routes), or other safe upwind location, as determined by the BED. The BED determines the operating configuration of the facility and identifies any additional protective actions to limit personnel exposure to the hazard.

Emergency organization personnel or assigned operations personnel conduct a sweep of occupied buildings to ensure that all personnel and visitors have evacuated. For an immediate evacuation, accountability is performed at the staging area. The BED assigns Personnel Accountability Aides (PAAs)

and Staging Area Managers (SAMs) with the responsibility to ensure that evacuation actions are taken at WTP. When evacuation actions are complete, the aides/managers provide a status report to the BED. The BED provides status to the IC.

#### 7.4.4.2 Take Cover

The objective of the take cover order is to limit personnel exposure to hazardous or dangerous/mixed waste when evacuation is inappropriate or not practical. Evacuation might not be practical or appropriate because of extreme weather conditions or the material release might limit the ability to evacuate personnel safely.

The BED initiates the take cover by directing an announcement be made over the public address system and facility radios, and, as conditions warrant, by activating the 200 Area take cover alarms by calling the POC using 373-3800. Protective actions associated with operations include configuring, or shutting down, the ventilation systems. Determination of additional take cover actions is based on operating configuration, weather conditions, amount and duration of release, and other conditions, as applicable to the event and associated hazard. As a minimum, personnel exposure to the hazard is minimized. The BED assigns personnel as accountability aides with responsibility to ensure that take cover actions are taken at all occupied buildings (take cover locations at WTP). When take cover actions are complete, the PAAs provide the BED with a status report.

### 7.4.5 Identification of Dangerous Materials

The WTP has engineering controls to contain and/or minimize spills. These controls include containment berms, dedicated spill control sumps, remote leak detection systems, remote gauges, and level indicators. The WTP operating procedures will provide alarm response and maintenance actions for leak detection equipment, surveillance of possible leak locations, and response actions for detected spills.

Spills can result from many sources including process leaks, container spills or leaks, damaged packages or shipments, or personnel error. Spills of mixed waste are complicated by the need to deal with the extra hazards posed by the presence of radioactive materials.

The following actions will be taken in response to a spill or release of hazardous material, dangerous and (or) mixed waste:

The person discovering a spill will immediately:

<u>S</u>tops work

<u>W</u>arns others in the vicinity

<u>I</u>solates the area, so others do not wander into the hazard

<u>M</u>inimizes exposure by moving upwind (if outside) or to another area (if indoors)

- The discoverer notifies the BED and provides details, including size of spill, location, quality, and item spilled.
- The BED determines if emergency conditions exist requiring response from the HFD based on classification of the spill, injured personnel, and evaluates need to perform additional protective actions.
- If HFD resources are not needed, the spill is mitigated with resources identified and proper notifications are made.
- If the HFD resources are needed, the BED calls 373-0911 and requests emergency services.
- The BED sends a representative to meet the HFD.
- The BED provides a formal turnover to the IC when the IC arrives.
- The BED informs the Hanford Site ERO as to the extent of the emergency (including estimates of dangerous waste, mixed waste, or radioactive material quantities released to the environment).

- If operations are stopped in response to the spill, the BED ensures that systems are monitored for leaks, pressure buildup, gas generation, and ruptures.
- The HFD stabilizes the spill.

As necessary, the BED will also initiate or arrange for the following and ensure all personnel involved follow the guidance from Hanford Emergency Management Plan (DOE/RL-94-02 1999):

- Notify plant personnel of the spill or release by making an announcement over the public address system and facility radios.
- Establish a control point at a safe location, and coordinate further spill mitigation activities.
- Notify the contractor Environmental Point of Contact for support.
- Obtain all available information pertaining to the event, evaluate the need for event categorization or classification, and begin ERO activation as necessary.
- Initiate use of plant and emergency response procedures.
- Arrange for care of any injured persons.
- Maintain access control at the event site by keeping unauthorized personnel and vehicles away from the area. Security personnel can be used to assist in site control. In determining which areas are to be controlled, the BED will consider environmental factors such as wind velocity and direction.
- Arrange for proper remediation of the event after evaluation, and if required, incident investigation processes have been initiated.
- Remain available for fire, patrol, and other authorities on the scene, and provide all required information.
- Enlist the assistance of alternate BED(s) or ERO personnel, if response activities are projected to be long term.
- Ensure the use of proper protective equipment, remedial techniques, transfer procedures, and decontamination procedures by all involved personnel, if remediation is performed by plant personnel.
- Remain at the scene to oversee activities and provide information, if remediation is performed by the HFD Hazardous Materials (HAZMAT) Team or other response teams.
- Ensure proper containerization, packaging, and labeling of recovered spill materials.
- Ensure decontamination (or restocking) and restoration of emergency equipment used in the spill remediation before resuming operations.
- Provide required reports after the event in accordance with WTP procedures

Additional actions to be taken in response to a leaking tank include the following:

- Removal of the leaking tank from service.
- Conduct an investigation to determine the cause of the event.
- Perform repairs or replacements before the tank is returned to service—with, as required—final approval from an independent certified professional engineer.
- Following an emergency event involving a tank system, address all requirements of WAC 173-303-640(7) regarding fitness for use.

If a catastrophic dumping of mixed waste occurs, affected plants or processes will be immediately shut down. The actions described in Section 7.3 will be performed. If a catastrophic dumping causes a high radiation alarm on the C5 or C3 ventilation systems, the standby systems will be started, and actions described in Section 7.3.2.1.1.3 will be performed.

#### 7.4.5.1 Damaged or Unacceptable Shipments

No waste will be received at the WTP from outside of the Hanford Site. Therefore, this section of the plan is not applicable.

### 7.4.6 Prevention of Recurrence or Spread of Fires, Explosions, or Releases

The BED, as part of the Incident Command System, takes the steps necessary to ensure that a secondary release, fire, or explosion does not occur. The BED will take measures, where applicable, to stop processes and operations, collect and contain released wastes and remove or isolate containers. The BED ensures monitoring for leaks, pressure buildups, gas generation, or ruptures in valves, pipes or other equipment, whenever this is appropriate.

Following a fire and (or) explosion, WAC 173-303-640(7) will be addressed for any tank systems that may have been affected regarding fitness for use.

### 7.4.7 Post-Emergency Actions

DOE/RL-94-02, Section 9, describes actions for event termination, incident recovery, and restart of operations. The extent by which these actions are employed is based on the incident classification of each event. In addition, DOE/RL-94-02 also contains actions for management of incompatible wastes that might apply.

Equipment used during an incident is decontaminated (if practicable) or disposed of as spill debris. Decontaminated equipment is checked for proper operation before storage for subsequent use. Consumable and disposed materials are restocked. Fire extinguishers are replaced.

The BED ensures that equipment used during the incident is cleaned and fit for its intended use before operations are resumed. Depleted stocks of neutralizing and absorbing materials are replenished.

#### 7.4.7.1 Termination of Event

Hanford Emergency Management Plan (DOE/RL-94-02), Section 9.0, describes actions for event termination, incident recovery, and restart of operations. The extent by which these actions are employed is based on the incident classification of each event. In addition, Hanford Emergency Management Plan (DOE/RL-94-02) also contains actions for the management of incompatible wastes that might apply.

For events where the RL-Emergency Operations Center (EOC) is activated, the RL and DOE Office of River Protection Emergency Manager has the authority to declare event termination. This decision is based on input from the BED, IC, and other emergency response organization members. For events where the RL-EOC is not activated, the ICS and staff will declare event termination.

#### 7.4.7.2 Incident Recovery and Restart of Operations

A recovery plan is developed when necessary in accordance with DOE/RL-94-02, Section 9.2. A recovery plan is needed following an event where further risk could be introduced to personnel, the facility, or the environment through recovery action and (or) to maximize the preservation of evidence.

If the emergency response is implemented in accordance with Section 4 of this plan, Ecology will be notified before operations can resume. This notification is in addition to the required reports discussed in Section 5.1 of DOE/RL-94-02 and will include the following statements:

- There are no incompatibility issues with the waste and released materials from the incident
- All the equipment has been cleaned, fit for its intended use, and placed back into service

The notification required by WAC 173-303-360(2)(j) may be made via telephone conference and documentation of the notification will be included in the WTP operating record. Additional information that Ecology requests regarding these restart conditions will be included in the required 15-day report identified in Section 7.8 of this plan and required by WAC 173-303-360(2)(k).

For emergencies not involving activation of the RL-EOC, the BED ensures that conditions are restored to normal before operations are resumed. If the Hanford Site ERO was activated and the emergency phase is complete, a special recovery organization could be appointed at the discretion of RL to restore conditions to normal. This process is detailed in RL and contractor emergency procedures. The makeup of this organization depends on the extent of the damage and the effects. The onsite recovery organization will be appointed by the appropriate contractor's management.

After an event, the BED or the onsite recovery organization ensures that no waste that might be incompatible with the released material is treated, stored, and (or) disposed of until cleanup is completed pursuant to WAC 173-303-360(2)(j). Cleanup actions are taken by WTP personnel or other assigned personnel. DOE/RL-94-02, Section 9.2.3, describes actions to be taken.

Waste from cleanup activities is designated and managed as newly generated waste. A field check for compatibility is performed before storage, as necessary. Incompatible wastes are not placed in the same container. Waste containers are placed in approved storage areas appropriate for their compatibility class.

If incompatibility of waste was a factor in the incident, the BED or the onsite recovery organization ensures that the cause is corrected.

## 7.5 Emergency Equipment

Hanford Site emergency resources and equipment are described and listed in DOE/RL-94-02, Section 11.2. Emergency resources and equipment for the entire WTP are presented in this section.

### 7.5.1 Communications Equipment/Warning Systems

Table 7.5-1 lists the fixed emergency equipment available at the WTP.

**Table 7.5-1 Fixed Emergency Equipment**

| Type | Location | Capability |
|---|---|---|
| Safety shower/eye wash station | Throughout the WTP in locations designated by facility procedures. | Assist in flushing chemicals and materials from body or eyes and face. |
| Automatic sprinkler system | Throughout the WTP. | Assist in the control of fire. |
| Fire alarm pull boxes | Throughout the WTP. | Activate the building fire alarm and notify fire department, as developed by Coordination Agreements. |
| Emergency diesel generators | East of the LAW Facility. | Provide emergency power. |
| Fire hose connections | Throughout the WTP in locations designated by facility procedures. | Allow for connection of fire hoses to site water system for manual fire suppression. |

### 7.5.2 Portable Emergency Equipment

Table 7.5-2 lists the portable emergency equipment available at the WTP.

**Table 7.5-2 Portable Emergency Equipment**

| Type | Location | Capability |
|---|---|---|
| General purpose fire extinguishers | Throughout the WTP. | Fire suppression for class A, B, and C fires. |
| $CO_2$ or clean-agent fire extinguishers | Throughout the WTP. | Suppress electrical fires. |
| Miscellaneous emergency equipment | Throughout the facility located in emergency equipment cabinets as designated by facility procedures. | Safety harnesses, blankets, first aid kits, stretchers, emergency lights, and emergency tools. |

### 7.5.3 Communications Equipment

Table 7.5-3 lists communications and warning systems at the WTP.

**Table 7.5-3 Communications Equipment**

| Type | Location | Capability |
|---|---|---|
| **Siren System**<br>Evacuation<br>STEADY SIREN<br>Take Cover<br>WAVERING SIREN<br>Fire<br>GONG/BELL | Throughout the WTP. | Alert facility personnel of emergency conditions. |
| Public address system | Throughout the WTP. | Provides for information dissemination to facility personnel. |
| Telephone system | WTP Central Control Room, office areas, and other plant locations. | Internal and external communications. |
| Portable two-way radios | Throughout the WTP. | Communications to the CCR. |

### 7.5.4 Personal Protective Equipment

Table 7.5-4 lists types of protective equipment available at the WTP.

**Table 7.5-4 Personal Protective Equipment**

| Type | Location | Capability |
|---|---|---|
| • Waterproof coveralls Leather protective wear<br>• Respirators<br>• Filtered masks<br>• Oxygen supplies<br>• Escape packs<br>• SCBAs | Throughout the facility in or near emergency equipment cabinets as designated by facility procedure. | Protection from various hazards (e.g., smoke, fumes, oxygen deficient atmosphere, chemicals, high airborne radioactivity concentrations, and radiological contamination) |
| SCBA = self-contained breathing apparatus. | | |



**Table 7-5 Hanford Facility Documents Containing Contingency Plan Requirements of WAC 173-303-350(3)**

### 7.5.5 Spill Control and Containment Supplies

Table 7.5-5 lists the locations of spill kits and includes a basic listing of contents.

**Table 7.5-6 Spill Kits and Spill Control Equipment**

| Type | Location | Capability |
|---|---|---|
| Absorbents and spill response materials<br>55-gal drums<br>Overpack drums<br>Bags<br>Step-off pads<br>Protective clothing<br>Chemical resistant coveralls<br>Surgical and chemical gloves<br>Acid Goggles/Face shields<br>Sodium-bicarbonate<br>Barrier Tape<br>Rags<br>Scissors<br>Flashlight<br>Batteries<br>pH paper<br>Mop handles<br>Mop heads<br>Mop bucket with wringer<br>Hazardous material labels<br>Non-sparking shovel<br>Hazardous absorbent booms<br>Ear plugs<br>Portable barriers | Throughout the facility in or near spill kit cabinets as designated by facility procedures. | Control and mitigation of radioactive and chemical spills. |

### 7.5.6 Incident Command Post

If the ICP is activated, the BED will notify appropriate personnel of its location by either the public address system, radios, or telephones. Emergency resource materials are stored at each location. The IC could activate the Hanford Fire Department Mobile Command Unit if necessary.

The ICP will contain the following:

- Telephone communications, (including speakerphones and headsets) including the Hanford Site Emergency Alerting System (HSEAS)
- Radio communications
- Access to the public address system
- Access to plant operations data

- Access to plant systems information
- Access to accountability and building access control information

## 7.6 Coordination Agreements

RL has established a number of coordination agreements, or memoranda of understanding with various agencies to ensure proper response resource availability for incidents involving the Hanford Site. A description of the agreements is contained in DOE/RL-94-02, Section 3, Table 3-1.

## 7.7 Evacuation Plan

Figure App-7-1 and Figure App-7-2 shows the evacuation routes for the Hanford Site and WTP Facility. Evacuation routing maps for the WTP will be maintained in the facility operating record and provide identification of the primary staging area and a general layout of the facility. Alternate evacuation routes and staging areas will be determined and used on a case-by-case basis, and based on meteorological conditions at the time of an event.

## 7.8 Required Reports, Recordkeeping, and Certifications

Post incident written reports are required for certain incidents on the Hanford Site. The reports are described in DOE/RL-94-02, Section 5.1.

### 7.8.1 General Requirements

Facility management will note in the WTP operating record, the time, date, and details of any incident that requires implementation of the contingency plan (refer to Section 7.3 of this plan). Within fifteen (15) days after the incident, a written report on the incident will be submitted to Ecology. The report will include all items specified in WAC 173-303-360(2)(k).

### 7.8.2 Requirements for Tank Systems

If a release from a tank system occurs that requires notification according to WAC 173-303-640(7), notification as described in WTP procedures will be followed.

## 7.9 Plan Locations and Amendment to Contingency Plan

Copies of this Contingency plan are maintained at the following locations:

- WTP ICP
- WTP Control Room

Portions of the plan will be reviewed and immediately amended if necessary when conditions described in DOE/RL-94-02, Section 14.3.1.1, occur. In addition, the plan will be revised prior to operation of additional WTP facilities. This will include information that is not currently available. Subsequently, the plan will be reviewed annually and updated as needed.

## 7.10 References

DOE/RL-94-02, Hanford Emergency Management Plan, as amended

WAC 173-303, Washington State Dangerous Waste Regulations, Washington Administrative Code, Washington State Department of Ecology, Olympia, Washington, as amended

Ecology, 2011, Dangerous Waste Portion of the Hanford Facility Resource Conservation and Recovery Act Permit for the Treatment, Storage, and Disposal of Dangerous Waste, Permit Number WA7890008967, Washington State Department of Ecology, Olympia, Washington, as amended

DOE-0223, Emergency Plan Implementing Procedures

24590-WTP-RPT-CON-03-001, Rev 6, Emergency Planning Hazards Survey

# APPENDIX 7-1
# HANFORD SITE EVACUATION ROUTES

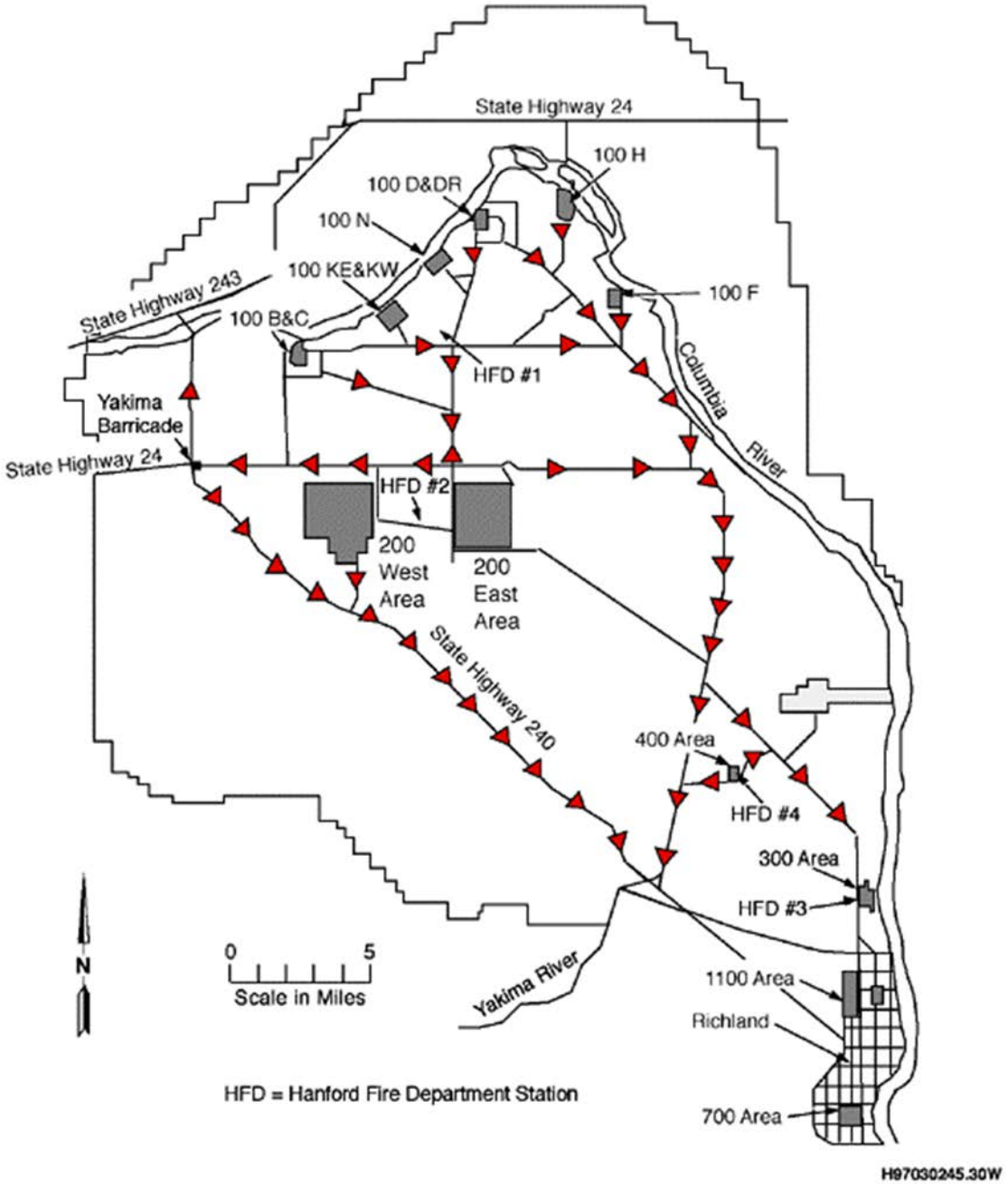


**Figure App-7-1 Hanford Site Evacuation Routes**

# APPENDIX 7-2
# WTP SITE EVACUATION ROUTES

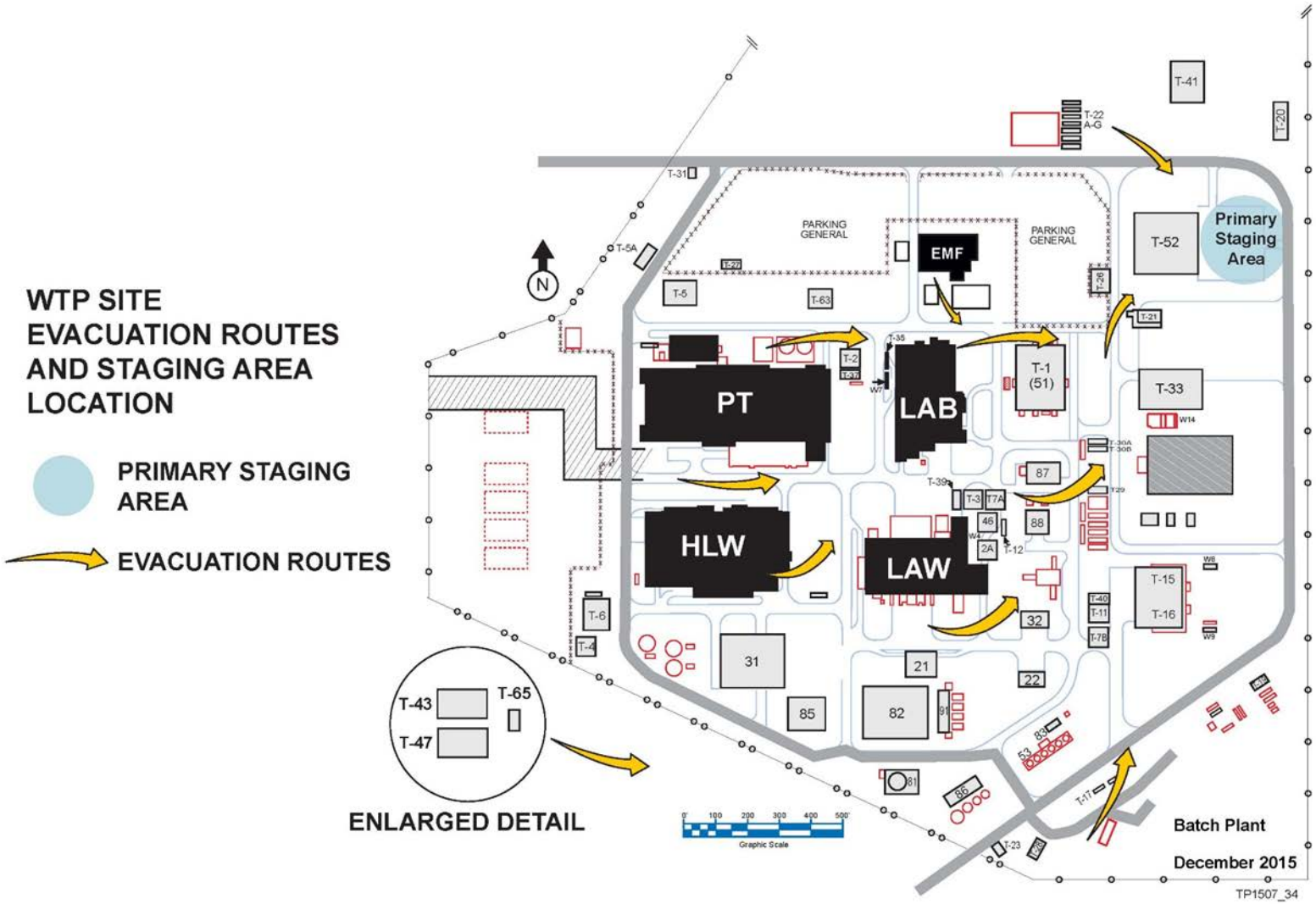


**Figure App-7-2 WTP Site Evacuation Routes**

This page intentionally left blank.

**Table 7-1 Hanford Facility Documents Containing Contingency Plan Requirements of WAC 173-303-350(3)**

| Requirement | *Hanford Emergency Management Plan* (DOE/RL-94-02): Attachment 4 of the Hanford Facility Dangerous Waste Permit | Chapter 7.0 Contingency Plan[1] |
|---|---|---|
| -350(3)(a) – A description of the actions which facility personnel must take to comply with this section and WAC 173-303-360. | X[2]<br>Section 1.3.4 | X[2]<br>Sections 7.3 through 7.3.2 and 7.4.4 and 7.4.6[3]<br>Sections 7.3.2.1.6 |
| -350(3)(b) – A description of the actions which shall be taken in the event that a dangerous waste shipment, which is damaged or otherwise presents a hazard to the public health and the environment, arrives at the facility, and is not acceptable to the owner or operator, but cannot be transported pursuant to the requirements of WAC 173-303-370(5), Manifest system, reasons for not accepting dangerous waste shipments. | X[2]<br>Section 1.3.4 | X[2,4]<br>Section 7.4.5.1 |
| -350(3)(c) – A description of the arrangements agreed to by local police departments, fire departments, hospitals, contractors, and state and local emergency response teams to coordinate emergency services as required in WAC 173-303-340(4). | X<br>Sections 3.2.3, 3.3.1, 3.3.2, 3.4, 3.4.1.1, 3.4.1.2, 3.4.1.3, 3.7, and Table 3-1 | |
| -350(3)(d) – A current list of names, addresses, and phone numbers (office and home) of all persons qualified to act as the emergency coordinator required under WAC 173-303-360(1). Where more than one person is listed, one must be named as primary emergency coordinator, and others must be listed in the order in which they will assume responsibility as alternates. For new facilities only, this list may be provided to the department at the time of facility certification (as required by WAC 173-303-810 (14)(a)(i)), rather than as part of the permit application. | | X[5]<br>Section 7.2.1 |

| Requirement | *Hanford Emergency Management Plan* (DOE/RL-94-02): Attachment 4 of the Hanford Facility Dangerous Waste Permit | Chapter 7.0 Contingency Plan[1] |
|---|---|---|
| -350(3)(e) – A list of all emergency equipment at the facility (such as fire extinguishing systems, spill control equipment, communications and alarm systems, and decontamination equipment), where this equipment is required. This list must be kept up to date. In addition, the plan must include the location and a physical description of each item on the list, and a brief outline of its capabilities. | X<br>Hanford Fire Department: Section 11.2 | X<br>Section 7.5 |
| -350(3)(f) – An evacuation plan for facility personnel where there is a possibility that evacuation could be necessary. This plan must describe the signal(s) to be used to begin evacuation, evacuation routes, and alternate evacuation routes. | X[6]<br>Figure 7-3 and Table 5-1 | X[7]<br>Section 7.4.4 through 7.4.4.2<br>Section 7.7 |

**An "X" indicates requirement applies.**

[1]Portions of the *Hanford Emergency Management Plan* not enforceable through Appendix A of that document are not made enforceable by reference in Chapter 7.0 Contingency Plan.

[2]The *Hanford Emergency Management Plan* contains descriptions of actions relating to the Hanford Site Emergency Preparedness System. No additional description of actions are required at the Hanford Site level. If other credible scenarios exist or if emergency procedures at the WTP are different, the description of actions contained in the Chapter 7.0 Contingency Plan will be used during an event by a building emergency director.

[3]Sections 7.3.2, 7.4.4 and 7.4.6 of Chapter 7.0 Contingency Plan are those sections subject to the Class 2 "Changes in emergency procedures (i.e., spill or release response procedures)" described in WAC 173-303-830, Appendix I, Section B.6.a.

[4]This requirement only applies to Treatment, Storage, or Disposal units that receive shipment of dangerous or mixed waste defined as offsite shipments in accordance with WAC 173-303.

[5]Emergency Coordinator names and home telephone numbers are maintained separately from the contingency plan document, on file in accordance with Hanford Facility Dangerous Waste Permit General Condition II.A.3, and is updated, at a minimum, monthly.

[6]The Hanford Facility (site-wide) signals are provided in this document. No unit/building signal information is required unless unique devices are used at the unit/building.

[7]An evacuation route for the WTP is provided. Evacuation routes for occupied buildings surrounding the WTP are provided through information boards posted within buildings.

# WASTE TREATMENT AND IMMOBILIZATION PLANT
# CHAPTER 8.0
# PERSONNEL TRAINING

## CHANGE CONTROL LOG

Change Control Logs ensure that changes to this unit are performed in a methodical, controlled, coordinated, and transparent manner. Each unit addendum will have its own change control log with a modification history table. The "**Modification Number**" represents Ecology's method for tracking the different versions of the permit. This log will serve as an up to date record of modifications and version history of the unit.

Modification History Table

| Modification Date | Modification Number |
|---|---|
| 09/05/2017 | 8C.2017.6F |
| 06/2011 | |
| | |

This page intentionally left blank.

# CHAPTER 8.0
# PERSONNEL TRAINING

This page intentionally left blank.

# CHAPTER 8.0
# PERSONNEL TRAINING

## TABLE OF CONTENTS

8.0 Introduction ..... 5
8.1 Initial Training ..... 5
8.2 Task Specific Training ..... 6
8.3 Description of Training Plan ..... 6
8.4 Continuing Training ..... 7
8.5 Training Program Administration ..... 8
8.6 Job Title and Job Description ..... 8
8.7 Documentation and Record Retention ..... 8

## TABLES

Table 8-1 Example WTP Training Matrix ..... 9

This page intentionally left blank.

# 8.0 INTRODUCTION

This chapter discusses personnel training requirements based on Washington Administrative Code (WAC) 173-303 and the *Dangerous Waste Portion of the Hanford Facility Resource Conservation and Recovery Act Permit for the Treatment*, Storage, and Disposal of Dangerous Waste (Ecology 1994a), hereafter referred to as "the Permit".

Permit Condition II.C (Personnel Training) contains training requirements applicable to Hanford Site facility personnel and non-facility personnel. Compliance with these requirements at the Hanford Tank Waste Treatment and Immobilization Plant (WTP) is demonstrated by information contained in both *Permit Attachment 5* and this chapter. A training plan for the WTP will be submitted for incorporation into the operating record prior to initial receipt of waste to meet interim compliance schedule item 7.

## 8.1 INITIAL TRAINING

Introductory training includes general Hanford Facility training and WTP-specific training. General Hanford Facility training is described in Permit Attachment 5, and provided in accordance with Permit Condition II.C. WTP-specific training is provided to WTP personnel allowing personnel to work unescorted, and in some cases is required for escorted access. WTP personnel cannot perform a task for which they are not properly trained, except to gain required experience while under the direct supervision of a supervisor or coworker who is properly trained. WTP personnel will be trained within 6 months after their employment at or on assignment to the WTP. If personnel are assigned to a new job title or position at the WTP, any additional position-specific training will be completed within 6 months.

**General Hanford Facility Orientation:** Refer to description in Permit Attachment 5, Section 5.1.

**Contingency Plan Training:** WTP personnel receive training on applicable portions of the *Hanford Emergency Management Plan* (DOE/RL-94-02), as amended (Permit Attachment 4) in General Hanford Facility Orientation. In addition, WTP personnel receive training on the description of actions contained in the contingency plan documentation in Part III, Operating Unit Group 10, Chapter 7.0 to be able to effectively respond to WTP emergencies.

**Emergency Coordinator Training:** WTP personnel who perform emergency coordinator duties as specified in WAC 173-303-360 (e.g., the Building Emergency Director) in the Hanford Incident Command System (ICS) receive training on implementation of the contingency plan and fulfilling the position within the Hanford ICS. These WTP personnel will also become thoroughly familiar with applicable contingency plan documentation, operations, activities, location, and properties of waste handled, location of records, and the unit and building layout.

**Operations Training:** Dangerous waste management operations training (e.g., waste designation training, shippers training) will be determined on a unit-by-unit basis, and will consider the type of waste management unit and the type of activities performed at the waste management unit. For example, training provided for management of dangerous waste in containers will be different than the training provided for management of dangerous waste in a tank system. Common training required for compliance within similar waste management units can be provided in general training, and supplemented at the WTP. Training provided for WTP-specific operations are identified in both this chapter and will be included in the WTP Dangerous Waste Training Plan. The detailed course curricula descriptions will be contained in the WTP Dangerous Waste Training Plan. WTP-specific training is based on the following:

- Whether a general training course exists.
- The training needs to ensure waste management unit compliance with WAC 173-303.
- Training commitments agreed to with the Washington State Department of Ecology.

## 8.2 TASK SPECIFIC TRAINING

A properly designed training program ensures that personnel who perform duties at the WTP related to WAC 173-303-330(1)(d) are trained to perform their duties in compliance with WAC 173-303. Actual job tasks, referred to as duties, are used to determine training requirements.

- The first step taken to ensure that WTP personnel have received the proper training is to determine and document the waste management duties by job title/ and position.
- In the second step, waste management duties are compared to the general waste management unit training curriculum. If the general waste management unit training curriculum does not address the waste management duties, the training curriculum is supplemented and (or) on-the-job training is provided.
- The third step summarizes the content of a training course necessary to ensure the training addresses the appropriate waste management duties.
- The fourth and last step is to assign training curriculum to WTP personnel based on their job title and position. The WTP Dangerous Waste Training Plan will describe this process.

Waste management duties include those specified in Attachment 5 and Table 8-1, as well as those contained in WAC 173-303-330(1)(d). Training elements of WAC 173-303-330(1)(d) applicable to WTP operations include the following:

- Procedures for using, inspecting, repairing, and replacing emergency equipment and monitoring equipment.
- Key parameters for automatic waste feed cut-off systems.
- Communications or alarm systems.
- Response to fires or explosions.
- Shutdown of operations.

WTP personnel who perform these duties receive training specific to their duties. The WTP Dangerous Waste Training Plan will contain detailed course curricula for the types of training WTP personnel receive based on Attachment 5 and Table 8-1.

## 8.3 DESCRIPTION OF TRAINING PLAN

The WTP Dangerous Waste Training Plan will consist of one or more documents and a training database. As allowed under Permit Condition II.C.5.b, training records will be maintained in hard copy and/or electronic media.

In accordance with Permit Condition II.C.5.b, the WTP Dangerous Waste Training Plan is maintained outside the Permit, in the WTP Unit-Specific Files of the Hanford Facility Operating Record. Changes to the WTP Dangerous Waste Training Plan are not required to undergo a permit modification. However, any change to this chapter is required to undergo a permit modification, which may affect information contained in the training plan. Upon completion of a permit modification that updates this chapter, the permittee has 6 months to submit an updated WTP Dangerous Waste Training Plan for incorporation into the Operating Record.

In accordance with Permit Condition II.C.1, the unit-specific portion of the Permit will contain a description of the training plan.

A description of how The WTP Dangerous Waste Training Plan meets the requirements in WAC 173-303-330(2) is as follows:

1. -330(2)(a): “The job title, job description, and name of the employee filling each job. The job description will include requisite skills, education, other qualifications, and duties for each position.”

**Description:** The specific WTP personnel job title and position is correlated to the waste management duties. Waste management duties relating to WAC 173-303 are correlated to training courses to ensure training is properly assigned.

Only names of WTP personnel who perform duties relating to waste management operations at the WTP are required to be maintained. Names are maintained as described in the WTP Dangerous Waste Training Plan. A list of personnel assigned to the WTP is available upon request.

Information on requisite skills, education, and other qualifications for job title and positions are addressed by providing a reference where this information is maintained (for example, Human Resources). Specific information concerning job title, requisite skills, education, and other qualifications for personnel can be provided upon request.

2. -330(2)(b): "A written description of the type and amount of both introductory and continuing training required for each position."

   **Description:** In addition to the outline provided in Section 8.0, training courses developed to comply with the introductory and continuing training programs are identified and described in the WTP Dangerous Waste Training Plan. As discussed above in Section 8.1, the training plan will be updated to include detailed course curricula for the types of training WTP personnel receive based on the outline in Section 8.0. The type and amount of training is specified in the training plan. Table 8-1 is included as an example of a typical training matrix that shows typical job/titles and positions matched to a training category. The WTP Training Plan will be developed and submitted in accordance with Permit Condition III.10.C.7, and will include dangerous waste management related job titles and position descriptions, and the type and amount of initial, refresher, and on-the-job training required for each.

3. -330(2)(c) and 330(3): "Records documenting that personnel have received and completed the training required by this section. The Department may require, on a case-by-case basis, that training records include employee initials or signature to verify that training was received."

   **Description:** Training records are maintained consistent with Permit Attachment 5, Section 8.5.5 and WAC 173-303-330(3).

## 8.4 CONTINUING TRAINING

Initial and continuing training programs are also designed to prepare personnel during the operations phase, and to manage and maintain the WTP in a safe, effective, and environmentally sound manner. In addition to preparing personnel to manage and maintain the WTP under normal conditions, the training programs ensure that personnel are prepared to respond in a prompt and effective manner should off normal or emergency conditions occur. Emergency response training is consistent with the description of actions contained in Part III, Operating Unit Group 10, Chapter 7.0, Contingency Plan. The introductory and continuing training programs are intended to meet the following objectives:

- Teach WTP personnel to perform their duties in a way that ensures the WTP's compliance with WAC 173-303 and this permit
- Teach WTP personnel dangerous waste management procedures (including implementation of the contingency plan) relevant to the job titles and positions in which they are employed
- Ensure that WTP personnel can respond effectively to emergencies
- Ensure that the WTP training program is reviewed annually to meet the requirements in WAC 173-303-330(1)(b).

Continuing training meets the requirements for WAC 173-303-330(1)(b) and includes general facility training and unit specific training, as specified below.

**General Hanford Facility Orientation:** Annual refresher training is provided for general Hanford Facility training. Refer to description in Permit Attachment 5, Section 5.1.

**Contingency Plan Training:** Annual refresher training is provided for contingency plan training. Refer to description above in Section 8.1.

**Emergency Coordinator Training:** Annual refresher training is provided for emergency coordinator training. Refer to description above in Section 8.1.

**Operations Training:** Refresher training occurs on various frequencies for operations training (i.e., annual, every other year, every 3 years). When justified, some training will not contain a refresher course and will be identified as a one-time-only training course.

## 8.5 TRAINING PROGRAM ADMINISTRATION

The WTP Project Training Department is responsible for identifying the appropriate training requirements specified in Attachment 5 and Table 8-1 to ensure that personnel are trained, qualified, and capable of performing their assigned tasks. Project Training is also responsible for providing the support necessary to ensure that personnel are qualified to safely and effectively meet job requirements.

## 8.6 JOB TITLE AND JOB DESCRIPTION

The job titles and job positions are specified in Attachment 5 and categorized in Table 8-1.

## 8.7 DOCUMENTATION AND RECORD RETENTION

All personnel training records at the WTP facility will be recorded and maintained in the WTP Unit operating record, (Hanford Facility Operating Record), and will be kept onsite or at the permittee's offices located in Richland, Washington, per recordkeeping requirements in Permit Condition II.I and WAC 173-303-380.

**Table 8-1 Example WTP Training Matrix**

| Training Category[a] | | | | | | | | |
|---|---|---|---|---|---|---|---|---|
| **Permit Attachment 5 Training Category** | **General Hanford Facility Training** | **Contingency Plan Training** | **Emergency Coordinator Training** | **Operations Training** | | | | |
| **WTP DWTP Implementing Category** | **Orientation Program** | **Emergency Management Plan** | **Emergency Coordinator Training** | **General Waste Mgmt** | **Container Mgmt** | **Tank System Mgmt** | **Containment Buildings Mgmt** | **Misc Unit Mgmt** |
| **Example Job Title/Position** | | | | | | | | |
| Operators | X | X | | X | | X | X | X |
| Shift Operations Manager | X | X | X | X | X | X | X | X |
| Hazardous Waste Operations (HWO) Manager | X | X | | X | X | X | X | X |
| Operations Manager | X | X | X | X | | | | |
| Environmental Compliance Officer | X | | | X | | | | |
| Waste Service Provider | X | | | X | X | | | |
| Hazardous Waste Operators | X | X | | X | X | X | X | X |
| Laboratory Technician –Hazardous Waste Operations (HWO) | X | X | | X | X | | | |
| Laboratory Technician | X | X | | | | | | |
| Laboratory Manager | X | X | X | | X | | | |

[a] Refer to the WTP Dangerous Waste Training Plan for a complete description of coursework in each training category.

This page intentionally left blank.

# WASTE TREATMENT AND IMMOBILIZATION PLANT
# CHAPTER 11.0
# CLOSURE PLAN

## CHANGE CONTROL LOG

Change Control Logs ensure that changes to this unit are performed in a methodical, controlled, coordinated, and transparent manner. Each unit addendum will have its own change control log with a modification history table. The "**Modification Number**" represents Ecology's method for tracking the different versions of the permit. This log will serve as an up to date record of modifications and version history of the unit.

Modification History Table

| Modification Date | Modification Number |
|---|---|
| 09/05/2017 | 8C.2017.6F |
| 03/01/2017 | 8C.2016.Q4 |
| 05/23/2016 | 8C.2016.Q1 |
| | |

This page intentionally left blank.

# CHAPTER 11.0
# CLOSURE PLAN

This page intentionally left blank.

# CHAPTER 11.0
# CLOSURE PLAN

## TABLE OF CONTENTS

11.0 Introduction ..... 5
11.1 Closure Plan Overview ..... 5
11.1.1 Closure Plan Revisions ..... 6
11.2 Closure Performance Standard ..... 7
11.2.1 Closure Standards for Soils, Groundwater, Surface Water, and Air ..... 10
11.2.2 Closure Standards for Decontamination of Structures and Equipment ..... 11
11.2.3 Closure Standards for Tank Systems ..... 12
11.2.4 Closure Standards for Container Storage Areas ..... 13
11.2.5 Closure Standards for Containment Buildings ..... 14
11.2.6 Closure Standards for Miscellaneous Units ..... 14
11.3 Closure Activities ..... 14
11.3.1 Maximum Extent of Operations ..... 18
11.3.2 Removing Dangerous/Mixed Waste ..... 19
11.3.3 Decontaminating Structures, Equipment, and Soils ..... 20
11.3.4 Sampling and Analysis to Identify Extent of Decontamination/Removal and to Verify Achievement of Closure Performance Standard ..... 23
11.4 Other Activities ..... 24
11.4.1 Certification of Closure ..... 24
11.4.2 Run-on and Runoff Control ..... 25
11.4.3 Equipment Reuse ..... 25
11.5 Maximum Waste Inventory ..... 25
11.6 Closure of Tanks, Container Storage, Containment Buildings, and Miscellaneous Units ..... 25
11.6.1 Closure of Tank Systems ..... 26
11.6.2 Closure of Container Storage Areas ..... 28
11.6.3 Closure of Containment Building Units ..... 28
11.6.4 Closure of Miscellaneous Units ..... 29
11.7 Schedule for Closure ..... 29
11.8 Extension for Closure Time ..... 30

## FIGURES

Figure 11-1 Sample Clean Debris Surface Checklist ..... 33
Figure 11-2 Closure Strategy Flowchart for Tank Systems ..... 35
Figure 11-3 Closure Strategy for Container Storage, Containment Building, Miscellaneous Unit, and Tank System Secondary Containment Areas ..... 36
Figure 11-4 Closure Strategy Flowchart for Soils and Groundwater ..... 37
Figure 11-5 Example Closure Certification Statement ..... 39
Figure 11-6 WTP Permitting, Deactivation, and Closure ..... 41
Figure 11-7 Closure Schedule for WTP ..... 43

## TABLES

Table 11-1 Maximum Waste Inventory ..... 32
Table 11-2 Clean Closure Performance Standards and Activities ..... 32

# CHAPTER 11.0
# CLOSURE PLAN

**Note:** Where information regarding treatment, management, and disposal of the radioactive source byproduct material and/or special nuclear components of mixed waste (as defined by the Atomic Energy Act of 1954 as amended) has been incorporated into this document, it is not incorporated for the purpose of regulating the radiation hazards of such components under the authority of this permit or chapter 70.105 RCW and its implementing regulations but is provided for information purposes only.

This chapter is the Resource Conservation and Recovery Act (RCRA) closure plan for the River Protection Project Waste Treatment Plant (WTP) permitted dangerous waste management units (DWMUs), as required per the *Washington Administrative Code* (WAC) 173-303-806(4)(a)(xiii). This closure plan describes the activities that are necessary to close the WTP permitted DWMUs. The procedures and estimated times to complete these activities are discussed in this plan. Submittal of this closure plan completes the requirement of III.10.C.8.b and Compliance Schedule Item 8.

This closure plan is provided in compliance with the applicable requirements of the WAC 173-303-610, -620, and -806. This plan is also intended to demonstrate compliance with Conditions II.J and III.10.C.8 of the Hanford Facility Dangerous Waste Permit (Ecology 2009).

With several exceptions, this plan follows the format of a typical closure plan as outlined in the *Dangerous Waste Permit Application Requirements For facilities that store and/or treat dangerous wastes in tank systems and/or containers. Washington State Department of Ecology Hazardous Waste and Toxics Reduction Program Publication 95-402 (Ecology 2013).* The exceptions are the exclusion of sections that do not apply to the WTP (financial assurance, liability, "already closed disposal unit," and post-closure requirements), and the addition of new sections not addressed in the guidance (closure of tank, miscellaneous unit, container storage, and containment building units).

## 11.0 INTRODUCTION

This closure plan identifies the steps and procedures necessary to close any WTP permitted DWMU at any point in its active life. This includes the removal of dangerous and mixed waste and the decontamination of the permitted DWMU, ancillary equipment, and the associated secondary containment systems. The RCRA closure activities will be consistent with the requirements of the WTP deactivation, decontamination, and decommissioning plan to be prepared under separate authorities. They will be revised as necessary to maintain consistency between the plans. Deactivation of the WTP is discussed further in Sections 11.3.2 and 11.7.0.

## 11.1 Closure Plan Overview

Mixed waste will be handled and stored in the following areas of the WTP, as identified in the Dangerous Waste Permit (DWP) and Chapter 4:

- Pretreatment plant building
- WTP portion of the waste transfer lines from the double-shell tank (DST) system
- Intra-facility transfer lines between WTP buildings
- WTP portion of the effluent transfer lines from the WTP to the Liquid Effluent Retention Facility (LERF)
- Low Activity Waste (LAW) vitrification building
- High-Level Waste (HLW) vitrification building

- Laboratory
- Effluent Management Facility (EMF)
- Failed Melter Storage

The permitted DWMUs in the WTP are identified in Chapter 4. The WTP permitted DWMUs, including ancillary equipment, secondary containment areas, supporting structures and underlying soil, are addressed in this closure plan. Closure of the pipelines connecting the WTP with the DST system unit and the Liquid Effluent Retention Facility/Effluent Treatment Facility (LERF/ETF) will be integrated with those respective facilities. Closure criteria will be developed jointly by United States Department of Energy (DOE), its contractors, and Ecology prior to initiating closure activities. DOE will be responsible for implementing the cleanup standards.

The closure plan indicates several potential Hanford treatment, storage, and disposal (TSD) units that may be used to manage dangerous and mixed wastes generated during closure of the WTP permitted DWMUs. These identifications are preliminary and are subject to change as the Hanford facility is developed, and as the Hanford Facility Dangerous Waste Permit (Ecology 2009) is modified in the future.

The remainder of the closure plan provides the following information:

Section 11.2.0 of the closure plan identifies the regulatory standards that apply to closure, and the processes to be used for developing specific cleanup standards that may be achieved during closure.

Section 11.3.0 describes the overall approach for removing the mixed waste inventory, flushing and decontamination operations, removing and disposing of contaminated equipment and residues, and inspections and sampling to verify clean closure.

Section 11.4.0 describes other activities, including certification of completion of closure, control of run-on and runoff during closure, and equipment reuse.

Section 11.5.0 provides the maximum possible mixed waste inventory.

Section 11.6.0 describes the closure procedures for each type of permitted DWMU.

Section 11.7.0 provides the schedule for closure.

Section 11.8.0 describes the demonstration required to support a request to extend the standard 90- and 180-day mixed waste removal and closure completion time limits, as specified in WAC 173-303-610(4)(a) and (b).

### 11.1.1 Closure Plan Revisions

Clean closure is the goal for the WTP permitted DWMUs. The closure plan will be revised if efforts to achieve the clean closure standards are unsuccessful. The WTP may also be closed as a landfill, as provided in WAC 173-303-610, if the clean closure standards cannot be achieved through the removal of radiological contamination levels and the closure performance standards cannot be achieved. The revised closure plan will be accompanied by a written request for modification of the permit.

The design life of the WTP is 40 years after the initiation of waste treatment operations. The actual operating life of the plant may change depending on expansion in treatment capacity, improvements in treatment technology, or many other factors. The closure plan will be revised and submitted for approval under WAC 173-303-830 (Permit Changes) to incorporate future advances in decontamination technology, changes in plant capacity, newly designated dangerous waste, or other factors that may affect the closure of the WTP permitted DWMUs.

The closure plan may also be revised before the start of closure work, based on relevant information from the operational history of the WTP and the permitted DWMUs, and when information such as

decontamination and access of high rad areas becomes available. The final revised closure plan will provide the necessary final detailed decontamination schedule and procedures, sampling and analysis plan, health and safety plan, interface with DST system unit and LERF/ETF closure plans, and additional information dependent on future conditions, as indicated in the following pages. Also, if necessary, a post-closure plan presenting details of any post-closure processes and activities will be submitted to Ecology in accordance with WAC 173-303-610(8).

## 11.2 Closure Performance Standard

The WTP permitted DWMUs will be closed in accordance with the requirements of Conditions II.J and III.10.C.8 of the Hanford Facility Dangerous Waste Permit (Ecology 2009). Clean closure requires decontamination or removal and disposal of dangerous/mixed waste, waste residues, contaminated equipment, soil, or other material, in accordance with the clean closure performance standards of WAC 173-303-610(2). Clean closure as described in this closure plan will accomplish the following:

- Minimize the need for future maintenance.
- Control, minimize, or eliminate, to the extent necessary to protect human health and the environment, post-closure escape of dangerous waste, dangerous constituents, leachate, contaminated runoff, or dangerous waste decomposition products, to the ground, surface water, groundwater, or the atmosphere.
- Return the land to the appearance and use of the surrounding land areas to the degree possible given the nature of the previous dangerous waste activity.

Activities beyond that point will be decided and documented in the revised plan prior to closure. The WTP buildings will not be used for RCRA-regulated TSD activities following clean closure, unless a new permit is issued.

The appearance of the land where the WTP buildings are located will be consistent with the appearance and future use of the surrounding processing land areas, after completion of clean closure activities. The WTP buildings will remain at the site until final disposition is determined and implemented. The WTP buildings may be demolished, if the buildings will have no future mission. Future land use decisions may be considered during the WTP decommissioning process. The final decision on building disposition and the appearance and use of the plant area will be integrated with the decisions on disposition of the buildings in the adjacent 200 East Area.

The long-term future use of the WTP site and the adjacent 200 Areas was addressed in the *Final Hanford Comprehensive Land-Use Plan Environmental Impact Statement* (DOE 1999). The Central Plateau as defined in that document includes the United States Ecology commercial waste disposal facility, the DOE Environmental Restoration and Disposal Facility (ERDF), and the 200 West and 200 East Areas, as well as the WTP site.

Permitted units where mixed or dangerous wastes have been treated or stored will undergo closure activities. Contaminated equipment, debris, and solid decontamination residues generated during the closure of the WTP permitted DWMUs will be designated and packaged in accordance with the appropriate regulatory requirements (expected to be the WAC dangerous waste regulations in effect at the time of closure). The dangerous and mixed waste will then be transferred to a permitted TSD unit either on or off the Hanford Site. Equipment and debris that are not adequately decontaminated will be treated to comply with land disposal restriction requirements. Liquid decontamination solutions or agents generated during closure activities will be collected, designated, and disposed of at an appropriate TSD unit.

If a product, residual waste, or decontamination fluid is spilled or released to the environment during closure activities, spill response will be initiated as described in Chapter 7 Contingency Plan, and in accordance with WAC 173-303-145(2) and 173-303-360(2)(d) reporting requirements. The residual

waste will be collected, designated, and managed appropriately. The waste will be managed in accordance with the appropriate regulatory requirements.

## Clean Debris Surface

This closure plan proposes use of a "clean debris surface," defined in the following paragraph, as the clean closure performance standard for the WTP metal structures and equipment and concrete structures that will remain after closure, as well as all of the DWP equipment used for waste management; Attainment of a clean debris surface can be verified visually in accordance with the standard in WAC 173-303-610(2)(b)(ii), incorporating 40 CFR 268.45, Table 1, footnote 3, which states:

> "Clean debris surface" means that the surface, when viewed without magnification, will be free of all visible contaminated soil and hazardous (dangerous) waste except that residual staining from soil and waste consisting of light shadows, slight streaks, or minor discolorations, and soil and waste in cracks, crevices, and pits may be present provided that such staining and waste and soil in cracks, crevices, and pits will be limited to no more than 5 % of each square inch of surface area."

The clean debris surface standard will be achieved by using the physical and chemical extraction techniques identified in 40 CFR 268.45, Table 1, incorporated by reference WAC 173-303-140. The primary method of decontamination may be water washing, followed by a choice of using chemical decontamination solutions, ultrahigh-pressure water technologies, impact technologies such as sand blasting and $CO_2$ blasting, or other new technologies that may be developed prior to closure. Also, to meet this standard the surface layer may be need to be removed using mechanical equipment such as striking piston heads, saws or rotary grinding wheels, or scabbling equipment. The concrete surface will then be examined to meet the requirement for clean debris surface. These physical extraction methods that remove up to 0.6 cm of concrete will be used only after the previous technologies have failed to result in a clean-debris surface, or if there has been a failure of the coated concrete surface. Visual verification may be performed by direct worker observation with written inspection documentation (Figure 11-1, Sample Clean Debris Surface Checklist), or by other means such as remote-operated closed circuit television (CCTV) and videotape.

Concrete surfaces may be protected with a contamination-resistant protective coating. Protective coatings in good condition may be decontaminated using one of the technologies described above, then inspected to determine if a clean debris surface is present in the same manner as steel or other metal surfaces. If there is evidence that a dangerous/mixed waste release has occurred, such as confirmation of contamination behind a stainless-steel lined breach or identification of damaged or deteriorated protective coating on a concrete floor where a dangerous/mixed waste release has occurred, and if the concrete is adjacent to soil, a contamination investigation may be performed.

If the concrete protective coating exhibits more damage than hairline cracks and has lost integrity, the concrete surface under the deteriorated coating will be treated with aggressive physical extraction technologies, such as high pressure water or scabbling, to remove at least 0.6 cm of material below the original surface. This approach also applies to uncoated concrete behind or beneath stainless-steel liners. The exposed concrete will again be inspected to verify that the clean debris surface standard is met. The treatment will be repeated until the clean debris surface standard is met. Closure standards for soil underlying the WTP are addressed in Section 11.2.1.

If the clean debris surface standard as described cannot be performed or cannot not be achieved, an alternative method will be proposed in the revised Closure Plan as required by DWP Conditions III.10.C.8.c and III.10.C.8.d.

## Risk Based Clean Up Standard

Some waste handling equipment metal surfaces cannot be visually inspected (for example, internal pipe, pump, and tank surfaces). A component or portions of a component may be flushed with

decontamination solutions if it cannot be decontaminated to meet the clean debris surface standard, or if it cannot be inspected to verify that it meets the standard. The decontamination solution, or rinsate, will be sampled and analyzed using methods complying with *Test Methods for Evaluating Solid Waste, Physical Chemical Methods* (EPA 1986) for indicator constituents. Analytical data that meet the criteria defined in WAC 173-303-610(2)(a) and (b) will indicate successful decontamination and attainment of the clean closure performance standard. The rinsate analysis criterion is hereafter referred to as the risk based clean up standard.

## Closure Strategy for Tank Systems

The general closure strategy for tank systems is outlined in flowcharts in Figures 11-2 and 11-3. Triple-rinsing followed by visual inspections is an accepted method of decontaminating tanks. However, modification of this technique may be necessary, if determined at a later date.

Figure 11-2 shows that internal flushing and decontamination of tanks and ancillary equipment, inspection of the secondary containment area, and sealing of observed stainless-steel lined breaches will be performed prior to final decontamination efforts. Disposition of solid and liquid treatment residuals is shown only at the initial flushing step (below "flush tanks, piping"), to avoid unnecessary complexity in Figure 11-2. The residuals from the following internal and external decontamination steps are expected to follow the same paths.

The two "more decon?" decision boxes in Figure 11-2 (following determinations that decontamination efforts so far have been inadequate) are the symbols for the key decisions the future closure managers may have to make:

1. Perform additional decontamination to meet the clean closure standard.
2. Stop decontamination and designate that tank or ancillary equipment as mixed waste debris to be removed, reduced in size, encapsulated, packaged, and disposed.

Figure 11-2 does not show that additional decontamination of external tank or other surfaces may be required to continue on the disposal path (after "remove, dispose of as mixed waste") because such additional decontamination, if required, will be due to radiological dose concerns, not dangerous/mixed waste requirements. Figure 11-2 also illustrates the assumption that internal surfaces of tanks and ancillary equipment cannot be adequately or efficiently decontaminated and/or inspected to demonstrate that the clean debris surface standard is met, and that the decontamination solution or rinsate risk based clean up standard will apply to all internal tank system surfaces.

## Closure Strategy for Secondary Containment Areas

Figure 11-3 shows the strategy for closure of secondary containment areas. These steps illustrate the approach for decontaminating stainless steel liners and coated concrete surfaces. Secondary containment area liner breaches may need to be sealed prior to decontamination or removal of equipment. The general procedure for investigating liner breaches or breaks, and decontaminating the concrete behind or below such breaches, is shown in Figure 11-3. The closure strategy for concrete with intact protective coatings is straightforward. If a release of dangerous or mixed waste in the permitted unit has not been documented in the facility operating record, and no evidence of a release is found during the initial closure inspection, the assumption will be made that the concrete floor surface meets the clean debris surface standard.

If a release has been documented, and the concrete does not meet the clean debris standard, decontamination technologies, as described in Section 11.2.0, will be performed until the clean debris standard can be met and documented.

If evidence is found that a release has occurred on a concrete floor where the protective coating has even minor cracking, physical extraction will be required. Physical extraction of the concrete surface may also be required if sampling of the area determines there is dangerous waste contamination in areas where the

protective coating is substantially damaged or deteriorated; for example, if it is broken or peeling. The extraction will be followed by an inspection and sampling of the surface to verify and document the presence of a clean debris surface. If a release is documented at such a location and the concrete at that location is resting on or against soil, soil sampling may be required. These steps are illustrated in the last two boxes before the final decision box, "Visible Crack or Decomposed Concrete?" in Figure 11-3.

Closure Strategy for Soil

The criteria for determining whether additional soil sampling is required are shown in Figure 11-4. Contaminated soil will be removed to meet risk-based concentration limits, referred to as the soil cleanup limits (see Section 11.2.1). Soil sampling and analyses will be performed after removal to verify compliance with the soil cleanup standard. Figure 11-4 shows the strategy for addressing potential impacts to soil.

Compliance with this plan and attainment of the closure standards will be documented by electronic media or written inspection records, such as those shown in the sample checklist in Figure 11-1, the example Closure Certification Statement in Figure 11-5, and other supporting records as discussed in Section 11.4.1.

### 11.2.1 Closure Standards for Soils, Groundwater, Surface Water, and Air

The design of the WTP mixed waste management units is intended to prevent the release of dangerous/mixed waste to the soil, groundwater, surface water, or air. Clean closure of the soil beneath the WTP mixed waste management units will be accomplished by demonstrating that the stainless-steel process cell liners, and the coated concrete walls and floors in the secondary containments, have not lost integrity and have therefore prevented contaminants from reaching the soil. If loss of secondary containment integrity has occurred, the potential for soil contamination will be investigated. The demonstrations will consist of performing and documenting inspections and decontamination work, and soil sampling and removal, if necessary.

The need for sampling of soil will be determined on a unit-specific basis in accordance with WAC 173-303-610(2)(b)(i), and will take into consideration the mixed waste management unit operating history.

Where a dangerous/mixed waste release is known or suspected to have occurred, the following conditions indicate probable secondary containment failure and potential soil contamination: the observation of potential through-thickness cracks or crumbling concrete at a liner breach location or in a secondary containment area with deteriorated concrete floor coating. Potential soil contamination will be investigated through coring and sampling of both the concrete and the soil. Biased sampling will be focused in the vicinity of the liner defect or coating defect, concrete cracks, or in the known or suspected release location. Samples will be analyzed for constituents of concern (COCs). The proposed COCs will be submitted to Ecology with the revised closure plan submitted before the start of closure. The COCs to be used will be developed using process knowledge, operating record, and waste characterization analyses, whenever possible.

The appropriate risk-based cleanup standard will be consistent with the future land-use classification. The standard will be reviewed prior to initiating closure to ensure it is still appropriate. Clean closure concentration limits for soils will be established in accordance with WAC 173-303-610(2)(b)(i). Given the long operating life of the WTP and the current state of assumptions for toxicity data, and regulatory guidance, calculation of specific limits is not appropriate at this time.

In establishing soil clean closure concentration limits, consideration will also be given to "area background", as defined in Ecology's *Guidance on Sampling and Data Analysis Methods* (Ecology 1995) and in accordance with WAC 173-303-610(3)(a)(v). The *TWRS Phase 1 Privatization Site Preconstruction Characterization Report* (HNF 1998), the *Hanford Site Background Part 1, Soil*

*Background for Nonradioactive Analytes* (DOE/RL 1995), or other site-specific soil background information will be used to assist in determining background levels in the soil. If the closure soil sample data are at or below the calculated soil cleanup levels, or the site-specific background concentrations, whichever is greater for each constituent, the soil will be considered clean-closed.

Due to the level of secondary containment provided at the WTP, non-permitted releases of dangerous/mixed wastes to soil, groundwater, surface water, or air are not anticipated.

Areas in which soil could have become contaminated will be mapped during the liner or concrete secondary containment area inspection and decontamination process. Soil sampling is addressed in Appendix A, Sampling and Analysis for Closure of WTP Facility (SAP). As necessary, a more detailed sampling and analysis plan may be included in a future revision to the closure plan in accordance with DWP Conditions III.10.C.8.c and III.10.C.8.d. The revised closure plan will be submitted to Ecology for review and approval prior to the initiation of closure. The current SAP is consistent with the Guidance for Clean Closure of Dangerous Waste Units and Facilities (Ecology 2005), as incorporated by reference at WAC 173-303-140(2)(a).

### 11.2.2 Closure Standards for Decontamination of Structures and Equipment

Some of the dangerous/mixed waste-contaminated structures and ancillary equipment that will undergo decontamination during the closure of the WTP consist of equipment with smooth metal surfaces. Concrete and protective coating surfaces in secondary containment areas with stainless-steel liners will also be decontaminated as part of closure. The types of structures and associated equipment that may be decontaminated to meet the clean debris surface standard include, but are not limited to:

- Interior and exterior tank and pipe surfaces
- Secondary containment area stainless steel liners
- Uncoated concrete floors and walls behind stainless-steel liners
- Coated concrete walls and ceilings above stainless-steel lined secondary containment, as necessary
- Coated concrete floors in secondary containment areas

Decontamination of interior surfaces of tanks and pipes and documentation that they meet the clean debris surface standard may or may not be possible, given the current state of decontamination and inspection technologies. At present, the available equipment may not be adequate to remove hardened waste or contaminated corrosion coatings from relatively inaccessible interior tank and pipe surfaces. Similarly, available video equipment may not provide the inspection capability necessary to demonstrate attainment of the clean debris surface standard on interior surfaces. The criteria for whether or not decontamination is possible will be developed and submitted for approval prior to initiating closure activities. In addition, for areas such as the PT and HLW Facility Black Cells and Hot Cells, they are currently provided with spare penetrations that can be used for spray wands if needed during closure activities to facilitate dangerous waste decontamination. If, after decontamination, safe physical access in black cells is not available to perform visual verification during the closure period to determine if the use of the clean debris surface standard, which requires visual verification, other technologies such as remote operated CCTVs may be used.

Decontamination of equipment and stainless-steel lined secondary containment or liners will be conducted by using water washing and spraying or ultrahigh-pressure water jetting, or other technologies listed in Section 11.3.0. Residues from these extraction operations will be collected, sampled in accordance with WAC 173-303, and transferred to a TSD facility such as the LERF/ETF or the Central Waste Complex (CWC) for treatment, storage, and/or disposal.

Decontamination of intact secondary containment protective coating surfaces on concrete to meet the clean debris surface standard will also be performed primarily through water washing and spraying.

Additional technologies that may be used include chemical decontamination solutions, ultrahigh-pressure water technologies, impact technologies such as sand blasting and $CO_2$ blasting, or other new technologies that may be developed prior to closure. The secondary containment protective coating on concrete is designed and applied to provide a durable, non-porous surface. If decontamination of the impermeable protective coating surface in secondary containment areas cannot be completed through chemical extraction, or if the protective coating has broken, cracked, or peeled away from the concrete, then at least 0.6 cm (0.24 inches) of the underlying concrete will be removed using one or more of the physical extraction technologies. The physical extraction performance standard for concrete is removal of 0.6 cm of the surface layer and treatment to a clean debris surface, as noted in the *Guidance for Clean Closure of Dangerous Waste Units and Facilities* (Ecology 2005), Section 5.6, and as noted in 40 CFR 268.45, Table 1, as incorporated by reference at WAC 173-303-140(2)(a).

Metal surface areas of equipment that cannot be documented to meet the clean debris surface standard may be decontaminated using water washing, followed by a choice of chemical decontamination solutions, ultrahigh-pressure water technologies, impact technologies such as sand blasting, or other new technologies that may be developed prior to closure. Rinsate may be sampled and analyzed, using methods complying with *Test Methods for Evaluating Solid Waste, Physical Chemical Methods* (EPA 1986) for Ecology-approved indicator constituents. If other analytical methods are developed and chosen for use, the closure plan will be revised and submitted for approval. Indicator will be determined on the basis of process knowledge, operating record, and waste characterization analyses, whenever possible.

Analytical data less than risk-based limits will indicate successful decontamination and attainment of the clean closure performance standard for the tank, piping, or other metal structures and equipment. Documentation of the sample and laboratory quality control and quality assurance data will be entered into the closure record as specified in Sections 11.3.4 and 11.4.1. Concrete and protective coated concrete surfaces will not be addressed using risk-based limits.

If the metal structure or equipment cannot be considered decontaminated using the clean debris surface or risk-based limit criteria, or if further decontamination is determined to be impractical due to high radiation levels, waste minimization, cost considerations, or other reasons, it will be packaged using the debris treatment standard for immobilization by encapsulation. The waste will be designated on the basis of process knowledge and transported to a permitted dangerous or mixed waste disposal facility such as Hanford Low Level Burial Ground (LLBG) mixed waste trenches. Examples of equipment that may undergo encapsulation and disposal include, but are not limited to:

- Tanks and pipes
- Melter off-gas duct work, scrubber, condenser, precipitator, and washout holding vessels
- Pumps, agitators, wash rings, and ejectors

Contaminated items and solid decontamination residues removed from the WTP permitted DWMUs will be designated, packaged, and treated as necessary to meet the waste acceptance criteria of the receiving facility. Sampling of items and solid residues known to be contaminated and intended for disposal is not necessary if process knowledge is adequate to accurately designate the wastes with the proper dangerous waste identification codes. The closure plan will be revised prior to start of closure and will address treatment and disposal plans in more detail.

### 11.2.3 Closure Standards for Tank Systems

At closure of a tank system, the owner or operator is required by WAC 173-303-640(8)(a) to remove or decontaminate dangerous/mixed waste residues, contaminated secondary containment system components (such as liners), contaminated soils, and structures and equipment contaminated with dangerous/mixed waste, and manage them as dangerous/mixed waste, with few exceptions.

For the purposes of the WTP RCRA closure, the standard is interpreted to mean that each tank and associated ancillary equipment, including the secondary containment area, will meet the clean debris surface standard and/or risk-based limit criteria for rinsate. Indicator constituents or COCs to be used for rinsate evaluation will be determined using process knowledge, including consideration of the available waste characterization data, and other relevant information in the facility operating record.

Inspectable surfaces may be declared clean if they meet the definition of a clean debris surface, including portions of concrete secondary containment with intact protective coating surfaces, and physically-extracted concrete surfaces behind stainless-steel lined breaches, or under abraded or loose protective coating that have had at least 0.6 cm of material removed from the original surface. Rough or inaccessible metal surfaces such as corroded tank secondary containment area liner surfaces, or tank and pipe interior surfaces, may be declared clean when the decontamination solution sample is analyzed, with appropriate quality control and quality assurance as noted in Section 11.3.4, and the indicator parameter or COC data are determined to be less than or equal to the risk-based limits.

If decontaminating a tank system in place is not feasible or is ineffective, an alternative method is to remove the tanks, disassemble them, and decontaminate the tank parts using extraction technologies described under alternative treatment standards for hazardous debris (40 CFR 268.45), as incorporated by reference at WAC 173-303-140(2)(a). With Ecology's concurrence, the decontaminated debris can then be disposed of as non-dangerous (but possibly controlled as radioactive) waste, as indicated in Section 5 of *Guidance for Clean Closure of Dangerous Waste Units and Facilities* (Ecology 2005).

Tank systems will be inspected for compliance with the clean debris surface standard by observing the external and internal metal surfaces. Portions of a tank system that cannot be fully inspected (such as interior surfaces of tanks and attached piping, pumps, ejectors, and welded pipe connections or penetrations) or that may pose as low as reasonably achievable (ALARA) compliance problems, may be decontaminated with chemical or physical extraction technologies. The decontamination solutions from these portions of the system will be sampled and analyzed for indicator parameters, and the results will be compared to waste risk-based limits. Solid residues will be removed, containerized, designated, and disposed of at a permitted disposal facility as required. The tank or ancillary equipment, if not decontaminated to meet clean debris standard, will be removed, treated as necessary, and disposed of in a permitted landfill. Treatment may include macro-encapsulation or micro-encapsulation, or other processes that comply with land disposal restrictions.

Standards for clean closure of tank system secondary containment are identical to standards for decontamination of secondary containment areas for the container storage, containment building, and miscellaneous units; that is, clean debris surface standard and/or risk-based limits.

The proposed COCs will be submitted to Ecology and finalized in the revised closure plan to be submitted before the start of closure.

### 11.2.4 Closure Standards for Container Storage Areas

In addition to the requirements of WAC 173-303-610, WAC 173-303-630(10) requires that at closure, dangerous/mixed waste and residues will be removed from the secondary containment system. Remaining containers, liners, bases, and soil contaminated with dangerous/mixed waste or residues will be decontaminated or removed.

Standards for clean closure of container storage secondary containment are identical to standards for decontamination of secondary containment areas for the tank system, containment building, and miscellaneous units (that is, clean debris surface standard and/or risk-based limits). Special requirements for clean closure of several secondary containment areas with coated concrete floors were explained in Section 11.2.2.

### 11.2.5 Closure Standards for Containment Buildings

At closure of a containment building system, the owner or operator is required by WAC 173-303-695 (incorporating 40 CFR 264.1102(a)) to remove or decontaminate dangerous/mixed waste residues, contaminated secondary containment system components (such as liners), contaminated soils, and structures and equipment contaminated with waste and leachate, and manage them as dangerous waste, unless WAC 173-303-070(2)(a)(ii) applies.

Standards for clean closure of containment building units are identical to standards for decontamination of secondary containment areas for the tank system, container storage, and miscellaneous units (that is, clean debris surface standard and/or risk-based limits).

### 11.2.6 Closure Standards for Miscellaneous Units

The owner or operator is required by WAC 173-303-680(2) to close miscellaneous units in a manner that will ensure protection of human health and the environment. Miscellaneous units at WTP include, but are not limited to, melters, scrubbers, condensers, precipitators, reboilers, oxidizers, adsorbers, and filters. The LAW and HLW melters will be removed and replaced several times during the operational life of the WTP. Removal and replacement are not considered closure or partial closure activities. Melters may be replaced according to the schedule based on the design life of the melter components, or replaced when unplanned failure of a component occurs. In either case, ancillary equipment will be removed or disconnected from the melter after molten glass has been removed to the maximum practical extent.

Openings to the LAW locally shielded melter (LSM) will be sealed and the melter will be removed from the LAW vitrification building, after surface decontamination, as a single container.

Spent HLW melters will be placed in a specially designed shield overpack and then removed from the HLW vitrification building to a disposal facility. Failed melters will be placed in the WTP failed melter storage building (container storage area).

Spent LAW and HLW melters may also be stored in the WTP failed melter storage building (container storage areas) if necessary to accommodate scheduling of treatment and disposal operations, or for other reasons. The melters will be shipped to permitted treatment and disposal facilities. Standards for clean closure of the miscellaneous unit secondary containment areas are identical to standards for decontamination of secondary containment areas for the tank system, container storage, and containment building units (that is, the clean debris surface standard and/or risk-based limits).

## 11.3 Closure Activities

This section describes closure activities that will be conducted to meet the clean closure performance standards. Details provided here may change, and if necessary, the plan will be revised to reflect those changes. The facility is scheduled to close at the end of its operating life. If the WTP is shut down prior to this time, an updated closure plan will be submitted prior to start of closure activities. If partial closures of the WTP mixed waste management units are necessary, updates to the closure plan will be submitted prior to initiating closure activities.

Section 11.3.1 describes the maximum extent of operations. Section 11.3.2 describes the process for removing dangerous (mixed) wastes from permitted units. Section 11.3.3 identifies several chemical and physical extraction technologies that may be used to achieve the clean debris surface standard. Section 11.3.4 describes the approach for verification sampling and analysis to confirm that decontamination and/or removal activities have attained the risk-based limit standard. Section 11.4.0 describes the procedures to be followed in order to comply with closure certification requirements, to control run-on and runoff during closure, and to reuse equipment from the plant. Section 11.5.0 provides the estimated maximum mixed-waste inventory for each type of dangerous/mixed waste management unit. Section 11.6.0 describes how each of the four types of permitted units will be closed. The goal for closure of the WTP permitted DWMUs is clean closure, which is contingent on achievement of the clean

debris surface standard or verification that indicator constituents in decontamination solutions from the permitted DWMUs are not present in concentrations above risk-based limits.

Partial closure may be considered for some of the mixed waste management units; that is, one or more treatment processes or tank systems may be closed prior to the start of closure of the entire plant. Closure of a single mixed waste management unit or group of units could be necessary if a process were to be redesigned, eliminating the previous functions of the permitted DWMUs. Abnormal occurrences could also force partial closure, such as plugging of a tank or piping. Partial closures of the plant are not planned but could result from unforeseen circumstances. The closure plan will be revised to address the specific details for the permitted DWMUs if partial closure is necessary, and the revised plan will be submitted to Ecology for review, approval, and incorporation into the permit prior to start of closure activities.

The following assumptions were made in developing the closure plan:

- The maximum inventory will be present approximately nine months or more before the start of the closure period. This is the case because of the batch nature of the entire WTP treatment scheme. The treatment systems within the WTP will operate normally until the last portions of this final transfer are treated.
- The pretreatment building and the HLW melter will treat mixed waste and may be fully operational at the start of the closure period. These portions of the WTP will continue to operate during the closure period until the tank system flush solutions and residues are removed from each system to the maximum practical extent and treated before final decontamination begins.
- Operating records documenting the constituents and volumes of the mixed wastes in the storage and treatment areas, and of the mixed wastes previously processed through the facility, will be available. The operating record also will include detailed information on historical releases of dangerous/mixed wastes into secondary containment areas, previous decontamination work, and equipment that is present in secondary containment areas. This information will be directly relevant to final detailed planning of decontamination steps and procedures, especially treatment and disposal of the decontamination solutions and residues that will be generated.
- A release of dangerous/mixed wastes outside DWMU secondary containment areas will not occur.
- Equipment necessary for dangerous/mixed waste removal and equipment decontamination will be functional or will be repaired or replaced.
- Permitted TSD facilities will be available to receive dangerous and mixed wastes that will be generated during closure.

## Overall Closure Approach

After the final waste feed shipment or inventory is processed, the LAW LSM units will be closed and removed from the site. Tanks and piping will be flushed. The flush solutions will be treated in the pretreatment building by filtration and evaporation, and concentrated solids will be immobilized in glass produced in the HLW melter. Immobilized waste may or may not be acceptable at the facilities that accepted standard immobilized low-activity waste (ILAW) and immobilized high-level waste (IHLW) during the operating life of the WTP. Specific disposal plans for this type of waste may not be finalized until submittal of the final revised closure plan prior to start of closure.

The next step in the overall closure approach is to decontaminate the WTP mixed waste management units' components to the maximum feasible extent and remove components that cannot be decontaminated to meet the clean debris performance standards. Contaminated components will be disposed of in accordance with WAC 173-303-610(5).

Vitrification treatment will not be available after the last melter is shut down, near the completion of WTP deactivation work. Small quantities of feed waste or flushing residues may remain in tanks after the last melter is shut down, in addition to insoluble adhered coatings in piping and tanks. The remaining aqueous residues may have to be transferred to the LERF/ETF or the CWC for evaporation, precipitation, filtration, solidification, or other treatment.

## General Sequence of Closure Activities

The general sequence of activities necessary to close permitted DWMUs within the WTP, and the basis for establishing the order of performing these activities, is summarized in the following discussion:

**Dangerous/Mixed Waste Inventory Removal**

- Dangerous/mixed waste removal: The nonradioactive dangerous waste, if present, will be removed from the WTP to minimize the possibility of release. Note: dangerous wastes may be generated at the WTP throughout the closure period from maintenance activities.
- Inventory removal: The mixed waste inventory present in the WTP mixed waste management units at the beginning of the closure (primarily heels in the bottoms of tanks) will be removed and processed (pretreated and vitrified) to the maximum practical extent. This removal will minimize the possibility for release and allow decontamination of the equipment to proceed. Tank systems, miscellaneous units, and ancillary equipment will undergo flushing as part of closure activities.

**Decontamination**

- Liner inspection: After removal of mixed wastes (flushing), but before final decontamination of tanks and other permitted DWMUs begins, each secondary containment area will be inspected to identify potential or apparent breaks, cracks, or separation of the liner or protective coating from the concrete floors and walls. These locations (if any) will be mapped and documented, and sealed by welding or by application of patching or protective coating material, to prevent entry of contaminants during decontamination activities.
- Decontamination: Tank systems and other equipment in the DWMUs will be decontaminated. Additional chemical or physical extraction may be performed before tank systems, piping, or the equipment and equipment support structures in the DWMUs are removed. Extraction will be performed not only to meet clean debris standards detailed in Section 11.2.0, but also to minimize the amount of mixed waste constituents that could be readily available for migration or release during equipment removal.
- Equipment may be left in place as clean-closed if it can be successfully decontaminated.

**Inspection**

- Equipment inspection: Tank/miscellaneous units systems and ancillary equipment will be inspected to ensure that the clean debris surface standard and/or rinsate analyses risk-based limits are met. If necessary, the equipment will be identified as requiring removal, encapsulation, and disposal.

**Removal**

- Equipment removal: If the permitted equipment cannot be decontaminated to meet the closure performance standard, it will be removed, treated by encapsulation, and disposed at a permitted facility. Size reduction treatment may also be performed.
- Permitted equipment decontamination: After the last batch of waste feed has been fully processed through the WTP, the LAW LSMs will be shut down and removed. Pretreatment process vessels and lines will be flushed with water or other solutions. Flushing liquids will be determined prior to initiation of closure activities, and if a liquid other than water is identified for use, the closure plan will be revised and submitted for approval prior to initiating closure activities. Flushing

wastes will be treated in the pretreatment evaporation, cesium removal, and ultrafiltration processes. The concentrates will be transferred to a HLW melter. Water condensate will be routed to the LERF/ETF. One HLW melter may be operated after shutdown of the LAW LSMs to provide treatment for the solid flushing residues and evaporator concentrates. At the completion of treatment operations, the HLW melter will be shutdown by procedure for melter change out. The HLW failed melters will be disposed of in accordance with LDR requirements and to the degree necessary to meet disposal facility waste acceptance criteria (Section 11.3.3). LAW LSMs are not expected to require decontamination or size reduction treatment, other than surface decontamination after the operating equipment openings are closed. Spent HLW melters will be overpacked, and shipped to a permitted disposal facility.

**Structure Decontamination**

- Building structure decontamination, stainless steel-lined secondary containment areas: Liners in the DWMU secondary containment areas will be decontaminated using chemical or physical extraction technologies, or both. Most of the secondary containment areas in the mixed waste management units will be lined with stainless steel. Coated concrete floors in secondary containment areas will be decontaminated using only chemical extraction technologies, unless the protective coating is damaged or deteriorated. Damaged protective coating in secondary containment areas, and contaminated concrete under or behind liner breaches, will be decontaminated using physical extraction technologies. Decontamination solutions may be sampled to determine treatment requirements and transferred via existing pipelines to the LERF/ETF if they meet the LERF/ETF acceptance criteria or to another permitted Hanford TSD unit. Structure decontamination activities are described in Section 11.3.3.
- Building structure decontamination, concrete secondary containment areas: Examples of mixed waste management units that have coated concrete secondary containment without stainless steel include the condensate tank system, the LAW LSM gallery containment building, ILAW container finishing containment building, and several secondary waste container storage areas. At the time of closure, the facility operating record will be reviewed and each mixed waste management unit will be inspected to determine if releases of dangerous/mixed wastes have occurred in these areas. If a release of dangerous/mixed waste has occurred on a secondary containment concrete floor where the protective coating is even slightly damaged or deteriorated, the concrete in that secondary containment area will be physically extracted to remove at least 0.6 cm of concrete from the original surface. This effort will demonstrate compliance with the clean debris surface standard. If a release is not documented or suspected, minor or hairline cracks may still be accepted in determining that the clean debris surface standard is met. If the secondary containment protective coating is intact, the surface may be decontaminated by chemical extraction. If chemical extraction is unsuccessful, or if the coating is damaged by the chemical extraction, physical extraction will be performed.
- Building examination to verify decontamination: After each mixed waste management unit in each building has been decontaminated, the mixed waste management units will be inspected and closure documentation will be examined to verify that the clean closure standards have been met.

**Soil Investigation, Removal, and Verification**

- Potentially contaminated soil identification: Areas in which soil could have become contaminated will be mapped during the liner or concrete secondary containment area inspection and decontamination process. Soil sampling protocols will be established and implemented if potentially contaminated areas are identified.
- Soil decontamination: Soil removal will be performed if necessary. A revised closure plan and a post-closure plan per WAC 173-303-610(3) and WAC 173-303-610(7) will be submitted if removal to the established risk-based standards is not feasible.

- Soil sampling to verify decontamination for indicator constituents: The soil will be sampled and analyzed for indicator constituents after the contaminated soil has been removed.

**NOTE**: Sampling of soil to verify decontamination will be addressed per the SAP and is included as Appendix A of the Closure Plan.

**Disposition of Decontamination Wastes**

- Disposition of decontamination fluids: Wastewater or chemical extraction solutions from decontamination activities will enter an existing collection system for waste characterization and verification against LERF/ETF waste acceptance criteria. At the final stage of closure, when the transfer pipeline to the LERF/ETF is taken out of service, decontamination solutions may be containerized and transported to the LERF/ETF by truck. Characterization of the closure residues in the permitted DWMUs will be documented based on process knowledge or analysis of the mixed waste treated in the units. If the wastewater cannot be accepted by LERF/ETF, it may be solidified and transferred to the CWC or another available permitted unit.
- Disposition of the building air emission control equipment (i.e., HVAC): Building air emission control equipment will remain in place until decontamination of other WTP components meets the clean closure performance standards. The HVAC equipment will be decontaminated to meet the clean closure performance standard, or will be removed, designated, and packaged to meet the waste acceptance criteria of a permitted disposal facility.
- Disposition of decontamination equipment: Equipment or materials used in performing closure activities will be decontaminated or disposed of at a permitted disposal facility. Personal protective equipment will be disposed of as appropriate.

The general order of closure activities was selected to minimize the potential for release of mixed waste constituents by removing the bulk of the mixed waste constituents early in the closure process. This order of closure also minimizes waste generation by reducing the possibility that decontaminated areas will become contaminated again by ongoing closure efforts.

Detailed scheduling of closure activities depends on the necessary facility functions required to be maintained during the closure period and the degree of contamination in each permitted DWMU, especially after the mixed waste inventory is removed and decontamination activities start. The large number of tank systems increases the potential for a highly complex schedule. Similar tank systems and other types of permitted DWMUs may be grouped for the purpose of minimizing the bulk and complexity of plans for closure activities. The detailed decontamination operations schedule will be included in the revised closure plan to be submitted before the start of closure activities (see Section 11.7.0).

Work will be performed in a manner that minimizes worker exposure to dangerous and/or mixed waste or other workplace hazards and will meet the ALARA principles.

Additional detail will be provided describing waste removal, equipment decontamination, and closure-generated dangerous/mixed waste disposal activities in the revised closure plans to be submitted prior to start of closure.

### 11.3.1 Maximum Extent of Operations

The maximum extent of operations during the active life of the WTP corresponds to the maximum mixed waste inventory with full feed tanks, the melters operating at design capacity, and full storage areas.

The general arrangement drawings in Chapter 4 show the locations of tanks, melters, miscellaneous units, containment buildings, and container storage areas. The dimensions of the permitted dangerous/mixed waste management units are included in Chapter 4 tables.

### 11.3.2 Removing Dangerous/Mixed Waste

The mixed waste feed inventory present in the WTP after the final receipt of waste feed from the DST system unit will be processed before the start of the first phase of closure. The mixed waste will be removed from tank systems to the maximum practical extent. Removal will be continued by processing the last bulk volumes of waste feed through the applicable pretreatment and vitrification systems, and transferring treated ILAW and IHLW to other TSD units or facilities from the container and canister shipping docks. These activities will follow normal operating procedures.

The following description of mixed waste removal is intended to provide a brief overview of the WTP permitted DWMUs closure activities.

At the completion of mixed waste treatment operations, DOE and its contractor will close the permitted DWMUs and deactivate the WTP facilities. Deactivation, when completed, will leave the facilities in a safe, stable, and passive state that can be monitored with minimal cost and minimal requirements for service support from either personnel or active equipment.

The WTP deactivation operations will comprise a large portion of the RCRA closure activities of the permitted DWMUs that will occur between the start of the closure period, as defined in WAC 173-303-610(3)(c)(ii), and the final shutdown of the HLW vitrification system. Closure operations for some permitted DWMUs may begin before the completion of treatment of the final batch of waste feed from the DST system unit.

Overlaps between dangerous/mixed waste management unit closure and the WTP facilities' deactivation activities, and the overall TSD facility permitting process, as defined in the *Hanford Federal Facility Agreement and Consent Order* (Ecology, EPA and DOE 2011) and the implementing attachment known as the *Tri-Party Agreement Action Plan*, Section 6.3, are illustrated in Figure 11-6. The full extent of necessary interfaces, and detailed definition of the intermediate points in this timeline, will not be determined until deactivation and closure planning are finalized before the start of closure.

Vitrified waste in storage at the WTP at the start of the closure period will be shipped to disposal units on the Hanford Site or to other appropriate facilities. If the inventory of untreated waste feed cannot be treated at the WTP, it will be transferred to a permitted TSD facility. Circumstances under which the waste feed inventory would not be treated through vitrification are not accounted for in this closure plan and would require revision of the plan. Properly completed shipping papers and certifications, as applicable, will accompany waste shipments. Once the final batch of waste feed has been processed, residual heels will be flushed from the tank systems in accordance with deactivation procedures. Wastewater from flushing and decontamination solutions will be filtered, evaporated, and further treated as necessary in the WTP pretreatment building. The removed solids will be sent to the HLW melter. Wastewater will be sent to the LERF/ETF for treatment if acceptance criteria is met, or it will be transported to the CWC or another permitted TSD unit for storage, treatment, and disposal. Treatment in containers could be performed at the WTP if necessary or preferable, and if the resulting waste will meet the CWC or another TSD unit's waste acceptance criteria. The treatment in containers alternative is not likely to be used, due to the relatively large volumes of flush solutions that will be generated.

If non-radioactive waste is present as inventory at the start of the closure period at the dangerous/mixed waste container storage unit, it will be transferred to a permitted off-site facility for treatment or disposal. Non-radioactive dangerous waste generated during the closure or deactivation work will be managed similarly.

The TSD units available at the time of closure, and their waste acceptance criteria, may include additional units that are not available today.

Complete records will be kept as to the date of shipment, waste characterization, waste quantity, destination facility, land disposal restriction certifications and notifications, and other appropriate

information for removed dangerous/mixed waste. Specific documentation requirements are discussed in Chapter 3A. This information will be included in the closure documentation supporting certification, which is described in Section 11.4.1.

The specific types of off-site treatment and disposal units for dangerous wastes generated during closure will be determined and provided in the revised closure plan to be submitted before closure begins. Interfaces with the DST system unit and LERF/ETF will be specified in the revised plan to be submitted before the start of closure.

### 11.3.3 Decontaminating Structures, Equipment, and Soils

The only structures and equipment that may be contaminated at the start of the closure period are within the DWMU secondary containment areas. Some of the types of waste handling equipment that may be located in each permitted DWMU can be determined by review of the design drawings and operating plans. Examples include, but are not limited to, cranes, power manipulators, and welding machines. Many other types of hand tools, instruments, lights and cameras, radiation monitors, buckets, and other equipment may be present in one or more DWMU secondary containment areas. If contaminated with dangerous/mixed waste, these structures, tools, and equipment will be decontaminated, if feasible, using one or more of the following technologies to achieve the clean closure performance standard:

- Ultrahigh-pressure water jet
- Rotating cavitation water jet
- Soap scrubbing and wet vacuuming
- Steam vacuuming
- Vacuum abrasive blasting
- Soda blasting
- Shot blasting
- Ice blasting
- Hydroblasting
- Grit blasting
- Cryogenic $CO_2$ pellet blasting
- Sponge blasting
- Etching
- Rotating brushes/honing

More aggressive decontamination methods may be used on concrete if it becomes necessary to remove mixed waste accumulations that extend into the concrete:

- Needle scaler
- Paving breaker or chipping hammer
- Piston scabbler

These decontamination technologies were chosen based upon demonstrated effectiveness in a radioactive environment and the ability to successfully achieve the RCRA closure performance standard. These technologies are covered under the generic physical or chemical extraction technology categories listed in 40 CFR 268.45, Table 1. This approach is consistent with Ecology guidance (Ecology 2005) to achieve clean closure.

Specific methods of decontamination (and removal and disposal if required) of the permitted DWMU components and equipment will be determined at the time of closure. These methods will be based on

information in the operating record, including historical mixed waste releases, and DOE plans for future use of the buildings. The feasibility, or practicality, of decontamination depends on many factors that cannot be fully defined until the closure plan is finalized. Decision criteria may include, but are not limited to, radiation hazards, secondary mixed waste volumes, schedule and budget restrictions, and availability of TSD facilities to receive secondary mixed wastes. Equipment and debris that are not decontaminated will be disposed of as mixed waste.

Decontamination solutions from interiors of tanks, attached piping, and other equipment will be collected in tank drain piping and collection tanks. Decontamination solutions from tank and pipe exterior surfaces, and from decontamination of other free-standing ancillary equipment and secondary containment walls and floors in the four types of permitted DWMUs will be collected in secondary containment area sumps, then transferred by pumping or gravity drainage to plant wash collection tanks. Exceptions to this process may include decontamination of small surface areas where drainage may be captured in portable collection basins or buckets. Transfers of decontamination solutions to the LERF/ETF, CWC or another on-site TSD unit, or if the waste is not a dangerous mixed waste, to an off-site TSD facility, are addressed in Section 11.3.2.

The decontamination solutions and residues will be designated on the basis of process knowledge, or sampling and analysis if necessary, and transferred by existing hard piping to the LERF/ETF. The pipe connection to the LERF/ETF will be one of the last WTP components to be taken out of service, after decontamination activities are complete. The last few decontamination activities may require the collection of wastewater in a temporary sump and container, and will be transported by truck to the LERF/ETF.

Solid residues will be collected into containers by vacuuming or mechanical means (such as sweeping or shoveling), treated, if necessary, at the WTP, CWC, or Waste Receiving and Processing Facility to stabilize or solidify the residues, and disposed in the LLBG or a permitted disposal unit on the Hanford Site. Off-site mixed-waste landfill disposal facilities may be considered if an appropriate Hanford Site unit is not available.

Contaminated debris and solid decontamination residues removed from the WTP will be designated and packaged to meet the waste acceptance criteria of the receiving facility. Sampling of equipment and solid residues that are known to be contaminated and are intended for disposal is not necessary, if process knowledge is adequate to accurately designate the waste with the proper dangerous waste identification codes. Process knowledge includes the operating record, which should provide adequate waste analyses and waste processing histories for each permitted DWMU in the WTP.

Information to support disposal of melters and other debris will be provided in a revised closure plan to be submitted before the start of closure.

#### 11.3.3.1 Secondary Containment Structures and Associated Equipment

Within most of the process areas, stainless steel liners supported by steel reinforced concrete structures provide secondary containment for the process tanks, miscellaneous units, HLW melters, LAW melters, and ancillary equipment. Coated concrete surfaces (the walls and ceilings above the liners) in lined mixed waste management areas are not part of the required dangerous waste secondary containment structure, although additional controls may be provided for splashes and airborne contamination. Concrete in stainless-steel lined permitted secondary containment areas, where control of splashes, washdown sprays, or airborne contamination is necessary, will be coated during construction with a durable chemical-resistant impermeable protective coating. Top edges of the liner plates in these secondary containment areas will be sealed to the concrete surface.

Steel liners and coated concrete surfaces will be inspected visually. The visual inspection may be conducted remotely using CCTV. The purpose of the inspections will be twofold: to identify and map

cracks that might provide a migration pathway for contaminants and to identify areas that are potentially contaminated with mixed waste or waste residues.

Identified cracks in secondary containment areas will be sealed to prevent infiltration of decontamination solutions between the stainless steel liner and the concrete, or migration into cracks in concrete. Coated concrete and liner surfaces will be decontaminated to achieve the clean debris surface standard using chemical extraction, or if necessary, through physical extraction as described in Section 11.2.0.

Secondary containment areas with concrete surfaces are eligible for decontamination by chemical extraction only if the protective coating is intact. Minor cracking in the protective coating will not disqualify the concrete surface from being eligible for classification as a clean debris surface, if that surface has not been directly exposed to dangerous waste as a result of a container leak or some other release mechanism. The facility operating record will be consulted before decontamination work begins to identify those permitted DWMUs where leaks or other dangerous/mixed waste releases have occurred. These permitted secondary containment areas will also be visually inspected to determine whether the protective coating is intact, and whether undocumented evidence of a mixed waste release is present.

Secondary containment areas with intact protective coatings may be decontaminated with water washing if necessary. If additional decontamination is necessary, other technologies will be used, such as chemical decontamination solutions, ultrahigh-pressure water technologies, impact technologies such as sand blasting and $CO_2$ blasting, or other new technologies that may be developed prior to closure. Physical extraction methods that remove up to 0.6 cm of concrete will be necessary on concrete surfaces where the protective coating has peeled, bubbled, or is broken (before or after decontamination), exposing bare concrete. Stainless-steel liners may also require physical extraction treatment to remove mixed waste residues or corrosion. Inspections of the concrete and liner surfaces for a clean debris surface will be documented in an inspection record. Details of the decontamination methods to be used will be developed and submitted for approval prior to initiating closure activities.

Concrete and steel grinding, scaling, or scabbling residues will be collected, placed in containers, and sampled and analyzed for indicator constituents (COCs). The residues will be designated based on knowledge of the process or the waste that contaminated the concrete or steel.

The operating record will be reviewed prior to closure to determine if decontamination procedures should be performed in any areas outside the permitted unit secondary containment areas. These areas may include equipment decontamination bays or secondary containment sumps in transfer tunnels, or other locations where mixed wastes may have been generated or transferred during the operating life of the WTP and accidentally released. A final revised closure plan that includes areas identified as a result of the operating record review will be submitted to Ecology for review and approval before closure starts. Floors and walls in non-permitted areas of the building (such as offices, lunch rooms, or bulk storage areas for non-hazardous materials) that do not have documented releases of dangerous or mixed waste are not included in this closure plan.

#### 11.3.3.2 Building Air Emission Control Equipment

Building air emission control (i.e., heating, ventilation, and air conditioning, HVAC) equipment will remain in place and in operation as necessary to facilitate deactivation and decontamination of the WTP. HVAC equipment will be taken out of service in stages as radiological contamination is progressively removed or reduced. Compliance with applicable air emission standards and permits will be maintained. Air permits for operations will be evaluated to determine if they will support closure activities. The permits will be modified if necessary.

After completion of decontamination operations that may generate fumes, vapors, or dust that will be controlled by the building ventilation system, the HVAC equipment will be decontaminated, then dismantled, and reduced in size to the extent necessary to facilitate preparation for disposal. DOE may determine that the HVAC equipment will remain in place after closure.

Modifications to air emission standards or other appropriate standards to prevent or minimize the release of dangerous waste or dangerous waste constituents to the air or surrounding environment during closure will be specified in the revised closure plan to be submitted before the start of closure.

#### 11.3.3.3 Soil

Discovery of an apparent or potential breach in a cell liner or in the protective coating in unlined permitted secondary containment areas, on an exterior wall, or bottom floor adjacent to soil will require further investigation. The presence of soil contamination will be a unit-specific determination based on WTP records and direct visual or CCTV inspection of the stainless-steel liners and concrete surfaces as described in Section 11.2.0. The liner will be removed to allow access for additional investigation and decontamination if this inspection reveals areas of poor liner integrity such as severe corrosion, weld breaks, or other damage to the steel. Coring and soil sampling will be performed if a liner breach or damaged protective coating is found on a wall or floor adjacent to external soil and if the concrete has lost integrity at that location. If the concrete is not cracked, deteriorated, or porous, and a clean debris surface can be obtained by physical extraction treatment, no further investigation or soil removal may be necessary. If soil is sampled, it will be analyzed for indicator constituents of concern identified on the basis of the mixed wastes contained in that permitted DWMU during the operating life of the plant.

If soil having levels of contamination that exceed the risk-based soil cleanup levels is found, it will be removed and managed as media containing dangerous waste, and will be designated and disposed of accordingly at a permitted disposal facility. Soil at the limits of excavation will be sampled and analyzed after removals are completed to confirm that the concentrations of dangerous waste constituents are below the risk-based exposure limits. The appropriate risk-based cleanup standard will be consistent with the future land-use classification from the *Final Hanford Comprehensive Land-Use Plan Environmental Impact Statement* (DOE 1999). Risk assessment principles will be used to establish clean closure concentration limits for soils in accordance with WAC 173-303-610(2)(b)(i).

### 11.3.4 Sampling and Analysis to Identify Extent of Decontamination/Removal and to Verify Achievement of Closure Performance Standard

If there are stainless-steel lined secondary containment breaches or concrete that has lost integrity, efforts to define the extent of contamination will use a graded approach using field screening and survey followed by verification sampling if needed. This section is an outline for a SAP that describes the approach that will be followed for verification sampling. The SAP will also assist in confirming that decontamination and/or removal activities have attained the closure performance standard. Sampling may be employed where the clean debris surface standard cannot be met, such as interior tank and pipe surfaces, or where evidence is found indicating apparent failure of DWMU secondary containment such as liner cracks.

However, the SAP cannot be finalized at this time because the dangerous waste COCs at each permitted dangerous/mixed waste management unit and restrictions on sampling and analysis activities due to high radiation levels are not adequately defined. Prior to closure, this closure plan will be revised to specify sampling and analysis techniques in a site-specific SAP that may include: sampling to determine the closure performance standards are met, specify extent of dangerous/mixed waste contamination, sampling objectives, analytical parameters, sampling methods and locations, identification of sampling preservation, sampling and data quality control, the evaluation and reporting of data, and the chain-of-custody record.

Additional information, as follows, may be provided in the revised closure plan to be submitted prior to closure:

- Health and safety plan
- Details on sampling equipment

- COC indicator parameters for decontamination solution analyses
- Analytical methods that deviate from *Test Methods for Evaluating Solid Waste, Physical Chemical Methods* (EPA 1986), if any

#### 11.3.4.1 Sampling to Confirm Decontamination of Structures and Soil

Sampling of decontamination solutions may be conducted for equipment, structures, and debris that do not meet the clean debris surface standard following the decontamination process. This sampling will serve to define the extent of remaining contamination or confirm adequate decontamination of equipment, structures, or debris. The sampling process will be repeated after each subsequent round of decontamination effort until the decontamination effort is either determined to be successful, or is terminated, and the contaminated component is removed and disposed of as dangerous or mixed waste.

Soil found to be contaminated will be removed as part of the closure activities, and sampling will be performed to confirm that levels of contamination in the remaining soil do not exceed Ecology-approved risk-based soil cleanup levels. The Sampling and Analysis Plan for WTP is referenced in Appendix A.

## 11.4 Other Activities

This section describes the procedures to be followed in order to comply with closure certification requirements, to control run-on and runoff during closure, and to reuse equipment from the plant.

### 11.4.1 Certification of Closure

WAC 173-303-610(6) requires that within 60 days of completion of closure activities of the permitted dangerous/mixed waste management units, a closure certification will be submitted to Ecology. Following completion of closure, DOE (or the DOE-selected contractor) and an Independent Qualified Registered Professional Engineer will submit certifications that the permitted DWMUs have been closed in accordance with the approved closure plan. The certifications will be submitted in accordance with the Hanford Facility Dangerous Waste Permit (Ecology 2009) Condition I.I.1 to the following address:

Program Manager, Nuclear Waste Program
Washington State Department of Ecology
3100 Port of Benton Boulevard
Richland, Washington 99354

The following documentation will be prepared to support the closure certification, and will be provided or accessible to Ecology on request:

- Field notes related to closure activities
- A description of deviations from the approved closure plan and justifications for these deviations
- Documentation of the final disposition of dangerous wastes and dangerous waste residues, including contaminated media, debris, and treatment residuals
- Laboratory and field data (including quality assurance and quality control data) for samples and measurements, including those taken to determine background conditions or to determine or confirm clean closure
- A summary report that itemizes the data reviewed by the independent qualified registered professional engineer and tabulates the analytical results of samples taken to determine or confirm clean closure

A draft decontamination documentation checklist and an example of RCRA closure certification statement are provided in Figure 11-1 and Figure 11-5, respectively. Ecology will verify that the requirements for closure certification are properly completed per WAC 173-303-610(6).

### 11.4.2 Run-on and Runoff Control

No runoff or run-on resulting from precipitation or surface water flows is anticipated in the areas undergoing closure. The WTP permitted dangerous/mixed waste management units are enclosed within highly secure reinforced concrete and steel frame buildings, with the exceptions noted below. Wash water or other liquids resulting from decontamination activities will be contained by WTP containment structures - floors, walls, ceilings, sumps, and catch tanks.

The only permitted DWMUs that may be exposed to direct precipitation are the two process condensate vessels outside the pretreatment building. The failed melter storage building will be a separate freestanding unit, and run-on or runoff control will be assured for this unit before and during operation of the WTP, as well as during the closure period. There will be no changes in the secondary containment capacities or runoff control design for this unit during closure activities.

Activities such as groundwater monitoring and run-on and runoff control will be described in a revision to the closure plan prior to closure.

### 11.4.3 Equipment Reuse

Equipment may be decontaminated and reused during or after closure, if practicable. For example, contaminated (radiological) material and handling equipment such as shield doors, cranes, and power manipulators may be decontaminated in order to reduce radiation dose rates. This will allow initial or repeated personnel entry to areas where additional decontamination, debris size reduction, or packaging and encapsulation activities will be conducted. Equipment described in Sections 11.3.0 and 11.6.0 will be decontaminated using methods selected from those specified under 40 CFR 268.45, or equivalent technologies.

Criteria for determining whether equipment will be reused or disposed of include the following:

- Degree of contamination (radiological)
- The need to minimize potential worker radiation and dangerous/mixed waste exposures during decontamination; the amount of decontamination residues that would be generated
- The value of the equipment
- Compliance with the approved schedule and budget

Equipment that could be used by DOE in future operations at the WTP site, in other Hanford projects, or at different DOE facilities, may be decontaminated first.

## 11.5 Maximum Waste Inventory

The estimated maximum mixed waste inventory for each type of permitted DWMU is listed in Table 11-1. These are total storage capacity volumes from the WTP Part A.

The actual volumes present at the start of the closure period will be much less than values shown in the table. For example, the containment buildings and container storage areas may be empty or nearly empty on the date of completion of treatment of the final volume of waste feed, and the tank systems are not likely to contain more than a few percent of the maximum capacity.

## 11.6 Closure of Tanks, Container Storage, Containment Buildings, and Miscellaneous Units

This section of the closure plan identifies specific closure requirements for each type of permitted DWMU at the WTP, and describes the removal of wastes and equipment, decontamination of the unit, and disposition of decontamination residues. A summary of the closure standards and activities for each type of permitted DWMU is provided in Table 11-2. The performance standards and closure activities for many of the mixed waste management unit components are similar or identical for the four types of units, as indicated in the table. Differences in the detailed closure procedures will be due in part to variations in

permitted DWMU design, and different ancillary equipment present in various units, even in units of the same type. In the process cells/caves secondary containment areas for tanks or miscellaneous units, initial decontamination activities will be performed remotely, while the same types of activities may be performed by personnel in most of the other mixed waste management units, such as container storage units.

An overall estimate of the volume of closure wastes to be generated has not been prepared, due to the uncertainties regarding final disposition of the WTP equipment and structures. The estimate of the volume of closure wastes will be provided in an amended closure plan and submitted for approval prior to initiating closure activities. The volume of decontamination wastes that will be generated may be relatively large if most of the tanks, piping and related equipment, and major portions of the concrete and steel structures are removed and disposed of as waste. Volume of wastes may also be large if the same equipment and structures are completely decontaminated, resulting in large amounts of secondary residues, personnel protective equipment, and decontamination solutions. The volume of immobilized waste that will be generated during the closure period depends in part on the composition of the final batch of waste feed, which cannot be predicted at this time.

### 11.6.1 Closure of Tank Systems

Tank systems will be decontaminated using chemical and/or physical extraction technologies. Types of tank systems that will be decontaminated include, but are not limited to, the following:

- LAW and HLW feed and storage tank systems
- Evaporators and condensers
- Waste filtration tanks
- Ion exchange tanks
- PTF condensate tanks
- EMF tank systems

Types of ancillary equipment that may be decontaminated include, but are not limited to, the following:

- Waste transport, rinse, and washdown piping
- Pumps, agitators, wash rings, and ejectors
- Air, steam, and water lines in secondary containment areas
- Intra-facility pipelines

Decontamination of tank systems including tanks, piping, and other ancillary equipment will be conducted using chemical extraction technology and water washing and spraying. High-pressure steam or other physical extraction technologies identified in Section 11.3.3 will also be used to remove contamination if necessary. The decontamination procedures for closure of tanks will include, but may not be limited to, the following:

- Tank systems will be flushed after the final batch of bulk waste has been processed through that tank system. Large-volume flush solutions will remove as much waste as possible before smaller scale decontamination work begins. Flush water will be transferred to the pretreatment evaporation and ultrafiltration systems, and the concentrates will be sent to the HLW melter for vitrification, if the HLW vitrification system is operating. (If either or both vitrification systems will not be operating during the first phase of the closure period, this closure plan will be revised to account for changes in treatment and disposal of waste feed and flushing wastes, as necessary.) Water condensate from the evaporator will be routed to the LERF/ETF. The HLW melter will be shut down after flushing wastes are treated. Tank decontamination activities to be performed after completion of flushing may involve any of the chemical or physical extraction technologies

identified in Section 11.3.3. Used decontamination solutions will be transferred to the LERF/ETF or another permitted TSD facility.

- Physical evidence of mixed waste contamination in the secondary containment systems may be used, in addition to the operating record, to determine whether decontamination of the exterior of a tank system is needed. Before using decontamination solutions on the outside of a tank, the floor and wall liners will be inspected for cracks or other breaches. The cracks will be sealed before beginning decontamination treatment, or other engineered containment devices (such as collection basins) will be used to collect and contain solutions. The outer tank surface then will be cleaned with water or detergents, or other technologies as necessary, and rinsed. Decontamination of secondary containment for permitted DWMUs will be similar or identical to the procedures used for mixed waste container storage and containment building units.
- After the tanks are decontaminated, the tank interiors may be inspected using CCTV cameras to determine compliance with the clean debris surface standard. Because of possible radiation exposure, visual inspection of the process cells may be performed remotely using a camera with a zoom lens, or using another device that allows verification that the standard is met. Inspections will be documented in an inspection record.
- The outside of the tanks also will be inspected for compliance with the clean debris surface standard, and inspections will be documented in an inspection record.
- If tanks or ancillary equipment cannot be determined by visual inspection to meet the clean debris surface standard, the tanks may undergo further decontamination, or rinsate samples may be obtained to determine if the decontaminated tank meets the risk-based limit performance standard for clean closure. Before or after decontamination efforts, a tank system may be designated as mixed waste debris, removed, reduced in size, packaged, treated by encapsulation, and sent to a permitted disposal facility.
- Decontamination residues will be collected, designated, and transferred to a permitted disposal facility.

The decontamination procedures for piping and ancillary equipment will include, but will not be limited to, the following activities:

- The facility design and process information, in combination with operating records, will be used to identify the equipment associated with treatment of mixed waste. Piping that may have carried mixed waste or may have become externally contaminated with mixed or dangerous waste will undergo decontamination. Contaminated piping may include waste transfer piping, sump contents transfer piping, nitric acid transfer piping, and other piping associated with waste treatment and secondary waste transfer.
- The piping will undergo bulk flushing at the same time the tanks are flushed. Flushing of the pipes and other ancillary equipment will remove the waste in order to meet the clean debris surface standard. Chemical and/or physical extraction technologies may be used to attempt to remove the remaining waste from piping and other ancillary equipment. Where it is not possible to visually verify that the clean debris surface standard has been met, verification may be attempted by rinsate sampling, analysis, and comparison of analyses with risk-based limits.
- If it is not possible to meet the clean debris surface standard or risk-based limits, contaminated portions of the piping and ancillary equipment will be removed, designated as dangerous/mixed waste, packaged in waste containers, transferred to the CWC or another permitted unit, encapsulated, and disposed of at a permitted landfill disposal unit on the Hanford Site. Encapsulation may be performed at the CWC or elsewhere.

### 11.6.2 Closure of Container Storage Areas

Each permitted mixed waste container storage unit will be evaluated for historical spills or other releases of dangerous or mixed wastes by review of the facility operating records and by visual inspection. The visual inspections will determine if the container storage unit can be declared clean using the clean debris surface standard by checking for signs of any spills and/or releases of waste and loss of integrity, breaks, cracks, gaps, and other signs of deterioration of container storage area floors. If the record review and inspection support the conclusion that no releases of dangerous/mixed waste to the floor occurred, no further decontamination or sampling work will be required for that permitted mixed waste container storage unit. If either the inspection or record review indicate that dangerous/mixed waste releases to the floor of a mixed waste container storage occurred, decontamination will be required. If the protective coating is intact, physical extraction treatment will not be performed. If the coating is cracked or more severely damaged, physical extraction treatment will be required to remove at least 0.6 cm from the original surface. If the extent of the historical releases (the actual location on the floor) cannot be determined, the entire floor surface of the container storage area will be treated. If the resulting surface cannot be documented as a clean debris surface, the treatment may be repeated or the full thickness of the floor may be removed. The solid residues or rubble produced by treatment or removal will be disposed of as dangerous/mixed waste, unless sampling and analyses are performed to support a request for an Ecology determination that the rubble is not dangerous/mixed waste.

The presence of through-thickness cracks or other loss of integrity, if found in concrete floors that rest directly on soil, in secondary containment areas where dangerous/mixed waste releases are documented or suspected, may require a soil contamination investigation. Examples of adequate evidence that a release may have occurred include discoloration or staining of the concrete, odor, or elevated radiation readings observed during the initial closure inspection. Soil and possibly concrete samples will be obtained by coring in the vicinity of known or suspected mixed waste releases. Soil contaminated at concentrations above the risk-based soil cleanup levels will be removed, and confirmation samples will be taken at the limits of the excavation to confirm adequate removal. If analytical results are less than the Hanford soil background levels but greater than the risk-based soil cleanup concentrations, a request for approval of a clean closure-determination will be submitted to Ecology. The request will be supported with the analytical and other pertinent data for that mixed waste container storage unit.

If soil contamination is so extensive that the zone of contamination cannot be practically removed, or if groundwater contamination could result, the closure plan will be revised to provide for additional investigation and measures to address corrective action requirements. Decontamination documentation will be prepared as described in Sections 11.3.4 and 11.4.1.

### 11.6.3 Closure of Containment Building Units

One containment building unit, the pretreatment plant hot cell maintenance area containment building unit, will be used for secondary waste (mostly debris) decontamination, size reduction, and packaging operations throughout the operating life of the WTP. It may be used for these same functions during the closure period. The HLW melter (cave) containment building may be used for similar operations during closure, after the normal melter operations have been completed. In particular, the HLW melter containment building may be used to partially decontaminate and overpack failed HLW melters that were stored in the failed melter storage building (container storage area) during the operating life of the plant.

After completion of operations to facilitate closure of other permitted DWMUs, the melters and associated spent parts, feed apparatus, and off-gas control equipment will be removed. The containment buildings will be closed in the same manner, following the same inspection, decontamination, and documentation requirements identified in Sections 11.6.1 and 11.6.2 for tank system secondary containment areas and mixed waste container storage units. Several significant differences in design and mixed waste types may result in substantially longer time requirements for closure of the permitted containment building units, as compared to mixed waste container storage units. For example, most

operations in the HLW melter cave will be conducted with remotely operated equipment until the final decontamination stages are reached. Complex remote operations are necessarily slow, and the full extent of necessary decontamination, size reduction, and packaging work will not be known until the final stages of closure. The ILAW containment building units are also larger and contain more equipment than most of the mixed waste container storage units.

Other containment building units are more similar to mixed waste container storage units, including coated concrete rather than cladded floors and walls. These containment buildings will be closed in the same manner as the mixed waste container storage units (Section 11.6.2), with the added complications of various types of waste handling equipment such as power manipulators, cranes, and the LAW LSMs.

### 11.6.4 Closure of Miscellaneous Units

The HLW and LAW melters are miscellaneous units. Several times during the life of the WTP, spent melters will be removed from the HLW melter cave and LAW LSM gallery containment buildings. Removal and replacement of spent melters is not considered closure. One or more of the LAW melters may actually be removed and not replaced before the start of the closure period. The HLW melter is planned to be operating during the deactivation period (the first part of the closure period). If necessary, the HLW melter may be removed and replaced during the closure period to provide treatment for the residues from tank system flushing operations. Such removal and replacement would not be considered closure, although it may occur during the closure period.

LAW melter operating equipment openings will be closed and the exterior surfaces decontaminated. The melters will be removed from the LAW melter gallery as intact assemblies, encapsulated, if required, and shipped to the LLBG or another permitted treatment/disposal unit. Failed HLW melters may be stored during the closure period, while treatment, transport, and disposal operations are arranged. HLW melters may be partially decontaminated and packaged in an overpack in the HLW melter cave during the final phases of closure activities. HLW melters in the failed melter storage building (container storage area) may be returned to the HLW melter cave for partial decontamination and packaging. Both types of melters will be treated in accordance with the immobilization treatment standard and disposed of at permitted mixed waste disposal facilities.

Removal of melter components will be accomplished according to standard procedures for the operational period of the plant. Special HLW melter closure activities, such as size reduction, decontamination of components, or packaging of components and decontamination residues, may require the development of new procedures or the installation of new equipment.

Other miscellaneous units such as offgas scrubbers, condensers, precipitators, reboilers, oxidizers, and adsorbers will be closed in the same manner, following the same inspection, decontamination, and documentation requirements identified in Sections 11.6.1 and 11.6.2 for tank systems and container storage areas.

## 11.7 Schedule for Closure

For the purposes of this closure plan, the design life of the WTP is estimated at 40 years of operations. The estimated three-year schedule for closure is provided in Figure 11-7.

As required by WAC 173-303-610(3)(c), WTP will notify Ecology at least 45 days before the date on which the closure period is expected to start. In addition, WAC 173-303-610(3)(c) requires that the closure period begin no later than 30 days after the date on which WTP receives the final volume of dangerous waste. Due to the complexity of the WTP operations, the 30-day requirement to start closure activities will likely be unable to be met. Processing of the final batch of waste feed may require approximately nine months after receiving the final waste feed transfer from the DST system unit. Additional evaluation of the schedule will be conducted prior to closure.

The date of receipt of the final volume of bulk waste feed in the melters and various other specific individual permitted DWMUs within the WTP will be at the end of the processing of that final batch of waste feed. This date will roughly correspond to the date of the start of deactivation operations. The pretreatment and HLW feed preparation and melter systems may continue to operate for several months after the start of the closure period. These systems will be processing the tank system flush solutions and producing immobilized waste glass containing most of the residual waste constituents left in the tanks at the start of the closure period.

The year the WTP permitted DWMUs close will depend on the time required for the initial portion of the tank waste inventory to be processed, the degree of success in this mission, and whether the WTP will be used to continue to process the remaining Hanford tank waste inventory. Other factors that could affect the year of closure include changes in operational requirements, lifetime extension upgrades, a different operating contractor, and other unforeseen factors.

This estimated three-year closure schedule is necessarily general and is not meant to be definitive. For example, completion of decontamination of the pretreatment building and residue removal is shown at approximately 21 months after the start of the closure period. However, decontamination of the LAW, EMF and HLW vitrification plant tanks and other permitted DWMUs is expected to require use of pipelines through the pretreatment building to transfer decontamination solutions and rinsates to the LERF/ETF. Therefore, the final decontamination of piping and collection tanks in the pretreatment building may not be completed until after the LAW, EMF and HLW vitrification plant tanks and other permitted DWMUs are decontaminated.

A more specific schedule will be provided in the revision of this closure plan prior to the start of closure activities. The revised schedule will take advantage of final design and operating procedure information that is not available at this time. The schedule for closure will include a breakdown of activities to be performed after the date of completion of vitrification processing of the last batch of waste feed from the DST system.

## 11.8 Extension for Closure Time

The following discussion addresses the extension of the dangerous/mixed waste removal and closure time periods as specified in WAC 173-303-610(4)(a) and (b), respectively. The first citation requires that within 90 days after receiving the final volume of dangerous waste (the DST waste), the owner or operator will treat, remove from the dangerous/mixed waste management unit, or dispose of all dangerous wastes in accordance with the approved closure plan. The second requirement is that all closure activities will be completed within 180 days after receiving the final volume of dangerous waste.

The need for more than 90 days to remove dangerous/mixed wastes and more than 180 days to complete closure activities is anticipated. This need is due in part to the high radiation fields in many of the mixed waste management units, even after the entire bulk waste inventory has been processed and the residues (the inventory present at the start of the closure period) are removed by flushing. Processing of the final batch of waste feed may require approximately nine months of operation at or near design capacity of the plant, prior to the start of deactivation and closure work. As explained in Section 11.7.0, these processing operations will be completed, or nearly completed, at the start of the closure period.

The large number of mixed waste management units and extensive integrated ancillary equipment such as piping, valves, filters (mostly welded together), and the need to coordinate closure activities with other TSD units both at Hanford and offsite, means that more time will be required for closure than would be necessary for a typical dangerous waste management facility. The decontamination operations described in this closure plan are intended to avoid excessive secondary waste generation and to provide for the recycling of some pieces of equipment. The decontamination operations will include extensive use of chemical and physical decontamination treatment technologies. Incineration is not considered as an option for dangerous/mixed wastes to be generated during closure. Solidification, encapsulation, and

landfilling of dangerous and mixed wastes will be deliberately minimized. The volumes of wastes that will be disposed of will also be minimized to the extent practical by physical size reduction. Size reduction will allow packaging of large tanks, pipe, and support structures in relatively small, densely packed drums or waste boxes. These waste management priorities are emphasized to support this request for extension of the waste removal and closure periods, as suggested in Section 8.3 of the Ecology *Guidance for Clean Closure of Dangerous Waste Units and Facilities* (Ecology 2005).

The WTP operator will take the actions necessary to prevent threats to human health and the environment from the unclosed but not operating WTP, including compliance with applicable permit requirements. During the first several months of the closure period, a large portion of the plant will be operating to remove waste residues from the tank systems to the maximum practical extent. Flushing, vitrification, and other deactivation activities will require continued security and monitoring of the other non-operating portions of the plant, and no part of the plant will be unsecured or abandoned during the closure period.

If necessary, an extension of the three-year closure schedule will be requested and the need for the extension demonstrated in accordance with WAC 173-303-610(4)(a) and (b). The request would be determined prior to initiating closure activities, or during closure activities should closure conditions necessitate. A revised closure plan will be submitted for approval if an extension is necessary.

Condition II.R.1 Hanford Facility Dangerous Waste Permit (Ecology 2009) requires the Permittees to notify Ecology in writing, as soon as possible, of deviations or expected deviations from the schedules of the permit. The Permittees will include with the notification information supporting their claim that they have used best efforts to meet the required schedules. If Ecology determines that the Permittees have made best efforts to meet the schedules of the permit, Ecology will notify the Permittees in writing by certified mail that the Permittees have been granted an extension. Such an extension will not require a permit modification under Condition I.C.3. Should Ecology determine that the Permittees have not made best efforts to meet the schedules of the permit, Ecology may take such action as is deemed necessary. Copies of correspondence regarding schedule extensions will be kept in the operating record.

Condition II.R.1 Hanford Facility Dangerous Waste Permit (Ecology 2009) provides that any schedule extension granted through the approved change control process identified in the *Hanford Federal Facility Agreement and Consent Order* (Ecology, EPA, and DOE 1998) will be incorporated into the permit. Such a revision will not require a permit modification under Condition I.C.3.

**Table 11-1 Maximum Waste Inventory**

| Mixed Waste Management Unit | Maximum Inventory [a] |
|---|---|
| Total container storage | 1,089,000 gal |
| Total tank storage | 5,717,000 gal |

[a] Miscellaneous (e.g., melter and offgas equipment) and containment building units are not counted, as they will be processing the volumes previously stored in tanks, and producing treated and secondary wastes that are included in the container storage total.

**Table 11-2 Clean Closure Performance Standards and Activities[a]**

| Mixed Waste Management Unit Type | Components | Performance Standards | Closure Activities |
|---|---|---|---|
| Tank system | Exterior surfaces<br>Interior surfaces<br>Ancillary equipment<br>Secondary containment | Clean debris surface, risk-based limits, or removal | Extraction technologies or removal of tanks<br><br>Liner and concrete decontamination and/or removal |
| Container storage area | Floor, walls, and ancillary equipment | Clean debris surface, risk-based limits, or removal | Extraction technologies<br><br>Liner and concrete decontamination and/or removal |
| Containment building | Floor, walls, and ancillary equipment | Clean debris surface, risk-based limits, or removal | Extraction technologies<br><br>Liner and concrete decontamination and/or removal |
| Miscellaneous units (melter) | Melters and ancillary equipment | Removal | Removal |
| Miscellaneous units (others) | Exterior surfaces<br>Interior surfaces<br>Ancillary equipment<br>Secondary containment, as applicable | Clean debris surface, risk-based limits, or removal | Extraction technologies or removal of miscellaneous units<br><br>Liner and concrete decontamination and/or removal |

[a] Refers to WAC 173-303-610 and 40 CFR 268.45, Table 1, as incorporated by reference at WAC 173-303-140 (2)(a).

**DECONTAMINATION CHECKLIST**

This checklist is intended to document decontamination work and the attainment of a clean debris surface for the following components, structures, and materials.

1 Building or location:
2 Component or Area:
3 Material (such as concrete, metal):
4 Decontamination treatment method[1]:
5 Decontamination treatment parameters:
– Temperature
– Propellant
– Solid media (such as shot, grit, beads)
– Pressure
– Residence time
– Surfactants
– Detergents
– Grinding or striking media (such as wheels, piston heads)
– Depth of surface layer removal in cm (in concrete, for example)
– Other

The decontamination of the building, component, or material identified in steps 1 through 3 was completed as specified at steps 4 and 5.

| _____ | _____ / | _____ |
|---|---|---|
| Title | Signature | Date |

6 Performance Standard:

I have visually inspected the above-identified material before / after (circle one) decontamination or treatment in accordance with the closure plan. Dangerous waste residues have / have not (circle one) been removed to attain a clean debris surface[2].

| _____ | _____ / | _____ |
|---|---|---|
| Authorized Representative | Signature | Date |

Notes:

1 Decontamination treatment will use a chemical or physical extraction method as listed in Table 1, Alternative Treatment Standards for Hazardous Debris (40 CFR 268.45).
2 Clean debris surface as defined in Table 1, Alternative Treatment Standards for Hazardous Debris (40 CFR 268.45): "'Clean debris surface' means the surface, when viewed without magnification, will be free of all visible contaminated soil and hazardous waste except that residual staining from soil and waste consisting of light shadows, slight streaks, or minor discolorations, and soil and waste in cracks, crevices, and pits may be present provided that such staining and waste and soil in cracks, crevices, and pits will be limited to no more than 5 % of each square inch of surface area."

**Figure 11-1 Sample Clean Debris Surface Checklist**

This page intentionally left blank.

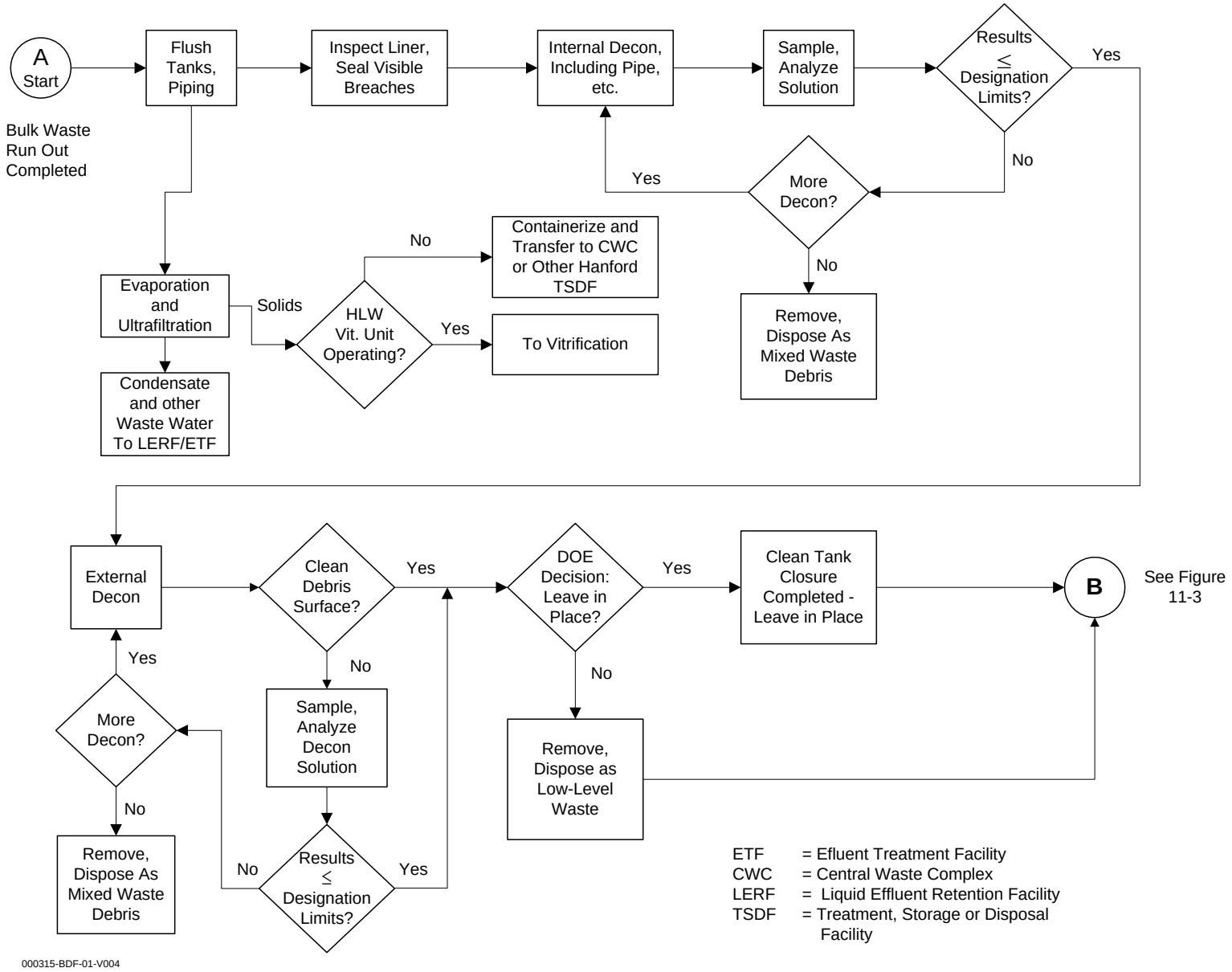


**Figure 11-2 Closure Strategy Flowchart for Tank Systems**

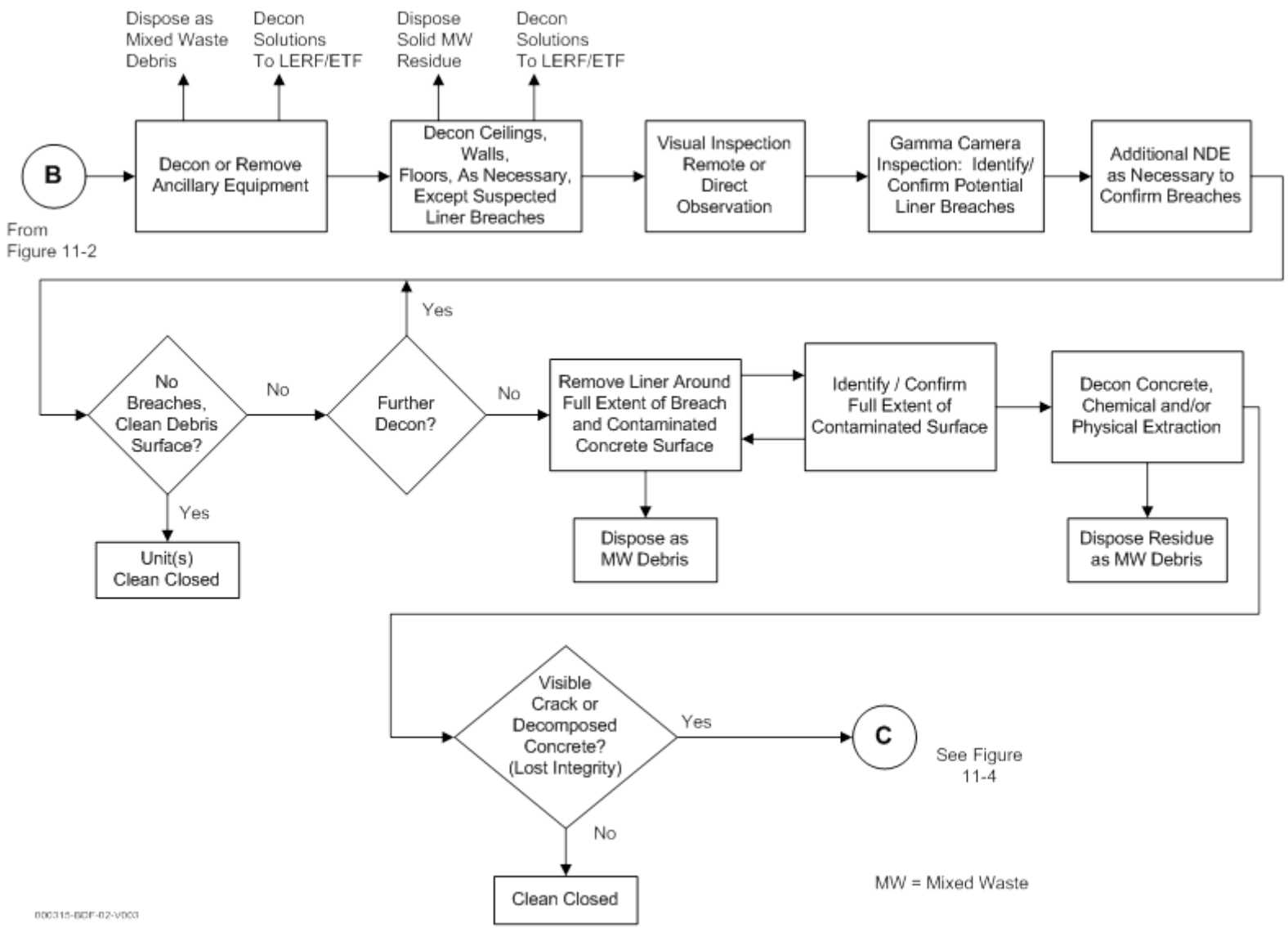


**Figure 11-3 Closure Strategy for Container Storage, Containment Building, Miscellaneous Unit, and Tank System Secondary Containment Areas**

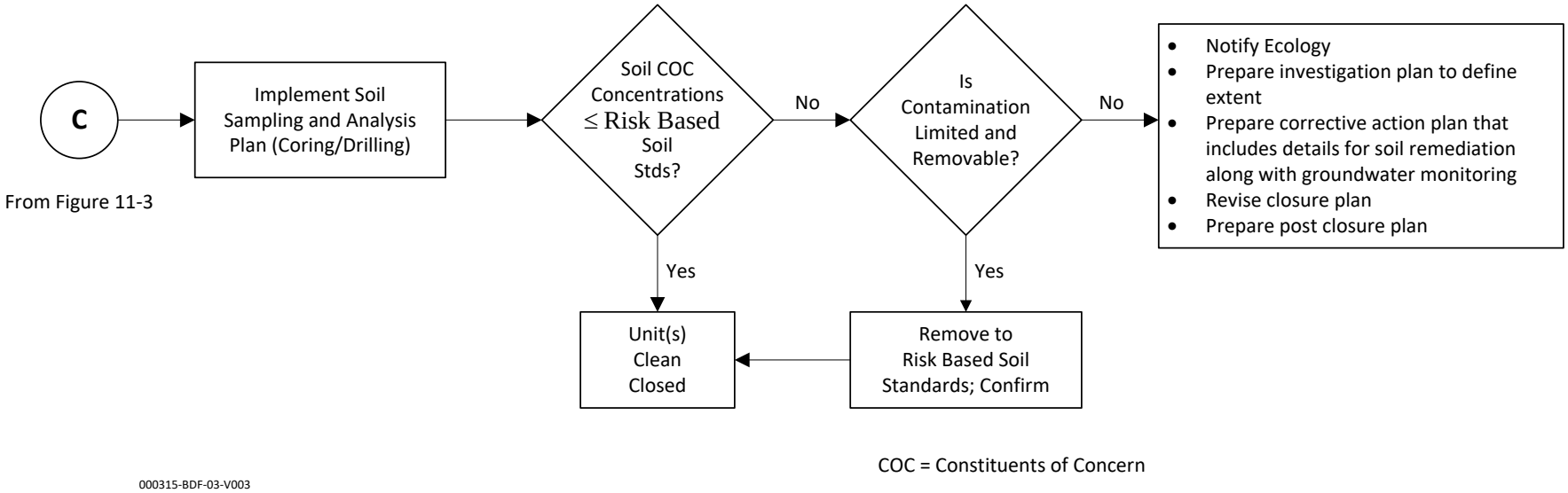


**Figure 11-4 Closure Strategy Flowchart for Soils and Groundwater**

This page intentionally left blank.

**RCRA CLOSURE CERTIFICATION**
**FOR**

**River Protection Project – Waste Treatment Plant**
**Hanford Site**
**US Department of Energy, Richland Operations Office**

We, the undersigned, hereby certify that _____ closure activities were performed in accordance with the specifications in the approved closure plan.

| | | |
|---|---|---|
| _____ | _____ / | _____ |
| Owner/Operator | Signature | Date |
| _____ | _____ / | _____ |
| Contractor Representative | Signature | Date |
| _____ | _____ / | _____ |
| Independent Registered Professional Engineer | Signature | Date |

Washington State PE # _____

**Figure 11-5 Example Closure Certification Statement**

This page intentionally left blank.

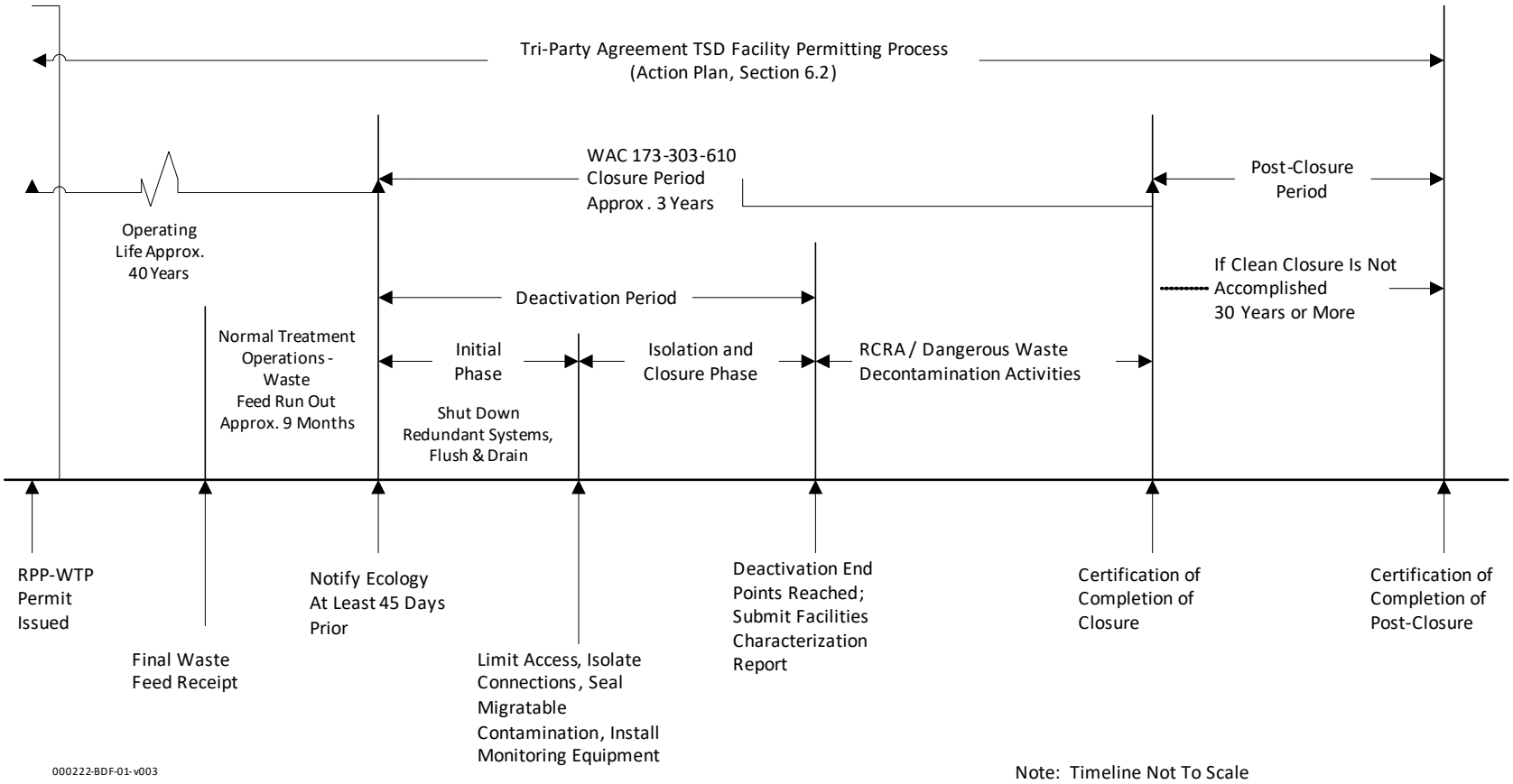


**Figure 11-6 WTP Permitting, Deactivation, and Closure**

This page intentionally left blank.

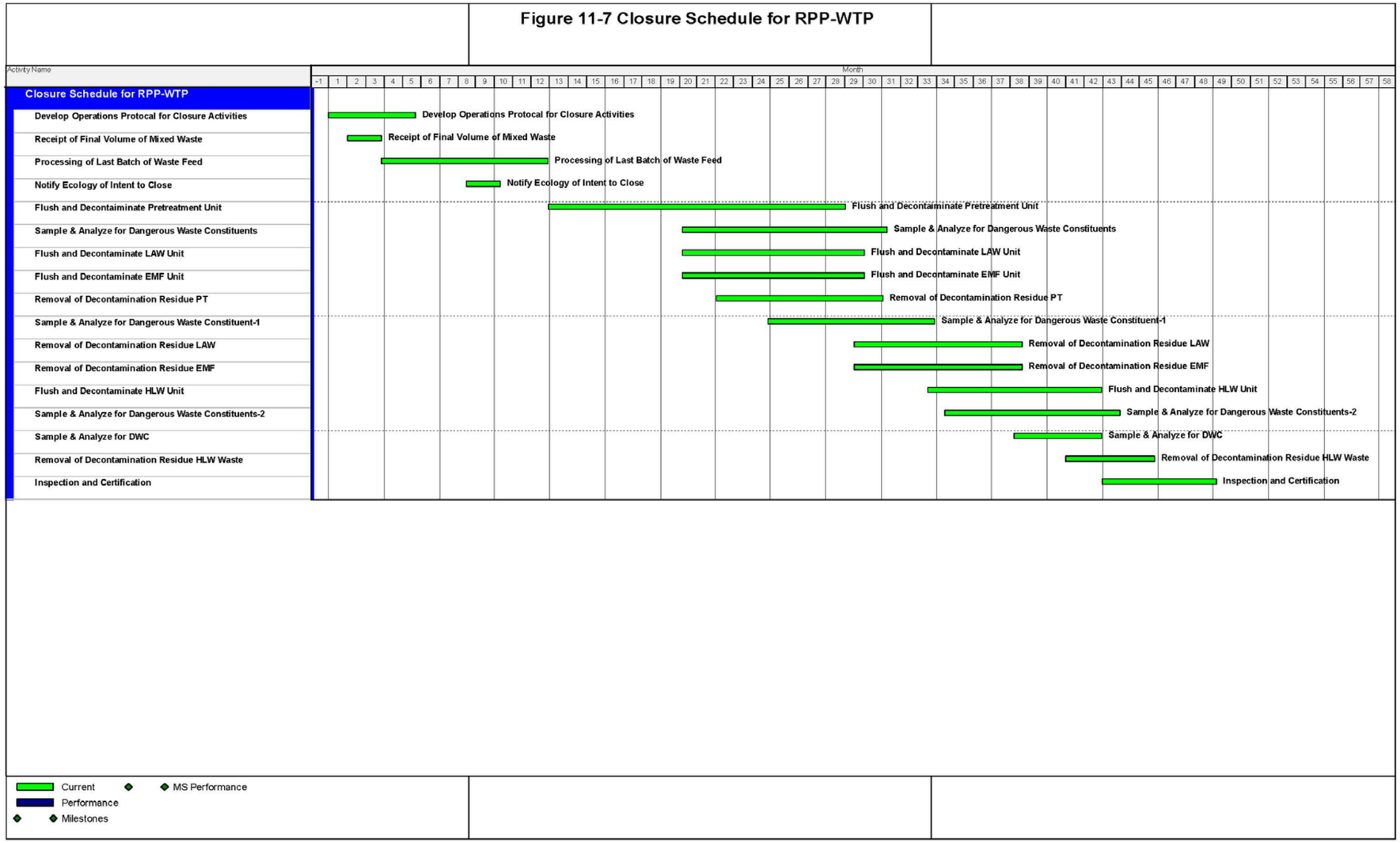


**Figure 11-7 Closure Schedule for WTP**

This page intentionally left blank.

# WASTE TREATMENT AND IMMOBILIZATION PLANT
# APPENDIX 1.4
# INTERIM COMPLIANCE SCHEDULE – WTP EFFLUENT MANAGEMENT FACILITY (EMF)

## CHANGE CONTROL LOG

Change Control Logs ensure that changes to this unit are performed in a methodical, controlled, coordinated, and transparent manner. Each unit addendum will have its own change control log with a modification history table. The "**Modification Number**" represents Ecology's method for tracking the different versions of the permit. This log will serve as an up to date record of modifications and version history of the unit.

Modification History Table

| Modification Date | Modification Number |
|---|---|
| 09/05/2017 | 8C.2017.6F |
| | |

This page intentionally left blank.

# Appendix 1.4
## Interim Compliance Schedule – WTP Effluent Management Facility (EMF)

| | EMF Compliance Schedule Submittal | Interim Compliance Date |
|---|---|---|
| | **III.10.C.2** | |
| EMF-1 | Submit documentation stating the EMF has been constructed in compliance with the Permit. | 12/31/2020 |
| | **III.10.C.3** | |
| EMF-3 | Update and submit for approval Waste Analysis Plan and associated Quality Assurance Project Plan (Chapter 3A and 3B) to Ecology for review and approval | 6/30/2020 |
| | **III.10.C.5** | |
| EMF-4 | Update and submit for approval Procedures to Prevent Hazards and Inspection Schedule (Chapter 6 and Appendix 6A) to Ecology for review and approval | 6/30/2020 |
| | **III.10.C.6** | |
| EMF-5 | Update and submit the Contingency Plan (Chapter 7) to Ecology for review and approval | 6/30/2020 |
| | **III.10.C.7** | |
| EMF-6 | Update and submit Training Program (Chapter 8) to Ecology for review and approval | 6/30/2020 |
| EMF-7 | Submit under separate cover the actual WTP Dangerous Waste Training Plan for incorporation into Administrative Record. | 6/30/2020 |
| | **III.10.C.8** | |
| EMF-8 | Update and submit the Closure Plan (Chapter 11) to Ecology for review and approval | 6/30/2020 |
| | **III.10.C.11** | |
| EMF-9 | Update and submit Risk Assessment Work Plan, revised in consultation with Ecology to address the DFLAW configuration | 6/30/2019 |
| | **CONTAINERS III.10.D.10** | |
| EMF-11 | Update and submit descriptions of container management practices (Appendix 4G) to Ecology for review and approval | 6/30/2020 |
| | **PRIOR TO INSTALLATION III.10.E.9** | |
| EMF-13 | Update and submit engineering information for each dangerous waste tank (Appendix 4G) to Ecology for review and approval | 4/30/2018 |
| EMF-14 | Update and submit engineering information for each tank system ancillary equipment (Appendix 4G) to Ecology for review and approval | 4/30/2018 |
| | **REPORT OF PROGRESS** | |
| EMF-45 | Update and submit descriptions of tank management practices (Appendix 4G) to Ecology for review and approval | 6/30/2020 |

| | EMF Compliance Schedule Submittal | Interim Compliance Date |
|---|---|---|
| | **EMF MISC. UNITS SYSTEMS III.10.M.A** | |
| EMF-16 | Submit engineering information for EMF Miscellaneous Treatment Unit Systems | 4/30/2018 |
| | **FINAL COMPLIANCE DATE** | |
| EMF-32 | Final Compliance Date (Hot Commissioning Complete) | 12/31/2023 |

# WASTE TREATMENT AND IMMOBILIZATION PLANT
# APPENDIX 2.0
# CRITICAL SYSTEMS FOR THE WTP

## CHANGE CONTROL LOG

Change Control Logs ensure that changes to this unit are performed in a methodical, controlled, coordinated, and transparent manner. Each unit addendum will have its own change control log with a modification history table. The "**Modification Number**" represents Ecology's method for tracking the different versions of the permit. This log will serve as an up to date record of modifications and version history of the unit.

Modification History Table

| Modification Date | Modification Number |
|---|---|
| 09/05/2017 | 8C.2017.6F |
| 03/2014 | |
| | |

This page intentionally left blank.

# OPERATING UNIT GROUP 10 – APPENDIX 2.0
# CRITICAL SYSTEMS FOR THE WTP

The documents listed in the following table are incorporated by reference into this permit and are subject to the requirements set forth in Part I Standard Conditions, Part II General Facility Conditions, and Part III Operating Unit Group 10 Conditions. Upon request, copies of the documents can be viewed at the Nuclear Waste Program Resource Center located at 3100 Port of Benton Blvd. Richland, WA. Appointments for viewing can be scheduled by calling (509) 372-7950.

| Mnemonic System Locator | System Name |
|---|---|
| **Pretreatment Systems** | |
| CNP | Cesium Nitric Acid Recovery Process System |
| CXP | Cesium Ion Exchange Process System |
| FEP | Waste Feed Evaporation Process System |
| FRP | Waste Feed Receipt Process System |
| HLP | HLW Lag Storage and Feed Blending Process System |
| PFH | Pretreatment Filter Cave Handling System |
| PIH | Pretreatment In-Cell Handling System |
| PJV | Pulse Jet Ventilation System |
| PVP | Pretreatment Vessel Vent Process System |
| PVV | Process Vessel Vent System |
| PWD | Plant Wash and Disposal System |
| RDP | Spent Resin and Dewatering Process System |
| RLD | Radioactive Liquid Waste Disposal System |
| TCP | Treated LAW Concentrate Storage Process System |
| TLP | Treated LAW Evaporation Process System |
| UFP | Ultrafiltration Process System |
| **Low-Activity Waste Systems** | |
| LCP | LAW Concentrate Receipt Process System |
| LEH | LAW Canister Export Handling System |
| LFH | LAW Container Finishing Handling System |
| LFP | LAW Melter Feed Process System |
| LMH | LAW Melter Handling System |
| LMP | LAW Melter Process System |
| LOP | LAW Primary Offgas Process System |
| LPH | LAW Container Pour Handling System |
| LSH | LAW Melter Equipment Support Handling System |
| LVP | LAW Secondary Offgas/Vessel Vent Process System |
| RLD | Radioactive Liquid Waste Disposal System |

| Mnemonic System Locator | System Name |
|---|---|
| **High-Level Waste Systems** | |
| HCP | HLW Concentrate Receipt Process System |
| HDH | HLW Canister Decontamination Handling System |
| HEH | HLW Canister Export Handling System |
| HFH | HLW Filter Cave Handling System |
| HFP | HLW Melter Feed Process System |
| HMH | HLW Melter Handling System |
| HMP | HLW Melter Process System |
| HOP | Melter Offgas Treatment Process System |
| HPH | HLW Canister Pour Handling System |
| HSH | HLW Melter Cave Support Handling System |
| PJV | Pulse-Jet Ventilation System |
| PVV | Process Vessel Vent System |
| RLD | Radioactive Liquid Waste Disposal System |
| **Analytical Laboratory Systems** | |
| RLD | Radioactive Liquid Waste Disposal System |
| **Balance of Facilities Systems** | |
| CPE | Cathodic Protection Electrical System |
| **Effluent Management Facilities Systems** | |
| DEP | Direct Feed LAW Effluent Management Process System |
| DVP | Direct Feed LAW Effluent Management Facility Vessel Vent System |
| RLD | LAW Vitrification Facility Radioactive Liquid Waste Disposal System |

# WASTE TREATMENT AND IMMOBILIZATION PLANT
# APPENDIX 7.0

## CHANGE CONTROL LOG

Change Control Logs ensure that changes to this unit are performed in a methodical, controlled, coordinated, and transparent manner. Each unit addendum will have its own change control log with a modification history table. The "**Modification Number**" represents Ecology's method for tracking the different versions of the permit. This log will serve as an up to date record of modifications and version history of the unit.

Modification History Table

| Appendices | Modification Date | Modification Number |
|---|---|---|
| Appendix 7.0 | 09/05/2017 | 8C.2017.6F |
| Appendix 7.1 | | |
| Appendix 7.2 | 07/06/2017 | 8C.2017.2F |
| Appendix 7.5 | 09/05/2017 | 8C.2017.6F |
| Appendix 7.7 | 09/05/2017 | 8C.2017.6F |
| Appendix 7.9 | 09/05/2017 | 8C.2017.6F |
| Appendix 7.11 | | |
| Appendix 7.12 | 07/06/2017 | 8C.2017.2F |
| Appendix 7.13 | | |
| Appendix 7.15 | 07/06/2017 | 8C.2017.2F |

This page intentionally left blank.

# OPERATING UNIT GROUP 10
# APPENDIX 7.0

This page intentionally left blank.

## OPERATING UNIT GROUP 10
## APPENDIX 7.0

Where information regarding treatment, management, and disposal of the radioactive source, byproduct material, and/or special nuclear components of mixed waste (as defined by the Atomic Energy Act of 1954, as amended) has been incorporated into this permit, it is not incorporated for the purpose of regulating the radiation hazards of such components under the authority of this permit and chapter 70.105 Revised Code of Washington (RCW). In the event of any conflict between Permit Condition III.10.A and any statement relating to the regulation of source, special nuclear, and byproduct material contained in portions of the permit application that are incorporated into this permit, Permit Condition III.10.A will prevail.

This page intentionally left blank.

## DRAWINGS AND DOCUMENTS
## OPERATING UNIT GROUP 10 – APPENDIX 7.5
## WTP DOCUMENTS APPLICABLE TO ALL AREAS
## CIVIL, STRUCTURAL, AND ARCHITECTURAL CRITERIA AND TYPICAL DESIGN DETAILS

The documents listed in the following table are incorporated by reference into this permit and are subject to the requirements set forth in Part I Standard Conditions, Part II General Facility Conditions, and Part III Operating Unit Group 10 Conditions. Upon request, copies of the documents can be viewed at the Nuclear Waste Program Resource Center located at 3100 Port of Benton Blvd., Richland, WA. Appointments for viewing can be scheduled by calling (509) 372-7950.

| Drawing/Document Number | Description |
|---|---|
| 24590-WTP-DC-PS-01-001, Rev 9 | Pipe Stress Design Criteria Including "Pipe Stress Criteria" and "Span Method Criteria" |
| 24590-WTP-PER-CSA-02-001, Rev 11 | Secondary Containment Design |
| 24590-WTP-PER-J-02-002, Rev 4 | Leak Detection in Secondary Containment Systems |
| 24590-WTP-PER-PS-02-001, Rev 6 | Ancillary Equipment Pipe Support Design |
| 24590-WTP-PER-M-16-002, Rev 0 | Underground Dangerous Waste Transfer Pipe Protection |
| RESERVED | RESERVED |

Source documents (which do not include a "P" in the last set of numbers, e.g. "-P0001," or "-TP001") should be used in conjunction with any document change notices issued against them.

We are currently transitioning from permit documents (which do include a "P" in the last set of numbers) to source documents. At the end of the transition period, permit submittals will contain source documents and will be incorporated into the permit as described in Ecology Publication #07-05-006.

This page intentionally left blank.

R11776033

ISSUED BY
RPP-WTP-PDC

Document title: **Secondary Containment Design**

Contract number: DE-AC27-01RV14136

Department: CSA

Author(s): Janine Smith Dan Robertson

Principal author signature: Originator By Janine Smith jesmith Org Name BNI WTP Placed Mar 29 2016 3:52 pm

APPROVED By Daniel C. Robertson at 6:57 am, Mar 30, 2016

Document number: 24590-WTP-PER-CSA-02-001, Rev 11

Checked by: David Taylor

Checker signature: Checked By David Taylor dataylo1 Org Name CSEA Placed Mar 30 2016 6:39 am

Reviewed by: Tim Kelly

Reviewer signature: T Kelly

Date of issue: 5-3-16

Issue status: Approved

Approved by: Luis Moreschi

Approver's position: CSA/EMF, Engineering Group Supervisor

Approver signature:

River Protection Project
Waste Treatment Plant
2435 Stevens Center Place
Richland, WA 99354
United States of America
Tel: 509 371 2000

# Notice

Please note that source, special nuclear, and byproduct materials, as defined in the Atomic Energy Act of 1954 (AEA), are regulated at the US Department of Energy (DOE) facilities exclusively by DOE acting pursuant to its AEA authority. DOE asserts, that pursuant to the AEA, it has sole and exclusive responsibility and authority to regulate source, special nuclear, and byproduct materials at DOE-owned nuclear facilities. Information contained herein on radionuclides is provided for process description purposes only.

# History Sheet

| Rev | Date | Reason for revision | Revised by |
|---|---|---|---|
| 0 | 6/24/02 | Initial issue | Indra Ghosh |
| 1 | 9/26/02 | Issued for Permitting Use | Indra Ghosh / N. T. Desai |
| 2 | 10/09/02 | • Revised text in Section 1<br>• Added Yard Transfer Lines structural support description.<br>• Changed material type from 304L to 316L on Fig. 4.<br>• Added Reference to "LAB" building in all sections | Indra Ghosh / N. T. Desai |
| 3 | 3/27/03 | • Revised Figures 1,2,3 and 4, and deleted Figure 5<br>• Replaced Ref. 2.1.5 with Washington Administrative Code<br>• Editorial changes in Section 3.1 as marked.<br>Issued for Permitting Use | Indra Ghosh / N. T. Desai |
| 4 | 2/12/04 | • Addition of AEA Statement<br>• Editorial changes in Section 3.2 as marked.<br>• Revise Figure 1 to reflect changes to LAW vessel skirt<br>• Deleted reference to the Lab in Figure 3<br>• Addition of Figure 5 describing the typical Laboratory vessel support details<br>• Addition of Figures 6 and 7 providing typical Laboratory under sink and fume hood drain secondary containment drip pan details<br>• Addition of Figure 8 describing typical Laboratory piping and pump pit sump weir details | Harsh Raval |
| 5 | 8/4/04 | Issued for Permitting Use | H. Raval, D. Robertson |
| 6 | 8/25/04 | Issued for Permitting Use | H. Raval, D. Robertson |

| Rev | Date | Reason for revision | Revised by |
|---|---|---|---|
| 7 | 5/19/05 | • Revised Section 3.1, Seismic Peak Ground Acceleration. Nathan Kyle<br>• Corrected specification callout on Figure 1<br>• Revised typical PT sump and typical wall/mat penetration details on Figure 4<br>• Revised Note 3 and revised details on Figure 7<br>• General revision to Figure 8 (Added Details 1 and 2)<br>• Revised Notes 3 and 4 for cupsink detail, and revised hot cell transfer port drain details on Figure 9. Added Note 5 for cupsink cover.<br>• Revised Note 3, added Note 4 to embed plate detail on Figure 10. Added adjacent embed plate optional detail.<br>• Added Figures 11 and 12.<br>Issued for Permitting Use | Nathan Kyle |
| 8 | 8/25/08 | • Revised Figures 8 and 11 to provide additional sketch notes for Laboratory weir plans and sections<br>• Addition of Figure 13 LAW Melter Encasement Assembly sketch<br>Issued for Permitting Use | Bryson Bogart |
| 9 | 2/8/10 | • Added Figures 14 through 16, revised Figure 13<br>Issued for Permitting Use | Bryson Bogart,<br>Dan Robertson |
| 10 | 10/18/11 | • Revised Figure 6 and 7, revised figure title blocks<br>Issued for Permitting Use | Bryson Bogart,<br>Dan Robertson |
| 11 | 2/16/16 | • Added Figures 17 through 22<br>• Revised sections 1 and 3 to include EMF related content<br>Issued for Permitting Use | Janine Smith,<br>Dan Robertson |

# Contents

Notice ..... ii
History Sheet ..... ii
1 Introduction ..... 1
2 Applicable Documents ..... 1
2.1 Codes and Standards ..... 1
3 Description ..... 2
3.1 Design Methodology, Material, Loads, and Load Combinations ..... 2
3.2 Typical Details ..... 3

# Figures

Figure 1 Typical Vessel Embed, Support, and Flat Bottom Tank Details for LAW 3 Building ..... 4
Figure 2 Liner Plate and Grillage Support Details for PT, HLW, LAW and LAB Buildings ..... 5
Figure 3 Typical Process Vessel Support Details for PT and HLW Buildings ..... 6
Figure 4 Misc. Typical Details Sumps, Trenches, Wall Penetrations, Embedded Plates and Special Protective Coating PT, HLW, LAW and LAB Buildings ..... 7
Figure 5 Typical Process Vessel Support Details for LAB Building ..... 8
Figure 6 Plan View of Typical Under Sink and Fume Hood Drain for LAB Bldg Secondary Containment Leak Collection Pan ..... 9
Figure 7 Section View of Typical Laboratory Under Sink and Fume Hood Drain for LAB Bldg Secondary Containment Leak Collection Pan, Including Leak Test Plug ..... 10
Figure 8 Typical Laboratory Piping and Pump Pit Sump and Weir Details for LAB Building ..... 11
Figure 9 Typical Hot Cell Floor Drain Detail and Transfer Port Drain Detail for LAB Building ..... 12
Figure 10 Typical HLW Building Sump Details & Typical PT Building SS Liner/CS Embed Detail ..... 13
Figure 11 Typical Laboratory C3 Piping and Pump Pit Sump and Weir Details for LAB Building ..... 14
Figure 12 Typical RLD Condensate Tank Support Details for PT Building (Exterior) ..... 15
Figure 13 LAW Melter Encasement Assembly Secondary Containment Details ..... 16
Figure 14 Typical Autosampling System ASX Sampler Full Half Section ..... 17

Figure 15 Typical Autosampling System Lower Containment Area Leak Detection Details ..... 18

Figure 16 HLW Building HOP Drum Transfer Tunnel Drip Pan Plan, Sections and Details ..... 19

Figure 17 Typical Details; Waterstops; EMF Buildings ..... 20

Figure 18 Typical Details; Liner Plate and Grillage Support Details; EMF Buildings ..... 21

Figure 19 Typical Details; Equipment Support and Ring Beam; EMF Buildings ..... 22

Figure 20 Typical Details; Sumps; EMF Buildings ..... 23

Figure 21 Typical Details; Wall Penetrations; EMF Buildings ..... 24

Figure 22 Typical Details; Embed Plate, Stanchion Support, Subchange Room Interface; EMF Buildings ..... 25

# 1 Introduction

In accordance with Chapter 173-303 Washington Administrative Code (Ref. 2.1.5), facilities that manage liquid dangerous waste must provide secondary containment[1]. At the Waste Treatment and Immobilization Plant, secondary containment systems have been designed to prevent a release of dangerous waste to the environment as required by the Code.

This report describes and provides references to the design criteria, load definitions, load combinations, material of construction, and methodology for the analysis/design of Pretreatment (PT), High-Level Waste (HLW), Low-Activity Waste (LAW) facilities, Effluent Management Facility (EMF), and Analytical Laboratory (LAB) building with emphasis on secondary containment components. It also includes several representative typical details.

# 2 Applicable Documents

## 2.1 Codes and Standards

2.1.1 ACI 349, Code Requirements for Nuclear Safety-Related Concrete Structures.

2.1.2 ACI 318, Code Requirements for Structural Concrete.

2.1.3 Uniform Building Code (UBC), 1997.

2.1.4 ANSI/AISC N690, Specification for the Design, Fabrication, and Erection of Steel Safety-Related Structures for Nuclear Facilities.

2.1.5 Washington Administrative Code, Chapter 173-303.

2.1.6 AISC M016-89, Manual of Steel Construction -Allowable Stress Design, Ninth Edition.

2.1.7 ASCE 7, Minimum Design Loads for Buildings and Other Structures.

2.1.8 ASCE 4, Seismic Analysis of Safety-Related Nuclear Structures and Commentary.

2.1.9 Safety Requirements Document, Volume II, 24590-WTP-SRD-ESH-01-001-02.

[1] With the exception of ancillary equipment as provided by 173-303-640(4)(f) and approved by DWP.

# 3 Description

## 3.1 Design Methodology, Material, Loads, and Load Combinations

| | |
|---|---|
| **Methodology** | Codes and specifications:<br>• PT and HLW:<br>General: ASCE 4 (Ref. 2.1.8).<br>Concrete: ACI 349 (Ref. 2.1.1).<br>Steel: ANSI/AISC N690 (Ref. 2.1.4) and AISC (Ref. 2.1.6).<br>• LAW, LAB and EMF:<br>General: UBC (Ref. 2.1.3).<br>Concrete: ACI 318 (Ref. 2.1.2).<br>Steel: AISC M016 (Ref. 2.1.6). |
| **Dead Loads and Live loads:** | ASCE 7 (Ref. 2.1.7), UBC (Ref. 2.1.3), and Tables 4-1, 4-2 and 4-3 of SRD (Ref. 2.1.9). |
| **Seismic Loads** | Site-specific response spectra as specified in SRD (Ref. 2.1.9).<br>• PT and HLW:<br>Peak Ground Horizontal Acceleration = 0.30g.<br>Peak Ground Vertical Acceleration = 0.21g.<br>• LAW, LAB and EMF: Seismic Zone 2B (UBC, Ref. 2.1.3).<br>Peak Ground Horizontal Acceleration = 0.24g. (Zero Period Acceleration)<br>Peak Ground Vertical Acceleration = 0.16g. (Zero Period Acceleration) |
| **Material** | |
| Concrete | 28-day compressive strength, f,' = 4,000 psi and 5,000 psi. |
| Reinforcing Bar | ASTM A706, deformed. |
| Steel | W Shape – ASTM A992 or A572 Grade 50; Angles and Channels - ASTM A36 or A529 Grade 50; Plates - ASTM A36; Pipe - ASTM A53; Anchor Rods - ASTM F1554; Welded studs A108; Steel deck-ASTM A653. |
| **Load Combinations** | |
| Concrete | • HLW and PT: Based on ACI 349 (Ref 2.1.1).<br>• LAW, LAB and EMF: ACI 318 (Ref. 2.1.2) and UBC (Ref 2.1.3). |
| Steel | • HLW and PT: Based on ANSI/AISC N690 (Ref 2.1.4) and AISC (Ref 2.1.6).<br>• LAW, LAB and EMF: AISC M016-89 (Ref. 2.1.6) and UBC (Ref 2.1.3). |
| **Stainless Steel Liners (SS)** | Most commonly used in the process cells. Refer to Figures 2-5 for typical details concerning PT, HLW, LAW & LAB and Figures 18 & 20 for EMF buildings. Refer to Figures 14 and 15 for ASX liner typical details. |
| **Special Protective Coating** | Material for coatings will be compatible with the dangerous waste. |
| **Yard Transfer Lines Structural Support** | Structural support for yard transfer lines (intra and inter facility waste transfer lines) is described in Ancillary Equipment Pipe Support Design, 24590-WTP-PER-PS-02-001. |

## 3.2 Typical Details

Figures 1 through 22 show several typical details related to secondary containment for PT, HLW, LAW, LAB and EMF buildings.

**Figure 1 Typical Vessel Embed, Support, and Flat Bottom Tank Details for LAW 3 Building**

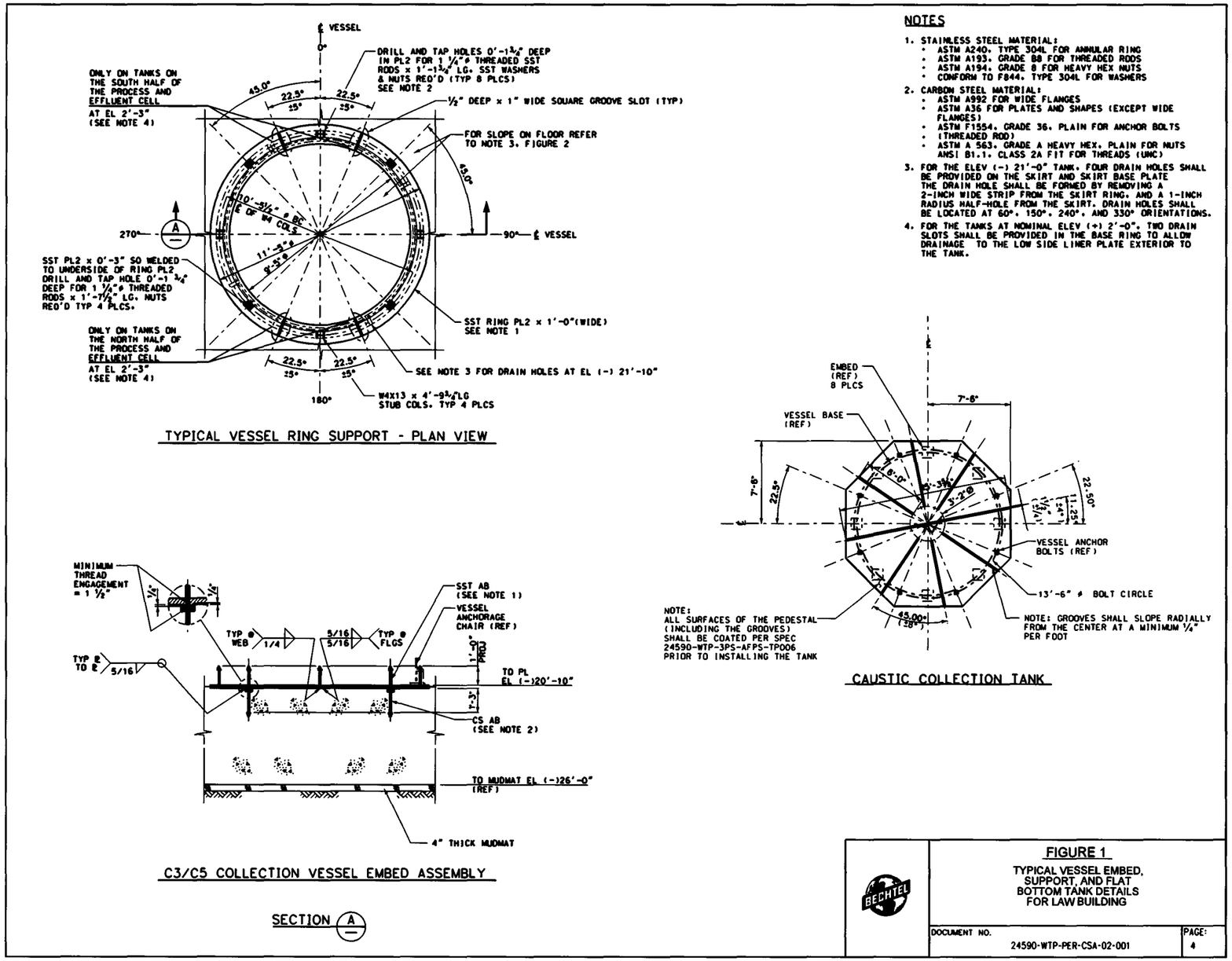

**Figure 2 Liner Plate and Grillage Support Details for PT, HLW, LAW and LAB Buildings**

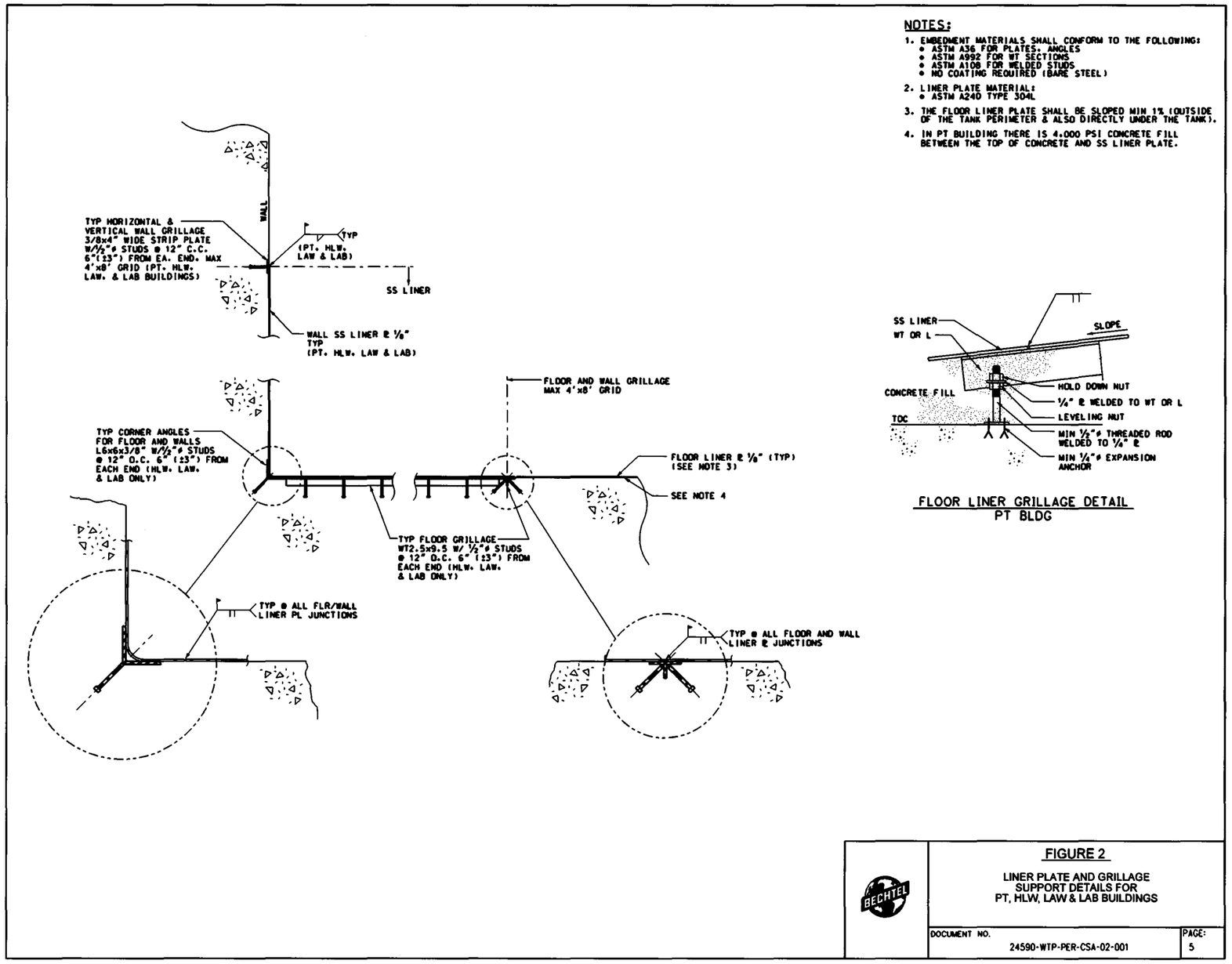

**Figure 3** **Typical Process Vessel Support Details for PT and HLW Buildings**

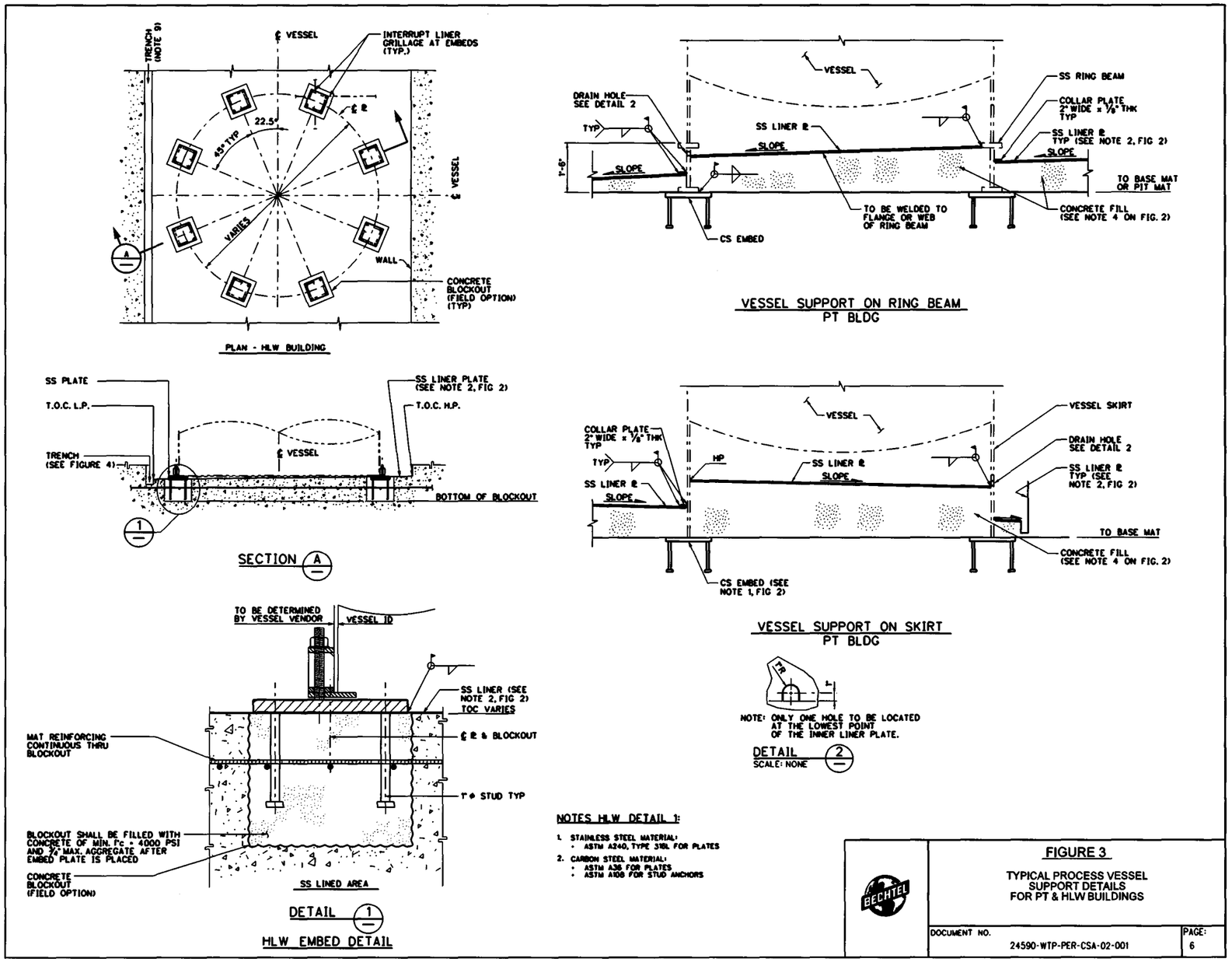

**Figure 4** Misc. Typical Details Sumps, Trenches, Wall Penetrations, Embedded Plates and Special Protective Coating PT, HLW, LAW and LAB Buildings

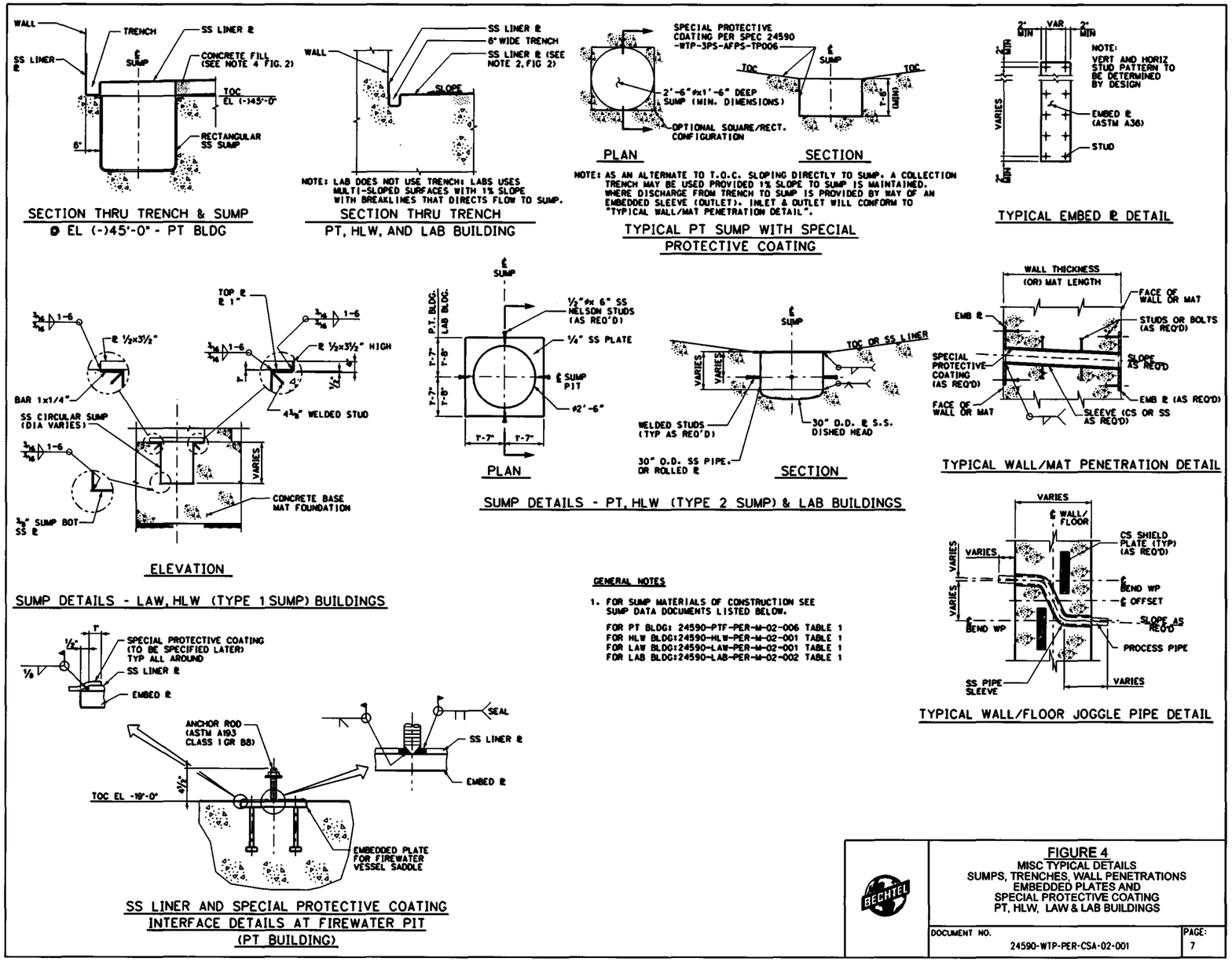

**Figure 5 Typical Process Vessel Support Details for LAB Building**

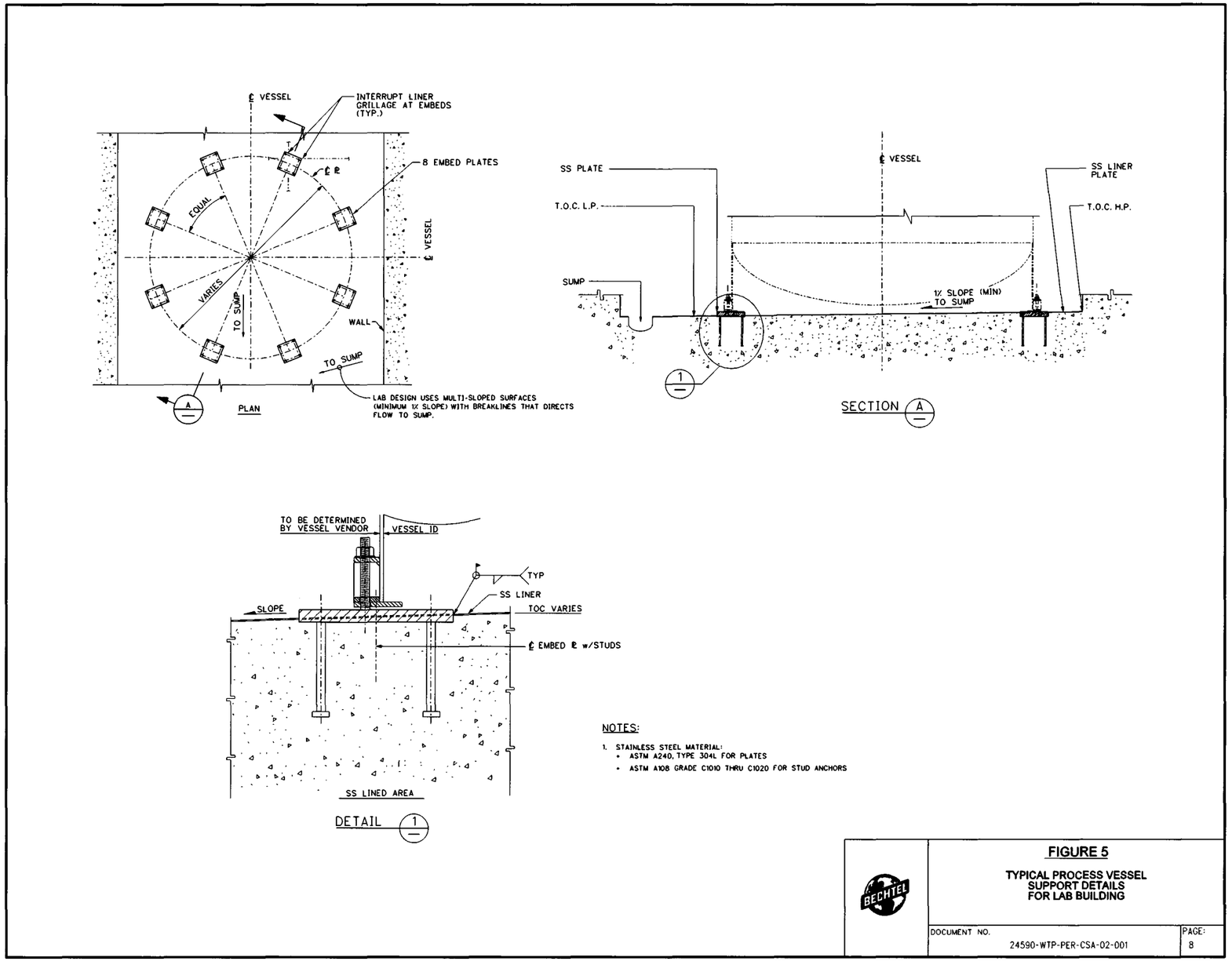

**Figure 6 Plan View of Typical Under Sink and Fume Hood Drain for LAB Bldg Secondary Containment Leak Collection Pan**

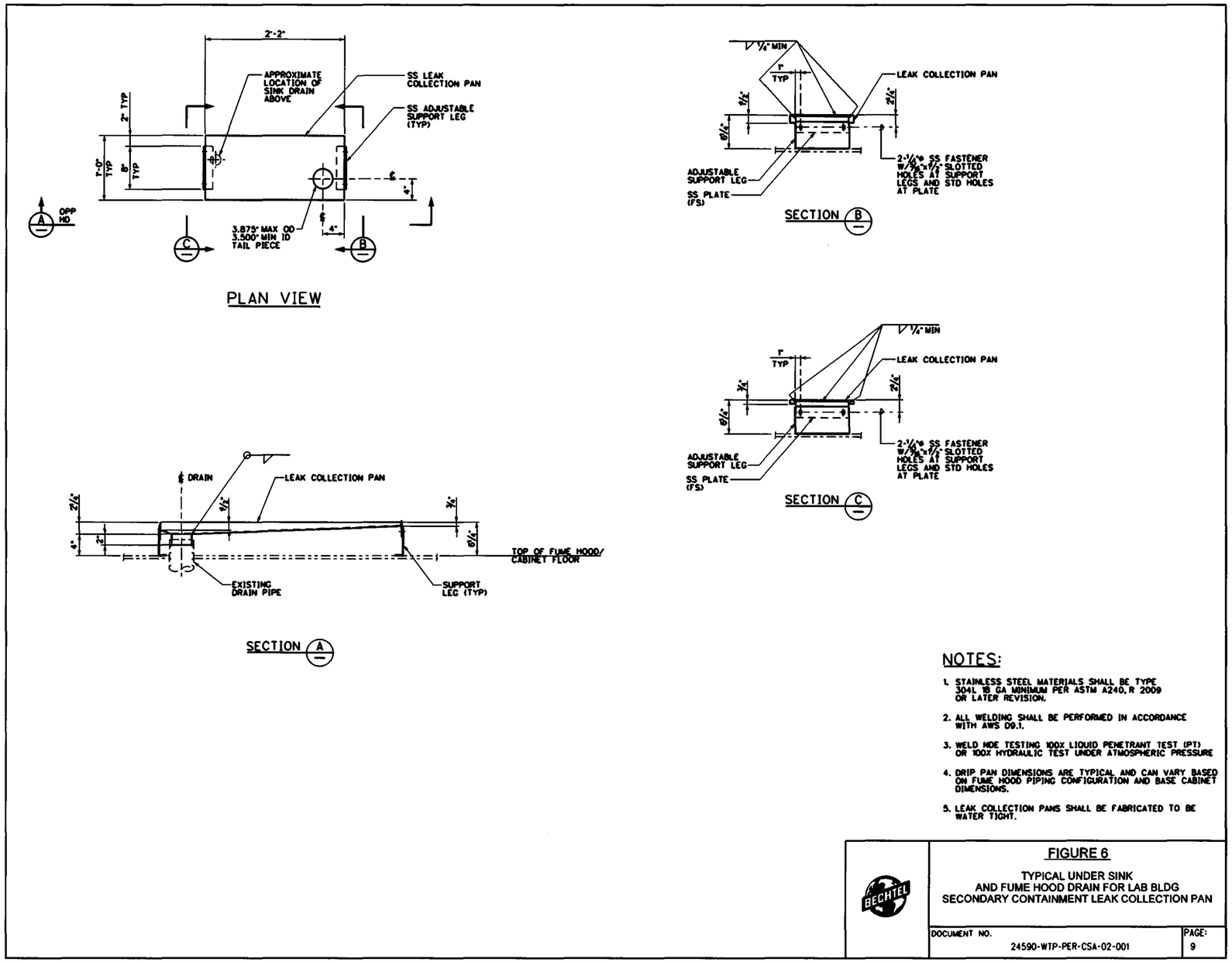

**Figure 7** Section View of Typical Laboratory Under Sink and Fume Hood Drain for LAB Bldg Secondary Containment Leak Collection Pan, Including Leak Test Plug

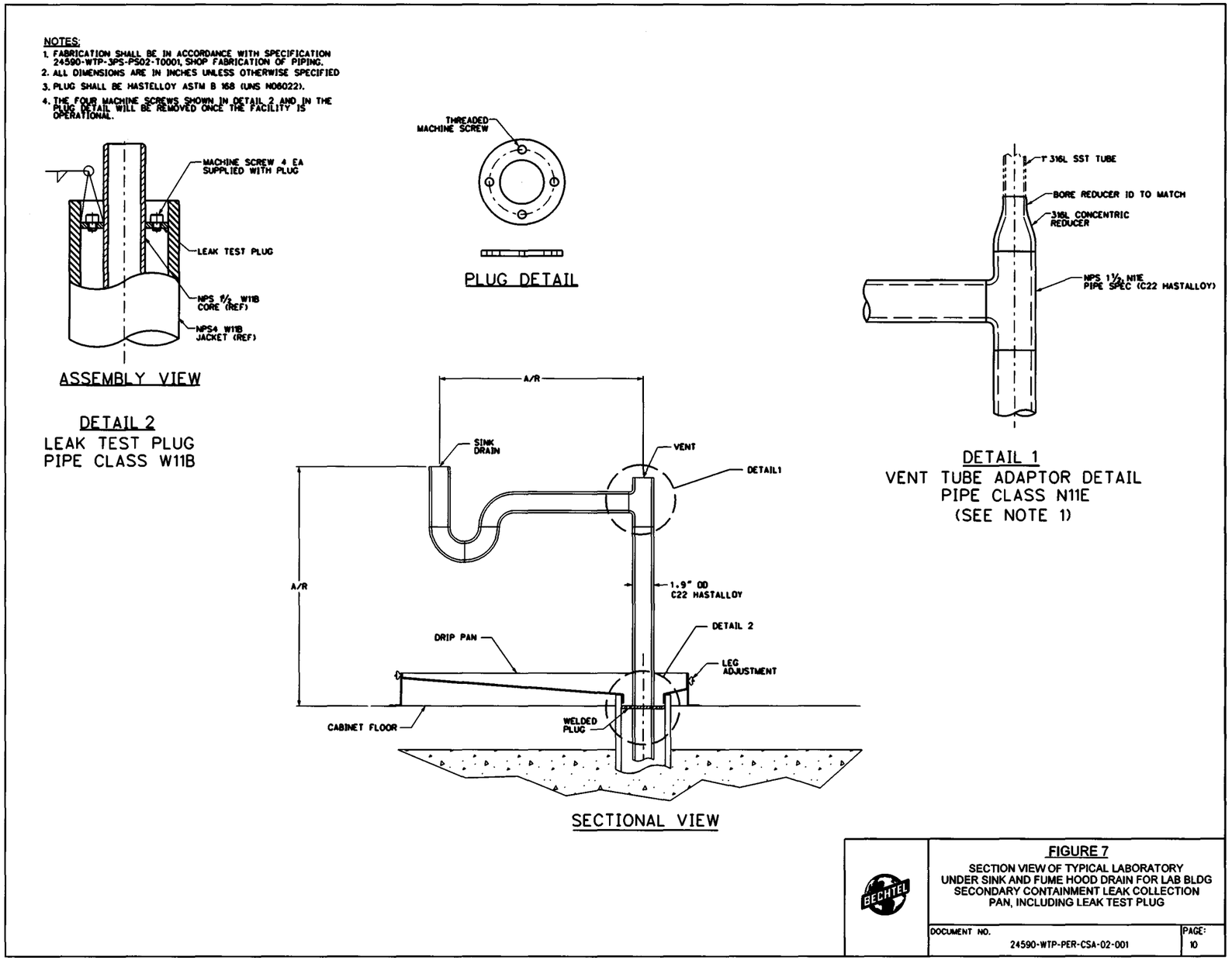

**Figure 8** **Typical Laboratory Piping and Pump Pit Sump and Weir Details for LAB Building**

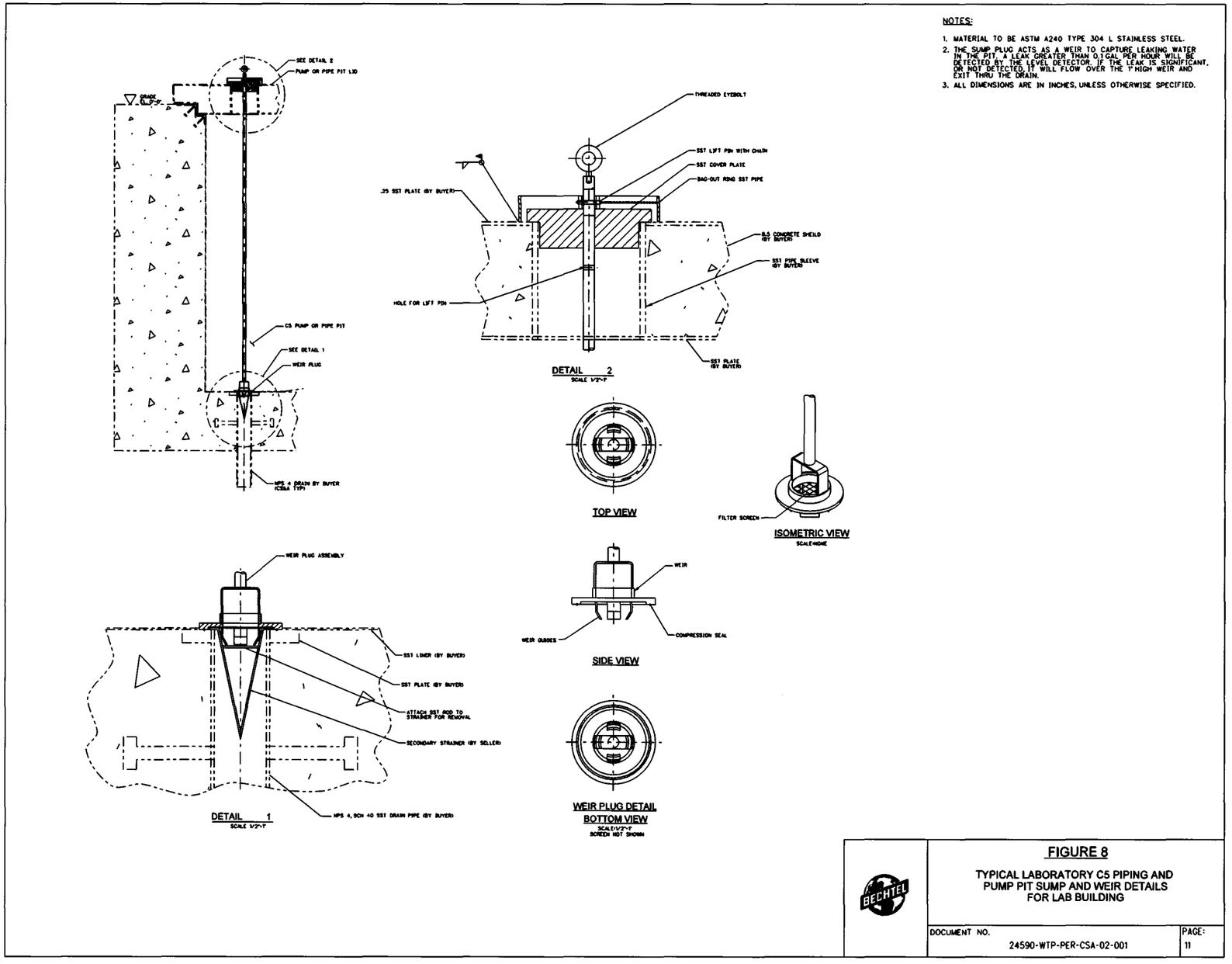

**Figure 9 Typical Hot Cell Floor Drain Detail and Transfer Port Drain Detail for LAB Building**

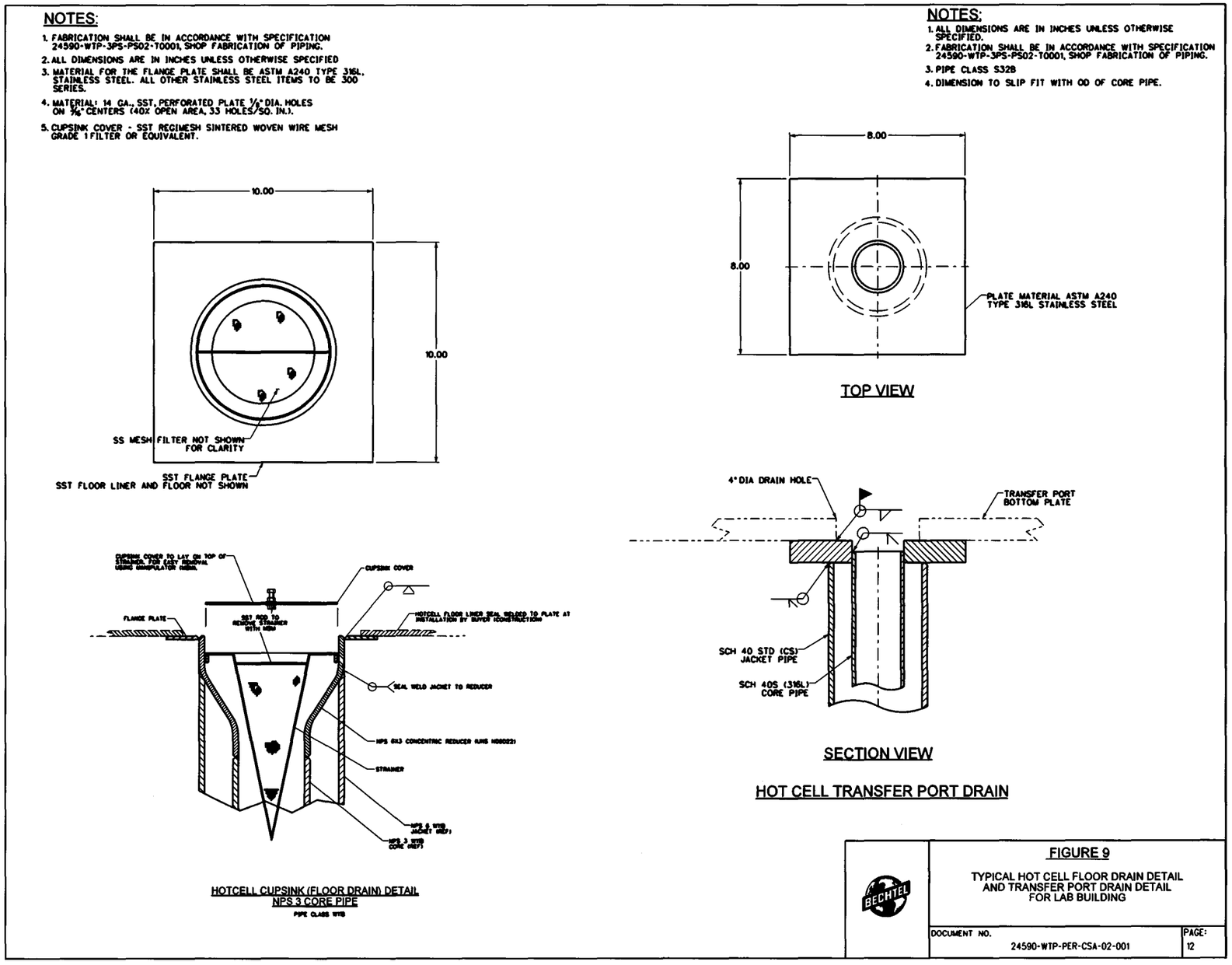

**Figure 10 Typical HLW Building Sump Details & Typical PT Building SS Liner/CS Embed Detail**

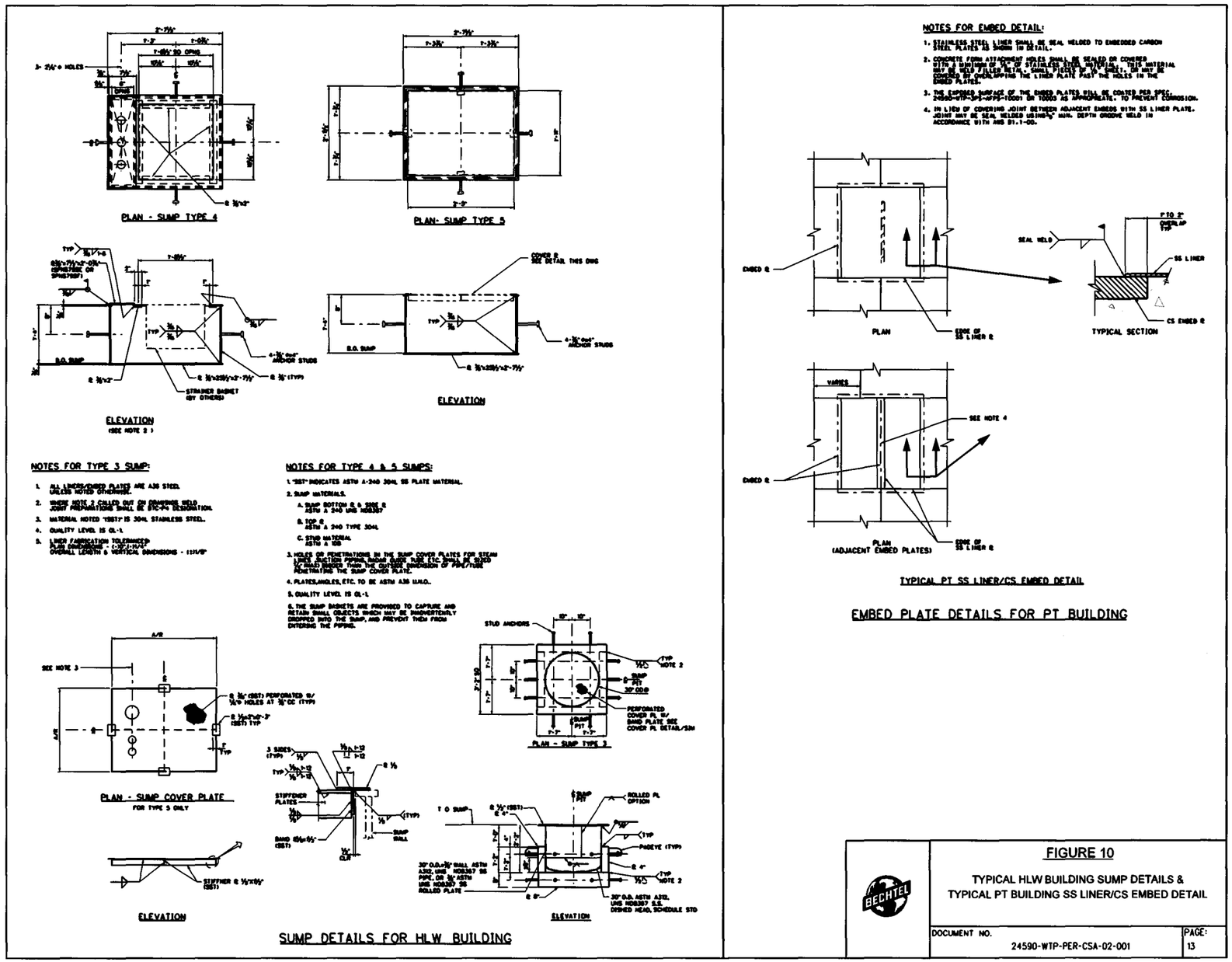

**Figure 11 Typical Laboratory C3 Piping and Pump Pit Sump and Weir Details for LAB Building**

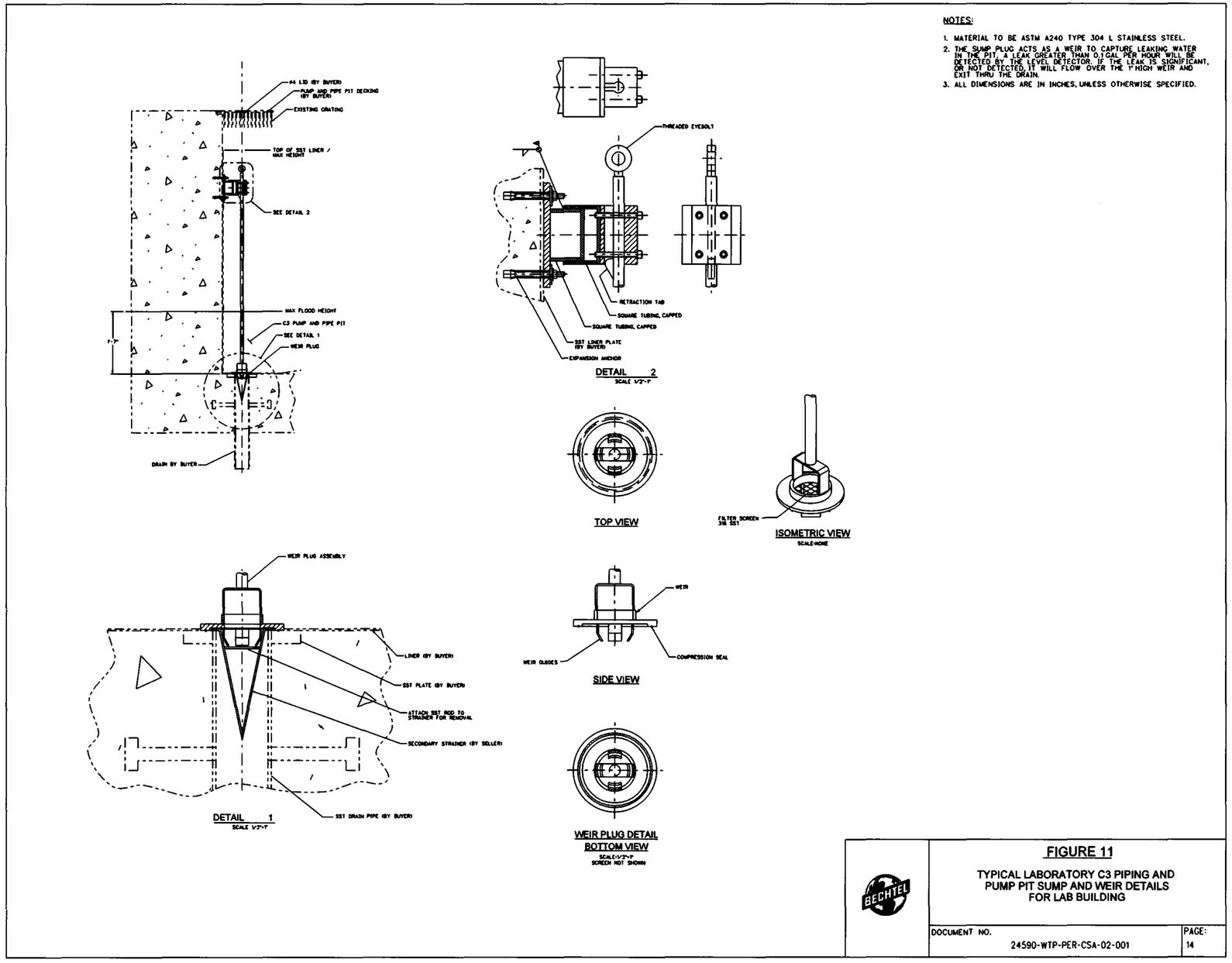

**Figure 12 Typical RLD Condensate Tank Support Details for PT Building (Exterior)**

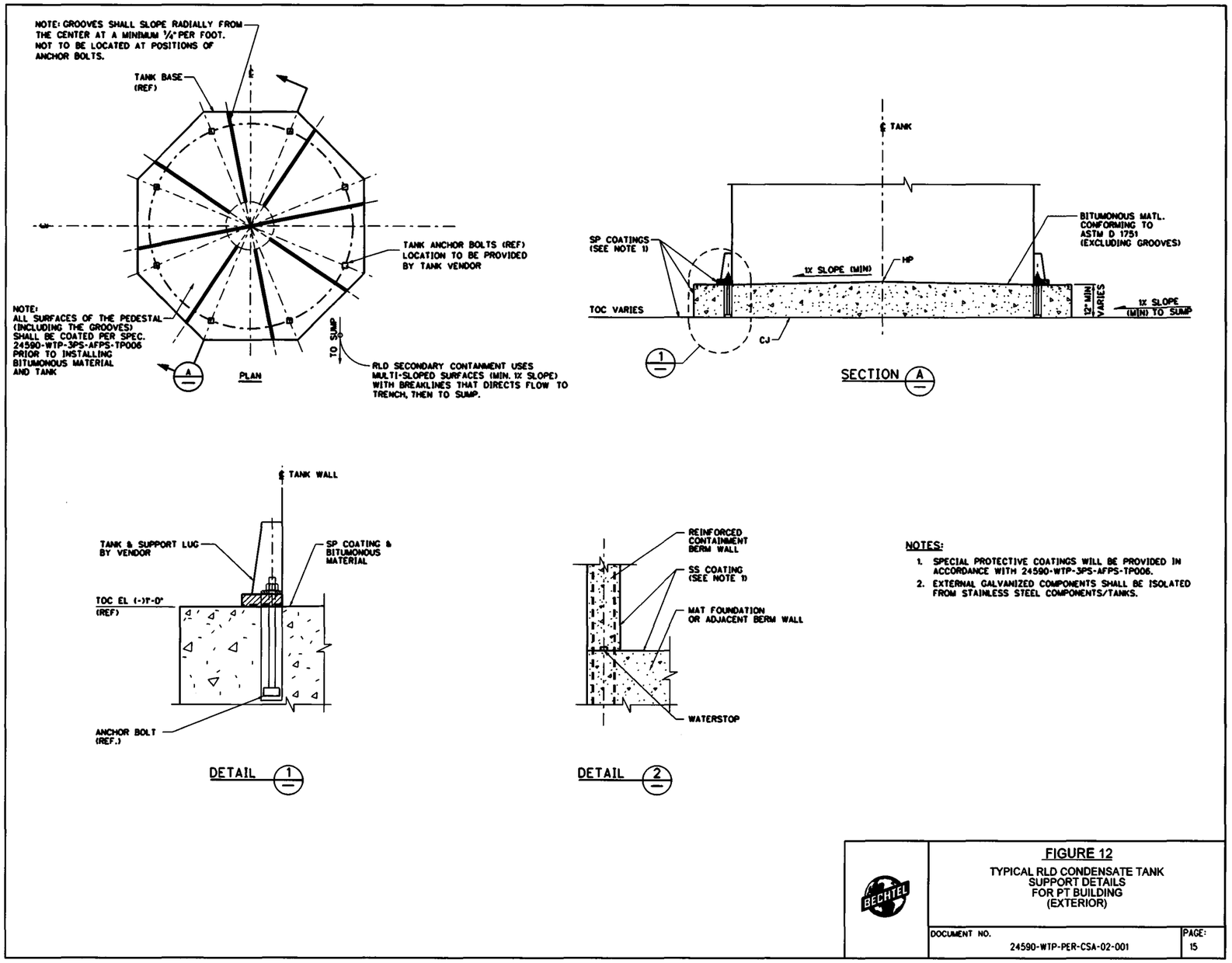

**Figure 13 LAW Melter Encasement Assembly Secondary Containment Details**

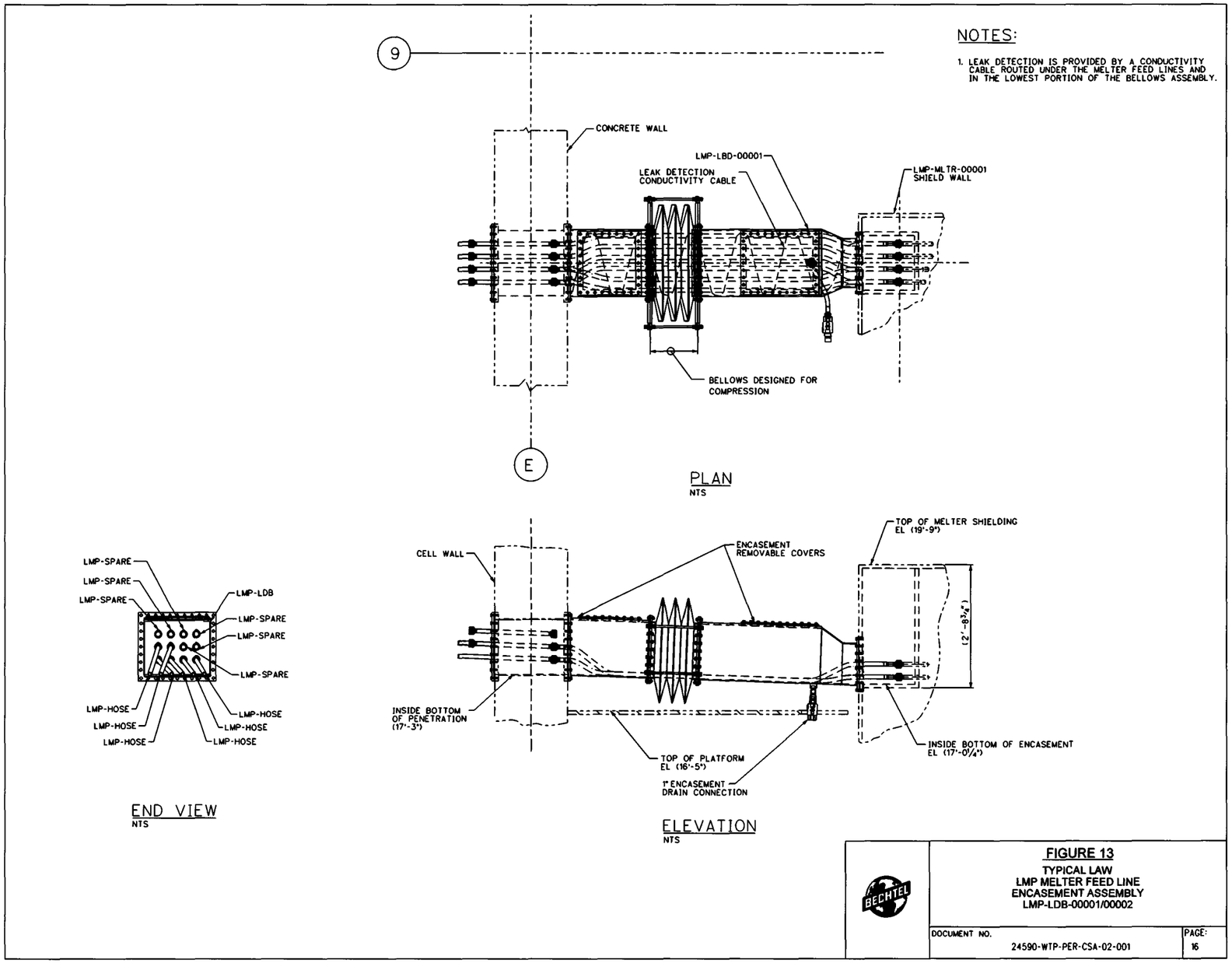

**Figure 14 Typical Autosampling System ASX Sampler Full Half Section**

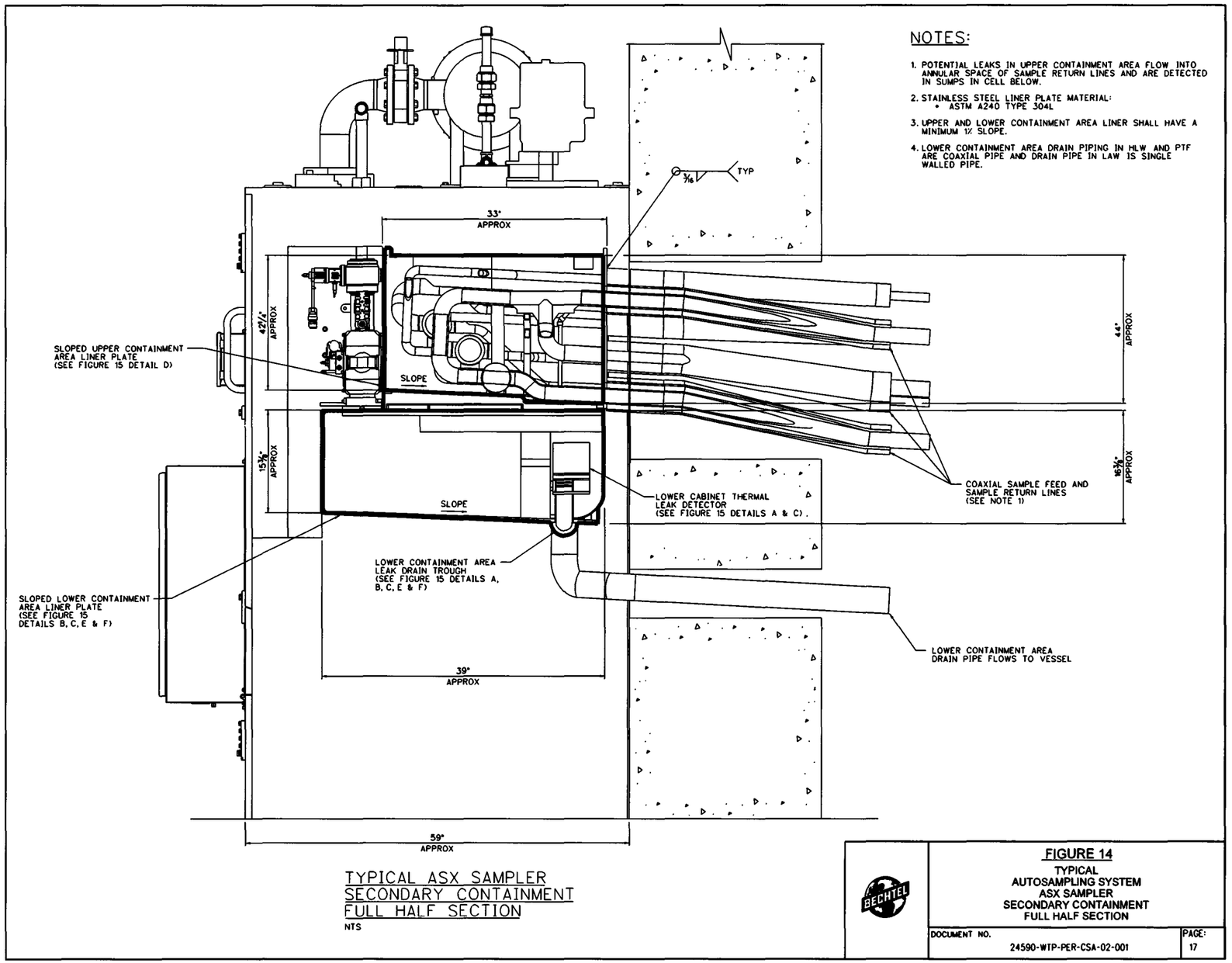

**Figure 15 Typical Autosampling System Lower Containment Area Leak Detection Details**

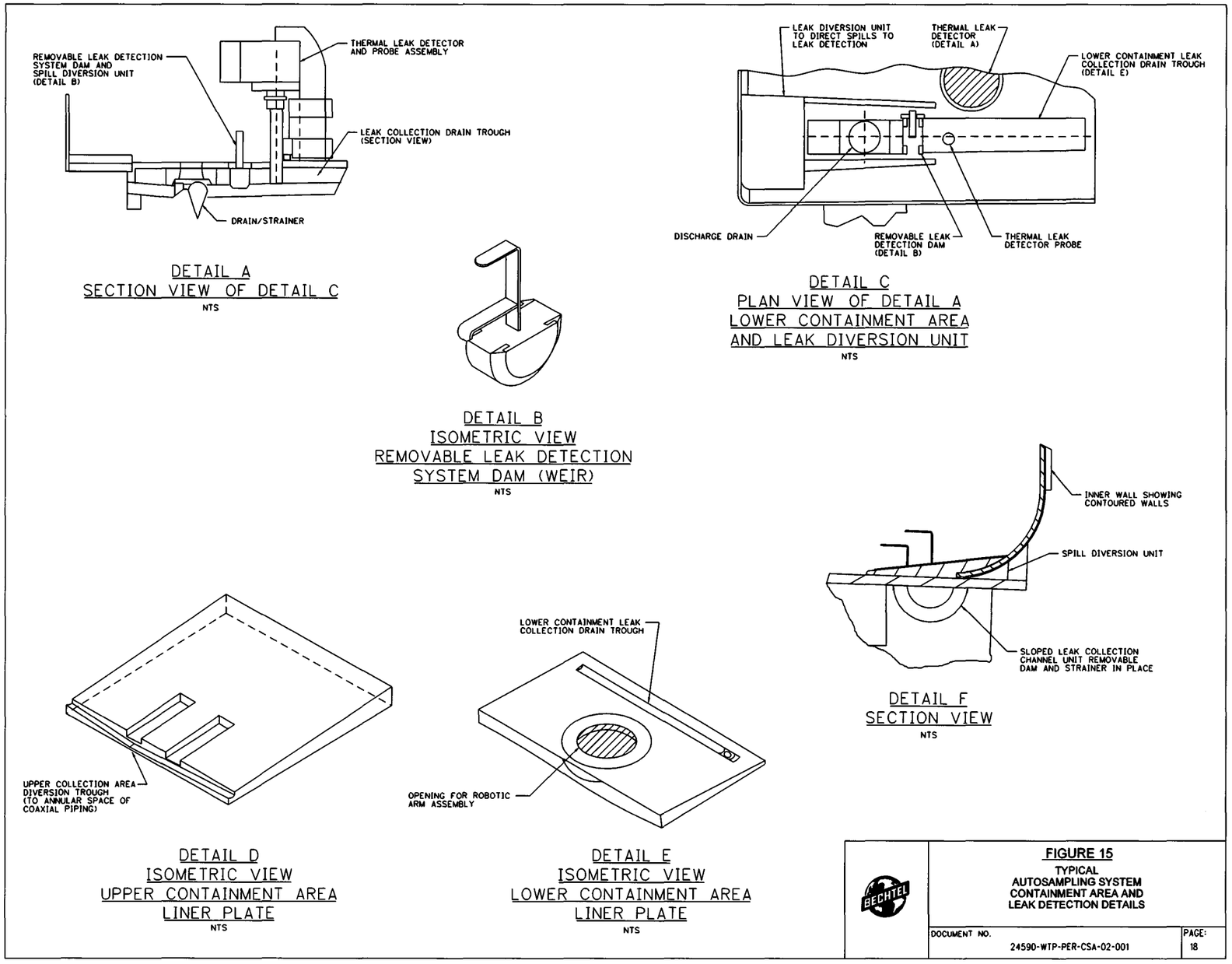

**Figure 16 HLW Building HOP Drum Transfer Tunnel Drip Pan Plan, Sections and Details**

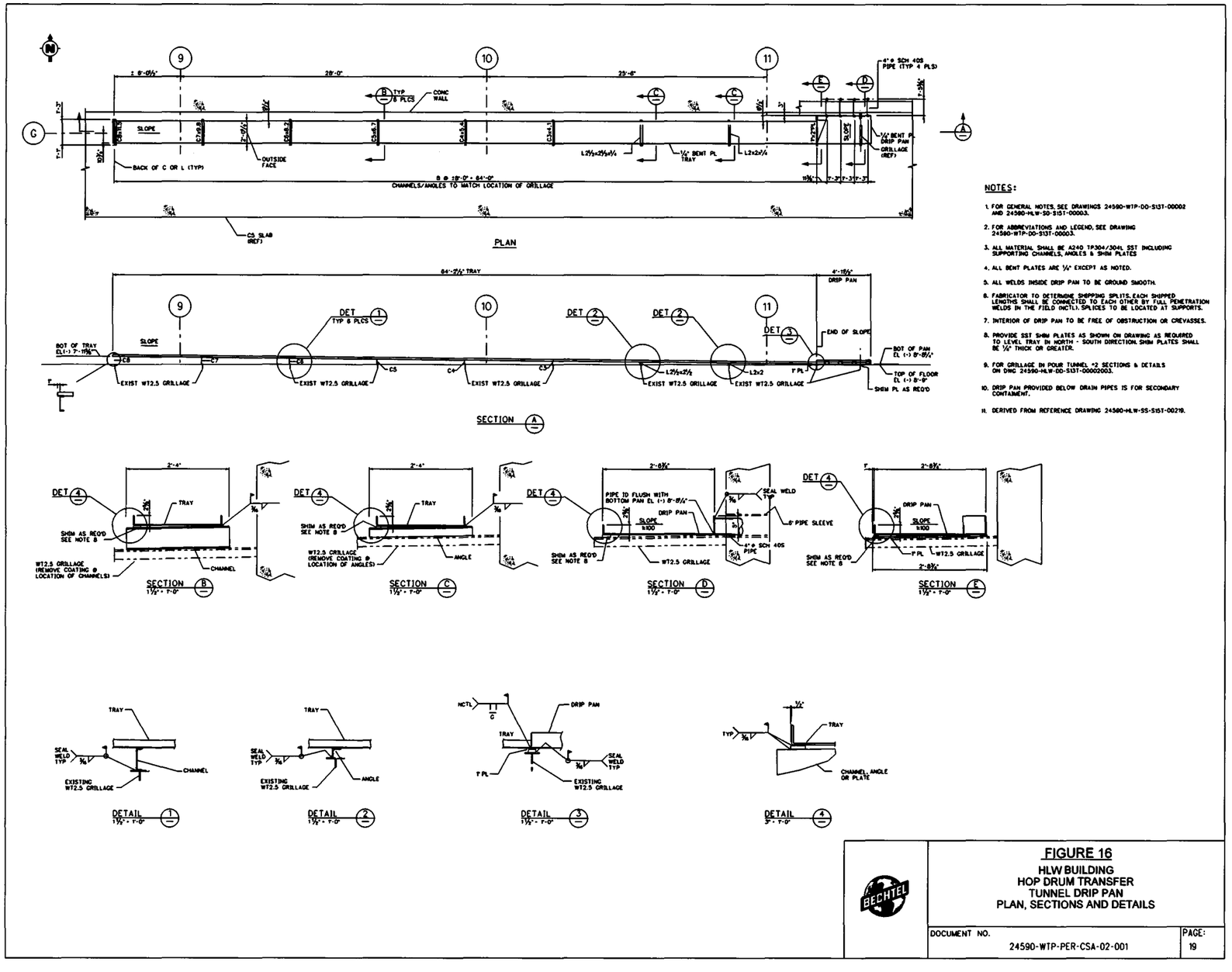

**Figure 17 Typical Details; Waterstops; EMF Buildings**

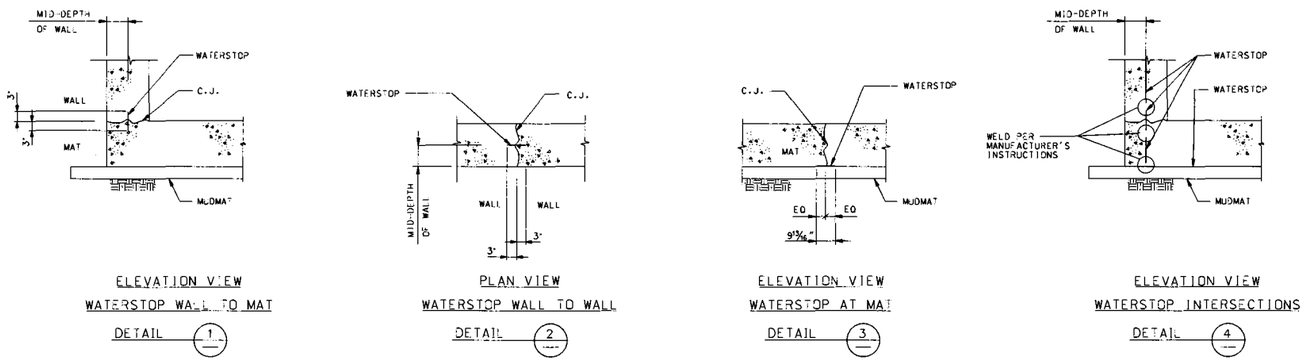


**FIGURE 17**

**TYPICAL DETAILS
WATERSTOPS
EMF BUILDINGS**

DOCUMENT NO. 24590-WTP-PER-CSA-02-001 | PAGE 20

**Figure 18 Typical Details; Liner Plate and Grillage Support Details; EMF Buildings**

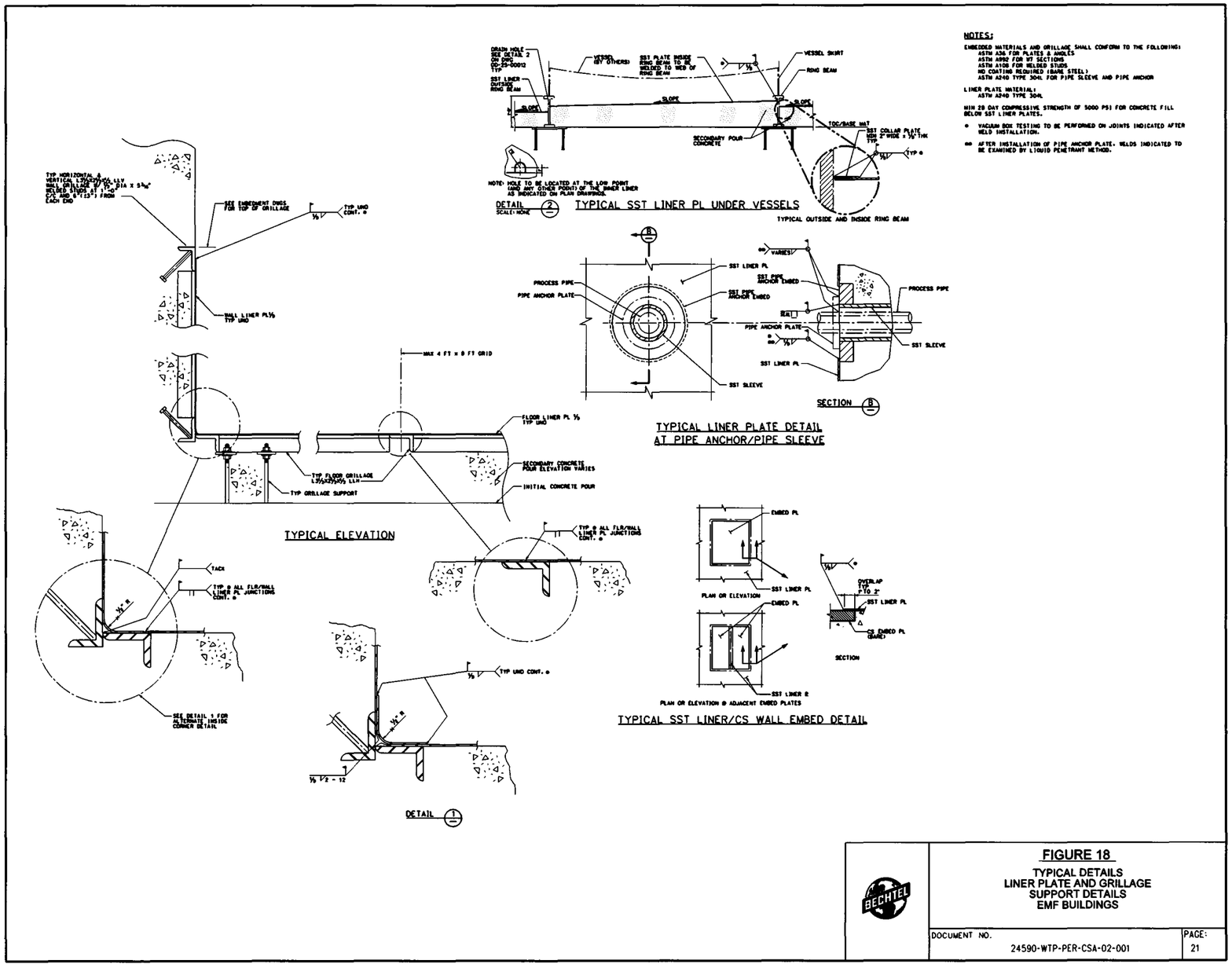

**Figure 19 Typical Details; Equipment Support and Ring Beam; EMF Buildings**

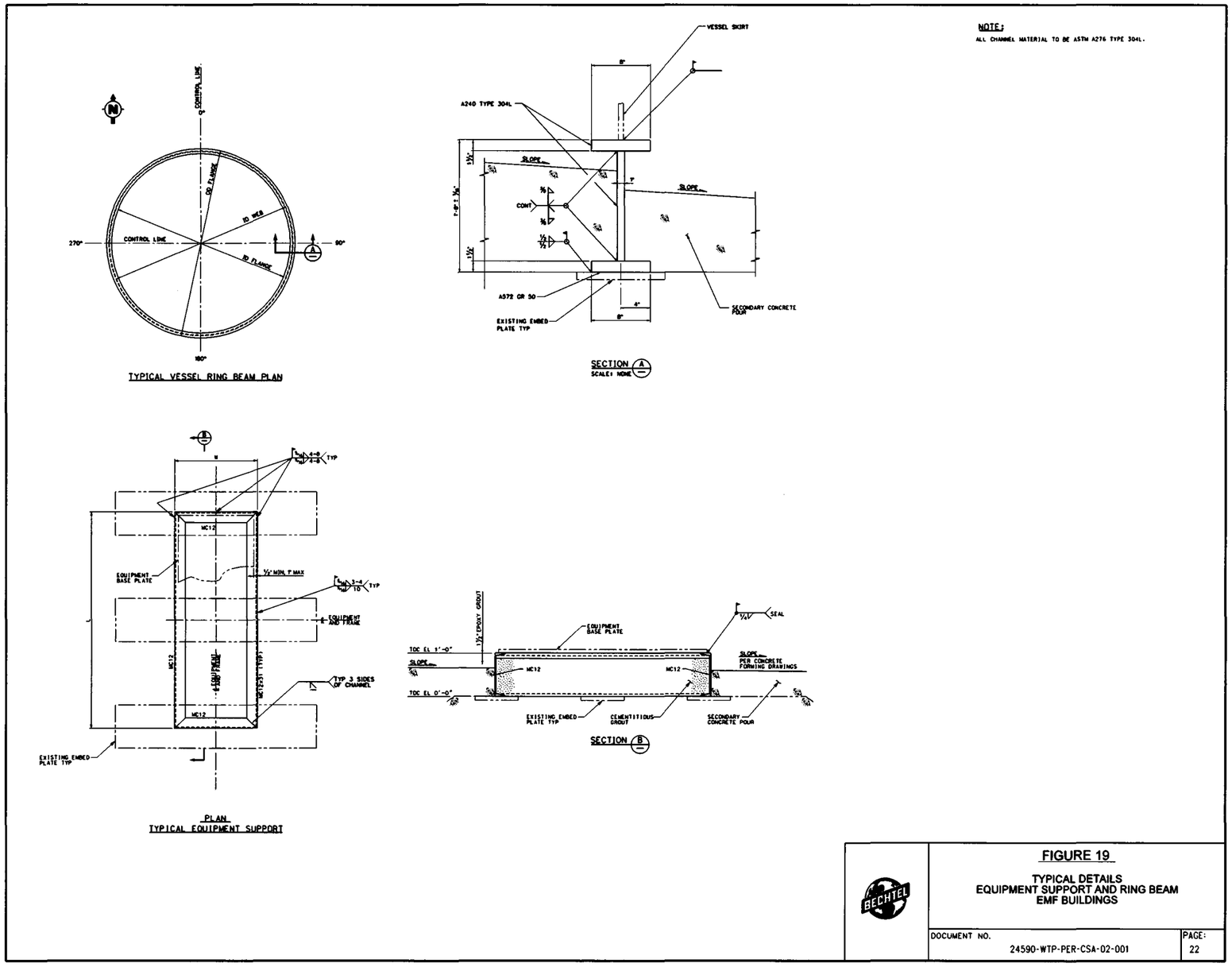


FIGURE 19

TYPICAL DETAILS
EQUIPMENT SUPPORT AND RING BEAM
EMF BUILDINGS

DOCUMENT NO. 24590-WTP-PER-CSA-02-001 | PAGE: 22

**Figure 20 Typical Details; Sumps; EMF Buildings**

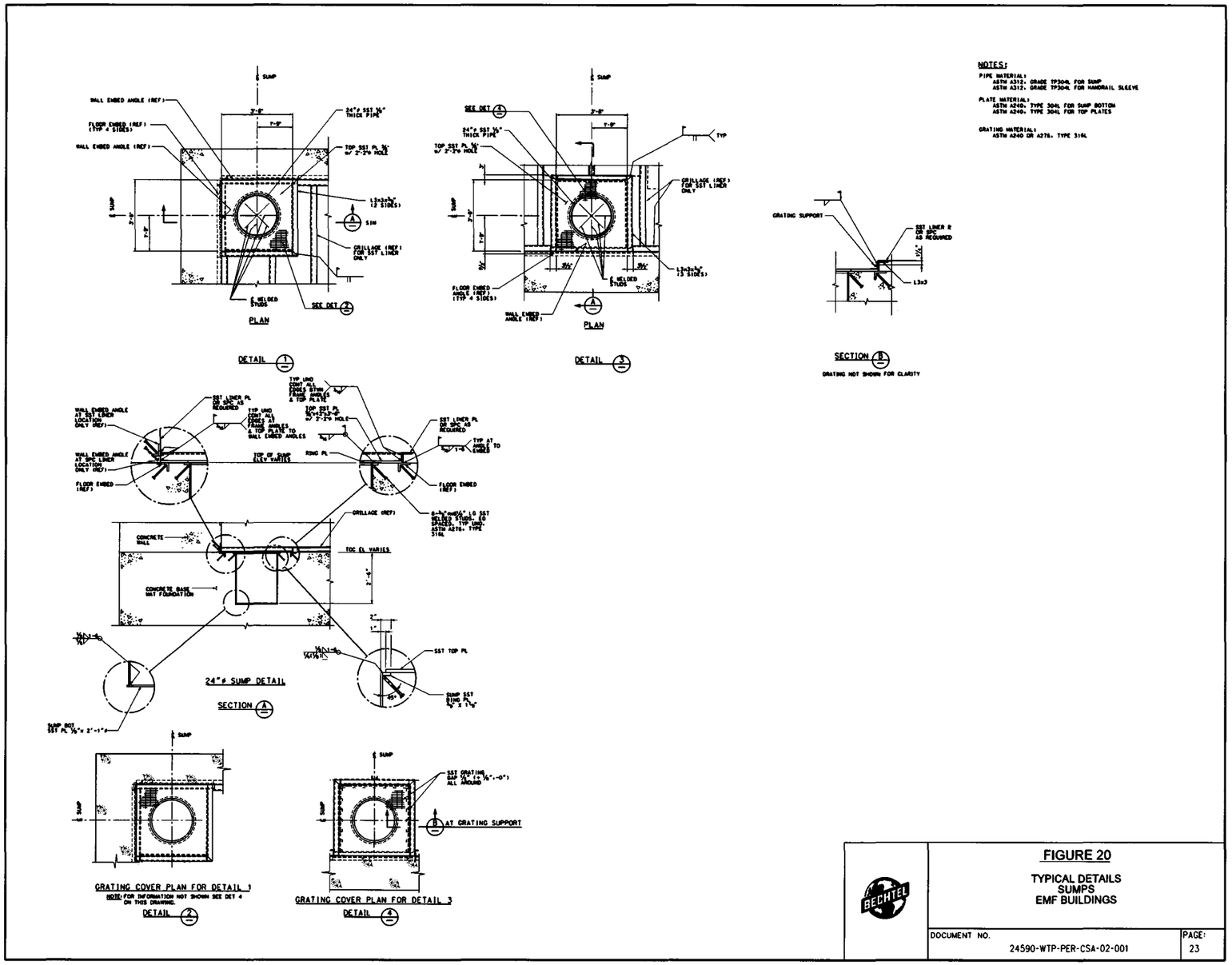

**Figure 21 Typical Details; Wall Penetrations; EMF Buildings**

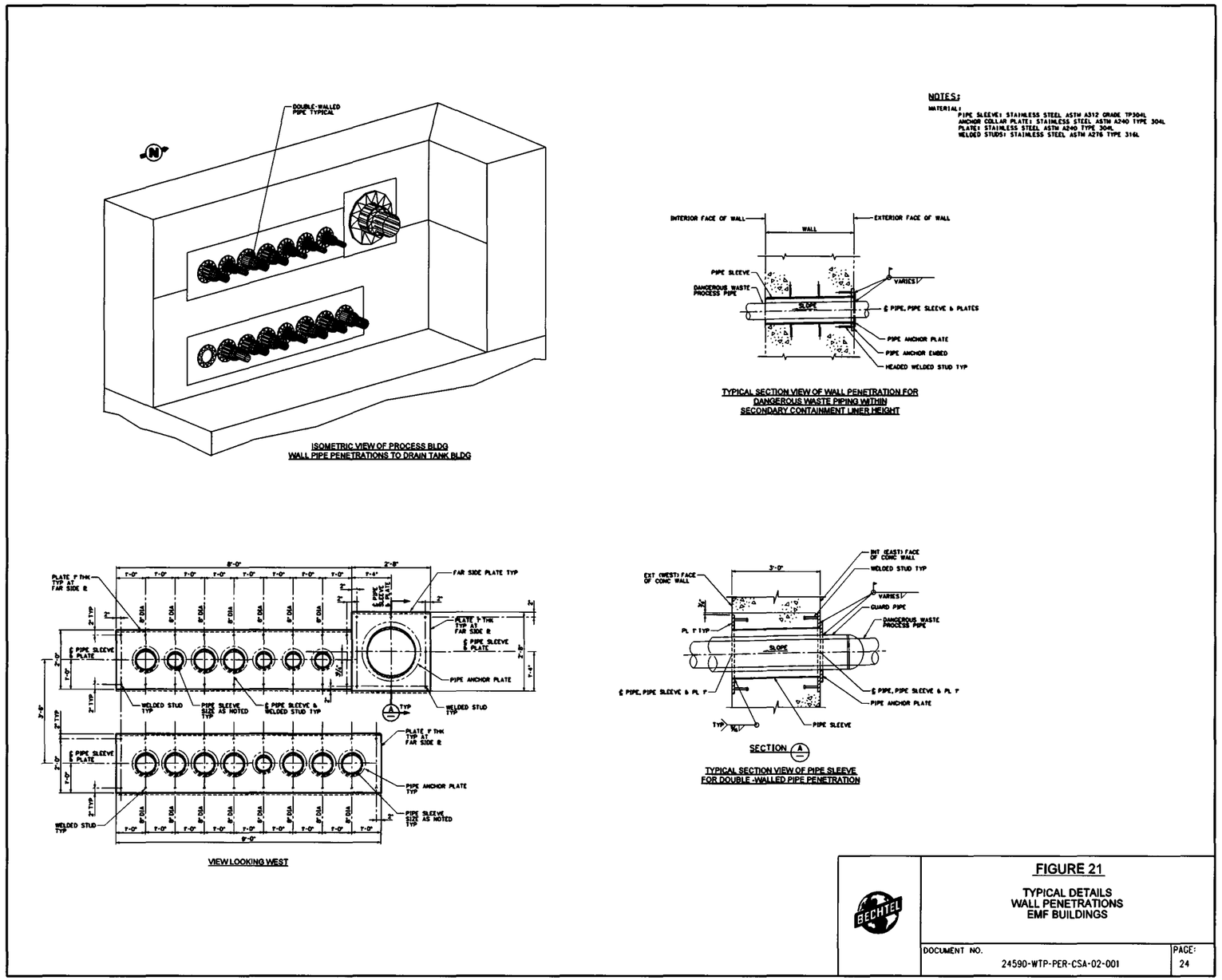
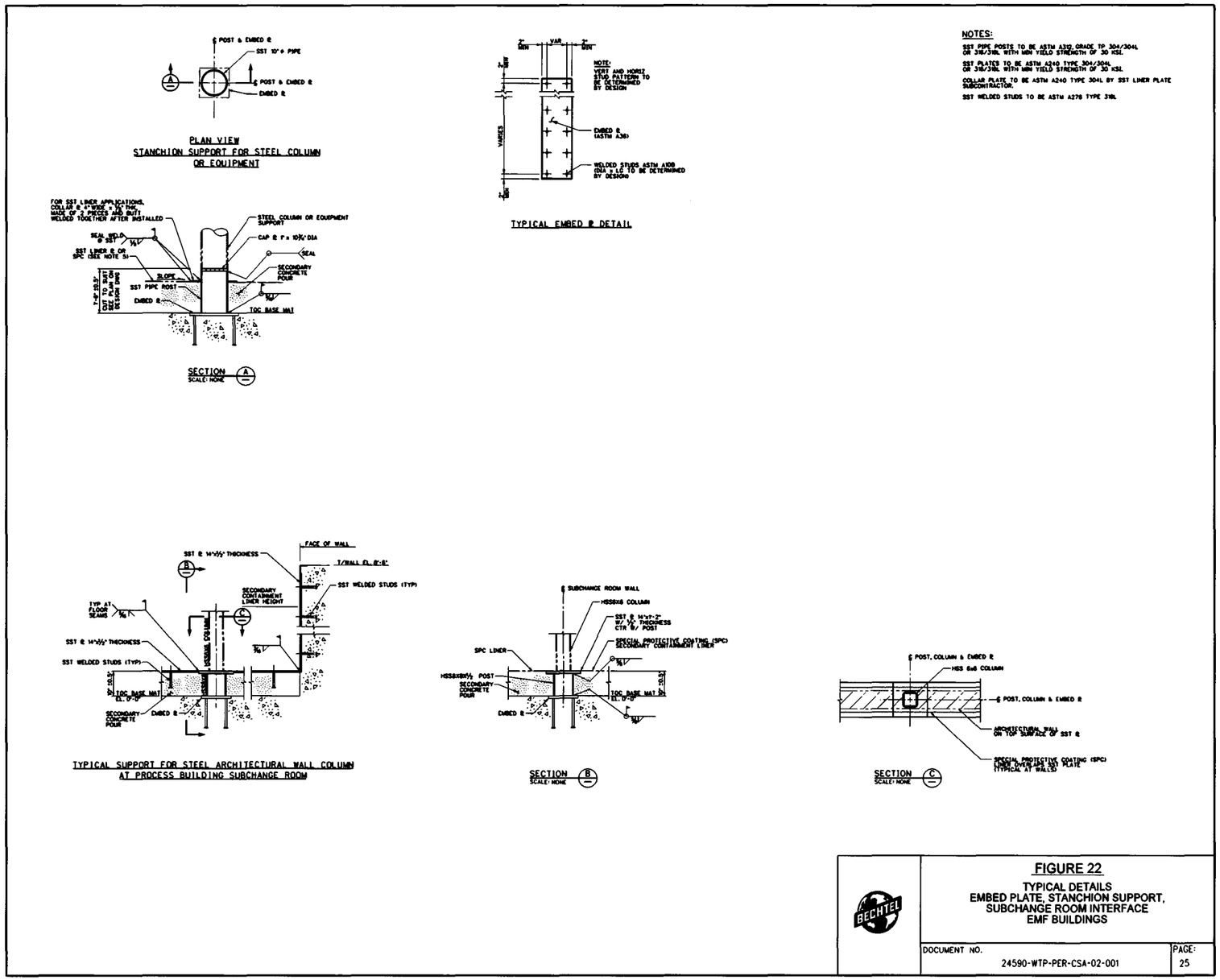
**Figure 22 Typical Details; Embed Plate, Stanchion Support, Subchange Room Interface; EMF Buildings**