9513384.1867
START
JEG0551
0042458
2F
96

DOE/EA-0942

Environmental Assessment

Return of Isotope Capsules to the Waste Encapsulation and Storage Facility, Hanford Site, Richland, Washington

NOV 1995
RECEIVED
EDMC

U.S. Department of Energy
Washington, D.C.

May 1994

RECEIVED
NOV 1994

9513384.1868

DOE/EA - 0942

ENVIRONMENTAL ASSESSMENT

RETURN OF ISOTOPE CAPSULES

TO THE

WASTE ENCAPSULATION AND STORAGE FACILITY

HANFORD SITE, RICHLAND, WASHINGTON

U.S. DEPARTMENT OF ENERGY

MAY 1994

This page intentionally left blank.

Executive Summary

Cesium-137 and strontium-90 isotopes were removed from Hanford Site high-level tank wastes, and were encapsulated at the Hanford Site's Waste Encapsulation and Storage Facility (WESF), beginning in 1974. Over the past several years, radioactive isotope capsules have been sent to other U.S. Department of Energy (DOE)-controlled sites to be used for research and development applications, as well as leased to a number of commercial facilities for commercial applications (e.g., sterilization of medical supplies). Due to uncertainty regarding the cause of the release of a small quantity of cesium-137 to an isolated water basin from a WESF cesium-137 capsule in a commercial facility in Decatur, Georgia, the DOE has determined that it needs to return leased capsules from IOTECH, Incorporated (IOTECH), Northglenn, Colorado; Pacific Northwest Laboratory (PNL), Richland, Washington; and the Applied Radiant Energy Corporation (ARECO), Lynchburg, Virginia; to the WESF Facility on the Hanford Site, to ensure safe management and storage, pending final disposition. All of these capsules located at the commercial facilities were successfully tested during Calendar Year 1993, and none showed any indication of off-normal specifications. Storage at the WESF will continue under the actions selected in the Record of Decision for the *Final Environmental Impact Statement: Disposal of Hanford Defense High-Level, Transuranic and Tank Wastes, Hanford Site, Richland, Washington.*

The DOE-controlled sites for cesium-137 capsules were Sandia National Laboratory, Albuquerque, New Mexico; PNL, Richland, Washington; and Oak Ridge National Laboratory (ORNL), Oak Ridge, Tennessee. Commercial facilities included Radiation Sterilizers Incorporated (RSI), Decatur, Georgia and Westerville, Ohio; IOTECH, Northglenn, Colorado; and ARECO, Lynchburg, Virginia. All cesium capsules have been safely transported from RSI. Capsules from RSI not meeting WESF-acceptance criteria for

pool storage were shipped to DOE-controlled facilities. The capsules were then transported to PNL. Presently, the following outstanding inventory of WESF cesium capsules needs to be returned to the WESF:

- 309 capsules located at IOTECH
- 25 capsules at ARECO
- 33 capsules at PNL.

Some WESF-manufactured strontium capsules have been shipped to the Nevada Test Site (NTS), ORNL, and PNL. Five strontium capsules at PNL would be returned to the WESF as part of the proposed action. The DOE is not proposing to return NTS strontium capsules to the WESF. The DOE will prepare an appropriate separate *National Environmental Policy Act of 1969* review on alternatives for ultimate disposition of these capsules, including the alternative of leaving them in place. Further, all strontium capsules at ORNL (also not in the scope of the proposed action) have been cut open, and the strontium inventory used for other programs.

The following two paragraphs describe a typical sequence of activities necessary for transportation packaging loading.

Remote physical testing and identification (either underwater or in an above-ground, shielded cell for remote handling [hot cell]), as required by the packaging certification, would be conducted at the present location on each capsule to ensure that the configuration of

the capsule had not deteriorated (e.g., swelling). Remote visual inspection also would be conducted to evaluate potential corrosion. After passing examination, up to 16 cesium capsules would be loaded into appropriate packaging (i.e., shipping casks). The packaging would have DOE and/or U.S. Nuclear Regulatory Commission (NRC) certification, both of which comply with specific NRC regulations. These requirements assure that the packaging would provide appropriate radiation shielding and containment in the event of an accident. When the packaging is loaded underwater, the water in the packaging would be removed and the packaging sealed and leak tested. Hot cell loading operations would be the same, except that loading would not take place underwater, and therefore no removal of liquid would be required. Continuous radiation monitoring of pool cells and/or hot cells at the facilities would verify capsule integrity.

The packaging would be appropriately secured on a truck trailer, both of which would undergo independent inspection prior to transport. For example, the state Highway Patrol would conduct a complete vehicle, packaging, and driver(s) inspection in accordance with prescribed procedures. The procedures include provisions for carrier compliance with federal and state regulations for Highway Route Control Quantity material, computerized satellite tracking, and vehicle inspection at origin and in route. The procedures would ensure appropriate standards, specifications, and regulations, including U.S. Department of Transportation (DOT), were met.

The packaging would be transported under DOE and DOT requirements, which include the aforementioned procedures. Approximately 20 shipments from Colorado and two shipments from Virginia would be required to recover the cesium capsules. Individual

transport times from Colorado and Virginia to the Hanford Site are estimated to be 1 day and 4 days, respectively. Approximately four shipments (three shipments for cesium capsules, and one shipment for strontium capsules) would be required to return the capsules to the WESF from PNL, which is located on the Hanford Site.

Once at the WESF, the capsules would be unloaded in hot cells, examined, and moved into the existing pool cells for storage.

A capsule that failed initial testing at the point of origin would be isolated, individually overpacked and transported to the Hanford Site in NRC and/or DOE-approved casks. The capsule would be placed in existing hot cell storage at the WESF with other capsules which had previously failed testing. The capsule would be re-encapsulated, in accordance with WESF operating procedures, to meet WESF pool storage criteria, and stored in the WESF pool.

Alternatives have been considered in this analysis. Along with the No-Action Alternative, the DOE considered alternative transportation modes and alternative truck transportation routes. In addition, the potential for significant individual and cumulative environmental impacts due to the conduct of the proposed action has been analyzed. No substantial increase in corridor states or Hanford Site environmental impacts would be expected from the proposed action. Environmental impacts from postulated accident scenarios also were evaluated, and indicated that the risks associated with the proposed action would be small.

Glossary

Acronyms and Initialisms

ARECO	Applied Radiant Energy Corporation
BUSS	Beneficial Uses Shipping System
CFR	*Code of Federal Regulations*
CY	Calendar Year
DOE	U.S. Department of Energy
DOH	State of Washington Department of Health
DOT	U.S. Department of Transportation
EA	Environmental Assessment
GE	General Electric
HDW-EIS	*Final Environmental Impact Statement: Disposal of Hanford Defense High-Level, Transuranic and Tank Wastes, Hanford Site, Richland, Washington*
IOTECH	IOTECH, Incorporated
LCF	latent cancer fatality
NRC	U.S. Nuclear Regulatory Commission
NTS	Nevada Test Site
ORNL	Oak Ridge National Laboratory
PNL	Pacific Northwest Laboratory
rem	roentgen equivalent man
RSI	Radiation Sterilizers Incorporated
WESF	Waste Encapsulation and Storage Facility

Definition of Terms

As Low As Reasonably Achievable. An approach to radiation protection to control or manage exposures (both individual and collective to the workforce and general public) as low as social, technical, economic, practical, and public policy considerations permit.

Background radiation. That level of radioactivity from naturally occurring sources; principally radiation from cosmogenic and primordial radionuclides.

Capsule. As used here, stainless-steel cylinders (pipe-within-a-pipe design) used for containment of isotopic strontium and cesium which were recovered from radioactive wastes and converted to, respectively, the fluoride and chloride salts.

Cask. A container designed for transporting radioactive materials; design usually includes special shielding, handling, and sealing features to provide positive containment and to minimize personnel exposure.

This page intentionally left blank.

Table of Contents

1.0 Purpose and Need for Agency Action 1-1

2.0 Background 2-1

3.0 Alternatives Including the Proposed Action 3-1
- 3.1 Proposed Action 3-1
- 3.2 Alternatives to the Proposed Action 3-3
  - 3.2.1 No-Action Alternative 3-3
  - 3.2.2 Alternative Transportation Modes 3-3
  - 3.2.3 Alternative Truck Transportation Routes 3-4
  - 3.2.4 Other Alternatives 3-4

4.0 Affected Environment 4-1
- 4.1 IOTECH, Incorporated 4-1
- 4.2 Applied Radiant Energy Company 4-1
- 4.3 Waste Encapsulation and Storage Facility 4-1

5.0 Environmental Impacts 5-1
- 5.1 Proposed Action: Impacts from Routine Operations 5-1
  - 5.1.1 Capsule Packaging and Storage at the Waste Encapsulation and Storage Facility 5-1
  - 5.1.2 Transportation 5-3
- 5.2 Proposed Action: Impacts from Accidents 5-5
  - 5.2.1 Capsule Handling and Storage 5-5
  - 5.2.2 Transportation 5-6
- 5.3 Proposed Action: Cumulative Impacts 5-7

6.0 Permits and Regulatory Requirements 6-1
- 6.1 Facility Compliance 6-1
- 6.2 Transportation Requirements 6-1

7.0 Agencies Consulted 7-1

8.0 References 8-1

Table of Contents (cont.)

Appendices

A. Details Supporting Isotope Capsule Return to the Waste Encapsulation and Storage Facility A-1

B. Transportation Impact Analysis B-1

C. Proposed Disposal of Nevada Test Site Waste Encapsulation and Storage Facility Strontium Capsules C-1

D. Key Regulatory Elements for Isotope Capsule Shipments D-1

List of Figures

1. Proposed Isotope Capsule Shipment Route from Colorado F-1

2. Proposed Isotope Capsule Shipment Route from Virginia F-2

3. Hanford Site F-3

List of Tables

1. Strontium Capsule Rupture Consequences 5-5

9513384.1873

1.0 Purpose and Need for Agency Action

Cesium-137 and strontium-90 isotopes were removed from Hanford high-level tank wastes, and were encapsulated at the Hanford Site's Waste Encapsulation and Storage Facility (WESF), beginning in 1974. Over the past several years, radioactive isotope capsules have been sent to other U.S. Department of Energy (DOE)-controlled sites to be used for research and development applications, as well as leased to a number of commercial facilities for commercial applications (e.g., sterilization of medical supplies). Due to uncertainty regarding the cause of the release of a small quantity of cesium-137 to an isolated water basin from a WESF cesium-137 capsule in a commercial facility in Decatur, Georgia, the DOE has determined that it needs to return all leased capsules to the WESF on the Hanford Site, to ensure safe management and storage, pending final disposition. Appendix A provides additional details supporting this determination.

Storage at the WESF will continue under the actions selected in the Record of Decision for the *Final Environmental Impact Statement: Disposal of Hanford Defense High-Level, Transuranic and Tank Wastes, Hanford Site, Richland, Washington* (HDW-EIS) (DOE 1987). As stated in the "Disposal of Hanford Defense High-Level, Transuranic and Tank Wastes, Hanford Site, Richland, Washington; Record of Decision," (54 FR 12440) the DOE decided to store encapsulated cesium and strontium wastes in a pool of water at the WESF until a geologic repository is available to receive the capsules for disposal.

The HDW-EIS is incorporated by reference for this Environmental Assessment (EA). Copies of the HDW-EIS may be obtained from:

Mr. Tom Bauman, Communications Division
U.S. Department of Energy,
Richland Operations Office
Richland, Washington 99352
(509) 376-7378

This page intentionally left blank.

2.0 Background

Historically, radioactive cesium-137 and strontium-90 have been removed from Hanford Site nuclear waste to reduce the thermal heat content in underground storage tank waste. At the WESF, the cesium was converted to chloride salt, and the strontium converted to a fluoride. The cesium was doubly encapsulated in stainless steel containers that were tested and certified as meeting the performance requirements of 10 *Code of Federal Regulations* (CFR) Part 71.75, "Qualification of Special Form Radioactive Material." The strontium also was doubly encapsulated, with the inner capsule Hastelloy®[1] Alloy C, and the outer capsule material stainless steel. The capsules were placed in interim pool (i.e., enclosed water basins which provide shielding and cooling) storage, pending final disposal.

A total of 1,577 cesium capsules and 640 strontium capsules were manufactured at the WESF. Nominally, today, the activity in a cesium capsule is approximately 45,000 curies. The activity in a strontium capsule is approximately 50,000 curies. These curie values are less than those shown in Appendix B (Tables B-3 and B-4) due to radioactive decay over time. These decayed values are well below the maximum design specifications (Tables B-3 and B-4, Appendix B). Many WESF capsules were shipped offsite for research and development or commercial applications. The DOE-controlled sites for cesium-137 capsules were Sandia National Laboratory, Albuquerque, New Mexico; Pacific Northwest Laboratory (PNL), Richland, Washington; and Oak Ridge National Laboratory (ORNL), Oak Ridge, Tennessee. Commercial facilities include Radiation Sterilizers Incorporated (RSI), Decatur, Georgia and Westerville, Ohio; IOTECH, Incorporated (IOTECH), Northglenn, Colorado; and the Applied Radiant Energy Corporation (ARECO), Lynchburg, Virginia.

Some WESF-manufactured strontium capsules have been shipped to the Nevada Test Site (NTS), ORNL, and PNL. The DOE is not proposing to return NTS strontium capsules to the WESF. The DOE will prepare an appropriate separate *National Environmental Policy Act of 1969* review on alternatives for ultimate disposition of these capsules, including the alternative of leaving them in place. The proposed disposal of the WESF strontium capsules at the NTS is discussed in Appendix C. Further, all strontium capsules at ORNL (also not in the scope of the proposed action) have been cut open, and the strontium inventory used for other programs.

[1]Hastelloy is a Registered Trade Mark of Cabot Corporation.

All cesium capsules have been safely transported from RSI. Capsules from RSI, not meeting WESF-acceptance criteria for pool storage, were shipped initially to DOE-controlled facilities at PNL. Presently, the following outstanding inventory of WESF cesium capsules needs to be returned to the WESF:

- 309 capsules located at IOTECH
- 25 capsules at ARECO
- 33 capsules at PNL.

Additionally, five strontium capsules at PNL would be returned to the WESF as part of the proposed action. All of these capsules located at the commercial facilities were successfully tested during Calendar Year (CY) 1993, and none showed any indication of off-normal specifications.

3.0 Alternatives Including the Proposed Action

3.1 Proposed Action

The proposed action would return the WESF isotope capsules from ARECO, IOTECH and PNL, to existing WESF pool cells for continued storage. A typical sequence of activities for transportation packaging is addressed in the following two paragraphs.

Remote physical testing and identification (either underwater or in any above-ground, shielded cell for remote handling [hot cell]), as required by the packaging Certificate of Compliance (i.e., safety requirements), would be conducted at the present location on each capsule to ensure that the configuration of the capsule had not deteriorated (e.g., swelling). Remote visual inspection also would be conducted to evaluate potential corrosion. After passing examination, up to 16 cesium capsules would be loaded into appropriate packaging. The number of capsules in a package would be determined by the total heat load of the capsules, not exceeding packaging thermal payload specifications. For example, if the total thermal limit of a package (Appendix B) for a typical description of the transportation packaging) is 2,000 watts, and an average decayed cesium capsule heat load is 200 watts, then only ten capsules would be shipped in the packaging. Individual capsule decayed heat load would be evaluated onsite, prior to loading and shipment per approved procedures in accordance with DOE and/or U.S. Nuclear Regulatory Commission (NRC) certification requirements (both of which comply with specific NRC regulations such as 10 CFR 71). These requirements assure that the packaging would provide appropriate radiation shielding and containment in the event of an accident. To mitigate potential unique safety considerations (i.e., internal hydraulic pressurization, hydrogen generation by radiolysis, and dissolution of cesium chloride) the water in the packaging would be removed as the packaging was loaded underwater (*Beneficial Uses Shipping System (BUSS) Cask Safety Analysis Report for Packaging* [SNL 1991]). The packaging then would be sealed and leak tested. Hot cell loading operations would be the same, except that loading would not take place underwater, and therefore removal of liquid would not be required. Continuous radiation monitoring of pool cells and/or hot cells at the facilities would verify capsule integrity.

The packaging would be appropriately secured on a truck trailer and radiologically measured by trained personnel using prescribed procedures (e.g., personal dosimetry) prior to release. Both the packaging and the trailer would undergo independent inspection prior to transport. For example, the state Highway Patrol would conduct a complete vehicle, packaging, and driver(s) inspection, including verification of radiological dose rates, in accordance with prescribed procedures. The procedures include provisions for carrier compliance with federal and state regulations for Highway Route Control Quantity material; computerized satellite tracking; and vehicle inspection at origin and in route. The procedures would ensure appropriate standards, specifications, and regulations, including U.S. Department of Transportation (DOT) guidelines, and carrier security requirements were met.

The packaging would be transported under DOE requirements (in accordance with DOT regulations), including the aforementioned procedures. The DOE has prepared a cesium transportation plan from IOTECH, delineating organizational responsibilities (including DOE's radiological assistance program and training for first-responders in the corridor States), shipment schedule, communications, emergency considerations, and transportation requirements. The DOE will issue the transportation plan to the affected state and tribal governmental organizations prior to the proposed shipment. Cesium transportation plans also would be prepared and issued prior to potential ARECO and PNL shipments. Approximately 20 shipments from Colorado and two shipments from Virginia would be required to recover the cesium capsules. The proposed shipment routes are shown in Figures 1 and 2. Due to computer modeling limitations, the actual route from Virginia dictated by Highway Route Control Quantity requirements (Figure 2) would be slightly different than the route analyzed in this EA. For example, the model does not attempt to minimize the number of urbanized areas with population over 100,000 traversed for a trip. The actual route minimizes population densities for a small section of highway in Virginia. Therefore, the calculated impacts in this EA are conservative. Transport times from Colorado and Virginia to the Hanford Site are estimated to be 1 day and 4 days, respectively. Approximately four shipments (three shipments for cesium capsules, and one shipment for strontium capsules) would be required to return the capsules to the WESF from PNL, which is located on the Hanford Site.

Some states will use the Commercial Vehicle Safety Alliance's Enhanced North American Inspection Standards as a guideline for their inspections, but only will enforce current federal vehicle-safety standards. These standards also include radiological measurements of the casks at each port of entry for the states participating in this inspection. The training for this type of inspection was conducted by DOE on the BUSS cask at the IOTECH Facility in Northglenn, Colorado.

Once at the WESF, the capsules would be unloaded in hot cells, examined, and moved into the existing pool cells for storage.

Any capsule that failed initial testing at the point of origin would be isolated, and individually overpacked (i.e., placed within a stainless-steel pipe which provides additional barrier between the radioactive cesium and the environment) underwater. The water would be removed and the overpack would be leak tested. The overpacks are designed to allow a shipment of a minimum of two capsules, with the potential for a five-capsule shipment. The overpack would be transported to the Hanford Site in NRC- and/or DOE-approved casks, after appropriate notifications, consistent with the transportation plan. This would include the previously mentioned capsules (Section 2.0) which were shipped from RSI and are presently stored at PNL. The capsule would be placed in existing hot-cell storage at the WESF with other capsules which had previously failed testing. The capsule would be re-encapsulated using WESF operating procedures, to meet WESF pool storage criteria, and stored in the WESF pool.

3.2 Alternatives to the Proposed Action

3.2.1 No-Action Alternative

Under the No-Action Alternative, the isotope capsules would remain in their existing locations. This alternative would eliminate transportation impacts (both routine and accident scenarios). However, the No-Action Alternative would be inconsistent with the DOE commitment to return the capsules for Hanford Site storage and would not allow the DOE to monitor and control the integrity of the capsules.

3.2.2 Alternative Transportation Modes

Other modes of transportation, such as rail, air transport, or barge, were considered. The potential hazards and risks associated with such transport would be similar to those experienced with ground truck transport.

The HDW-EIS provided an analysis of onsite and offsite rail transport of the strontium and cesium capsules, during routine shipments and accident conditions. During routine transport, doses to the crew and the surrounding population were small (0.35 person-roentgen equivalent man (rem) for the train crew, and 0.41 person-rem for the remainder of the population), and accident analyses found no fatalities as a result of the radiological risk due to potential train accidents. These consequences were calculated several years ago, based on the entire inventory of WESF cesium and strontium capsules at that time. The capsules have undergone radiolytic decay, which would reduce the potential exposure to workers and the general public. Further, rail shipments would require transport of capsules to and from railheads by truck. Therefore, logistics of accessibility to the existing facilities indicate that routine truck transport would minimize worker handling and travel time, thus mitigating exposure. Additionally, economic considerations favor truck transportation.

Air transportation of the capsules is possible, although it would be more expensive than other forms of transportation (i.e., dollars per unit mass). Radiation doses to persons not involved in the transportation essentially would be zero under normal conditions. Transport casks would be more likely to fail in an air accident and disperse the radioactive cesium over a wider area due to the tremendous forces usually involved in such an accident. As stated in the *National Transportation Statistics, Annual Report for 1992* (DOT 1992), probability of an air accident is about 20 times less than the probability of a truck accident, on a per-mile basis. Therefore, the risk from an air crash is low. Similar to rail transport, truck transportation to and from airports near the origin and destination would result in additional worker exposure from loading and unloading the aircraft.

Barge transportation is generally slow, and would increase worker exposure due to the longer transit time needed. No barge route, which would not require extensive transportation by truck and/or multiple loading and unloading of the capsules between the involved origins and destination, has been identified.

3.2.3 Alternative Truck Transportation Routes

All reasonable overland routes from the existing facilities storing the capsules were considered in support of the proposed action. Appropriate designated Highway Route Controlled Quantity routes were selected per applicable regulations, including DOE and DOT requirements for overland shipments of nuclear materials. Potential routes include evaluation of populations (both urban and rural); road surface; and distance. The routes chosen were selected to minimize transit time and radiological risk. Appendix D contains a more detailed discussion of highway routing requirements for these shipments.

3.2.4 Other Alternatives

No other reasonable alternatives were identified for returning the isotope capsules to the Hanford Site. The design, construction, and operation of a new storage facility would not be warranted given the existing capabilities of the WESF.

4.0 Affected Environment

The affected environment includes the transportation routes through the corridor states, as well as the existing commercial facilities housing the cesium capsules and the Hanford Site. The general environmental description of the routes was considered in the route-specific aggregate data used to analyze transportation impacts. Additional details are provided in Appendix B. The following sections provide a brief description of the commercial facilities, and a more detailed description of the Hanford Site.

4.1 IOTECH, Incorporated

The IOTECH Facility, a single, metal-exterior structure, is located in the industrial section of Northglenn, Colorado (population approximately 30,000), which is a suburb north of Denver. The facility was originally designed and constructed for sterilization of medical supplies (using the DOE's cesium capsules as irradiation sources). The capsules were shipped in 1985 and 1986, with the facility operating into CY 1991. The facility, licensed by the State of Colorado, ceased operating on May 31, 1991, to allow the DOE to remove the 309 WESF cesium capsules. The return of the cesium capsules would result in the removal of all radioactive material, and termination of activities involving radioactive material at the IOTECH Facility. Termination activities would be coordinated between the State of Colorado and IOTECH in accordance with applicable state regulations.

4.2 The Applied Radiant Energy Corporation

The NRC-licensed ARECO facility, a single structure in the industrial section of Lynchburg, Virginia (population approximately 67,000), was originally designed and constructed to irradiate wood products. Wood impregnated with a plastic resin was originally hardened using cobalt-60 as the irradiation source. The ARECO is presently using a cesium-137 source (i.e., 25 WESF capsules), which was shipped to Virginia in 1986. The return of the cesium capsules would result in the cessation of operations for this specific ARECO Facility. Termination activities would be coordinated between the NRC and ARECO, in accordance with applicable regulations. A new facility, licensed by the NRC, is planned to replace the terminated irradiator, returning to a cobalt irradiation source.

4.3 Waste Encapsulation and Storage Facility

As discussed in Section 2.0, the WESF has been operated to manage radioactive cesium and strontium recovered from Hanford Site tank waste. The cesium was converted to chloride salt, and the strontium converted to a fluoride. The cesium and strontium were doubly encapsulated, and the capsules were placed in interim pool storage pending final disposal.

The WESF is located in the 200 East Area of the approximately 1,450-square-kilometer (560-square-mile) semiarid Hanford Site in the southeastern portion of the State of Washington (Figure 3). The 200 East Area is approximately 10 kilometers (6 miles) west of the Columbia River, the nearest natural watercourse. The nearest population center is the City of Richland, approximately 32 kilometers (20 miles) to the south. The City of Richland has a population of 32,315, while the population within an 80-kilometer (50-mile) radius of the 200 Areas is 375,860.

The Hanford Site has a mild climate with 15 to 18 centimeters (6 to 7 inches) of annual precipitation, and infrequent periods of high winds of up to 128-kilometers (80-miles) per hour. Tornadoes are extremely rare; no destructive tornadoes have occurred in the region surrounding the Hanford Site. The probability of a tornado hitting any given waste management unit on the Hanford Site is estimated at 1 chance in 100,000 during any given year. The region is categorized as one of low to moderate seismicity.

The 200 East Area is not located within a wetland or in a 100- or 500-year floodplain. No plants or animals on the federal list of "Endangered and Threatened Wildlife and Plants," (50 CFR 17) are found in the immediate vicinity of the WESF, nor would existing plant or animal species found on the Hanford Site be affected by the proposed action. The geology of the site, where the proposed actions would take place, is typical of the 200 East Area. The surface is veneered with loess and sand dunes of varying thickness, although the tank farms and the majority of the area between them is composed of a disturbed gravel layer. Under the surface layer, in ascending order, are basement rocks of undetermined origin, the Columbia River Basalt Group with intercalated sediments of the Ellensburg Formation, the Ringold Formation, the Plio-Pleistocene unit, and the Hanford Formation. The depth to groundwater for the 200 Areas is 75 meters (246 feet). Groundwater flow direction is generally in an easterly and southeasterly direction, toward the Columbia River. The proposed actions would not be expected to impact the climate, flora and fauna, air quality, geology, hydrology and/or water quality, land use, or the population (DOE 1987). General information regarding the Hanford Site may be found in the *Hanford Site National Environmental Policy Act (NEPA) Characterization* report (Cushing 1992).

The Hanford Site is known to be rich in cultural resources, and contains many well-preserved archaeological sites dating back to both prehistoric and historical periods. Over 10,000 years of human activity have left extensive archaeological deposits along the Columbia River shoreline and at well-watered inland sites. Archaeological deposits at the Hanford Site have been spared some of the severe disturbances that have befallen unprotected sites in the area. However, the proposed activities would occur in the 200 East Area, several miles from any natural water courses, and are not expected to impact sensitive archaeological resources. Further, the 200 East Area (including the WESF) has been previously disturbed over the past 50 years. No sensitive cultural resources in the area of the WESF have been identified, or are anticipated. No Cultural Resources Review would be conducted for the proposed action. Additional information regarding the cultural resources on the Hanford Site may be found in the *Hanford Cultural Resources Laboratory Annual Report for 1992* (PNL 1993a).

5.0 Environmental Impacts

The following sections present information on those potential environmental impacts that have been identified as a result of activities being proposed for the return of isotope capsules to the Hanford Site. There are uncertainties and risks associated with even the most routine handling operations. However, the proposed return of isotope capsules is not expected to result in any additional radiological or hazardous material releases to the environment. All activities would comply with current DOE orders, and state and federal regulations.

Additionally, it is expected that personnel exposure to both radiation and hazardous materials during routine cask loading operations at IOTECH, ARECO, and PNL would be no greater than existing monitoring conditions at those facilities, and less than the low exposure currently experienced by the WESF personnel monitoring the existing, larger WESF capsule inventory. The facilities have appropriate procedures in place to ensure minimum exposure to radiation and hazardous materials (in keeping with As Low As Reasonably Achievable principles) and maximum employee and public safety. Impacts associated with both routine operations and accidents at PNL would be bounded by those described in the following sections for commercial facilities and the WESF.

5.1 Proposed Actions: Impacts from Routine Operations

5.1.1 Capsule Packaging and Storage at the Waste Encapsulation and Storage Facility Storage

The potential for release of radioactive emissions during packaging and the WESF storage of isotope capsules exists. However, appropriate controls would be in place in order to maintain radioactive personnel exposure well below DOE guidelines (5,000 millirem per year), in keeping with As Low As Reasonably Achievable principles. Additionally, appropriate procedures and administrative controls (e.g., personnel training and a Radiation Work Permit) would be in place prior to any proposed activities. Also, radiation and hazardous chemical worker exposure levels would be monitored during the proposed actions (i.e., personal dosimeters and constant air monitors).

Some radiological exposure would be expected for the workers involved in the proposed packaging, and WESF storage activities. Most of this exposure would be incurred while workers were in the immediate vicinity of the cask securing it to the truck. The anticipated worker exposure at commercial facilities (i.e., IOTECH and ARECO) during packaging would be low. Sufficient shielding is provided by cask design parameters to limit exposure to workers. Specifically, the maximum expected whole body total dose for 14 workers at IOTECH, based on radiological mapping of the BUSS cask, would be 0.16 person-rem for the entire campaign. That is, the average dose to workers would be approximately 0.01 rem. The worker exposure at ARECO would be expected to be

approximately one-tenth of the potential exposure at IOTECH (i.e., 0.001 rem) because although the number of workers would be the same, two shipments would be required from ARECO, compared with approximately 20 from IOTECH. Average occupational external exposure to workers during storage operations of capsules received at the WESF, is not expected to be greater than the average annual exposure to radiation by Hanford Site WESF workers from ongoing WESF activities. Average occupational external exposure to workers in the WESF due to routine operations in CY 1993 was immeasurable (i.e., zero), which is substantially less than the maximum allowable exposure of 5,000 millirem per year. Therefore, continued operations, based on a dose-to-risk conversion factors of 4.0×10^{-4} (onsite) latent cancer fatalities (LCF) per person-rem (56 FR 23363), no LCFs per year would be expected to result from the proposed packaging and storage. It is most likely that no cancer fatalities would be induced by the proposed action while capsules are awaiting final disposal. It is anticipated that routine operations would not provide additional exposure of toxic or noxious vapors to workers.

Also, no public exposure to radiation above that currently experienced from current commercial facilities or Hanford Site operations is anticipated as a result of these actions. That is, as reported in the *Hanford Site Environmental Report 1992,* (PNL 1993b), the potential dose to the hypothetical offsite maximally exposed individual during CY 1992 from Hanford Site operations was 0.02 millirem. The potential dose to the local population of 380,000 persons from 1992 operations was 0.8 person-rem. The 1992 average dose to the population was 0.002 millirem per person. The current DOE radiation limit for an individual member of the public is 100 millirem per year, and the national average dose fro natural sources is 300 millirem per year. No adverse health effects are expected to result from these low doses.

Small quantities of hazardous materials (e.g., solvents, cleaning agents), which may be generated during the proposed actions at the respective locations, would be managed and disposed of in accordance with applicable federal and state regulations.

The materials generated at the WESF would be managed according to applicable DOE guidelines and Hanford Site procedures. Radioactive material, radioactively-contaminated equipment, and radioactive mixed wastes at the WESF would continue to be appropriately packaged, stored, and disposed of at existing facilities on the Hanford Site. None of the materials are anticipated to be generated in substantial quantities when compared to the annual amount routinely generated throughout the Hanford Site. For example, during CY 1992, 23,800 cubic meters (840,489 cubic feet) of low-level nonindustrial waste was received for disposal and/or storage in the 200 Areas (WHC 1993).

Noise levels would be comparable to existing conditions at all facilities (i.e., IOTECH, ARECO, and the WESF). The amount of equipment and materials to be used, such as fuel for transportation and re-encapsulation, represent a minor long-term commitment of nonrenewable resources.

5.1.2 Transportation

This section addresses the impacts of incident-free (routine) transport of radioactive materials, in which the shipments reach their destinations without incident. The approaches and data that were used to calculate these impacts are detailed in Appendix B, as well as the characteristics of the radioactive shipments that are important to determining the radiological impacts. This section presents the results of the RADTRAN 4 input parameters and assumptions (Neuhauser 1992).

5.1.2.1 RADTRAN 4. The RADTRAN 4 computer code yields conservative estimates of radiological exposure to workers and the public (Neuhauser 1992). The conservatism comes from the assumptions which are made in selecting data in the program itself; for example, in the absence of actual measurements, the highest allowable external radiation level for a package (under transportation regulations) were used. In practice, shielding and packaging arrangements reduce this below the assumed level by a factor of 10.

5.1.2.2 Potential Impacts. The shipment characteristics necessary to calculate the radiological impacts of transport include the type of transportation packaging or "cask," the number of shipments, and the quantity of radioactive material within the cask (referred to as the 'inventory'). These parameters are presented in Appendix B for the transportation packaging considered in this study. Some of the information also is used in the analysis of transportation accidents, which is analyzed in Section 5.2, and detailed in Appendix B.

The proposed shipping casks, which would be used for the capsule shipments, are the Beneficial Uses Shipping System (BUSS) cask and the General Electric (GE) 2000 cask. Both casks are certified Type B shipping containers, meeting applicable regulatory requirements discussed in Section 6.2. The BUSS cask is a "special form" package as defined in 10 CFR 71 and 49 CFR 173. This means that the cask would provide shielding and confinement (i.e., acting as a structural barrier to prevent the capsules from being ejected in the event of an accident. The capsule itself is qualified as special form material (per 10 CFR 71 and 49 CFR 173, which assures that no radioactive material releases to the environment would occur in the event of an accident.

The GE 2000 cask is a "normal form" package. In addition to providing shielding and acting as a structural barrier (i.e., confinement), the GE 2000 also remains leak-tight under postulated accident conditions. Therefore, the GE 2000 provides shielding and containment, as defined in 10 CFR 71 and 49 CFR. Thus, the differences between the BUSS and the GE 2000 casks are the design properties which provide a higher degree of performance for control (i.e., confinement for the former, versus containment for the latter) of radiological releases during postulated accident conditions. The following RADTRAN analysis is based on the BUSS cask specifications, which provide a more conservative evaluation of potential environmental impacts.

Radiological impacts during normal transport involve dose to the public from radiation emitted by radioactive material packages as the shipment passes by, and to transport workers who are in the general vicinity of a radioactive material shipment. Even though radiation shields are incorporated into packaging designs (if required by regulations), some radiation penetrates the package and exposes the nearby population to an extremely low dose rate. After the shipment has passed, no further exposure occurs.

The groups exposed to radiation while the shipments are in-transit include truck drivers, those who directly handle radioactive shipments while they are in route, and the general public (e.g., bystanders at truck stops, persons living or working along a route, and nearby travelers (moving in the same and opposite directions). The RADTRAN 4 computer code (Neuhauser 1992) was used to calculate exposures during highway transport to these population groups.

The total dose to truck crews (workers) amounts to about 0.4 person-rem for all of the shipments. Total public doses were calculated to about 6 person-rem, predominantly from exposures received during truck stops. There are no excess LCFs predicted to result from routine doses from the cesium capsule shipments. These effects were calculated based on the RADTRAN input detailed in Appendix B. Specifics such as number of workers (2), persons exposed during stops (50), and average exposure during stops (14 millirem per hour at 1 meter [3.3 feet] from the cask) are provided in Appendix B, Table B-5. These effects are similar to those reported in the HDW-EIS for transportation of the capsules from the Hanford Site to an hypothetical offsite repository for disposal (Appendix I, Table I.10). Specifically 0.39 person-rem for the dose to crew, and total dose of 0.80 person-rem.

Circumstances which could effect the selected route (e.g., road closures, detours, unanticipated inclement weather) are not expected to result in increased risk to the worker or public during transportation of the isotope capsules. Should such events occur, appropriate procedures would be in place to mitigate additional travel times, public concern, and corresponding potential radiation exposure. Such mitigation actions may include highway escorts, traffic control, and appropriate supplemental public notification.

To place the exposures and health effects in perspective, a comparison was made to natural background exposures received by the same population affected by the cesium shipments. Natural background exposures were calculated for the exposed population along the route from the IOTECH Facility in Colorado to the Hanford Site. According to the National Council on Radiation Protection and Measurements (NCRP 1987), the average annual natural background exposure in the United States is about 300 millirem per year. The resulting average annual radiation dose from natural background radiation to the exposed population between IOTECH and the Hanford Site was calculated to be 1,500 person-rem per year. Using the appropriate health effects conversion factors addressed earlier, the resulting health effects were calculated to be 0.75 LCFs. The radiation doses from the IOTECH cesium capsule shipments amount to about 0.3 percent of the total annual dose from natural background radiation in the same population. It is expected that the aforementioned consequences would bound those anticipated for shipments from Virginia to the WESF.

5.2 Proposed Actions: Impacts from Accidents

5.2.1 Capsule Handling and Storage

Postulated accidents associated with the handling and storage of WESF isotope capsules have been previously analyzed in the HDW-EIS and the *Potential Radiological Impacts of Upper-Bound Operational Accidents During Proposed Disposal Alternatives for Hanford Defense Waste* (PNL 1986). The events included high consequence/low probability scenarios, as well as low consequence/high probability scenarios.

Accident scenarios included capsule rupture, a drop of a capsule in a basin, cover drop, hydrogen accumulation and explosion, loss of filtration, fire loss of services or power, and a capsule failure in the basin (PNL 1986, DOE 1987). It would be expected that the onsite consequences of such events at the commercial facilities would be no greater than postulated for the WESF. Due to the location of the commercial facilities (i.e., industrial section of urban area), potential exposure to the public would be greater by as much as several orders of magnitude. However, the probability of accidents during packaging is extremely low. Coupled with the enhanced awareness of public concern for the proposed action, the potential risks of the proposed action to affect the public are considered small.

The most serious postulated event analyzed for continued wet-storage WESF operations (PNL 1986, DOE 1987) was a rupture of a strontium capsule by improper handling during retrieval operations (a similar scenario involving a cesium capsule would be expected to be bounded by the postulated strontium capsule event). The resultant calculated total-body radiation doses are as shown in Table 1. Based on those doses, and a dose-to-risk conversion factor of 5.0×10^{-4} (offsite) LCFs per person-rem (56 FR 23363), LCFs also are shown in the Table 1.

Table 1.
Strontium Capsule Rupture Consequences.

Maximum Exposed Individual		Population Commitments	
1-Year Dose	70-Year Commitment	1-Year Dose	70-Year Commitment
2×10^{-7} rem	3×10^{-6} rem	6×10^{-4} rem	1×10^{-2} rem
1×10^{-10} LCFs	2×10^{-9} LCFs	3×10^{-7} LCFs	5×10^{-6} LCFs

Onsite worker consequences were not reported in the HDW-EIS, but would be expected to be several orders of magnitude higher. However, as shown by the offsite consequences, even several orders of magnitude would result in no LCFs associated with this most serious postulated event. Therefore, although the consequences of such an event were not analyzed, the overall risk associated with a capsule rupture would continue to be small.

5.2.2 Transportation

The impacts associated with potential transportation accidents are expressed as risk. For this analysis, risk is defined as the product of the probability of occurrence of an accident involving the cesium shipments and the consequences of an accident. Consequences are expressed in terms of the health effects from a release of cesium-137 from the packaging or the exposure of persons to radiation that could result from damaged package shielding. Details are provided in Appendix B.

The Maximum Credible Accident associated with the BUSS cask would not result in a breach of confinement (SNL 1991). The response of the BUSS cask to severe accident scenarios has been evaluated (SNL 1991). The accident scenario evaluated in SNL 1991, referred to as the hypothetical accident conditions of transport, were taken from 10 CFR 71. The hypothetical accident conditions include a 9-meter (30-foot) drop onto an essentially unyielding surface, followed by exposure to an 800 °C (1,475 °F) fire for 30 minutes (puncture and water immersion environments are also included). These conditions are equivalent to a 48 kilometer (30 mile) per hour collision with an unyielding target (e.g., a bridge abutment), followed by exposure to an engulfing jet fuel fire for 30 minutes. Over 99 percent of all highway accidents involve mechanical and thermal conditions less severe than the hypothetical accident conditions defined in 10 CFR 71 (Fischer 1987). Therefore a release of radioactive material is unlikely to occur. The Maximum Credible Accident, defined here as one having a frequency greater than or equal to 1×10^{-6} per year, is represented by a Severity Category 3 (Appendix B has definitions of Severity Categories). This Severity Category represents postulated accident conditions more severe than the 10 CFR 71 hypothetical accident conditions. The Maximum Credible Accident was estimated to be a 74 kilometer (46 miles) per hour impact onto a hard rock surface followed by exposure to an 800 °C (1,475 °F) fire for 30 minutes (Fisher 1987). It is anticipated that no release of radioactive material from the BUSS cask to the environment would occur when subjected to postulated accident conditions represented by Severity Category 3 (Appendix B). The impact analysis detailed in Appendix B included impact velocities as high as 340 kilometers (150 miles) per hour and exposure to an 800 °C (1,475 °F) fire for over 3 hours. The probabilities and consequences of encountering accident conditions over this Accident Severity range were factored into the transportation environmental impact calculations.

However, for conservatism, the following noncredible event (Appendix B) was analyzed. A release of radioactive material could occur only if the transport packaging and capsules were to become breached. A breach most likely would be a small gap in a seal or small split in the cask or capsule. For the radioactive material to reach the environment, it would have to become released from the material form, pass through the breach in the capsule, and then through the breach in the cask. The RADTRAN 4 computer code was used to calculate the radiological impacts of transportation accidents involving cesium capsule shipments.

The results indicate that the total transportation impacts from postulated accidents during the return shipments of cesium capsules are about 2.0 x 10^{-4} person-rem. This equates to about 1.0 x 10^{-7} LCFs. The total impacts are dominated by the shipments from IOTECH primarily because there are 10 times more shipments from IOTECH than ARECO. However, this difference is somewhat offset by the longer shipping distance from ARECO (about 1,800 kilometers [1,100 miles] from IOTECH to the WESF compared to 4,200 kilometers [2,600 miles] from ARECO). The impacts of the cesium shipments from PNL are inconsequential relative to IOTECH and ARECO because there are only three shipments, and the shipping distance from PNL is very short relative to the IOTECH and ARECO shipments.

5.3 Proposed Action: Cumulative Impacts

The proposed action would be similar to existing activities associated with Hanford Site operations which occur daily (i.e., packaging, transport and storage of radioactive materials), and those activities associated with initial operation of the commercial facilities. As stated in Sections 5.1.1 and 5.1.2.2, no LCFs would be expected to workers or the general public as a result of the proposed action. The proposed actions also would mitigate the potential for, and consequences of, inadvertent releases of radioactive and hazardous materials at commercial facilities.

Further, the risks associated with routine transportation of cesium capsules are very small, and the radiation exposure to workers and members of the public is extremely low, (far less than from natural background radiation).

This page intentionally left blank.

6.0 Permits and Regulatory Requirements

6.1 Facility Compliance

It is the policy of the DOE to carry out its operations in compliance with all applicable federal, state, and local laws and regulations. Facilities on the Hanford Site, including the WESF, operate in compliance with National Ambient Air Quality Standards (*Clean Air Act of 1977*, U.S. Environmental Protection Agency). Hanford Site radioactive stacks, including those at the WESF, have been registered with the State of Washington Department of Health (DOH), Office of Radiation Protection. The DOH has issued a radioactive air emissions for the Hanford Site. No additional air emission permits would be required for the proposed action.

All generated solid wastes would be handled in a manner compliant with applicable federal and state regulations and DOE orders. For example, requirements include *Washington Administrative Code* 173-303, "Dangerous Waste Regulations," and DOE Order 5820.2A, *Radioactive Waste Management*.

The commercial facilities similarly comply with applicable air discharge and solid waste requirements. Additionally, commercial irradiation facilities are subject to applicable NRC requirements under 10 CFR 20, "Standards for Protection Against Radiation," 10 CFR 30, "Rules of General Applicability to Domestic Licensing of Byproduct Material," and 10 CFR 36, "Licensing of Commercial Irradiators."

6.2 Transportation Requirements

The loading and transportation of cesium and strontium capsules to the WESF will comply with the regulations and orders promulgated by the DOE, DOT and NRC. These agencies have developed comprehensive regulations covering the performance of the shipping packaging, vehicle safety, routing of shipments, and physical protection.

The proposed shipping casks to be used for the capsule shipments are referred to as the BUSS cask and the GE 2000 cask. These casks are certified Type B shipping containers that may be used for Highway Route Controlled Quantity shipments of nonfissile radioactive material. The casks meet the requirements of 10 CFR 71, and 49 CFR 173.

This page intentionally left blank.

8.0 References

10 CFR 20, 1993, "Standards for Protection Against Radiation," *Code of Federal Regulations,* as amended.

10 CFR 30, 1993, "Rules for General Applicability to Domestic Licensing of Byproduct Material," *Code of Federal Regulations,* as amended.

10 CFR 36, 1994, "Licensing of Commercial Irradiators," *Code of Federal Regulations,* as amended.

10 CFR 71, 1993, "Packaging & Transportation of Radioactive Material," *Code of Federal Regulations,* as amended.

10 CFR Part 71.75, 1993, "Qualification of Special Form Radioactive Material," *Code of Federal Regulations,* as amended.

49 CFR 107, 1993, "Hazardous Materials Program Procedures," *Code of Federal Regulations,* as amended.

49 CFR 171, 1993, "General Information, Regulations, and Definitions," *Code of Federal Regulations,* as amended.

49 CFR 172, 1993, "Hazardous Materials Tables and Hazardous Materials Communications Regulations," *Code of Federal Regulations,* as amended.

49 CFR 173, 1993, "Shippers - General Requirements for Shipments and Packagings," *Code of Federal Regulations,* as amended.

49 CFR 177, 1993, "Carriage by Public Highway," *Code of Federal Regulations,* as amended.

49 CFR 178, 1993, "Shipping Container Specification," *Code of Federal Regulations,* as amended.

50 CFR 17, 1992, "Endangered and Threatened Wildlife and Plants," *Code of Federal Regulations*, as amended.

54 FR 12440, 1988, "Disposal of Hanford Defense High-Level, Transuranic and Tank Wastes, Hanford Site, Richland, Washington; Record of Decision," *Federal Register,* April 14.

56 FR 23360, 1991, "Nuclear Regulatory Commission, Preamble to Standards for Protection Against Radiation," *Federal Register*, May 21.

Brandes, E. A. and G. B. Brook, 1985, *Smithells Metals Reference Book*, Seventh Edition, Butterworth, Heinman Company, Boston, Massachusetts.

Clean Air Act of 1977, as amended, 42 U.S.C. 7401 et seq.

Cushing, C. E., ed., 1992, *Hanford Site National Environmental Policy Act (NEPA) Characterization*, PNL-6415, Rev. 5, Pacific Northwest Laboratory, Richland, Washington.

DOE, 1987, *Final Environmental Impact Statement: Disposal of Hanford Defense High-Level, Transuranic and Tank Wastes, Hanford Site, Richland, Washington*, 5 vols, DOE/EIS-0113, U.S. Department of Energy, Washington, D.C.

DOE, 1988a, *External Dose Rate Conversion Factors for Calculation of Dose to the Public*, DOE/EH-0070, U.S. Department of Energy, Washington, D.C.

DOE, 1988b, *Internal Dose Conversion Factors for Calculation of Dose to the Public*, DOE/EH-0071, U.S. Department of Energy, Washington, D.C.

DOE, 1988c, *Radioactive Waste Management*, DOE Order 5820.2A, U.S. Department of Energy, Washington, D.C.

DOE, 1989, *General Design Criteria*, DOE Order 6430.1A, U.S. Department of Energy, Washington, D.C.

DOT, 1992, *National Transportation Statistics, Annual Report for 1992*, DOT-VNTSC-RSPA-92-1, U.S. Department of Transportation, Washington, D.C.

Dunning, D. D., 1983, *Estimates of Internal Dose Equivalent from Inhalation and Ingestion of Selected Radionuclides*, WIPP/DOE-176, U.S. Department of Energy, Washington D.C.

Einziger, R. E. and J. A. Cook, 1984, *LWR Spent Fuel Dry Storage Behavior at 229°C*, NUREG/CR-3708, Hanford Engineering Development Laboratory, Richland, Washington.

Elder, H. K. et al., 1978, *An Assessment of the Risk of Transporting Spent Nuclear Fuel By Truck*, PNL-2588, Pacific Northwest Laboratory, Richland, Washington.

ERDA, 1975, *Final Environmental Statement: Waste Management Operations, Hanford Reservation, Richland, Washington*, 2 vols., ERDA-1538, U.S. Energy Research and Development Administration, Washington, D.C.

Fischer, L. F., 1987, *Shipping Container Response to Severe Highway and Railway Accident Conditions*, NUREG/CR-4829, U.S. Nuclear Regulatory Commission, Washington, D.C.

GE, 1984, *Model 2000 Radioactive Material Transport Package Safety Analysis Report*, NEDO-30778, General Electric Company, Pleasanton, California.

ICRP, 1983, *Radionuclide Transformation, Energy, and Intensity of Emissions*, Publication 38, International Commission on Radiological Protection, Pergammon Press, Oxford.

ICRP, 1991, *Annals of the ICRP*, Publication 60, International Commission on Radiological Protection, Elmsford, New York.

Joy, D. S. and P. E. Johnson, 1983, *HIGHWAY, A Transportation Routing Model: Program Description and Revised User's Manual*, ORNL/TM-8759, Oak Ridge National Laboratory, Oak Ridge, Tennessee.

Kenna, B. T., 1984, *WESF Cs-137 Gamma Ray Sources*, SAND82-1492, Sandia National Laboratories, Albuquerque, New Mexico.

Lorenz, R. A. et al., 1980, *Fission Product Release from Highly Irradiated LWR Fuel*, NUREG.CR-0722, Oak Ridge National Laboratory, Oak Ridge, Tennessee.

Madsen, M. M., et al., 1983, *RADTRAN II User's Guide*, SAND82-2681, Sandia National Laboratories, Albuquerque, New Mexico.

Madsen, M. M., et al., 1986, *RADTRAN III*, SAND84-0036, Sandia National Laboratories, Albuquerque, New Mexico.

NCHS, 1988, *Vital Statistics of the United States 1985, Volume II - Mortality*, National Center for Health Statistics, U.S. Department of Health and Human Services, Hyatsville, Maryland.

National Environmental Policy Act of 1969, 42 U.S.C. 4321 et seq.

NCRP, 1987, *Exposure of the Population in the United States and Canada from Natural Background Radiation*, Report No. 94, National Council on Radiological Protection and Measurements, Bethesda, Maryland.

Neuhasuer, K. S. and P. C. Reardon, 1986, *A Demonstration Sensitivity Analysis for RADTRAN III*, SAND85-1001, Sandia National Laboratories, Albuquerque, New Mexico.

Neuhauser, K. S. and F. L. Kanipe, 1992, *RADTRAN 4: Volume 3 -- User Guide*, SAND89-2370, Sandia National Laboratories, Albuquerque, New Mexico.

PNL, 1986, *Potential Radiological Impacts of Upper-Bound Operational Accidents During Proposed Disposal Alternatives for Hanford Defense Waste*, PNL-5356, Pacific Northwest Laboratory, Richland, Washington.

PNL, 1993a, *Hanford Cultural Resources Laboratory Annual Report 1992*, PNL-8676, Pacific Northwest Laboratory, Richland, Washington.

PNL, 1993b, *Hanford Site Environmental Report 1992*, PNL-8682, Pacific Northwest Laboratory, Richland, Washington.

Sanders, T. L. et al., 1992, *A Method For Determining the Spent Fuel Contribution to Transport Cask Containment Requirements*, SAND90-2406, Sandia National Laboratories, Albuquerque, New Mexico.

SNL, 1991, *Beneficial Uses Shipping System (BUSS) Cask Safety Analysis Report for Packaging (SARP)*, Rev. 3., SAND83-0698, Sandia National Laboratories, Albuquerque, New Mexico.

Taylor, J. M. and S. L. Daniel, 1982, *RADTRAN II: A Revised Computer Code To Analyze Transportation of Radioactive Material*, SAND80-1943, Sandia National Laboratories, Albuquerque, New Mexico.

Tingey, G. L., 1985, *WESF Cesium Capsule Behavior at High Temperature or During Thermal Cycling*, PNL-5517, Pacific Northwest Laboratory, Richland, Washington.

WAC 173-303, 1990, "Dangerous Waste Regulations," *Washington Administrative Code*, as amended.

WHC, 1993, *Summary of Radioactive Solid Waste Received in the 200 Areas During Calendar Year 1992*, WHC-EP-0125-5, Westinghouse Hanford Company, Richland, Washington.

Wilmot, E. L., 1981, *Transportation Accident Scenarios for Commercial Spent Fuel*, SAND80-2124, Sandia National Laboratories, Albuquerque, New Mexico.

9513384.1885

Figures

This page intentionally left blank.

9513384.1886

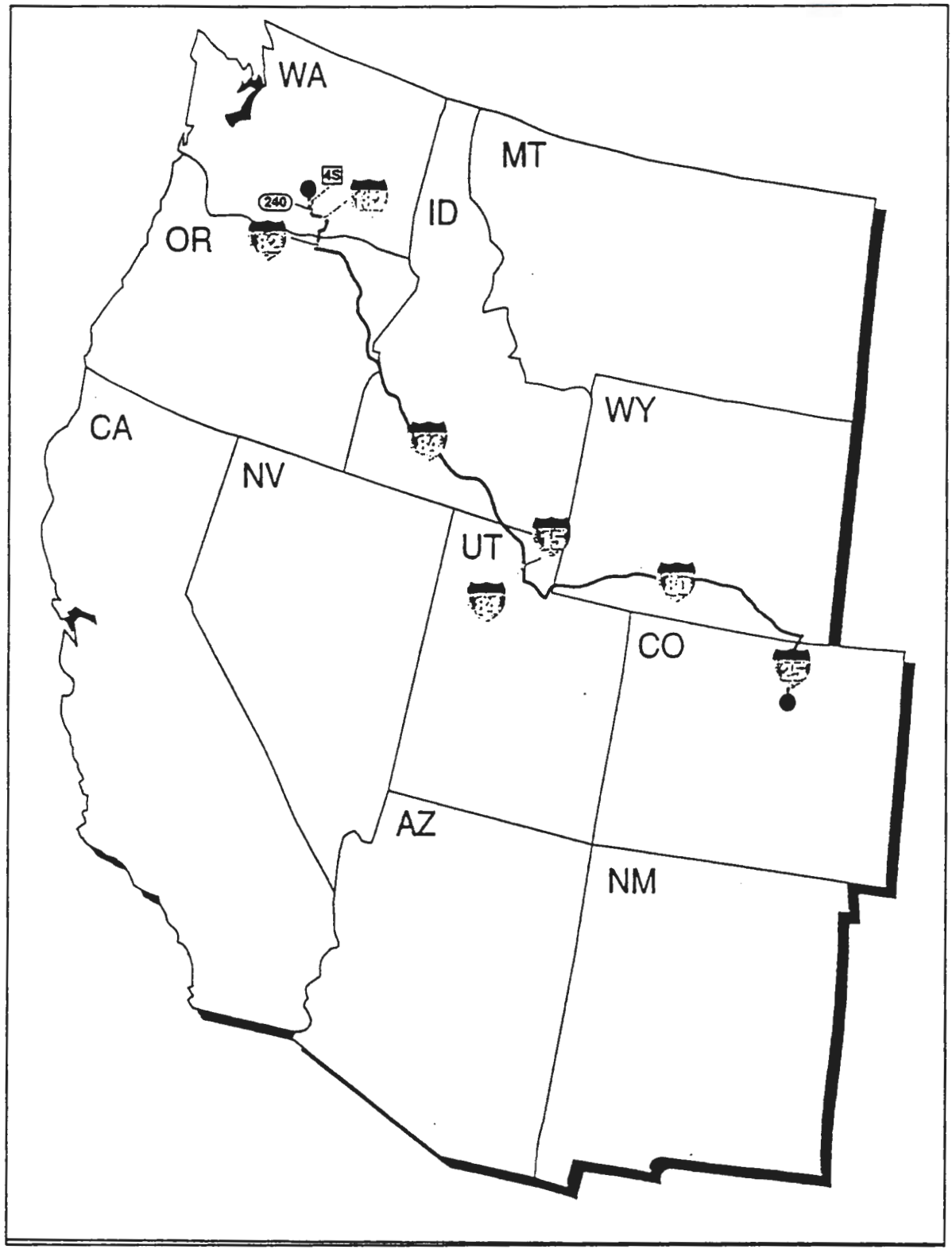

Figure 1. Proposed Isotope Capsule Shipment Route from Colorado.

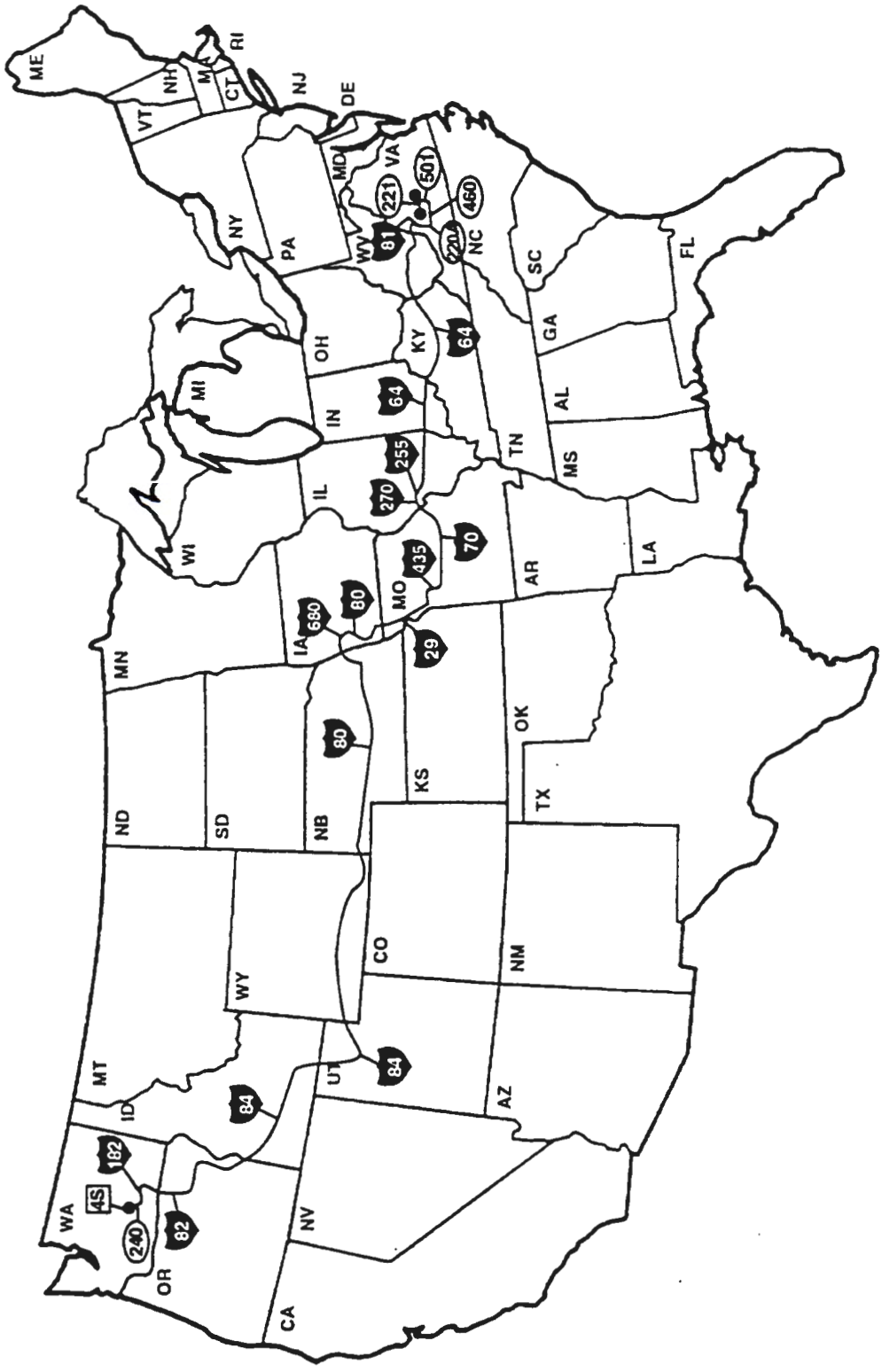

Figure 2. Proposed Isotope Capsule Shipment Route from Virginia.

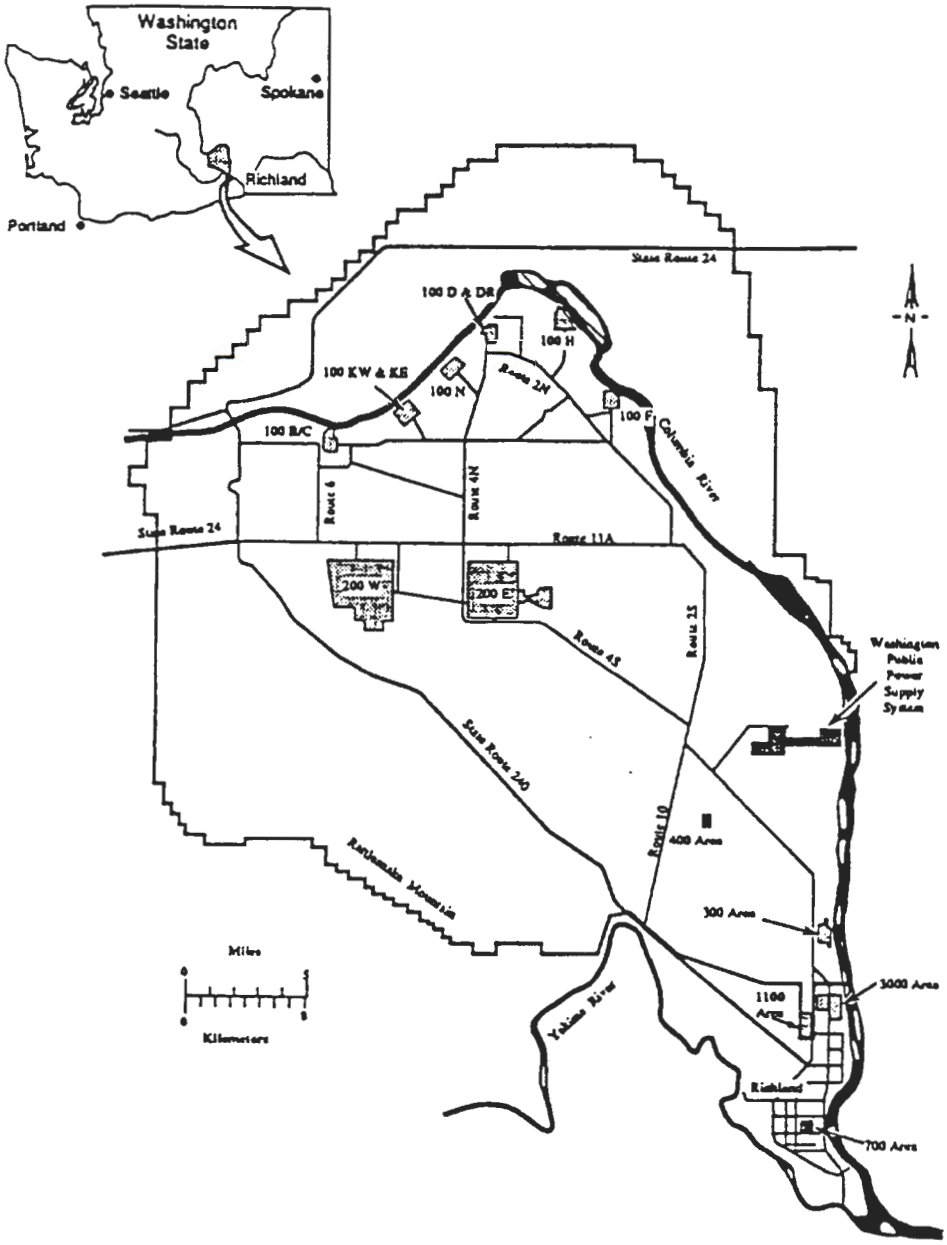

Figure 3.
Hanford Site.

This page intentionally left blank.

United States Government

Department of Energy

memorandum

Date: September 26, 1990

SECRETARIAL ACTION REQUESTED BY:

Orig. Office: NE-1 (NE-48)

Transmittal: ACTION: Recommendations Concerning Encapsulated Cesium-137 (Cs-137) Radiation Sources and Future Utilization of Cs-137

To: The Secretary

Through: The Deputy Secretary

Issue: The disposition of Cs-137 sources under lease and definition of the appropriate level of effort to determine the cause of source failure.

Discussion: Waste Encapsulation and Storage Facility (WESF) capsules containing Cs-137 chloride, originally designed for long-term waste storage, were qualified for licensing as radiation sources and offered to industry under a Department of Energy (DOE) lease program. One of the capsules, leased to Radiation Sterilizers, Incorporated (RSI), failed in June 1988 after 2 years' service, seriously contaminating the plant. Under DOE management, the failed capsule was identified, isolated, and removed to an Oak Ridge National Laboratory (ORNL) facility for destructive examination. Subsequently, DOE ordered closure of the examination facility necessitating transfer of the capsule to Richland where studies of the failure mode are continuing. RSI and a second lessee, IOTECH, Incorporated, have instituted Administrative Claims for financial losses resulting from the incident. The interim findings of a DOE Investigation Board strongly questions the prudence of continued use of the WESF capsules as industrial radiation sources.

There is continued interest in using Cs-137 as a radiation source. The French Commissariat a l'Energie Atomique (CEA) is prepared to share with DOE technology for a new, improved Cs-137 form in exchange for delivery of 18 WESF capsules.

Recommendation: Approve the two recommendations in the attached Action Memorandum.

A. Offer to take back all WESF capsules now in commercial use. Ship them to Hanford at DOE expense (Office of Environmental Restoration and Waste Management budget), and complete the destructive analysis of the failed capsule and other selected capsules.

B. Complete the agreement with CEA-CIS Biointernational of France to provide up to 18 WESF capsules in exchange for new pollucite technology.

William H. Young
William H. Young
Assistant Secretary
for Nuclear Energy

Attachment

The attached correspondence has no relation to the Naval Nuclear Propulsion Program. Naval Reactors concurrence is not required.

Concurrence:	EH-1	GC-1
	Duffy	Wakefield
	9/20/90	9/6/90

This page intentionally left blank.

TRANSPORTATION IMPACT ANALYSIS

This appendix provides the information necessary to develop estimates of the radiological impacts of transportation of cesium and strontium capsules from their current offsite locations to the Hanford Site. This appendix addresses the impacts of incident-free (routine) transport of radioactive materials in which the shipments reach their destinations without incident and the impacts of accidents involving the shipments. The approaches and data that were used to calculate these impacts are presented as well as the characteristics of the radioactive shipments that are important to determining the radiological impacts.

SHIPMENT CHARACTERISTICS

The shipment characteristics necessary to calculate the radiological impacts of onsite transport include the type of shipping container or "cask," the number of shipments, and the quantity of radioactive material within the cask (referred to as the 'inventory'). These parameters are presented in this section for the transportation packaging considered in this study.

Shipping Cask Description

The shipping casks to be used for the capsule shipments are referred to as the Beneficial Uses Shipping System (BUSS) cask and the General Electric (GE) 2000 cask (Figures B-1 and B-2, respectively). Both casks are certified Type B shipping containers that may be used for Highway Route Controlled Quantity shipments of nonfissile radioactive material. The BUSS cask is a "special form" package which provides shielding and confinement for radioactive materials. The GE 2000 cask is a "normal form" package, which provides shielding and containment, also for radioactive material. The differences between the two casks are the design properties of the GE 2000 cask, which provide a higher degree of performance for control (i.e., containment versus confinement) of radiological releases during accident conditions. The following discussion and analysis are based on the BUSS cask specifications, which provide a more conservative evaluation of potential environmental impacts. Specific details regarding the GE 2000 cask may be found in the *Model 2000 Radioactive Material Transport Package Safety Analysis Report* (GE 1984).

The BUSS cask meets the requirements of 10 *Code of Federal Regulations* (CFR) 71 and 49 CFR 173, as documented in the BUSS Cask Safety Analysis Report for Packaging (SNL 1991). Figure B-1 is an illustration of the BUSS cask. Important physical data for the BUSS cask are presented in Table B-1. Radioactive material limits are provided in Table B-2.

The BUSS cask is a one-piece, cylindrical forging with envelope dimensions of a 137.7-centimeter (54.25-inch) outside diameter by 124.5 centimeters (49 inches) long. The inner cavity measures 51.44 centimeters (20.25 inches) in diameter by 58.4 centimeters (23.0 inches) in length. Two penetrations into the cask cavity are provided; a 3.18-centimeter (1.25-inch) diameter port near the lid end and a diametrically-opposite identical drain port at the bottom of the cask cavity. The walls and closed end of the cask body are a minimum of 33 centimeters (13 inches) thick.

The cask lid is a one-piece forging that is 73.1 centimeters (27.78 inches)in diameter by 32.61 centimeters (12.84 inches) thick. Twelve 3.81-centimeter (1.5-inch) diameter bolts are used to attach the lid to the cask body. The cask lid and body are fabricated from Type 304 stainless steel. The lid and port seals consist of concentric double seals, one of copper and the other elastomeric. The inner cavity contains helium that is used as a coolant under normal transport conditions.

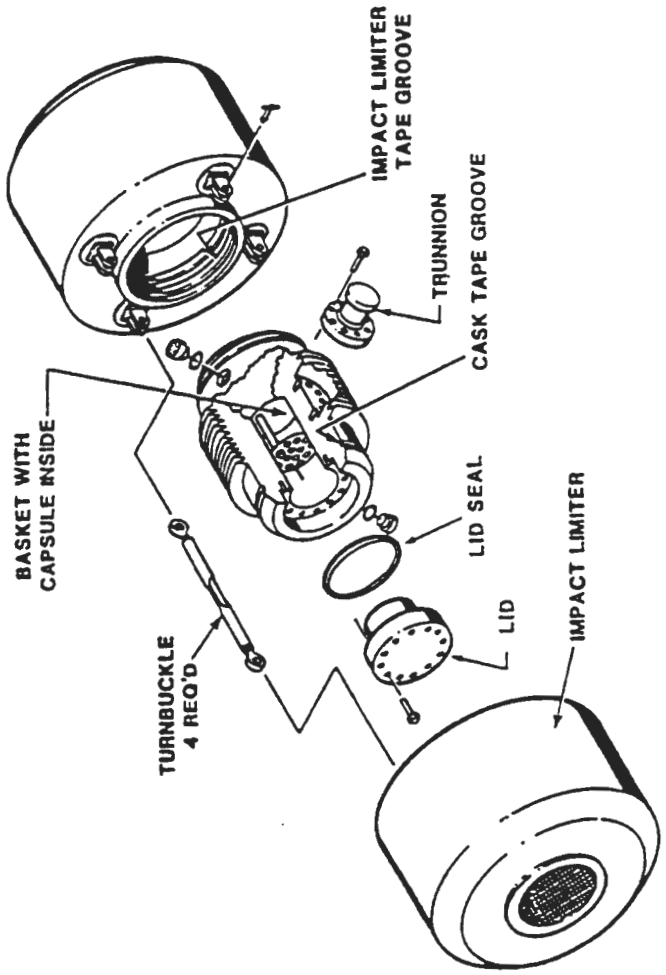

Figure B-1.
Illustration of the Beneficial Uses Shipping System Cask.

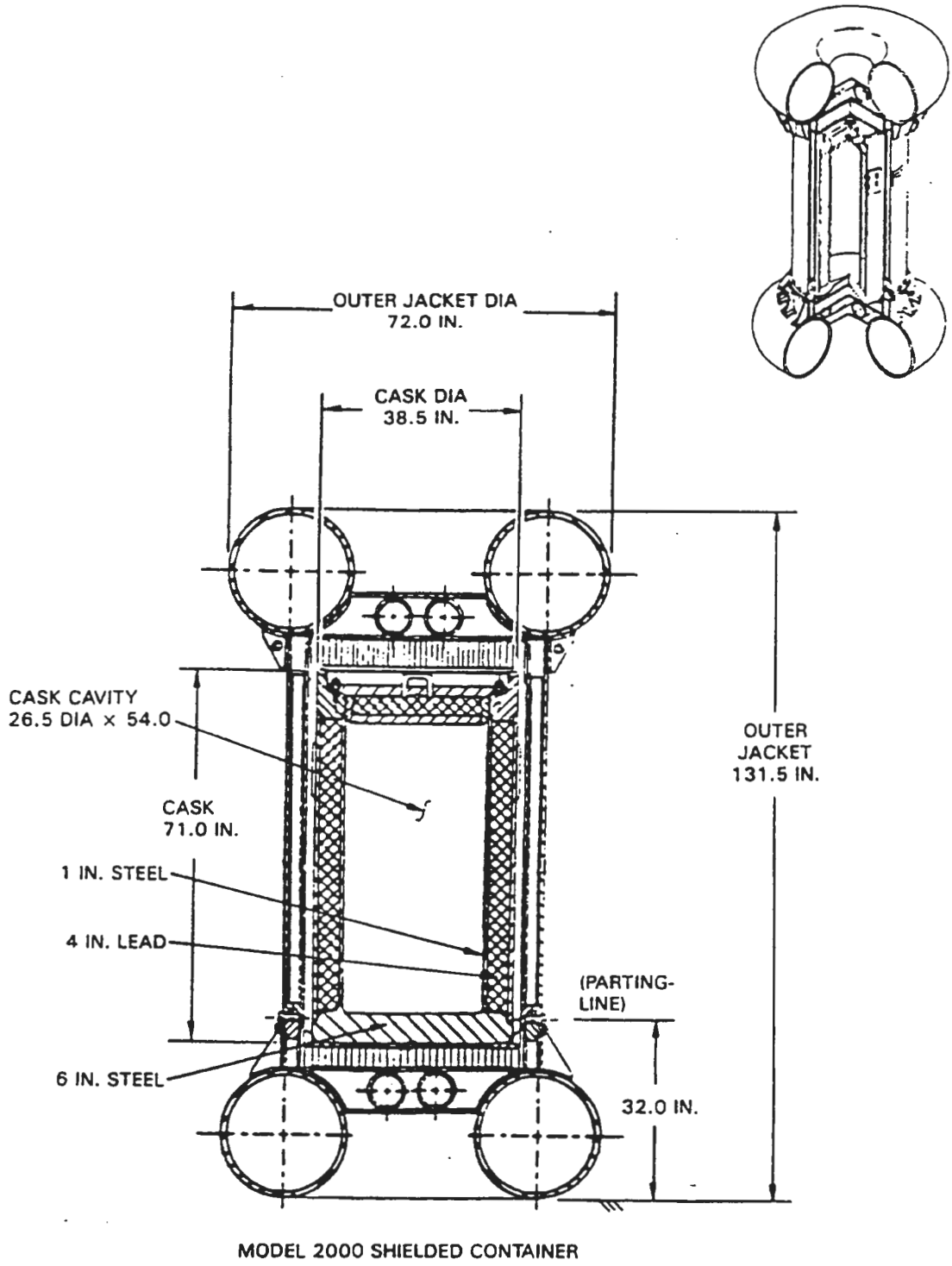

Figure B-2.
Illustration of the General Electric Model 2000 Cask.

Table B-1.
Physical Data for Beneficial Uses Shipping System Cask[a].

Component	Dimensions, centimeters	Estimated Weight, kilogram
Body and Lifting Attachments	137.8 diameter 124.5 long	9,300
Lid	73.1 diameter 32.61 long	680
Basket	50.67 diameter 75.98 long	730
Impact Limiters[b]	215.04 diameter 99.06 long	2,730
Personnel Barrier		140
Skid	186.7 long 227.6 wide 34.3 deep	1,230
Contents (Maximum)		185
Estimated Total Weight		14,995

(a) Source: BUSS Cask SARP (SNL 1991)
(b) Two impact limiters are required for shipment. Dimensions given are for one impact limiter; weight is for two.

Table B-2.
Beneficial Uses Shipping System Cask Radioactive Material Limits[a].

Basket	Allowable Capsule Type	Max. Thermal Power per Capsule, W	Max. Total Cask Thermal Power, kW	Max. Cask Activity,
16 hole	cesium	250	4.0	850
12 hole	cesium	333	4.0	850
6 hole	strontium	650	3.9	650
4 hole	strontium	850	3.4	560

(a) Source: (SNL 1991)
(b) The 16-hole configuration for cesium and six-hole configuration for strontium will be used for the return shipments to Hanford.

The BUSS cask contains inner baskets to hold the capsules in place during transport. The baskets are fabricated of Type 304 stainless steel. Holes are drilled into the basket to form receptacles for the capsules. Four different baskets are available for the BUSS cask; selection of the appropriate basket depends on the thermal power level of the capsules. A basket containing 16 capsule receptacles will be used for the cesium capsule shipments; a 6-position basket will be used for the strontium capsule shipments.

The BUSS cask is provided with impact limiters, one at each end of the cask, which provide protection from mechanical and thermal accident environments. The impact limiters are 84.66 inches (215 centimeters) in diameter and 39.0 inches (99.06 centimeters) long. The impact limiters are shells fabricated from Type 304 stainless steel sheet and filled with moderate-density polyurethane foam. The foam thickness is about 46 centimeters (18 inches) on the sides and 27 inches (68.6 centimeters) on the ends of the cask.

Capsule Description

The contents of the BUSS cask are WESF capsules of melt-cast cesium chloride or pressed-filled strontium fluoride (SNL 1991). The capsules are qualified as special form materials, per 10 CFR 71 and 47 CFR 173. A typical WESF capsule is illustrated in Figure B-3. As shown, the cesium chloride and strontium fluoride are double-encapsulated in welded-end cylinders. Both inner and outer cesium capsules are fabricated of Type 316L stainless steel. The inner strontium capsule is fabricated of Hastelloy®[1] Alloy C-276 alloy and the outer capsule is 316L stainless steel. Key physical description information for cesium capsules is presented in Table B-3 and for the strontium capsules in Table B-4. It is noted that there are approximately 1.3 centimeters (0.5 inches) of longitudinal space between the inner capsule and outer capsule (to allow for thermal expansion of the inner capsule).

Description of Capsule Shipping Campaign

This section provides information that is specifically applicable to the return shipments of cesium and strontium capsules to the Hanford Site. The information in this section includes the numbers of capsules, number of shipments from each origin facility, radionuclide inventories per shipment, and assumed radiation dose rates emitted from the shipping casks. These data are given below:

Numbers of Cesium Capsules. A total of 309 cesium capsules are currently located at the IOTECH Facility in Northglenn, Colorado, and 25 are located at ARECO in Lynchburg, Virginia. An additional 33 capsules are located at the Pacific Northwest Laboratory (PNL) near Richland, Washington. All of these capsules are to be returned to the Hanford Site.

Numbers of Strontium Capsules. A total of five strontium capsules are to be returned from the PNL. The four strontium capsules at the NTS are not part of this action.

Number of Shipments. The BUSS cask will be configured to transport 16 cesium capsules per shipment. Therefore, a total of 20 shipments are required from IOTECH two from ARECO, and three from the PNL facilities. The BUSS cask will be configured to transport up to six strontium capsules per shipment. Therefore, one partial shipment from PNL is needed to return the strontium capsules to the WESF.

[1]Hastelloy is a Registered Trade Mark of Cabot Corporation.

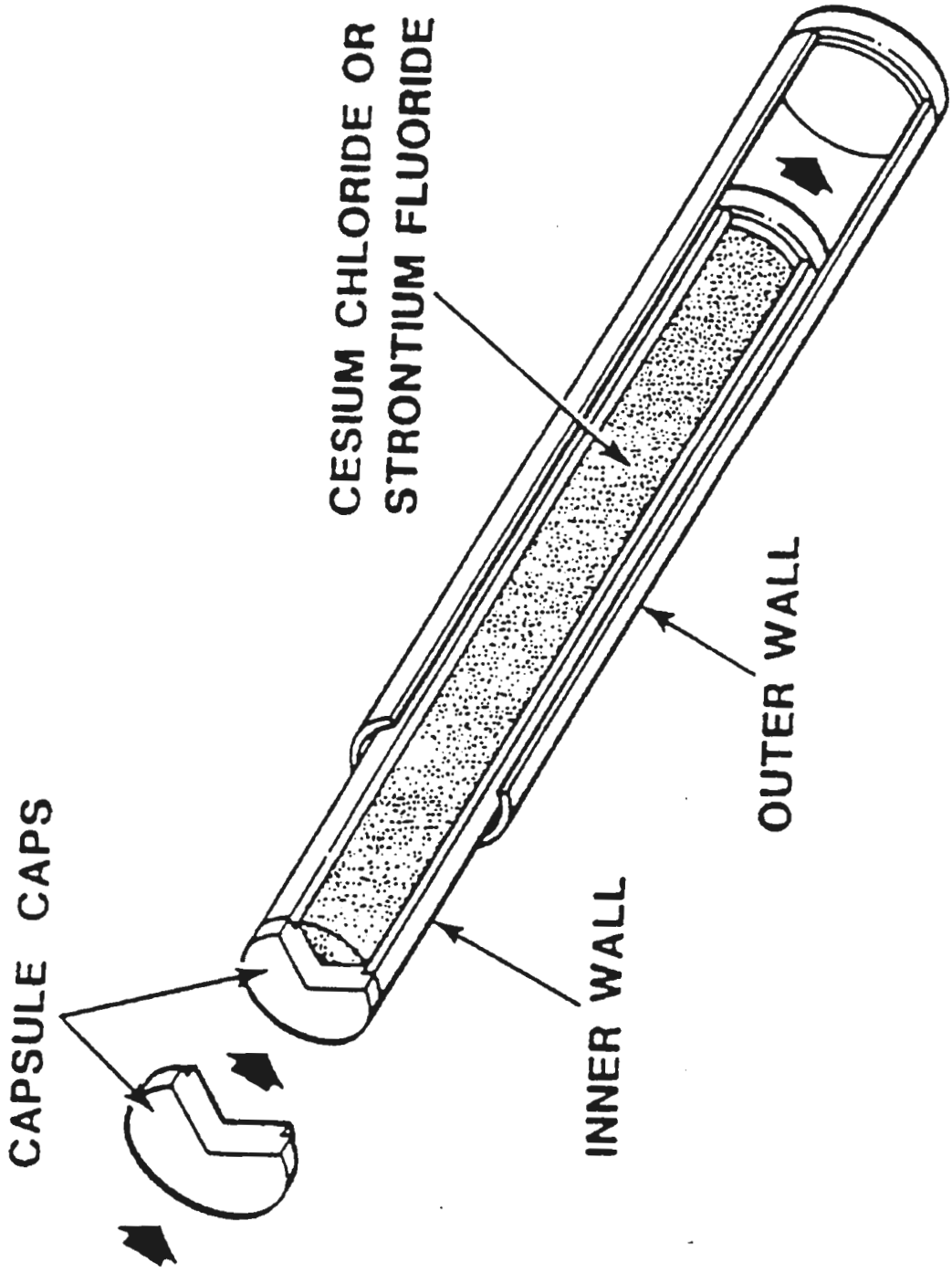

Figure B-3.
Illustration of the
Waste Encapsulation and Storage Facility Capsule.

Table B-3.
Physical Data on Cesium Capsules[a].

Property	Inner Capsule	Outer Capsule
Material	316L Stainless Steel	316L Stainless Steel
Inner Diameter, centimeters	5.024	5.977
Outer Diameter, centimeters	5.715	6.668
Total Length, centimeters	50.10	52.77
Cesium Chloride		
Quantity, kilograms	2.7	
Density, grams per centimeters^3	2.6	
Maximum Nominal Capsule Activity, curies of cesium-137	70,000	
Maximum Thermal Power, W	333	
Melting Point, °C	646	

(a) Source: BUSS Cask SARP (SNL 1991)

Table B-4.
Physical Data on Strontium Capsules[a].

Property	Inner Capsule	Outer Capsule
Material	Hastelloy® Alloy C-276	316L Stainless Steel
Inner Diameter, centimeters	5.11	6.07
Outer Diameter, centimeters	5.72	6.68
Total Length, centimeters	48.4	51.1
Strontium Fluoride		
Quantity, kg	2.8	
Density, grams per cubic centimeter	2.9	
Maximum Nominal Capsule Activity, curies of strontium-90	140,000	
Maximum Thermal Power, W	850	
Melting Point, °C	850 to 1,100 (depends on purity)	

(a) Source: BUSS Cask SARP (SNL 1991)

Cesium-137 Inventories. The cesium inventories were calculated on a per-capsule basis, decayed to January, 1994, for all of the cesium capsules at the IOTECH and ARECO facilities. The representative cask inventories of cesium-137 were derived by adding together the individual inventories from the 16 highest-loaded capsules. The results were: IOTECH - 723.7 kilocuries per shipment; ARECO: 674.91 kilocuries per shipment. The maximum inventory of the PNL capsules could be 748 kilocuries per shipment. However, for conservatism, considering the number of shipments and the distance traveled, the IOTECH inventory (i.e., 723.7 kilocuries per shipment) was used for impact analysis. All potential inventory values are well below the maximum allowable cask activity of 850 kilocuries per shipment.

Strontium Inventories. Return of the strontium capsules (approximately 175 kilocuries) will require one shipment from PNL. This actual inventory is well below the cask design limit for any one shipment of 650 kilocuries. However, for conservatism, the following bounding analysis used the NTS inventory (on a per-capsule basis, decayed to April, 1993) of 415 kilocuries per shipment.

Radiation Dose Rates. For this analysis, all shipments were assumed to be at the regulatory maximum dose rate defined in 49 CFR 173.441. The maximum dose rates are 200 millirem per hour at any point on the external surface of the car or vehicle (in a closed transport vehicle only) and 10 millirem per hour at any point 2 meters (6.5 feet) from the vertical planes projected by the outer lateral surfaces of the car or vehicle; or if the load is transported in an open transport vehicle, at any point 2 meters (6.5 inches) from the vertical planes projected from the outer edges of the vehicle.

TRANSPORTATION IMPACT ANALYSIS

The RADTRAN 4 computer code (Neuhauser 1992) was used to evaluate possible radiological impacts associated with the transportation of cesium and strontium capsules to Hanford. The program uses a combination of meteorological, demographic, health physics, transportation, packaging, and material factors to analyze risks associated with both normal transport (incident-free) and various user-selected accident scenarios. RADTRAN 4 is an update of the RADTRAN 3 (Madsen et al. 1986) and RADTRAN 2 (Taylor and Daniel 1982, Madsen et al. 1983) computer codes.

The RADTRAN 4 program consists of seven submodels (1) a material model that allows users to select basic material parameters including number of curies of each isotope per package, average total photon energy per disintegration, the rate at which released material is deposited on the ground, cloudshine dose factors, the physical character of the waste, half-life, and measures of the radiotoxicity of the dispersed material; (2) a transportation model that considers accident rates for each transportation mode (truck, van, rail, cargo and passenger air, barge, and ship), traffic patterns (fraction of travel occurring on various road types, through different population zones, and under both rush-hour and normal traffic conditions), and basic shipment information (number of crew per vehicle,

handling and storage times, duration and number of stops); (3) an accident severity and package release model that classifies accidents according to severity (i.e., fire; crush, impact, and puncture forces) and defines the respirable fraction (particles greater than 10 μm) of airborne material released from packages; (4) a meteorological dispersion model that describes the diffusion of a cloud of aerosolized debris released during an accident; (5) a population distribution model that describes the distribution and relative densities of people in three population zones (rural, suburban, and urban), and in certain specific areas, such as pedestrian walkways, warehouses, and air terminals; (6) a health effects model[2] that evaluates the radiotoxicity of materials in terms of potential for producing acute fatalities, early morbidities, genetic effects, and LCFs; and (7) an optional economic model that evaluates the economic impacts connected with surveillance, cleanup, evacuation, and long-term land-use denial activities.

The new features of RADTRAN 4 include the following;

- Ability to perform link-by-link route-specific analyses
- Addition of an internal radionuclide library
- Improved logic for multiple-radionuclide packages
- Allows for separate treatment of gamma and neutron exposures
- Allows definition of up to 20 accident severity categories

Perhaps the most significant new feature is the capability to perform route-specific analyses. Up to 40 separate transportation "links" or route segments may be defined. Each link may incorporate route-specific parameters, such as population density, vehicle velocity, accident rate, segment length, transport mode, and zone designation (rural, suburban, or urban). Aggregate data may still be utilized, if desired. Although the LINKS capability was not utilized in this study, route-specific aggregate data were developed using the HIGHWAY computer code (Joy et al. 1983). The route-specific data established here included population densities and shipping distances in various population density regions.

The radiological impacts from transportation accidents are expressed according to the level of consequence, probability of occurrence, and level of risk. A risk figure-of-merit is calculated by summing the products of the probability of each specific accident and its associated level of consequence.

[2]This model does not incorporate BEIR V or ICRP 60 health effects conversion factors. The authors of RADTRAN 4 recommend obtaining results as dose risks and applying BEIR V or ICRP 60 health effects conversions to them.

The following assumptions have been incorporated in the RADTRAN 4 program:

- Dose calculations in the population exposure model assume that the package or shipping cask is a point source or line source of radiation (line-source is used for handlers who work in close proximity to packages; point-source is used elsewhere).

- Radioactive materials released from a package during an accident are assumed to be dispersed according to standard Gaussian puff-type models. However, the user may define alternative dispersion factors if desired.

- External radiation exposures from ground contamination are calculated using an infinite plane source model.

- Verification and/or validation studies. Sensitivity analyses have been performed for several applications (i.e., incident-free transportation, vehicular accidents) of the RADTRAN III program and are documented in the *RADTRAN 4: Volume 3--User Guide* (Neuhauser 1986) and the *RADTRAN II User's Guide* (Madsen et al. 1986). RADTRAN 4 is in compliance with ANSI/IEEE 730-89 for software quality assurance and all benchmarking is documented in the accompanying software verification and validation plan.

Routine Radiological Impact Analysis

This section describes the incident-free or routine radiological impact analysis performed in support of this assessment. Incident-free transport refers to the situation in which the shipments of radioactive materials reach their destinations without releasing the package contents. Impacts from accidents are discussed later. Separate sections are provided in this chapter for a description of the approach, a discussion of the input data and assumptions, and presentation of the results.

Description of the Approach to Calculating the Radiation Doses During Normal (Incident-Free) Transport

Radiological impacts during normal transport involve dose to the public from radiation emitted by radioactive material packages as the shipment passes by and to transport workers who are in the general vicinity of a radioactive material shipment. Even though radiation shields are incorporated into packaging designs (if required by regulations), some radiation penetrates the package and exposes the nearby population to an extremely low dose rate. After the shipment has passed, no further exposure occurs.

The groups exposed to radiation while the shipments are in-transit include crew members of trains, truck drivers, those who directly handle radioactive shipping containers while they are in route, and the general public [e.g., bystanders at truck stops and rail sidings, persons living or working along a route, and nearby travelers (moving in the same and opposite directions)]. The RADTRAN 4 computer code (Neuhauser 1992) was used to calculate exposures during highway transport to these population groups.

Exposures to nearby populations and individuals occur as a result of the low levels of radiation emitted from the transportation packages. RADTRAN 4 calculates the doses received by the following population subgroups:

- Dose to passengers (for air transport only; not applicable to cesium and strontium capsule shipments)
- Dose to people in passing vehicles (referred to as "on-link" dose)
- Dose to surrounding population (referred to as off-link dose)
- Dose to crew
- Dose to warehouse personnel (for in-transit storage; not applicable to cesium and strontium capsule shipments)
- Dose to handlers (for intermediate handling; doses incurred for loading and unloading cesium and strontium capsules at origin and destination facilities are addressed elsewhere)
- Dose to flight attendants (for air shipments; not applicable to transport of cesium and strontium capsules)
- Dose to persons at stops (for long truck shipments requiring intermediate stops for rest, food, refueling).

For shipments of cesium and strontium capsules, the radiological impacts of incident-free transport are calculated for the truck crew, persons in passing vehicles (on-link), and the population surrounding the highways (off-link) and at truck stops.

Input Data for Normal Highway Transportation Impacts

The miscellaneous input data used in the analysis of normal radiation dose impacts during highway transport of cesium and strontium capsules are listed in Table B-5. These data are RADTRAN 4 default values, except where indicated, and are self-explanatory.

The population densities of the regions across which shipments must travel will influence the transportation impacts. Route-specific data for the predominantly-interstate highway routes between IOTECH (Northglenn, Colorado), ARECO (Lynchburg, Virginia), and the PNL facility in the 300 Area of the Hanford Site and the Hanford Site's 200 Areas, in which the WESF is located, were obtained from the HIGHWAY computer model (Joy et al. 1983). The route data are summarized in Table B-5.

Table B-5.
Input Data for Analysis of Routine Transport Impacts[a].

RADTRAN 4 Parameter	Origin Facility		
	IOTECH	PNL	ARECO
Fraction of travel in rural zone[b]	91.4	97.1	85.2
Fraction of travel in suburban zone[b]	7.7	2.9	13.2
Fraction of travel in urban zone[b]	0.8	0.0	1.6
Radiation dose rate at 1 meter from cask, millirem per hour[c]	14	14	14
Number of crewmen	2	2	2
Distance from source to crew, meters	10	10	10
Stop time per kilometer, hours per kilometer	0.011	0.011	0.011
Persons exposed while stopped	50	50	50
Average exposure distance while stopped, meters	20	20	20
Number of people per vehicle	2	2	2
Traffic count in rural zone, one-way vehicles per hour	470	470	470
Traffic count in suburban zone, one-way vehicles per hour	780	780	780
Traffic count in urban zone, one-way vehicles per hour	2,800	2,800	2,800
Total shipping distance, kilometers[b]	1,790	42	4,234
Rural population density, people per square kilometer[b]	4.2	2.4	7.2
Suburban population density, people per square kilometer[b]	339.0	89.8	360.5
Urban population density, people per square kilometer[b]	2092.3	0	2195.7

(a) Values are default values taken from and the *RADTRAN 4: Volume 3 – User Guide* (Neuhauser 1992) except where indicated.

(b) Source: HIGHWAY computer code calculations performed for this study.

(c) RADTRAN 4 will internally set the dose rate to the regulatory maximum value when this dose rate is specified.

Radiation dose rates emitted from the shipping cask are assumed to be equivalent to the regulatory limits given in 49 CFR 173 (maximum surface dose rate of 200 millirem per hour and maximum of 10 millirem per hour at 2 meters (6.6 feet) from the surface of the cask). No credit will be taken for shielding and for the exclusion of personnel from the surface of the cask that is provided by external devices such as personnel barriers or impact limiters.

Results of Normal Radiological Impact Calculations

The RADTRAN 4 computer code was applied to calculate the routine radiation doses to transport workers and the public that are estimated to result from transportation of cesium and strontium capsules from offsite origin facilities to the Hanford Site. All of these shipments were assumed to emit a radiation dose rate at the regulatory limit (i.e., 10 millirem per hour at 2 meters [6.6 feet] from the shipment surface). This assumption contributes to the conservatism of the analysis because the shipment dose rates cannot be larger than this value but frequently will be substantially smaller.

The results of the normal transportation impact calculations are presented in Table B-6. As shown, the total dose to truck crews (workers) amounts to about 0.4 person-rem for all of the shipments. Total public doses were calculated to about 6 person-rem, predominantly from exposures received during truck stops. There are no excess LCFs predicted to result from routine doses from the cesium and strontium capsule shipments.

To place the exposures and health effects in Table B-6 in perspective, a comparison was made to natural background exposures received by the same population affected by the cesium shipments. Natural background exposures were calculated for the exposed population along the route from the IOTECH Facility in Colorado to Hanford. For conservatism, only the 30-meter (99-foot) strip along the highway that is assumed to be unshielded (i.e., pedestrians as opposed to persons in buildings) was used in the calculations. The total area involved in this calculation is therefore the total shipping distance times 60 meters [198 feet) 30-meter [99-foot] wide strips on both sides of the highway). The number of persons in this area along the route was determined by multiplying the total affected area by the sum of the products of the travel fractions and population densities in rural, suburban, and urban zones, respectively, as shown below:

Total shipping distance = 1790 kilometers

Exposure area, A = (1790 km)(0.06 km) = 107 square kilometers

Total exposed population = $A \sum$ (Travel Fractions) (Pop. Densities)

= 107 square kilometers [(0.914)(4.2) + (0.077)(339) + (0.008)(2092.3)]

= 4990 persons

The population densities and travel fractions for the three population zones for the IOTECH shipments were taken from Table B-5.

Table B-6.
Results of Normal Transportation Impact Calculations.

Origin Facility	Capsule Type	Population Dose, person-rem		LCFs[a]		Total Detriment[a]	
		Worker	Public	Worker	Public	Worker	Public
IOTECH	cesium	3.35×10^{1}	5.10×10	1.34×10^{-4}	2.55×10^{-5}	1.88×10^{-4}	3.72×10^{-2}
ARECO	cesium	8.56×10^{2}	5.54×10^{1}	3.42×10^{-6}	2.77×10^{-6}	4.79×10^{-6}	4.05×10^{-5}
PNL	cesium	1.09×10^{-3}	4.69×10^{-4}	4.36×10^{-7}	2.34×10^{-7}	6.10×10^{-7}	3.42×10^{-6}
Total	cesium	4.22×10^{1}	5.66×10	1.69×10^{-4}	2.83×10^{-5}	2.36×10^{-4}	4.13×10^{-2}
PNL	strontium	3.64×10^{-4}	1.56×10^{-4}	1.46×10^{-7}	7.81×10^{-8}	2.04×10^{-7}	1.14×10^{-6}
Total	strontium	3.64×10^{-4}	1.56×10^{-4}	1.46×10^{-7}	7.81×10^{-8}	2.04×10^{-7}	1.14×10^{-6}
Total cesium and strontium		4.22×10^{-4}	5.66×10	1.69×10^{-4}	2.83×10^{-5}	2.36×10^{-4}	4.13×10^{-2}

(a) See Table B-13 for the health effects conversion factors used in this assessment.

The final step in this calculation is to multiply the total affected population by the average annual radiation exposures from natural background radiation. According the National Council on Radiation Protection and Measurements (NCRP 1987), the average annual natural background exposure in the United States is about 300 millirem per year. The resulting average annual radiation dose from natural background radiation to the exposed population between IOTECH and the Hanford Site was calculated to be 1,500 person-rem per year. Using the health effects conversion factors used in the calculations in Table B-6, the resulting health effects were calculated to be 0.75 LCFs and 11 total detrimental effects. The radiation doses from the IOTECH cesium capsule shipments amount to about 0.3 percent of the total annual dose from natural background radiation in the same population.

Impacts From Accidents Involving Radioactive Materials

The impacts associated with potential transportation accidents are expressed as risk. For this analysis, risk is defined as the product of the probability of occurrence of an accident involving the cesium shipments and the consequences of an accident. Consequences are expressed in terms of the health effects from a release of cesium-137 or strontium-90 from the packaging or the exposure of persons to radiation that could result from damaged package shielding.

The probability of an accident that involves radioactive materials is expressed in terms of the expected number of accidents per unit distance integrated over the total distance traveled. The response of the shipping cask and cesium capsule system to the accident environment, and hence, the probability of release or loss of shielding, is related to the severity of the accident. The probabilities of occurrence of transportation accidents that would release significant quantities of cesium-137 or strontium-90 is small because the BUSS cask is designed to withstand severe transportation accident conditions. Accidents on the road are difficult to totally eliminate. However, because the shipping casks are capable of withstanding severe transportation accident environments, including severe mechanical and thermal environments, only a small fraction of the accidents involve conditions that are severe enough to result in a release of radioactive material. Accidents with severities

exceeding design standards for shipping packages (10 CFR 71 and 49 CFR 173) could potentially occur, but their probability is extremely small. Approximately 99.4 percent of all truck accidents and 98.7 percent of all rail accidents are less severe than the hypothetical test conditions given in 10 CFR 71 (Fischer 1987). Thus, there is only a slight possibility that an accident could occur accompanied by a release or loss of package shielding.

The response of the BUSS Cask to severe accident scenarios has been evaluated (SNL 1991). The accident scenario referred to as the hypothetical accident conditions of transport, were taken from 10 CFR 71 (SNL 1991). The hypothetical accident conditions include a 9-meter (30-foot) drop onto an essentially unyielding surface, followed by exposure to an 800 °C (1,475 °F) fire for 30 minutes (puncture and water immersion environments are also included). These conditions are equivalent to a 48 kilometers (30 miles) per hour collision with an unyielding target (e.g., a bridge abutment), followed by exposure to an engulfing jet fuel fire for 30 minutes. Over 99 percent of all highway accidents involve mechanical and thermal conditions less severe than the hypothetical accident conditions defined in 10 CFR 71 (Fischer 1987). Therefore a release of radioactive material is unlikely to occur. The Maximum Credible accident, defined here as one having a frequency greater than or equal to 1×10^{-6} per year, was estimated to be a 74 kilometer (46 miles) per hour impact onto a hard rock surface followed by exposure to an 800 °C (1,475 °F) fire for 30 minutes (Fisher 1987). It is anticipated that no release of radioactive material from the BUSS Cask to the environment would occur as a result of this event. The following impact analysis includes impact velocities as high as 340 kilometers (150 miles) per hour and exposure to an 800 °C (1,475 °F) fire for over 3 hours. The probabilities and consequences of encountering such accident conditions were factored into the transportation environmental impact calculations, conservatively including considerations for a release of radioactive material into the environment.

Should an accident involving a cesium or strontium capsule shipment occur, a release of radioactive material could occur only if the shipping cask and capsules were to become breached. A breach would most likely be a small gap in a seal or small split in the cask or capsule. For the radioactive material to reach the environment, it would have to become released from the material form, pass through the breach in the capsule, and then through the breach in the cask. Because cesium would be released as a vapor, much of it would condense or settle on a cask surface or on the ground near the cask. Strontium would be released as a solid particulate material. Only very small particles which behave similar to a gas would become entrained in a plume. Materials released from the cask, including the small particles or vapors, would in turn become dispersed and diluted by weather action and a fraction would be deposited on the ground (i.e., drop out of the contaminated plume) in the surrounding region. Emergency response crews arriving on the scene would evacuate and secure the area to exclude bystanders from the accident scene. The released material would then be cleaned up using standard decontamination techniques, such as excavation and removal of contaminated soil. Monitoring of the area would be performed to locate contaminated areas and to guide cleanup crews in their choice of protective clothing and equipment (e.g., fresh-air equipment, filtered masks, etc.). Access to the area would be restricted by federal and/or state radiation control agencies until it had been decontaminated to safe levels.

The RADTRAN 4 computer code was used to calculate the radiological impacts of transportation accidents involving cesium capsule shipments. The RADTRAN 4 computer code methodology was summarized previously.

Input Data for the Analysis of Transportation Accident Impacts

There are five major categories of input data needed to calculate transportation impacts. These are: (1) accident probability; (2) release quantities; (3) atmospheric dispersion parameters; (4) population distribution parameters; and (5) human uptake and dosimetry models. Each of these major areas is discussed below.

Accident Probability

The probability of a severe accident is calculated by multiplying an overall accident rate (accidents per kilometer [truck-mile]) by the conditional probability that an accident will involve mechanical and/or thermal conditions that are severe enough to result in cask failure and subsequent release of radioactive material. For this analysis, six accident severity categories were defined; category 1 is the least severe and category 6 is the most severe. The conditional probabilities of encountering accident conditions in each severity category are shown below. Note that the conditional probabilities are a function of the population zone (i.e., rural, suburban, and urban) in which the accidents might occur. The overall accident rates and amount to 2.08×10^{-8}, 4.06×10^{-7}, and 2.34×10^{-6} accidents per kilometer in rural, suburban, and urban population zones, respectively.

Conditional Probability (i.e., given the prior occurrence of an accident)	Severity Category					
	1	2	3	4	5	6
Rural	0.603	0.394	3.0×10^{-3}	3.0×10^{-6}	5.0×10^{-6}	7.0×10^{-6}
Suburban	0.602	0.394	4.0×10^{-3}	4.0×10^{-6}	3.0×10^{-6}	2.0×10^{-6}
Urban	0.604	0.395	3.8×10^{-4}	3.8×10^{-7}	2.5×10^{-7}	1.3×10^{-7}

Release Fractions for Cesium Capsule Shipments

Release fractions (Array RFRAC in RADTRAN 4) are used to determine the quantity of radioactive material released to the environment from severe accidents. The quantity of material released is a function of the severity of the accident (i.e., thermal and mechanical conditions produced in the accident), the response of the shipping cask and capsules to these conditions, and the physical and chemical properties of the material being shipped. The bases for the release fractions used in this analysis are discussed below.

A six-parameter array will be used to describe the release fractions. One release fraction is assigned to each accident severity category. The first release fraction relates to the releases expected from the normal conditions of transport that are defined in 10 CFR 71. The second release fraction is related to the releases from hypothetical accident conditions that are also defined in 10 CFR 71. Since the BUSS cask is a certified Type B packaging, the packaging can withstand the 10 CFR 71 hypothetical conditions without loss of contents. It was stated in the BUSS cask SARP (SNL 1991) that "... the structural and leak integrity of the special form contents are unaffected by the hypothetical accident conditions." Consequently, the release fractions for these two severity categories are both set equal to zero.

The third release fraction encompasses accident severities greater than the hypothetical accident conditions. The BUSS cask and the special form capsules provide substantial protection from these extra-regulatory thermal and mechanical accident conditions. Information related to the cask and capsule response to severe accident environments is summarized below:

- According to *WESF Cesium Capsule Behavior at High Temperature or During Thermal Cycling* (Tingey et al. 1985), cesium chloride expands when heated to 800 °C (1,470 °F) . The components of this expansion include thermal expansion of the solid and liquid phases (total of about 22 percent expansion), a crystalline phase transition (18 percent expansion) that occurs at 469 °C (876 °F), and solid-to-liquid transition (10 percent expansion) that occurs at 645 °C (1190 °F). Therefore, the most significant thermal expansion mechanisms occur at temperatures above about 469 °C (876 °F).

- Strontium capsules have been qualified as special form in accordance with U.S. Department of Transportation requirements (49 CFR 173.469). A test program (Fullam 1981) determined that the strontium capsules can withstand thermal environments up to 800 °C (1,470 °F) without failure. The test program also involved impact, puncture, vibration, and thermal quench environments.

- The cesium capsules are certified to withstand a thermal environment of 800 °C (1,470 °F) for up to 90 minutes duration (SNL 1991). Slight swelling may occur near the ends of the capsules following exposure to an 800 °C (1,470 °F) thermal environment for 90 minutes, but the capsules do not fail or release their contents (Kenna 1984). Cesium capsules have been qualified as special form in accordance with Department of Transportation requirements (49 CFR 173.469).

- It was shown in the BUSS Cask SARP (SNL 1991) that the region nearest the cask cavity reaches 215 °C (420 °F) following exposure of the cask to the hypothetical thermal test (800 °C [1,470 °F] fire for 30 minutes) and 225 °C (440 °F) after a 30 minute post-fire-test cooldown period.

- Cesium capsules are constructed of 316L stainless steel, a very ductile material. 316L stainless steel is capable of withstanding up to 55 percent elongations. Sixty-seven percent elongations have been measured for Hastelloy® Alloy C-276 (Fullam 1981).

Based on these observations, it was concluded that the packaging system, including the BUSS cask and special form capsules, can withstand accident conditions that are substantially more severe than the hypothetical accident conditions defined in 10 CFR 71. Mechanical damage to the capsules is mitigated by the structural resistance of the BUSS cask to impact and puncture loads as well as the ability of the 316L stainless steel and Hastelloy® Alloy C-276 materials to withstand large deformations without failure. The ability to withstand extra-regulatory thermal loads is illustrated by the fact that the capsules are capable of withstanding 90-minute exposures to 800 °C (1,470 °F) whereas the inner shell of the BUSS cask reaches only about 225 °C after the regulatory fire test. Consequently, the release fraction for severity Category 3 was assigned a value of zero.

Severity category 4 was defined to be the lowest severity category at which a release of material from the cask may occur. This severity category encompasses thermal conditions that heat the cesium chloride to below the crystalline phase transition temperature or 469 °C (876 °F). The assumption that this temperature will result in a release of material is conservative because the capsules are not expected to fail at temperatures below 800 °C (1,470 °F) (90 minute exposure time) and, if the inner capsule were to fail, the thermal expansion of cesium chloride would likely be accommodated by the void space between the inner and outer capsules. The capsules' resistance to mechanical damage is demonstrated by the high ductility of the 316L stainless steel capsule material. Only an extremely severe impact accident could result in damage to the capsules that produce strains in excess of the elongation value presented above. Such an accident has an extremely low likelihood, as demonstrated by (Fischer 1987).[3]

Little information is available on releases from cesium capsules and none could be found that is directly applicable to this situation. The best available information was obtained from documentation of cesium releases from spent nuclear fuel (Lorenz et al. 1980). Although the forms of the materials are different (melt-cast cesium salt verses sintered ceramic UO_2 pellets), there are some important similarities. First, the materials are initially solid, essentially unbroken items; i.e., there are few small particles within their respective containment boundaries. Second, both materials undergo significant phase-change-related volumetric expansion upon heating. Both materials undergo a crystalline phase transformation that increases their volumes significantly. The UO_2 phase transformation, (oxidation from UO_2 to U_3O_8), which occurs at relatively low temperatures in air[4], causes significant spallation and cracking which increases the surface area available for diffusion and other release mechanisms. This process increases release rates and also creates the potential

[3]Note that the conditional probability of exceeding 30 percent strains on the inner steel shell of a generic lead-shielded shipping cask is on the order of 1E-7 given the occurrence of an accident (Fischer 1987).

[4]Significant oxidation occurs in air at temperatures as low as 229 °C (Einziger and Cook 1984).

for containment barrier failure due to thermal expansion. Oxidation does not occur at temperatures up to 649 °C (1,200 °F) in the cesium salt at which the solid-to-liquid transition occurs. Therefore, spallation and cracking of cesium salt is not expected to increase greatly with increasing temperatures up to 649 °C (1,200 °F). For this reason, release fractions from the cesium salt form were judged to be comparable to or less than corresponding releases from UO_2.

Simple stress calculations were performed to compare the level of stress necessary to produce rupture of the cesium capsules relative to zircalloy-clad spent nuclear fuel. Hoop stress calculations were performed for the inner cesium capsule and spent fuel cladding to determine the level of applied stress needed to produce stresses in the capsule and cladding materials equal to their ultimate tensile strength. According to (Roark 1975), hoop stress, designated σ_2 (in pounds per square inch), in a cylindrical shell under uniform radial pressure, q (in pounds per square inch), is calculated according to the following formula:

$$\sigma_2 = qR/t$$

where: R = radius of curvature of circumference, in.
t = shell thickness, in.

Solving for q and setting the hoop stress equal to the ultimate tensile strength of the material, σ_{UTS}, this formula becomes:

$$q = \sigma_{UTS}t/R$$

In this case, the value of q is the uniform pressure necessary to produce stresses in the shell material equal to its failure strength.

The material properties, physical data, and hoop stress calculations are shown in Table B-7. As shown, the applied constant pressure necessary to produce hoop stresses equal to the ultimate tensile strength of zircalloy cladding is less than the applied pressure necessary to produce this stress in the 316L stainless steel cesium capsule material. This indicates that the cesium capsule is capable of withstanding higher burst pressures than zircalloy clad spent fuel. For this reason, the cesium release fractions determined from testing of irradiated fuel are believed to be comparable to, and most likely conservative, approximations for cesium capsules.

The cesium release fraction data used in this analysis were taken from the experimental data developed on spent nuclear fuel (Lorenz et al. 1980). The data used here are based on experiments performed on spent fuel that was heated in dry air to 500 °C (932 °F) and 700 °C (1,292 °F). The release fractions presented by the amounted to 1.3×10^{-7} percent per hour and 2.84×10^{-4} percent per hour for the 500 °C (932 °F) and 700 °C (1,292 °F) tests, respectively. Assuming that the release from the cesium capsule shipments is terminated after 4 hours, the total release fractions were calculated to be 5.2×10^{-9} and 1.14×10^{-5}, respectively. These two release fractions were assigned to release categories 4 and 5, respectively.

The release fraction for release category 6 also was developed from data provided by the *Fission Product Release from Highly Irradiated LWR Fuel* report (Lorenz et al. 1980). It was stated that, "One to two hundred times more cesium ... were released when the test segments were pressure ruptured at 900 °C [1,652 °F]..." (Lorenz et al. 1980). This is an extremely severe thermal environment that would not occur except under the most unlikely accident scenarios, such as those encompassed by severity category 6. This would lead to a release fraction of approximately 2.0×10^{-3} under these conditions. The fractional cesium release from this test was 0.455 percent over a 9-hour period. For a 4-hour release, this equates to a release fraction of 2.0×10^{-3}. Consequently, the release fraction for severity category 6 was set equal to 2.0×10^{-3}.

Table B-7.
Hoop Stress Comparison for Cesium Capsules and Zircalloy Cladding.

Formula: $q = \sigma_{UTS} t/R$				
Parameter	Zircalloy clad spent fuel	Source	316L Cesium Capsule (inner)	Source
σ_{UTS}	520 MPa (7.54×10^4 per square inch)	(Brandes and Brook 1985)	620 MPa (8.99×10^4 per square inch)	(Brandes and Brook 1985)
R	0.373 inch	(Lorenz et al. 1980)	2.114 inch	(Kenna 1984)
t	0.0243 inch	(Lorenz et al. 1980)	0.136 inch	(Kenna 1984)
q	$q = \frac{(7.54E \times 10^4 \text{ per square inch})(0.0243 \text{ inch})}{0.373 \text{ inch}}$ $= 4.91 \times 10^3$ per square inch		$q = \frac{(8.99 \times 10^4 \text{ per square inch } (0.136 \text{ inch})}{2.114 \text{ inch}}$ $= 5.78 \times 10^3$ per square inch	

Several additional sources were reviewed for release fraction data applicable to cesium releases from spent nuclear fuel, including *Shipping Container Response to Severe Highway and Railway Accident Conditions* (Fischer 1987), *RADTRAN 4: Volume 3 -- User Guide* (Neuhauser 1992), *Transportation Accident Scenarios for Commercial Spent Fuel* (Wilmot 1981), *Final Environmental Impact Statement: Disposal of Hanford Defense High-Level, Transuranic and Tank Wastes, Hanford Site, Richland, Washington* (DOE 1987), and *An Assessment of the Risk of Transporting Spent Nuclear Fuel By Truck* (Elder et al. 1978). A summary of the release fractions from these studies is presented in Table B-8. As shown in the table, the release fractions vary over several orders of magnitude. However, the information is sufficient to indicate that the release fractions used in this analysis are conservative. The release fraction array, which was for spent fuel transportation, can be compared directly to the array established in this study (Neuhauser 1992). Severity category 4 is slightly higher in Neuhauser 1992, but the remaining release fractions are significantly higher for this study. Similarly, other studies appear to have higher or similar release fractions for the lower severity categories and lower release fractions for higher severities. The data from *A Method For Determining the Spent Fuel Contribution to Transport Cask Containment Requirements* (Sanders et al. 1992) indicate a release fraction of about 6.0×10^{-5} for the burst rupture mechanism, representative of

severity category 5. This is compared with 1.0×10^{-5} used here. This is believed to be reasonable based on the higher resistance to internal and external loads provided by the 316L stainless steel cesium capsule relative to zircalloy cladding. Furthermore, no credit has been taken for the resistance to impact and thermal loads provided by the outer stainless steel cesium capsule (spent fuel has only one layer of cladding).

Table B-8.
Summary of Cesium Release Fraction Data for Transportation Accidents from the Literature.

Source	Cesium Release Fractions	Comments
(Sanders et al. 1992), pp. 82, 86	4.9×10^{-5} for PWR fuel 6.6×10^{-15} for BWR fuel	Release from gap and fuel fines at 530 °C (986 °F) Burst rupture mechanism.
(Fischer 1987)	a. Rod Burst: 2.0×10^{-4} Oxidation: 1.0×10^{-6} 2.0×10^{-4} b. Rod Burst: 2.0×10^{-4} Oxidation: 8.0×10^{-6} 2.1×10^{-4}	a. For most regions of Fig. 8-11 (Fischer 1987) b. For most severe regions see Fig. 8-11 (Fischer 1987)
(Neuhauser 1992)	Six severity categories defined. Release fractions are 0, 0, 0, 1.0×10^{-5}, 5.0×10^{-4}, and 5.0×10^{-3}, respectively.	Similar to the severity category scheme used in this analysis.
(Elder et al. 1978)	Release fraction for volatiles (cesium) stated to be 0.0003 for all scenarios involving impact and fire or fire-only (2 hour fire durations).	Release fractions from other sources (Elder et al. 1978) included 6.7×10^{-4} percent, 1.0×10^{-2} to 1.0×10^{-3} percent, and 3.0×10^{-2} percent.
(DOE 1987)	Eight severity categories; release fractions were 0, 0, 0.001, 0.01, 0.1, 1, 1, and 1, respectively.	Represents total release to the environment. Fractions of released material that are in aerosol and respirable forms were accounted for separately.
(Wilmot 1981)	Five severity levels defined. Release fractions were 0, 8.0×10^{-6}, 2.0×10^{-4}, 3.0×10^{-4}, and 3.0×10^{-4} (respirable-sized particles released to the environment).	Includes, where applicable, the following release mechanisms: leaching, impact rupture, burst rupture, diffusion, and oxidation.

According to various sources (Fischer 1987, Wilmot 1981, Elder et al. 1978), cesium is semi-volatile and will be released initially as a vapor. Once released from the cask, the gaseous cesium would begin to cool and condense and would most likely be deposited on or near the cask. The *Transportation Accident Scenarios for Commercial Spent Fuel* report (Wilmot 1981) stated that 5 percent of the released volatiles, including cesium, from a cask with a gaseous internal atmosphere, would be in form of particles small enough to be respirable (i.e., less than 10 μm mean aerodynamic diameter. This fraction was applied to the released material in severity category 4 accidents. The respirable fractions for severity categories 5 an 6 were assumed to be 1.0 (i.e., 100 percent respirable-sized particles). The RADTRAN arrays used in this study to characterize the release of cesium-137 from the BUSS cask are presented in Table B-9.

Release Fractions for Strontium Capsule Shipments

The derivation of the strontium-90 release fractions for accident severity categories 1 to 3 is the same as that performed for the cesium-137 release fractions. Basically, the BUSS cask and special form strontium capsule were shown to withstand accident environments that are substantially more severe than the hypothetical accident conditions specified in 10 CFR 71. Consequently, the release fractions are 0.0 for severity categories 1 to 3.

The strontium fluoride material is different in appearance and physical properties than cesium chloride. Initial strontium capsules consisted of large chunks of hard solid material. Changes were made to the strontium fluoride production process that resulted in a more finely-divided, powdery form. The release fractions derived in this section will be based on shipment of the powder form because it is more readily released from a small split in a capsule or cask and is more readily dispersible and respirable.

Strontium is not a volatile material like cesium and will not be released from a shipping cask as a vapor. Rather, it will be released in the form of solid particles. As was done for cesium releases, the best available information on strontium releases is that for releases from irradiated commercial reactor fuel assemblies. As a result, simple hoop strength calculations were performed to determine whether or not the Hastelloy® Alloy C-276 inner capsule is capable of withstanding higher applied stresses than the Zircalloy cladding used for fuel assemblies. Calculations similar to those illustrated in Table B-7 were performed for the strontium capsules. The strontium capsule hoop stress calculations are shown in Table B-10. As shown, the applied stress required to produce the ultimate tensile strength on the inner capsule material is about 13,000 pounds per square inch. This is substantially higher than the 4,900 per square inch applied stress that could fail zircalloy cladding (Table B-7). As a result, the Hastelloy® Alloy C-276 inner capsule is capable of withstanding substantially more severe loads than the zircalloy cladding.

A literature search was performed to identify documents that contain strontium release information for irradiated fuels. The information obtained from the literature is presented in Table B-11.

Table B-9.
Cesium-137 Release Characterizations Used in RADTRAN 4 Calculations.

Array	Accident Severity Category					
	1	2	3	4	5	6
RFRAC (Release fraction)	0.0	0.0	0.0	5×10^{-6}	1.0×10^{-3}	2.0×10^{-3}
AEROSOL (fraction of released material that is in dispersible form)	0.0	0.0	0.0	1.0	1.0	1.0
RESP (fraction of dispersed material that in respirable form)	0.0	0.0	0.0	0.0	1.0	

Table B-10.
Hoop Stress Calculations for Strontium Capsules.

Formula: $q = \sigma_{UTS} t/R$

q = applied stress, per square inch
σ_{UTS} = Ultimate tensile strength of material, per square inch
t = thickness of material, in.
R = Radium of curvature, in.

Parameter	Hastelloy® Alloy C-276 Capsule (inner)	Source
σ_{UTS}	745 MPa (1.08×10^5 per square inch)	(Fullam 1981)
t	0.24 inch	(SNL 1991)
R	2.01 inch	(SNL 1991)
q	$q = \frac{(1.08 \times 10^5 \text{ per square inch})(0.24 \text{ inches})}{2.01 \text{ inches}}$ $= 1.29 \times 10^4$ per square inch	

Table B-11.
Strontium Release Data from the Literature

Document	Release Fraction Information	Remarks
(Wilmot 1981)	Impact rupture: 2.0×10^{-4} Burst Rupture: 2.0×10^{-5} No releases from crud, oxidation, or diffusion mechanisms 0.05 1.0 0.05	Release fractions to cask cavity Release fraction from cask cavity to the environment for both mechanisms Fraction aerosolized Fraction respirable
(Fischer 1987)	2.0×10^{-4}	Release fraction for particulates in all regions of matrix (all thermal and impact conditions); rod burst.
(Elder 1978)	1.0×10^{-4} 2.0×10^{-5} $< 5.0 \times 10^{-4}$	Impact failures Creep rupture of cladding Oxidation
(Neuhauser 1992)	0, 0, 0, 1.0×10^{-4}, 1.0×10^{-4}, 4.2×10^{-5}	RFRAC array for similar 6 severity category scheme
(Lorenz 1980)	4.0×10^{-4}	Fraction of UO_2 particles released in test at 900 °C (1,652 °F)
(Sanders et al. 1992)	3.0×10^{-5} 3.0×10^{-5} 0.1	Total g of strontium-90 released divided by initial g of strontium-90 Total g of spent fuel particles released divided by total initial g present Aerosol fraction (accounts for deposition and gravitational settling of particles) For burst rupture of cladding, 530 °C (986 °F)

As discussed for the cesium release fractions, severity category 4 is representative of the releases from impact-type ruptures of the capsule. That is, the temperatures inside the cask remain relatively low (less than 500 °C [932 °F]). Therefore, the release fraction used in this assessment for severity category 4 was assumed to be 2.0×10^{-6}, based on the information provided by (Fischer 1987). Temperatures and fire durations are assumed to be long enough in severity category 5 to result in burst rupture failures of the capsule. Therefore, the release fraction was assumed to be 3.0×10^{-5} (Sanders et al. 1992). For severity category 6, temperatures were assumed to be extremely high, (representative of the 900 °C [1,652 °F]). Therefore, the release fraction for severity category 6 was assumed to be 4.0×10^{-4}. The strontium release fractions are believed to be conservative because they are based on releases from irradiated fuel assemblies which have been shown to be less resistant to applied loads than the strontium capsule, and no credit is taken for the resistance to impact and thermal loads provided by the outer capsule.

The release data in Table B-11 were also used to derive estimates of the aerosolization and respirable fractions of the released strontium. Ten percent of the released strontium would be in the form of dispersible particles for burst rupture type failures (Sanders et al. 1992). The *Transportation Accident Scenarios for Commercial Spent Fuel* report (Wilmot 1981) estimated 5 percent would be aerosolized. The 10 percent value will be used here. This aerosolization fraction would encompass severity categories 4 and 5. For conservatism, the aerosolization fraction for severity category 6 will be 1.0. Similarly, since the strontium fluoride may be in a powdery form, the respirable fractions for all releases are assumed to be 1.0. The final strontium release arrays used in this assessment are presented in Table B-12.

Atmospheric Dispersion Parameters

The RADTRAN 4 computer code offers a default set of atmospheric dispersion data that may be used in the consequence calculations. These atmospheric dispersion parameters have been used in many previous environmental documents. For consistency with these past studies, the default atmospheric dispersion data offered in RADTRAN 4 was used in this assessment.

Population Distribution Parameters

Population distribution data used by RADTRAN 4 include population densities in rural, suburban, and urban zones as well as the fractions of travel in each zone. These input parameters were developed on a route-specific basis using the HIGHWAY computer program (Joy et al. 1983). The population distributions used in this analysis were shown previously in Table B-5.

Human Uptake of Radionuclides and Dosimetry Models

The dosimetry system incorporated into the RADTRAN 4 code is summarized below:

- Radionuclide half-lives and photon energies are taken from Radionuclide *Transformations, Energy, and Intensity of Emissions*, ICRP-38 (ICRP 1983).
- Cloud dose factors or the effective factor for immersion in air contaminated with specified radionuclides were taken from *External Dose Rate Conversion Factors for Calculation of Dose to the Public* (DOE 1988a).
- Committed effective dose equivalent (CEDE) conversion factors for 50-year committed doses from inhalation were taken from *Estimates of Internal Dose Equivalent from Inhalation and Ingestion of Selected Radionuclides* (Dunning 1983) and *Internal Dose Conversion Factors for Calculation of Dose to the Public* (DOE 1988b).
- Ingestion doses were not calculated in this assessment.

Additional information on the dose conversion factors used in RADTRAN 4 is available (Neuhauser 1992).

The RADTRAN 4 computer code was applied to calculate population doses (person-rem) from accidents. This allows the user to convert the population doses to health effects using the most recent health effects conversion factors from ICRP-60 (ICRP 1991). The health effects conversion factors used here are shown in Table B-13.

Table B-12.
Strontium-90 Release Characteristics used in RADTRAN 4 Calculations.

	Accident Severity Category					
Array	1	2	3	4	5	6
RFRAC (Release fraction)	0.0	0.0	0.0	2.0×10^{-4}	3.0×10^{-3}	4.0×10^{-4}
AEROSOL (fraction of released material that is in dispersible form)	0.0	0.0	0.0	0.1	0.1	1.0
RESP (fraction of dispersed material that in respirable form)	0.0	0.0	0.0	1.0	1.0	1.0

Table B-13.
Health Effects Conversion Factors[a].

Cancer Fatalities	Public	5.0×10^{-4} per person-rem
	Workers	4.0×10^{-4} per person-rem
Total Detriment (cancer fatalities, incidence, and genetic effects)	Public	7.3×10^{-3} per person-rem
	Workers	5.6×10^{-4} per person-rem

(a) Source: (ICRP 1991)

Results of Transportation Accident Impact Analysis

The RADTRAN 4 computer code was used to calculate the impacts of transportation accidents involving the cesium and strontium capsules. As explained previously, the impacts are presented in terms of the probabilistically-weighted consequences of transportation accidents. That is, the impacts are the product of the probability and consequences of an accident and have been integrated over all of the shipments. The results of this assessment are presented in Table B-14.

The results in Table B-14 show that the total transportation impacts from accidents during the return shipments of cesium and strontium capsules are about 2.0×10^{-4} person-rem. In terms of LCFs and total detriment, the impacts are about 1.0×10^{-7} and 1.5×10^{-6}, respectively. The results are almost entirely due to cesium capsule shipments, primarily due to the fact that there are many more cesium capsules than strontium capsules to be returned to the WESF. This means that there are far more cesium capsule shipments to be made, which increases the likelihood of a severe accident.

Table B-14.
Results of Transportation Accident Impact Calculations.

Origin Facility	Capsule Type	Population Dose, person-rem	LCFs	Total Detriment
IOTECH	cesium	1.40×10^{-4}	7.00×10^{-8}	1.02×10^{-6}
ARECO	cesium	5.88×10^{-5}	2.94×10^{-8}	4.29×10^{-7}
PNL	cesium	4.83×10^{-8}	2.42×10^{-11}	3.53×10^{-10}
Total cesium	cesium	1.99×10^{-4}	9.94×10^{-8}	1.45×10^{-6}
PNL	strontium	5.15×10^{-9}	2.58×10^{-12}	3.76×10^{-11}
Total strontium	strontium	5.15×10^{-9}	2.58×10^{-12}	3.76×10^{-11}
Total cesium and strontium		1.99×10^{-4}	9.94×10^{-8}	1.45×10^{-6}

PACKAGING

Packaging, as used in this report, is defined as the shipping container for radioactive material. Properly designed, manufactured, and prepared packaging is the primary means for ensuring the safe transport of radioactive materials. Consequently, most of the regulations are concerned with packaging standards.

U.S. Department of Transportation (DOT) regulations that apply to shipments of capsules are contained in 49 CFR 173. These regulations seek to enhance safety through three key elements. These elements are containment of radioactive material, with allowances for heat dissipation if required; shielding from radiation emitted by the material; and prevention of nuclear criticality in fissile materials (not applicable to this action, no fissile materials involved). These aspects of DOT regulations are addressed in the remainder of this subsection.

Regulations allow radioactive materials to be shipped in different types of packagings, depending on the total radioactive hazard presented by the material within the package. The radionuclide content of the cesium and strontium capsule shipments exceeds the limits specified in 49 CFR 173.435 for a Type A package and so must be shipped in a Type B package.

All packagings must meet, as a minimum, the design requirements described in 49 CFR 173, Sections 411 and 412. Type B packagings must additionally meet the design requirements for Type B packages specified in 49 CFR 173.413. These Type B design requirements are found in 10 CFR 71, Subpart E. In addition, the packagings must meet the testing requirements specified in 49 CFR 173.465 for Type A packages and 49 CFR 173.467 for Type B packages. Type B packaging tests are found in Nuclear Regulatory Commission regulations in 10 CFR 71, Subpart F.

Radioactive materials exceeding the limits for Type A packagings, such as the capsules, can be shipped only in Type B packagings. These packagings are extremely accident-resistant. Any Type B packaging design placed in service must be certified to the design and testing standards of the NRC. In addition to meeting the standards for a Type A packaging, a Type B packaging must be designed to withstand severe hypothetical accident conditions that demonstrate resistance to impact, puncture, fire, and water immersion (10 CFR 71.73). To be acceptable, the Type B packaging must release no radioactivity except for limited amounts of contaminated coolant and gases. Also, there can be no external radiation dose rate exceeding 1,000 millirem per hour at 1 meter (3.3 feet) from the external surface of the packaging [10 CFR 71.51(a)(2)]. Surface contamination of packagings is limited to specified levels. The method for determining amounts of surface contamination is specified in 49 CFR 173.443.

Radiation allowed to escape from a packaging must be below specified limits that minimize the exposure of the handling personnel and general public. Radioactive packages are handled only by the shipper and receiver (i.e., shipped in exclusive-use or sole-use vehicles in which the radioactive materials are the only commodity aboard the truck) and must be designed so that the following radiation limits are not exceeded (49 CFR 173.441) during normal transport activities:

- 1,000 millirem per hour on the external surface (in a closed transport vehicle only).
- 200 millirem per hour at any point on the external surface of vehicle.
- 10 millirem per hour at any point 2 meters (6.5 feet) from the vertical planes projected by the outer lateral surfaces of the car or vehicle; or if the load is transported in an open transport vehicle, at any point 2 meters (6.5 feet) from the vertical planes projected from the outer edges of the vehicle.
- 2 millirem per hour in any normally occupied position in the car or vehicle. This provision does not apply to private motor carriers under certain conditions.

Cesium and strontium capsules have been qualified as special form in accordance with Department of Transportation requirements (49 CFR 173.469). This means that the capsules and contained materials are capable of withstanding a series of test conditions without the protection provided by the shipping cask or container. The tests include a 9-meter (30-foot) drop test, percussion, bending,, heating in air to 800 °C (1,472 °F) for 10 minutes, and leaching.

Reynolds Electrical & Engineering Co., Inc.
Post Office Box 98521 • Las Vegas, NV 89193-8521

IN REPLY REFER TO:
535-01-65

E. D. Robbins, Manager
WESF Engineering
Westinghouse Hanford Company
Post Office Box 1970 SC-65
Richland, WA 99352

WESF STRONTIUM CAPSULES

Following is a response to your request to document the location, arrangement, and disposition of WESF strontium capsules S-65, S-102, S-105, and S-431 shipped to the Nevada Test Site (NTS) in 1986.

These strontium capsules were placed in a steel container to be used as the heat source for the Greater Confinement Disposal Test (GCDT), located at the NTS, Radioactive Waste Management Site in Area 5. U.S. Department of Energy, NTS grid coordinates N.766,331/E.709,349 were assigned for permanent disposal in GCDT augured hole, 120 feet underground.

The undersigned have reviewed and verified the accuracy of the above information:

E. W. Kendall, Manager
Waste Management Department
Reynolds Electrical & Engineering Company, Inc.

L. J. O'Neill, Chief
Waste Operations Branch
U.S. Department of Energy

If there are any questions or comments, please call.

E. W. Kendall, Manager
Waste Management Department

EWK:ec

cy: L. J. O'Neill, DOE/NV, M/S 505

TOTAL QUALITY IS OUR BUSINESS.

REECo
AN EG&G COMPANY

This page intentionally left blank.

Key Regulatory Elements for Isotope Capsule Shipments

Vehicle Safety

The carriers of radioactive materials must meet, at a minimum, the same requirements as carriers for any hazardous material. Truck safety is governed by the Bureau of Motor Carrier Safety of the DOT, which imposes vehicle-safety standards on all truck carriers (49 CFR 325.386 through 325.398). Along with other functions, the Bureau conducts unannounced wayside inspections of all truck-carrier vehicles and drivers. Several states, including Washington and Oregon, also have truck inspection programs. During the inspection, the condition and loading of the vehicle and the drivers' documents are checked. Trucks carrying radioactive materials must be placarded in accordance with 49 CFR 172. In addition, some states will use the Commercial Vehicle Safety Alliance's Enhanced North American Inspection Standards as a guideline for their inspections; but will only enforce current federal vehicle-safety standards. These standards also include radiological measurements of the casks at each port of entry for the states participating in this inspection. The training for this type of inspection was conducted by the U.S. Department of Energy (DOE) on the BUSS cask at the IOTECH Facility in Northglenn, Colorado.

Highway Routing

The DOT's routing regulations, 49 CFR 177.825 (Docket HM-164), were published January 19, 1981, and became effective February 1, 1982. The objectives of these regulations are to reduce impacts of transporting radioactive materials, to establish consistent and uniform requirements for route selection, and to identify the role of state and local governments in the routing of radioactive materials. The regulations attempt to reduce potential hazards by avoiding populous areas and minimizing transit times. A carrier or any person operating a motor vehicle carrying a "highway-route-controlled quantity" of radioactive materials is required by Docket HM-164 to use the interstate highway system except when moving from origin to interstate or interstate to destination. Other "preferred highways" may be designated by any state to replace or supplement the interstate highway system. Under its authority, however, to regulate interstate transportation safety, the DOT can overrule state and local bans and restrictions as "undue restraint of interstate commerce."

All regulations announced by state and local governments have to be consistent with the provisions of Docket HM-164 or they will be preempted. The DOT holds that conflicting requirements among jurisdictions may be unduly restrictive and may increase risks by directing shipments to highways having higher accident rates.

The DOT regulation requires carriers to use routes selected to minimize transit time and radiological risk. Carriers transporting cesium and strontium capsules will be required to travel on interstate circumferential or bypass routes, if available, to avoid populous areas. Carriers may use interstate or preferred highways that pass through urban areas only if circumferential routes are not available.

Emergency Response

Many agencies share the responsibilities for dealing with accidents involving shipments of radioactive materials. A national radiological assistance plan has been developed for responding to real or suspected releases of radioactive material from a shipment in transit. For example, under this plan, the Federal Emergency Management Agency (FEMA) has the primary responsibility for emergency response planning for transportation accidents involving radioactive materials. Also at the federal level, the DOE will make available from its resources radiological advice and assistance to protect the public health and safety and to cope with radiological hazards. Federal support is also available from the U.S. Environmental Protection Agency, the U.S. Department of Health and Human Services through the U.S. Food and Drug Administration, the DOT, and the NRC.

The ultimate responsibility for emergency response planning generally lies with state and local governments. Most State and local governments have established emergency response plans. Local jurisdictions assume primary responsibility for emergency response planning because a member of a local law enforcement agency or fire department is likely to be the first responder to a transportation accident. It is the policy of the DOE, upon request from state, federal, or local authorities, NRC licensees, private organizations, or commercial carriers, to provide radiological assistance teams and training to state and local authorities. One such radiological assistance team operates out of the Hanford Site.

The FEMA has published "Guidance for Development of State and Local Radiological Emergency Response Plans and Preparedness" (FEMA 1983). This document details necessary components of emergency response plans, including institutional responsibilities and jurisdictions, accident characteristics and assessment, radiological exposure control, resources, communications, medical support, notification methods and procedures, emergency response training activities, and post-accident operations.

9513384.1905

Finding of No Significant Impact
Return of Isotope Capsules to the Waste Encapsulation and Storage Facility at the Hanford Site

AGENCY: U.S. Department of Energy

ACTION: Finding of No Significant Impact

SUMMARY: The U.S. Department of Energy has prepared an Environmental Assessment, DOE/EA-0944, to assess potential environmental impacts of a proposal to return cesium and strontium capsules presently leased to private companies to the Hanford Site for storage in the Waste Encapsulation and Storage Facility.

Based on the evaluation in the Environmental Assessment, the Department of Energy has determined that the proposed action is not a major Federal action significantly affecting the quality of the human environment within the meaning of the National Environmental Policy Act of 1969, 42 U.S.C. 4321, et seq. Therefore, the preparation of an environmental impact statement is not required.

Addresses and Further Information:

Single copies of the Environmental Assessment and further information about the proposed project are available from:

Mr. J. L. Daily, Acting Division Director
Nuclear Materials Division
U.S. Department of Energy
Richland Operations Office
P.O. Box 550
Richland, Washington 99352
Phone: (509) 376-7721

For further information regarding the Department of Energy National Environmental Policy Act process, contact:

Carol M. Borgstrom, Director
Office of NEPA Oversight (EH-25)
U. S. Department of Energy
1000 Independence Avenue, S.W.
Washington, D.C. 20585
Phone: (202) 586-4600 or leave a message at (800) 472-2756

Background: Beginning in 1974, cesium-137 and strontium-90 were removed from Hanford high-level radioactive tank wastes, encapsulated in double-walled metal capsules, and stored in the Waste Encapsulation and Storage Facility on the Hanford Site. Some of these capsules were taken out of storage and sent to offsite locations for use in research and development, as well as for commercial applications. One of the capsules being utilized offsite released cesium-137 to the water in a storage basin. Since the Department of Energy is uncertain what caused the capsule to leak, the Department needs to take action to assure the remaining capsules are safely stored and managed.

Proposed action: The Department of Energy proposes to return the isotope capsules located offsite to the Waste Encapsulation and Storage Facility at the Hanford Site where any leaking capsules can be safely reencapsulated and all capsules can be stored safely until final disposal. The isotope capsules to be returned from offsite locations are located at IOTECH, Incorporated in Northglenn, CO (309 cesium capsules); Applied Radiant Energy Company in Lynchburg, VA (25 cesium capsules); and Pacific Northwest Laboratory in Richland, WA (33 cesium and 5 strontium capsules). The capsules would be tested and inspected for integrity in an environment shielded from radiation (underwater or in a hot cell) and those passing the tests and inspections

would be loaded into certified packages (up to 16 cesium capsules in one package) designed to provide radiation shielding and containment during normal transportation and under accident conditions. The packages would be transported by truck to the Hanford Site, and the packages would be unloaded and the capsules stored inside the Waste Encapsulation and Storage Facility. The storage at the Waste Encapsulation and Storage Facility would be conducted under the Department's 1987 Record of Decision for the Final Environmental Impact Statement: Disposal of Hanford Defense High-Level, Transuranic and Tank Wastes, Hanford Site, Richland, Washington.

Any capsule failing the integrity tests at the origin would be overpacked in a steel container, loaded separately into an approved package and transported to the Hanford Site. The radioisotopes would be reencapsulated at the Waste Encapsulation and Storage Facility and then stored there pending final disposition.

Alternatives considered: The Department of Energy considered alternative methods of transporting the capsules to Hanford, including air, rail and water carriage. Water carriage was found to be impractical, and air and rail carriage were found to offer no clear advantage over truck transportation.

The Department also considered a no-action alternative, which would leave the isotope capsules in their present locations. The no-action alternative would be inconsistent with the Department's commitment to return the capsules to Hanford for storage and would not allow the Department to monitor and control the integrity of the capsules.

Environmental impacts: The workers and public would be exposed to some radiation during the loading and transportation of the packages. The transportation packages would provide sufficient radiation shielding to limit exposures to workers and the public to low doses. Most of the worker exposure would be incurred while workers were in the vicinity of the transportation package while securing it to the truck. The expected exposure to each of these workers would be slightly more than 0.01 rem for the workers at IOTECH and approximately 0.001 rem for workers at Applied Radiant Energy Company. The dose to workers at the Waste Encapsulation and Storage Facility from routine operations would be too small to be measurable. It is most likely that no radiation induced health effects among workers or the public would result from these operations. The storage of the additional capsules in the Waste Encapsulation and Storage Facility is not expected to increase the dose to workers at that facility or the dose to the public due to operations of the facility. These doses would remain small. Small quantities of hazardous materials such as solvents may be generated during the proposed action, but these materials would be managed and disposed of in accordance with applicable regulations.

Radiation exposures resulting from transportation to the Hanford Site were calculated. The total dose to truck crews (2 persons) was 0.4 person-rem for all shipments, and the total public dose (about 5000 persons) was 6 person-rem. These doses are expected to result in about 2×10^{-4} cancer fatalities among workers and 3×10^{-3} cancer fatalities among members of the exposed public (i.e., no cancer fatalities) from the loading and transportation of the capsules to Hanford.

Cumulative impacts: The proposed return of isotope capsules would not have substantial cumulative impacts. The wastes generated by the packaging would be stored or disposed in existing facilities, and the return and storage of the capsules at Hanford would not substantially increase worker or public exposure to radiation.

Impacts from potential accidents: The Environmental Assessment considered a range of reasonably foreseeable accidents that might result during the transportation and storage of the capsules. These included both low probability, high consequence events and higher probability, lower consequence events.

The rupture of a strontium capsule during retrieval operations was found to result in the highest radiation dose of any event related to storage at the Waste Encapsulation and Storage Facility. The resulting 70-year committed dose for this potential accident was found to be 3×10^{-6} rem (2×10^{-9} latent cancer fatalities) for the maximally exposed individual and 1×10^{-2} rem (5×10^{-6} latent cancer fatalities) for the affected population.

The release of radioactive materials during a truck crash was analyzed. Such a release is considered unlikely, due to the design of the transportation packages. The total transportation impacts from accidents during the shipping campaign was calculated (using the RADTRAN 4 computer code) to be 2.0×10^{-4} person-rem (1×10^{-7} latent cancer fatalities).

It is most likely that none of the accidents analyzed would produce any cancer fatalities.

Determination: Based on the analysis in the Environmental Assessment, I conclude that the proposed action is not a major Federal action significantly affecting the quality of the human environment within the meaning of the National Environmental Policy Act. Therefore, an Environmental Impact Statement is not required for the proposed action.

Issued at Washington, D.C., this 11th day of May, 1994.

for Tara O'Toole, M.D., M.P.H.
Assistant Secretary
Environment, Safety and Health

EA/FONSI DISTRIBUTION LIST
DOE/EA-0942

Number of Copies	Receiving Organization	Receiving Organization's Address	Comments
6	EH-25	C. M. Borgstrom, Director Office of NEPA Oversight 1000 Independence Avenue S.W. Washington, D.C. 20585	Include a copy of the EA distribution list in the EA/FONSI package.
1	EM-331	Don Henninger, NEPA Point of Contact 12800 Middlebrook Road Germantown, Maryland 20874	
5	EM-363	J. J. Keenan, Program Manager Trevion 2 Building, U.S. Department of Energy Washington D.C. 20585-0002	
1	EM-20	R. S. Scott, Deputy Assistant Secretary Oversight and Self-Assessment 1000 Independence Ave. S.W. Washington, D.C. 20585	
5	EM-36	J. V. Antizzo, Acting Director Office of Hanford Programs 12800 Middlebrook Rd. Germantown, Maryland 20874	
1	EM-431	L. E. Harris, NEPA Point of Contact Room 202 12800 Middlebrook Rd. Germantown, Maryland 20874 Washington, D.C. 20585 Attention: EM-40	
1	EM-561	M. J. Conroy Room 452 12800 Middlebrook Road Germantown, Maryland 20874	
1	EH-11	J. D. Psaras Room D-432 19901 Germantown Road Germantown, Maryland 20585	
1	EH-22	M. H. Kleinrock Room 8H-050 1000 Independence Avenue S.W. Washington, D.C. 20585	

For additional copies of this EA, please contact T. L. Clark, Westinghouse Hanford Company, P.O. Box 1970, MSIN: H6-26, Richland, Washington 99352 (509) 376-6932.

9513384.1909

1	GC-11	J. M. Sweeny Room 6A-113 1000 Independence Avenue S.W. Washington, D.C. 20585	
1	RL	P. F. X. Dunigan, Jr. NEPA Compliance Officer MSIN: A5-15	Include a copy of the EA distribution list in the EA/FONSI package.
1	RL	S. J. Zaro Communications MSIN: A7-75	
5	RL	J. L. Daily MSIN: R3-81	
1	RL	L. D. Romine MSIN: R3-81	
1	MACTEC	D. J. Guzzetta MSIN: B1-42	
1	MACTEC	R. D. Filbert MSIN: A4-35	
1	MACTEC	R. A. Kropp MSIN: S6-81	
1	WHC	R. H. Engelmann, Manager NEPA Documentation Function MSIN: H6-26	Insert EA/FONSI package into the Function's reference file
1	WHC	M. T. Jansky, Author NEPA Documentation Function MSIN: H6-26	
1	WHC	E. D. Robbins, Manager Cesium Return Program MSIN: S6-65	
1	PNL	P. M. Daling MSIN: K8-07	
1	PNL	M. D. McKinney MSIN: K8-03	
1	PNL	Hanford Technical Library 3760 Building 300 Area - MSIN: P8-55 Richland, Washington 99352	

For additional copies of this EA, please contact T. L. Clark, Westinghouse Hanford Company, P.O. Box 1970, MSIN: H6-26, Richland, Washington 99352 (509) 376-6932.

9513384.1910

1	Ecology	NEPA Coordinator Environmental Review Section State of Washington Department of Ecology P.O. Box 47703 Olympia, Washington 98504-7703
1	Nez Perce Tribe	Ms. D. Powaukee Nez Perce Tribe P.O. Box 365 Lapwai, Idaho 83540
1	Umatilla Tribe	Mr. J. R. Wilkinson Confederated Tribes of the Umatilla Reservation P.O. Box 638 Pendleton, Oregon 97801
1	Umatilla Tribe	Mr. William H. Burke, Chair Tribal Emergency Response Committee Treasurer, Board of Trustees Confederated Tribes of the Umatilla Indian Reservation P.O. Box 638 Pendleton, Oregon 97801
1	Wanapum Indian Tribe	Mr. Rex Buck, Jr. Wanapum P.O. Box 878 Ephrata, Washington 98823
1	Yakama Indian Nation	Mr. Russell Jim Yakama Indian Nation P.O. Box 151 Toppenish, Washington 98948
1	Public	Ms. Judy McMakin Richland Public Library 955 Northgate Drive Richland, Washington 99352
1	Public	DOE Public Reading Room WSU Tri-Cities Branch MSIN: H2-53 Richland, Washington 99352
1	Public	Chief Roger W. Bruett Washington State Patrol P.O. Box 42614 Olympia, Washington 98504-2614

Please direct WHC Communications to publish an add in the local paper concerning approval of the EA/FONSI.

For additional copies of this EA, please contact T. L. Clark, Westinghouse Hanford Company, P.O. Box 1970, MSIN: H6-26, Richland, Washington 99352 (509) 376-6932.

EA/FONSI DISTRIBUTION LIST
DOE/EA-0942

1	Public	Mr. Richard C. Moore, P.E. 502 East 24th Street Cheyenne, Wyoming 82001
1	Public	Ms. Marian McDonald PRI, Box 47C North Powder, Oregon 97867
1	Public	Fuji Kreider 60366 Marvin Road La Grande, Oregon 97850
1	Public	Ms. Shelley Cimon 1208 First Street La Grande, Oregon 97850
1	Oregon Department of Energy	Mr. Ken Niles Oregon Department of Energy 625 Marion Street NE Salem, Oregon 97310
1	Virginia Department of Environmental Quality	Mr. Richard N. Burton, Director Virginia Department of Environmental Quality P.O. Box 10009 Richmond, Virginia 23240-0009
1	Virginia Department of Emergency Services	Mr. James D. Holloway Department of Emergency Services 310 Turner Road Richmond, Virginia 23225-6491
1	Central Virginia Planning District Commission	Mr. Dennis E. Gragg, Executive Director Central Virginia Planning District Commission P.O. Box 817 Lynchburg, Virginia 24505
1	Idaho Department of Health and Welfare	Mr. Steve R. Hill, Administrator Idaho Department of Health and Welfare INEL Oversight Program 1410 N. Hilton Boise, Idaho 83706
6	Western Governor's Association	Mr. Ronald Ross, Program Manager Western Governor's Association 600 17th Street, Suite 1705 South Tower Denver, Colorado 80202
1	Denver, Colorado Emergency Management Unit	Mr. Steven H. Gunderson, Director Emergency Management Unit 4300 Cherry Creek Drive South Denver, Colorado 80222-1530

For additional copies of this EA, please contact T. L. Clark, Westinghouse Hanford Company, P.O. Box 1970, MSIN: H6-26, Richland, Washington 99352 (509) 376-6932.

EA/FONSI DISTRIBUTION LIST
DOE/EA-0942

1	Public	Mr. Richard C. Moore, P.E. 502 East 24th Street Cheyenne, Wyoming 82001
1	Public	Ms. Marian McDonald PRI, Box 47C North Powder, Oregon 97867
1	Public	Fuji Kreider 60366 Marvin Road La Grande, Oregon 97850
1	Public	Ms. Shelley Cimon 1208 First Street La Grande, Oregon 97850
1	Oregon Department of Energy	Mr. Ken Niles Oregon Department of Energy 625 Marion Street NE Salem, Oregon 97310
1	Virginia Department of Environmental Quality	Mr. Richard N. Burton, Director Virginia Department of Environmental Quality P.O. Box 10009 Richmond, Virginia 23240-0009
1	Virginia Department of Emergency Services	Mr. James D. Holloway Department of Emergency Services 310 Turner Road Richmond, Virginia 23225-6491
1	Central Virginia Planning District Commission	Mr. Dennis E. Gragg, Executive Director Central Virginia Planning District Commission P.O. Box 817 Lynchburg, Virginia 24505
1	Idaho Department of Health and Welfare	Mr. Steve R. Hill, Administrator Idaho Department of Health and Welfare INEL Oversight Program 1410 N. Hilton Boise, Idaho 83706
6	Western Governor's Association	Mr. Ronald Ross, Program Manager Western Governor's Association 600 17th Street, Suite 1705 South Tower Denver, Colorado 80202
1	Denver, Colorado Emergency Management Unit	Mr. Steven H. Gunderson, Director Emergency Management Unit 4300 Cherry Creek Drive South Denver, Colorado 80222-1530

For additional copies of this EA, please contact T. L. Clark, Westinghouse Hanford Company, P.O. Box 1970, MSIN: H6-26, Richland, Washington 99352 (509) 376-6932.

EA/FONSI DISTRIBUTION LIST
DOE/EA-0942

1	Public	Mr. Richard C. Moore, P.E. 502 East 24th Street Cheyenne, Wyoming 82001
1	Public	Ms. Marian McDonald PRI, Box 47C North Powder, Oregon 97867
1	Public	Fuji Kreider 60366 Marvin Road La Grande, Oregon 97850
1	Public	Ms. Shelley Cimon 1208 First Street La Grande, Oregon 97850
1	Oregon Department of Energy	Mr. Ken Niles Oregon Department of Energy 625 Marion Street NE Salem, Oregon 97310
1	Virginia Department of Environmental Quality	Mr. Richard N. Burton, Director Virginia Department of Environmental Quality P.O. Box 10009 Richmond, Virginia 23240-0009
1	Virginia Department of Emergency Services	Mr. James D. Holloway Department of Emergency Services 310 Turner Road Richmond, Virginia 23225-6491
1	Central Virginia Planning District Commission	Mr. Dennis E. Gragg, Executive Director Central Virginia Planning District Commission P.O. Box 817 Lynchburg, Virginia 24505
1	Idaho Department of Health and Welfare	Mr. Steve R. Hill, Administrator Idaho Department of Health and Welfare INEL Oversight Program 1410 N. Hilton Boise, Idaho 83706
6	Western Governor's Association	Mr. Ronald Ross, Program Manager Western Governor's Association 600 17th Street, Suite 1705 South Tower Denver, Colorado 80202
1	Denver, Colorado Emergency Management Unit	Mr. Steven H. Gunderson, Director Emergency Management Unit 4300 Cherry Creek Drive South Denver, Colorado 80222-1530

For additional copies of this EA, please contact T. L. Clark, Westinghouse Hanford Company, P.O. Box 1970, MSIN: H6-26, Richland, Washington 99352 (509) 376-6932.

EA/FONSI DISTRIBUTION LIST
DOE/EA-0942

1	Governor, State of Illinois	The Honorable James Edgar, Governor State of Illinois Springfield, Illinois 62706
1	Iowa Department of Health	Mr. Donald A. Flater, Chief Bureau of Radiological Health Iowa Department of Public Health Lucas State Office Buildings Des Moines, Iowa 50319-0075
1	Nebraska Department of Health	Mr. Harold R. Borchert, Director Division of Radiological Health Nebraska Department of Health 301 Centennial Mall South P.O. Box 95007 Lincoln Nebraska 68509-5007
1	Wyoming Emergency Management Agency	Mr. Bob Bazak Wyoming Emergency Management Agency P.O. Box 1709 Cheyenne, Wyoming 82003-1709
1	Wyoming Department of Transportation	Mr. Keith Rounds, Public Affairs Officer Wyoming Department of Transportation 5300 Bishop Boulevard P.O. Box 1708 Cheyenne, Wyoming 82003-1708
1	Wyoming Department of Health	Mr. Bob Sherard, Personnel Manager Wyoming Department of Health 117 Hathaway Building Cheyenne, Wyoming 82002
1	Missouri Department of Natural Resources	Mr. David A. Shorr, Director State of Missouri Department of Natural Resources P.O. Box 176 Jefferson City, Missouri 65102-0176

For additional copies of this EA, please contact T. L. Clark, Westinghouse Hanford Company, P.O. Box 1970, MSIN: H6-26, Richland, Washington 99352 (509) 376-6932.