START

0025848

WHC-EP-0472-1

UC-721

Facility Effluent Monitoring Plan for the 284-E and 284-W Power Plants

J. M. Nickels
D. R. Herman

Date Published
November 1992

9 3 1 2 8 5 4 1 9 1 4

Prepared for the U.S. Department of Energy
Office of Environmental Restoration
and Environmental Management

Westinghouse Hanford Company
P.O. Box 1970
Richland, Washington 99352

Hanford Operations and Engineering Contractor for the
U.S. Department of Energy under Contract DE-AC06-87RL10930

FEB 1993
RECEIVED
EDMC

Approved for Public Release

LEGAL DISCLAIMER

This report was prepared as an account of work sponsored by an agency of the United States Government. Neither the United States Government nor any agency thereof, nor any of their employees, nor any of their contractors, subcontractors or their employees, makes any warranty, express or implied, or assumes any legal liability or responsibility for the accuracy, completeness, or any third party's use or the results of such use of any information, apparatus, product, or process disclosed, or represents that its use would not infringe privately owned rights. Reference herein to any specific commercial product, process, or service by trade name, trademark, manufacturer, or otherwise, does not necessarily constitute or imply its endorsement, recommendation, or favoring by the United States Government or any agency thereof or its contractors or subcontractors. The views and opinions of authors expressed herein do not necessarily state or reflect those of the United States Government or any agency thereof.

This report has been reproduced from the best available copy.

Printed in the United States of America

DISCLM-2.CHP (1-91)

Document Title: Facility Effluent Monitoring Plan for the 284-E and 284-W Power Plants

Prepared by:

D R Herman — 9/15/92
D. R. Herman
Plant Engineer
Date

J M Nickels — 9/8/92
J. M. Nickels
Principal Engineer
Regulatory Analysis
Date

Approved by:

A. Greenberg — 9-24-92
A. Greenberg, Manager
200 Area Steam and
Water Utilities
Date

L. P. Diediker — 10-5-92
L. P. Diediker, Manager
200 Area Environmental Protection
Date

aw 10/28/92 D G Farwick — 10/28/92
D. G. Farwick, Manager
Environmental Quality Assurance
Date

Roger J Landon — 11/10/92
R. J. Landon, Manager
Regulatory Analysis
Date

9 3 1 2 8 5 4 1 9 1 6

THIS PAGE INTENTIONALLY
LEFT BLANK

FACILITY EFFLUENT MONITORING PLAN FOR THE 284-E AND 284-W POWER PLANTS

J. M. Nickels

ABSTRACT

A facility effluent monitoring plan is required by the U.S. Department of Energy in DOE Order 5400.1 for any operations that involve hazardous materials and radioactive substances that could impact employee or public safety or the environment. A facility effluent monitoring plan determination was performed during calendar year 1991 and the evaluation requires the need for a facility effluent monitoring plan. This document is prepared using the specific guidelines identified in A Guide for Preparing Hanford Site Facility Effluent Monitoring Plans, WHC-EP-0438**. This facility effluent monitoring plan assesses effluent monitoring systems and evaluates whether they are adequate to ensure the public health and safety as specified in applicable federal, state, and local requirements.*

This facility effluent monitoring plan shall ensure long-range integrity of the effluent monitoring systems by requiring an update whenever a new process or operation introduces new hazardous materials or significant radioactive materials. This document must be reviewed annually even if there are no operational changes, and it must be updated as a minimum every three years.

---

*General Environmental Protection Program, *DOE Order 5400.1, U.S. Department of Energy, Washington, D.C., 1988.*

**A Guide for Preparing Hanford Site Facility Effluent Monitoring Plans, *WHC-EP-0438, Westinghouse Hanford Company, Richland, Washington, 1991.*

9 3 1 2 8 5 4 1 9 1 7

This facility effluent monitoring plan has been revised to include Department of Energy/Westinghouse Hanford Regulatory Analysis comments, procedure changes (revisions).

9 3 1 2 8 6 4 1 9 1 8

CONTENTS

1.0 INTRODUCTION 1-1
1.1 POLICY 1-1
1.2 PURPOSE 1-1
1.3 SCOPE 1-1
1.4 DISCUSSION 1-2

2.0 FACILITY DESCRIPTION 2-1
2.1 PHYSICAL DESCRIPTION 2-1
2.1.1 Ancillary Systems Description 2-2
2.2 PROCESS DESCRIPTION 2-5
2.3 IDENTIFICATION AND CHARACTERIZATION OF POTENTIAL SOURCE TERMS 2-11

3.0 APPLICABLE REGULATIONS 3-1
3.1 PROTECTION OF THE PUBLIC AND THE ENVIRONMENT 3-1
3.2 FACILITY EFFLUENT MONITORING PLAN REQUIREMENTS 3-1
3.3 AIR EMISSIONS 3-5
3.4 LIQUID EFFLUENTS 3-5

4.0 IDENTIFICATION AND CHARACTERIZATION OF EFFLUENT STREAMS 4-1
4.1 IDENTIFICATION AND CHARACTERIZATION OF SOURCE TERMS CONTRIBUTING TO EACH EFFLUENT STREAM 4-1
4.1.1 Liquid Effluent 4-1
4.1.2 Air Emissions 4-2
4.1.3 Routine Operating Conditions 4-2
4.1.4 Upset Operating Conditions 4-3

5.0 EFFLUENT POINT OF DISCHARGE DESCRIPTION 5-1
5.1 LIQUID EFFLUENT 5-1
5.2 AIR EMISSIONS 5-1

6.0 EFFLUENT MONITORING/SAMPLING SYSTEM DESIGN CRITERIA 6-1

7.0 CHARACTERIZATION OF CURRENT ENVIRONMENTAL MONITORING SYSTEM 7-1
7.1 AIR EMISSIONS 7-1
7.2 INSTRUMENTATION DESCRIPTION 7-1
7.2.1 Air Emissions 7-1
7.2.2 Liquid Effluents 7-2
7.3 TECHNICAL SPECIFICATIONS PERTAINING TO ENVIRONMENTAL MONITORING SYSTEM 7-2

8.0 HISTORICAL MONITORING/SAMPLING DATA FOR EFFLUENT STREAMS 8-1

9.0 SAMPLE ANALYSIS 9-1
9.1 U.S. DEPARTMENT OF ENERGY ANALYTICAL AND LABORATORY GUIDELINES 9-1
9.2 SAMPLE AND DATA CHAIN OF CUSTODY 9-1

10.0 NOTIFICATIONS AND REPORTING REQUIREMENTS 10-1
10.1 ENVIRONMENTAL OCCURRENCE 10-1
10.2 PERIODIC ROUTINE EFFLUENT MONITORING REPORTS 10-1

9 3 1 2 8 6 4 1 9 1 9

CONTENTS (continued)

11.0 INTERFACE WITH THE OPERATIONAL ENVIRONMENTAL SURVEILLANCE PROGRAM 11-1
11.1 DESCRIPTION 11-1
11.2 PURPOSE 11-1
11.3 BASIS 11-1
11.4 MEDIA SAMPLED AND ANALYSES PERFORMED 11-2
11.5 LOCATIONS 11-2
11.6 PROGRAM REVIEW 11-2
11.7 SAMPLER DESIGN 11-2
11.8 COMMUNICATION 11-2
11.9 REPORTS 11-3

12.0 QUALITY ASSURANCE 12-1
12.1 INTERNAL QUALITY CONTROL 12-1

13.0 INTERNAL AND EXTERNAL PLAN REVIEW 13-1

14.0 COMPLIANCE ASSESSMENT 14-1
14.1 LIQUID EMISSIONS 14-1
14.1.1 Mercury Instruments 14-1
14.2 AIR EMISSIONS 14-2

15.0 SUMMARY AND CONCLUSIONS 15-1

16.0 ATTACHMENTS 16-1
16.3 GLOSSARY 16-6

9 3 1 2 8 5 4 1 9 2 0

LIST OF FIGURES

2-1 Aerial View of 284-E Power Plant 2-3

2-2 Building Schematics--284-W Power Plant 2-4

2-3 Typical Ion-Exchange Unit 2-6

2-4 Basic Flowchart--Water Pretreatment 2-7

2-5 284-W Power Plant Boiler Feedwater System 2-8

2-6 284-E Power Plant Boiler Feedwater System 2-9

5-1 284-W Power Plant Flow Schematic 5-2

5-2 284-E Power Plant Flow Schematic 5-3

LIST OF TABLES

2-1 Testing Requirements Boiler Chemistry 2-10

2-2 Reportable Quantities 2-12

2-3 Hazardous Chemicals Inventory at Risk 2-12

2-4 Hazardous Substances 2-13

6-1 Opacity Monitor Performance Characteristics 6-2

8-1 Liquid Effluent and Emissions from the Power Plant Stack 8-2

8-2 Ash Analyses 8-2

8-3 Source Testing Emission Results, 284-W Power Plant, 200 West Area 8-3

8-4 Source Testing Emission Results, 284-E Power Plant, 200 East Area 8-4

9-1 Laboratory Procedures 9-2

9-2 Data Analyses and Statistical Treatment 9-3

9 3 1 2 8 6 4 1 9 2 1

This page intentionally left blank.

9 3 1 2 8 6 4 1 9 2 2

LIST OF TERMS

ALARA	as low as reasonably achievable
APCA	Air Pollution Control Authority
BAT	best available technology
BPCT	best practicable control technology
CERCLA	*Comprehensive Environmental Response, Compensation, and Liability Act of 1980*
CFR	Code of Federal Regulations
DOE	U.S. Department of Energy
DW	dangerous waste
Ecology	Washington State Department of Ecology
EDE	effective dose equivalent
EP	Environmental Protection
EPA	U.S. Environmental Protection Agency
FEMP	facility effluent monitoring plan
HEHF	Hanford Environmental Health Foundation
HEPA	high-efficiency particulate air (filter)
NESHAP	National Emission Standards for Hazardous Air Pollutants
ONC	Occurrence Notification Center
OSM	Office of Sample Management
PNL	Pacific Northwest Laboratory
QA	quality assurance
QC	quality control
RL	U.S. Department of Energy, Richland Field Office
RQ	reportable quantities
SAP	sample analysis plan
S&WU	Steam and Water Utilities Operation
TLD	thermoluminescent dosimeter
Tri-Party Agreement	*Hanford Federal Facility Agreement and Consent Order*
UST	underground storage tank
WAC	Washington Administrative Code
Westinghouse Hanford	Westinghouse Hanford Company

9 3 1 2 3 6 4 1 9 2 3

This page intentionally left blank.

9 3 1 2 3 5 4 1 9 2 4

FACILITY EFFLUENT MONITORING PLAN FOR THE 284-E AND 284-W POWER PLANTS

1.0 INTRODUCTION

The U.S. Department of Energy (DOE) has recently issued new requirements for complying with DOE and other federal agency environmental regulations. The DOE 5400 Series of orders require environmental monitoring plans (EMP) for each site, facility, or process that uses, generates, releases, or manages significant pollutants of radioactive and hazardous material.

This Facility Effluent Monitoring Plan (FEMP) for the 284-E and 284-W Power Plants shall provide sufficient information on the effluent characteristics and the monitoring system so that a compliance assessment against requirements may be performed.

This plan is intended to be a stand-alone document with limited effluent data and information incorporated by reference. This document was prepared according to the Westinghouse Hanford Company (Westinghouse Hanford) preparation guide for FEMPs, WHC-EP-0438, (WHC 1991a) by the 200 Area Steam and Water Utilities (S&WU) Organization.

9 3 1 2 3 6 4 1 9 2 5

1.1 POLICY

It is the policy of the DOE and Westinghouse Hanford to conduct effluent monitoring that is adequate to determine whether the public and the environment are adequately protected during DOE operations and whether operations are in compliance with DOE orders, applicable federal, state, and local regulations to ensure that an acceptable level of risk to the public and the environment posed by the S&WU Operations is not exceeded. It is also DOE and Westinghouse Hanford policy that effluent monitoring programs meet high standards of quality and credibility.

1.2 PURPOSE

This plan fulfills DOE requirements stated in DOE Order 5400.1 (DOE 1988a) for a FEMP for each facility that contains radioactive or hazardous pollutants that could impact the public, employee safety, and the environment. Westinghouse Hanford will implement these policies via *Environmental Compliance*, WHC-CM-7-5 (WHC 1991b).

1.3 SCOPE

This document includes plans for sampling, monitoring, and characterizing potential nonradioactive hazardous materials/substances discharged from the S&WU 200 Area operation effluent.

This plan shall utilize various methods such as best practical control technology currently available or other technology-based criteria, a proposed sampling plan, and process knowledge in determining that effluent release limits for liquid effluents and airborne effluents are not exceeded.

There are no radioactive materials used or introduced into operations at the S&WU facilities. Therefore, radioactive liquid effluents and/or radioactive airborne emissions will not be addressed. This FEMP will address only the nonradioactive discharges (i.e., wastewater and air emission) to the S&WU 200 Area operations effluent.

1.4 DISCUSSION

The characterization of the potential nonradioactive constituents in the S&WU effluent streams provides the underlying rationale for the preparation of the sampling and monitoring program. The method of characterization discussed in this plan identifies those potential pollutants at the point of generation and tracks the constituents in effluent streams as they move from their generation point to the point of discharge.

Engineering barriers and/or emission control systems that reduce the levels of the constituents in the effluent stream will be discussed using sampling data, operational data, vendor specifications, and Material Safety Data Sheets where available.

Characterization of dangerous waste (DW) pollutants at the point of discharge is required by Title 40, Code of Federal Regulations (CFR), Part 261.3(b) (EPA 1991a). This requirement is only for DW as defined by the Washington Administrative Codes (WAC). Other regulations (found in Section 3.0) provide guidance on the adequacy of effluent monitoring. However, all potential pollutants shall be characterized at the point of generation for two reasons; to assess the preventive capabilities of engineered and administrative barriers, as well as the potential consequences of an upset release caused by failure of one of these barriers, and to verify and identify where the sampling and proposed or existing monitoring program addresses all pertinent constituents at the point of discharge.

To the best of our knowledge, radioactive materials have not been discharged to the power plants septic system. A further discussion of the sewer systems used in the power plants shall be addressed in Section 2.2 of this document.

9 3 1 2 8 5 4 1 9 2 6

2.0 FACILITY DESCRIPTION

The 284-E Power Plant uses three Erie City boilers, and two Riley Stoker Corporation RX boilers. A backup oil-fired packaged boiler is no longer used.

The 284-W Power Plant uses four Erie City boilers.

Six of the Erie City boilers are 1943 vintage; the seventh Erie City boiler was installed at the 284-W Power Plant in 1948. All units are water-tube, stoker-fired, three-drum Sterling-type boilers using the dumping grate method for ash removal. Rated capacity is 32 t (70,000 lb)/h continuous steam, and the boilers have a peak capacity of 36 t (80,000 lb)/h continuous steam for 24 h.

The two RX boilers were constructed in 1954 and are stoker-fired, water-tube designs with a traveling grate that discharges ash into the ash hopper at the front of the boiler.

Facility management derated all boilers to 29 t (65,000 lb)/h to establish and ensure a safety margin during operations.

The buildings, structures, or special facilities that are included as part of this document are the same for both the 284-E and 284-W Power Plant facilities except where noted. The ancillary systems are described in Section 2.1.1 of this document.

2.1 PHYSICAL DESCRIPTION

The 284-E Power Plant and ancillary systems are located in the 200 East Area. The 284-W Power Plant and ancillary systems are located in the 200 West Area. Both facilities are on the Hanford Site, located in the south-central region of Washington State.

The power plants are five-story steel-frame concrete-block windowless structures. Included with each building is a coal storage pit, coal unloading hoppers, conveyer belt inclines, switch and crusher houses, brine pit, ash disposal pit, two stacks, and bag houses. The 284 East Building has a coal storage silo that is no longer used.

Located on the ground floor (auxiliary) is the emergency generator, chemical injection pumps, boiler feed pumps, ash pits, air compressors, ash handling pumps. The maintenance shop, locker, and shower rooms are located on the auxiliary floor. The ion resin exchange tanks for water softener regeneration are also located on the auxiliary floor.

The chemical storage room, battery and dc generator room, flash tank, heat exchanger, steam manifolds, forced draft fans, boiler control panels, and stokers are located on the second floor.

9 3 1 2 8 6 4 1 9 2 7

The third floor is at the lower drum level and gives access to the flight conveyer, deaerator, and damper power cylinders. The fourth floor is at the upper drum level. The fifth floor is above the coal bunkers and contains the No. 4 coal belt and belt tripper car.

The 284-E Power Plant and ancillary systems are east of the filter plant and raw water pump house and reservoir (Figure 2-1).

The 284-W Power Plant and ancillary systems are south of the filter plant and raw water pump house and reservoir (Figure 2-2).

2.1.1 Ancillary Systems Description

2.1.1.1 Bag houses. The 284-E Power Plant is equipped with three bag houses with six modules per bag house with 858 filter bags per bag house. The 284-W Power Plant is equipped with two bag houses with five modules per bag house with 715 filter bags per bag house. (See Section 4.1 for additional information.)

2.1.1.2 Stacks. Stacks are 76 m (250 ft) high, 2.7 m (9 ft) inside diameter at the top, and 4.8 m (16 ft) 16.5 cm (6.5 in.) inside diameter at the bottom. Each stack has two breaching openings approximately 1.5 m (5 ft) by 3.3 m (11 ft). The stacks are brick lined from 1.2 m (4 ft) below the breaching to 46 m (150 ft) above the breaching. The stacks are constructed of concrete and designed to withstand 161 km (100 mi)/h wind. (See Section 4.1 for additional information.)

2.1.1.3 Brine (Salt) Pit. The brine pit is built in three compartments: two dissolving pits and one pump pit. Each dissolving pit is 2.4 m (8 ft) wide by 4.3 m (14 ft) long by 2.4 m (8 ft) 15.2 cm (6 in.) deep with a common separating wall between the two. The walls are 30-cm (1-ft)-thick reinforced concrete. The pump room is approximately 2.1 m (7 ft) by 3.0 m (10 ft) and houses the two transfer pumps and an electric sump pump. (See Sections 2.2 and 4.1 for additional information.)

2.1.1.4 Ash Disposal Basin. An old borrow pit located behind the power plant functions as the receiving site for the power plant sluicing operation. (See Sections 2.2 and 5.0 for process description.)

2.1.1.5 Ash Handling System. The ash handling system consists of two ash pumps, hydrojet sluicing assemblies, sluice pump, and a system of transport ditches and special piping. (See Sections 2.2 and 5.0 for additional information.)

2.1.1.6 Chemical Mixing Room and Equipment. Four mixing tanks, piping, and positive displacement injection pumps make up the chemical mixing equipment. (See Section 2.2 for additional information.)

2.1.1.7 Ion Exchange Regeneration Tanks. The ion exchange regeneration tanks are three tanks with associated piping. (See Sections 2.2 and 4.1 for additional information.)

9 3 1 2 8 6 4 1 9 2 8

Figure 2-1. Aerial View of 284-E Power Plant.

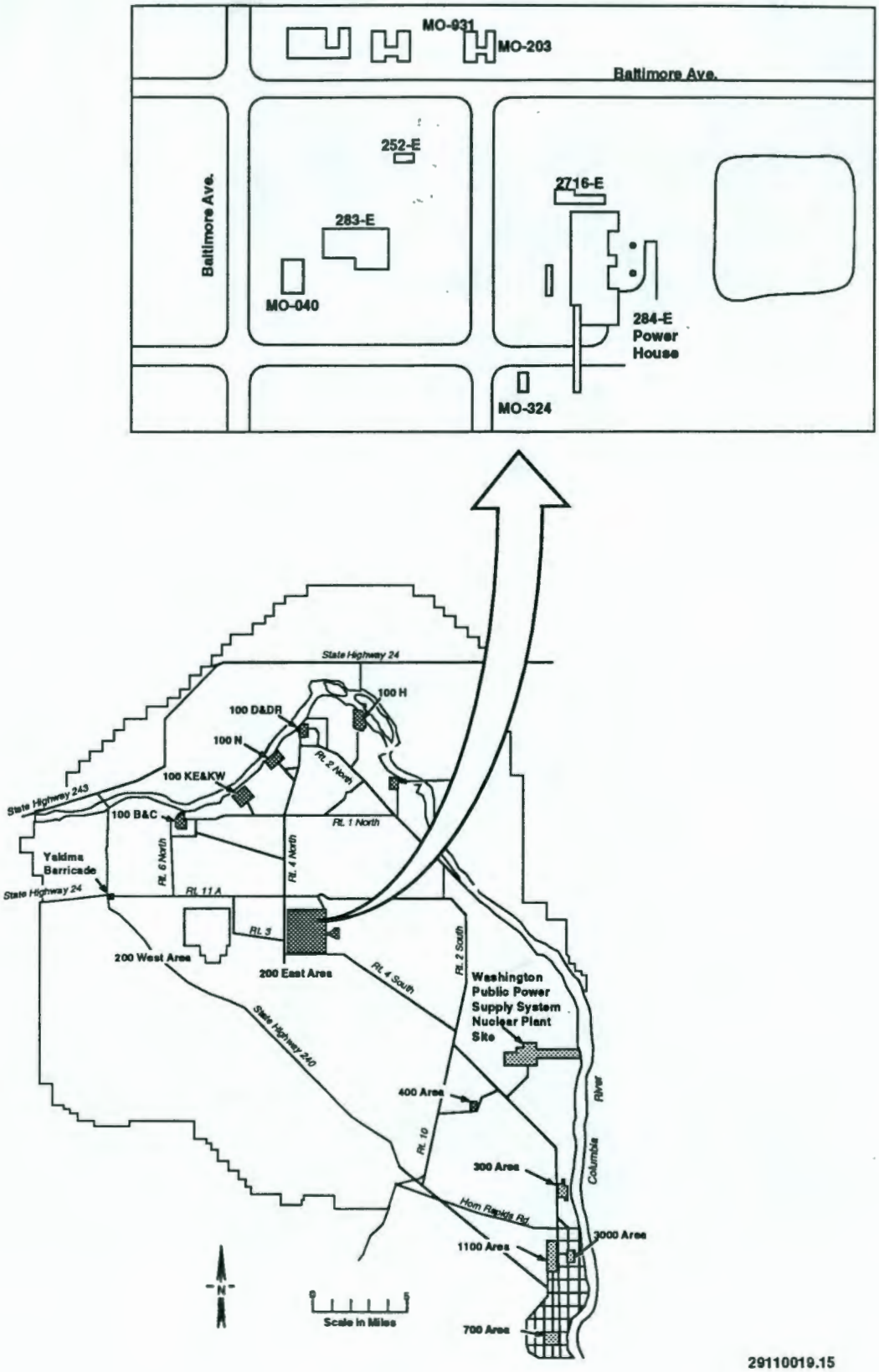

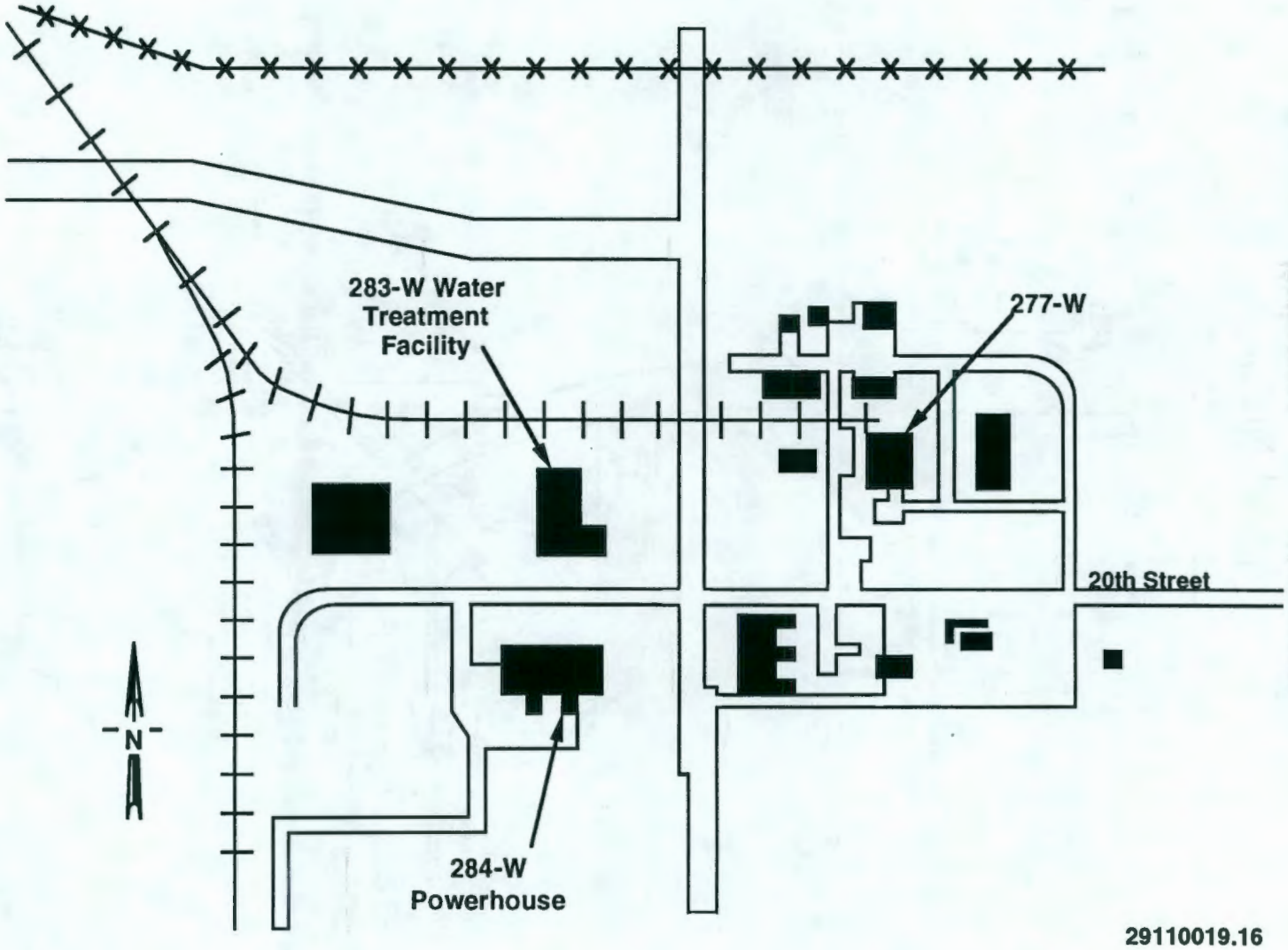

Figure 2-2. Building Schematics--284-W Power Plant.

2.2 PROCESS DESCRIPTION

The 284-E and 284-W Power Plants are coal-fired plants used to generate steam. Electricity is not generated at these facilities. The maximum production of steam is approximately 159 t (175 tons)/h at 101 kg (225 lb)/in^2. Steam generated at these facilities is used in other process facilities (i.e., the B Plant, Plutonium-Uranium Extraction Plant, 242-A Evaporator) for heating and process operations. The functions or processes associated with these facilities do not have the potential to generate radioactive airborne effluents or radioactive liquid effluents; therefore, radiation monitoring equipment is not used on the discharge of these streams. The functions or processes associated with the production of steam result in the use, storage, management, and disposal of hazardous materials.

The chemical feed system is routinely used during operations to chemically adjust or balance boiler water to prevent scale formation and inhibit corrosion. Sodium zeolite softener ion exchange units (Figure 2-3) are utilized for water softening, the process whereby Ca^{++} and magnesium Mg^{++2} salts are chemically removed. Figure 2-4 (information only) is a basic flow diagram of a water pretreatment system that includes most of these processes. Boiler chemistry control is established by the use of intermittent blowdowns every 4 to 8 h, or when the boiler is idle or on low steaming rate. These blowdowns automatically keep boiler water within desired analysis limits. Continuously removing a small stream of boiler water keeps the concentrations relatively constant. (See Figures 2-5 and 2-6 for feedwater system flow.)

Feedwater chemistry control is needed to determine operating limits for the boilers within the power plant. Table 2-1 outlines the various testing requirements and what they pertain to.

Various reagents are used to control the chemistry of the boiler water. Predesignation of the reagents hazardous constituents were evaluated by the Westinghouse Hanford Solid Waste Engineering group. It was determined that the reagents were nonregulated for disposal purposes. [See WHC-EP-0440, *Facility Effluent Monitoring Plan Determination for the 200 Area Facilities* (WHC 1991c).]

Sluicing is performed during boiler operations to remove bottom ash that is left over after the fuel is burned in the boilers. Bottom ash is the solid, or sometimes molten, material that falls to the bottom of the boiler during combustion. The ash from the furnace is dumped periodically to the ash pits below the furnace grates. Once a day the ashes are removed by sluicing with a high-pressure stream of raw water. The ash is then carried by the water into a trench and sent to the ash pumps, which transfer the water and ash (slurry) to the ash disposal ponds. Hydrojet sluicing assemblies are located at each set of boiler ash pits and one at each stack. They can remove ash at the rate of 0.9 t (1 ton)/min. This effluent stream is nonregulated under 40 CFR 261(4)(b)(6) for hazardous waste exclusions (EPA 1991a). However, this effluent stream has been identified as a solid waste under WAC-173-304 (Ecology 1991a), "Solid Waste Regulations," as part of the *Hanford Federal Facility Agreement and Consent Order*, (Tri-Party Agreement) (Ecology et al. 1991) plan for permitting of Hanford Site miscellaneous streams (see Section 3.4) (see Attachment B).

9 3 1 2 8 6 4 1 9 3 1

Figure 2-3. Typical Ion-Exchange Unit.

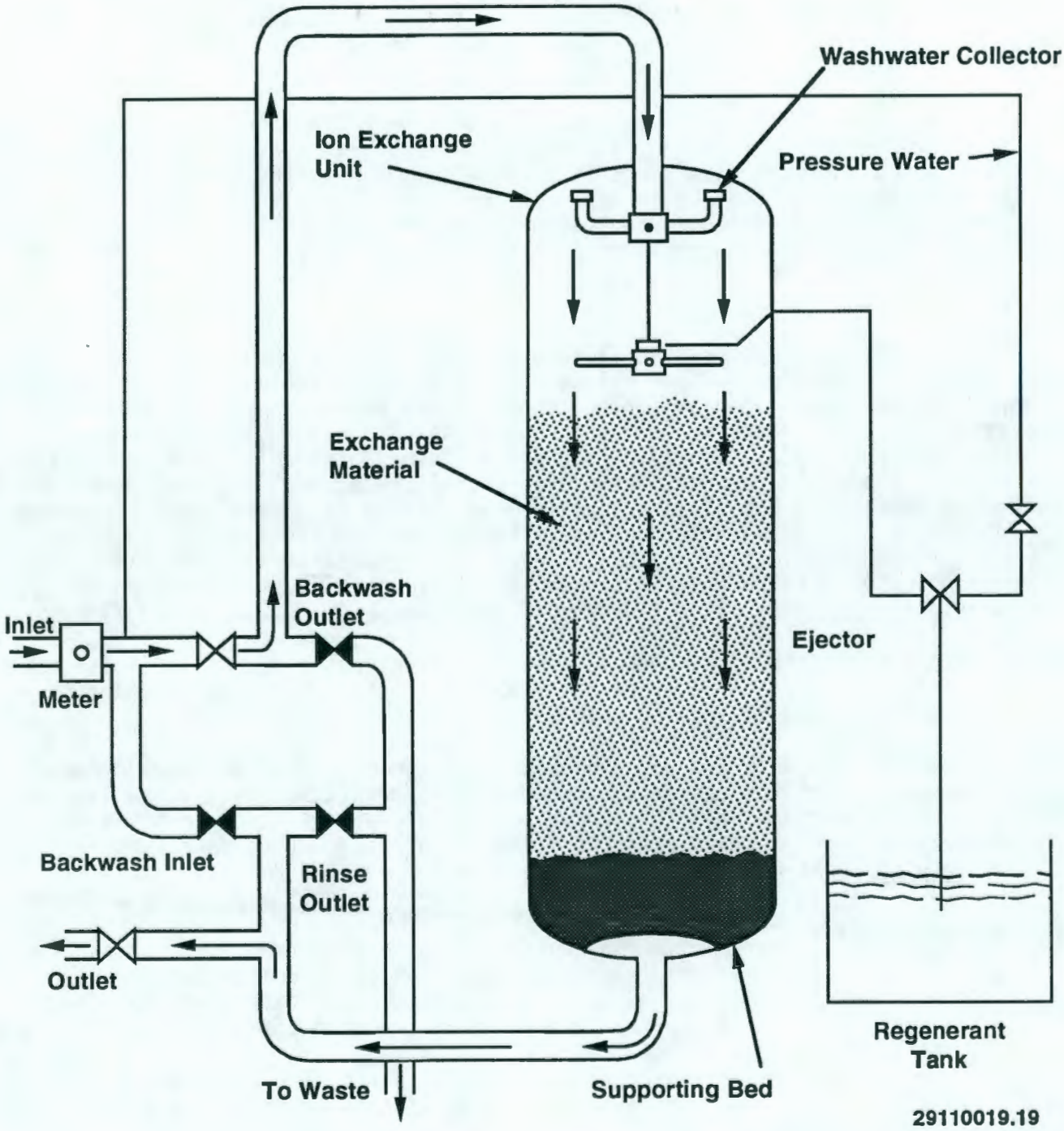

9 3 1 2 8 5 4 1 9 3 2

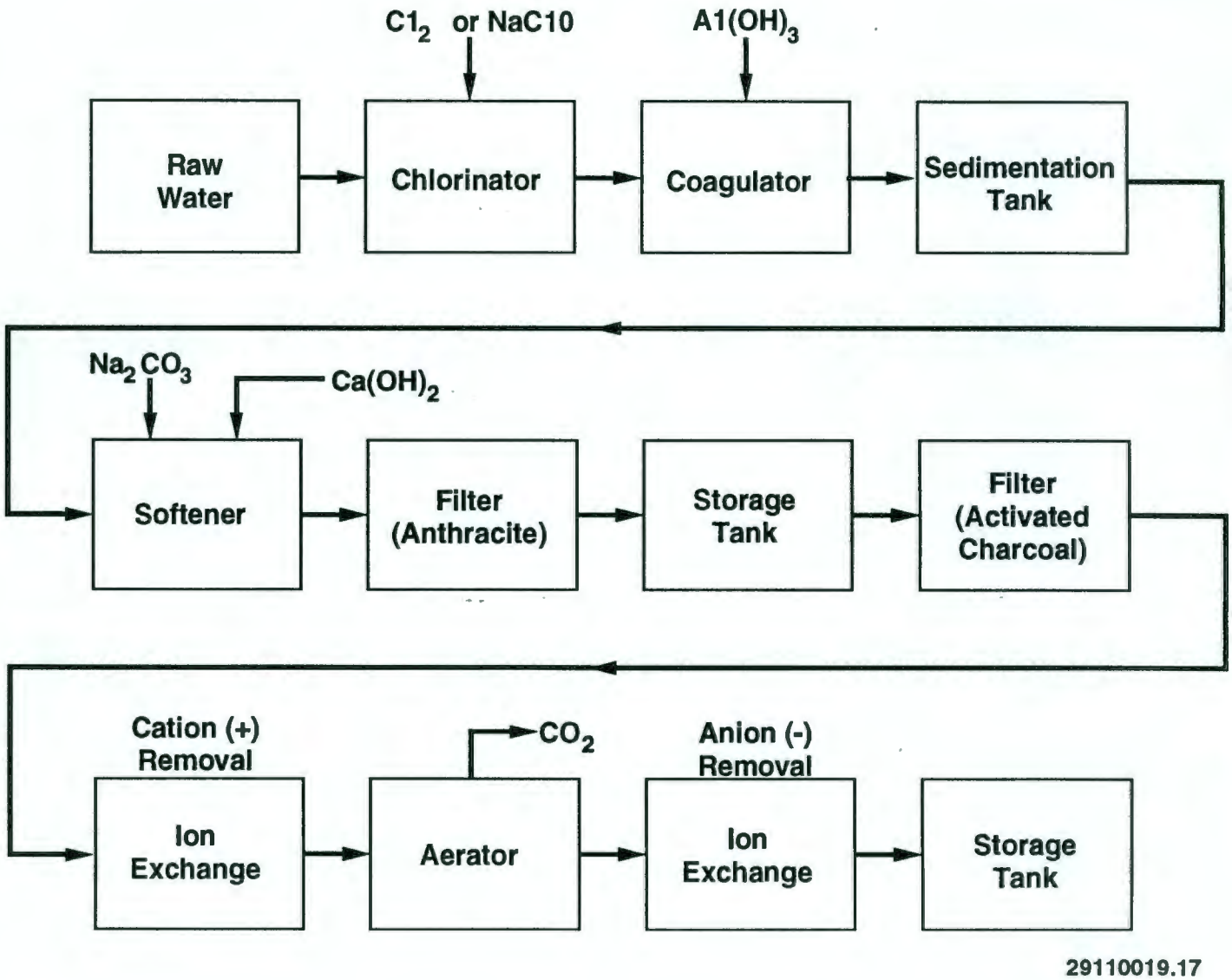

Figure 2-4. Basic Flowchart--Water Pretreatment.

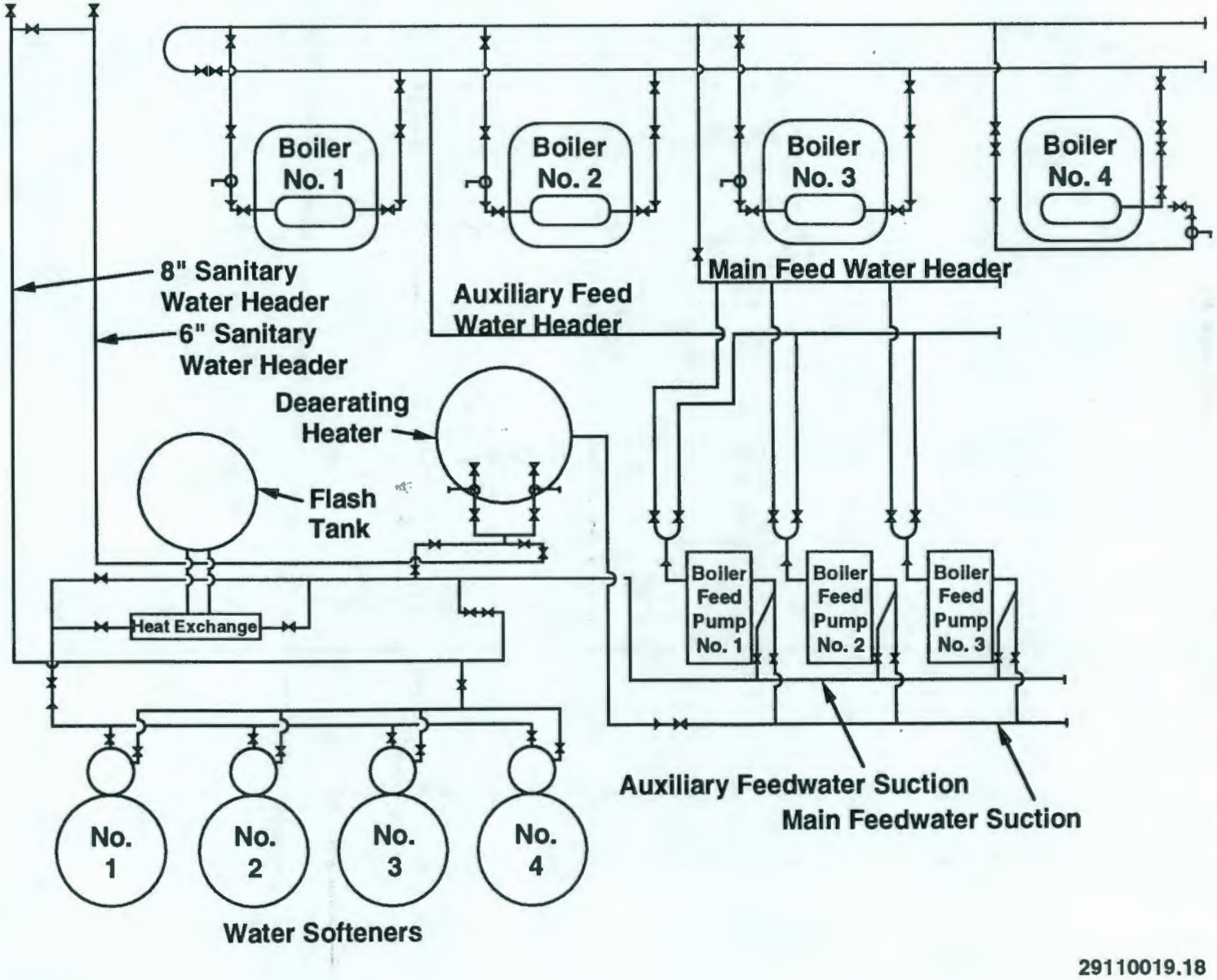

Figure 2-5. 284-W Power Plant Boiler Feedwater System.

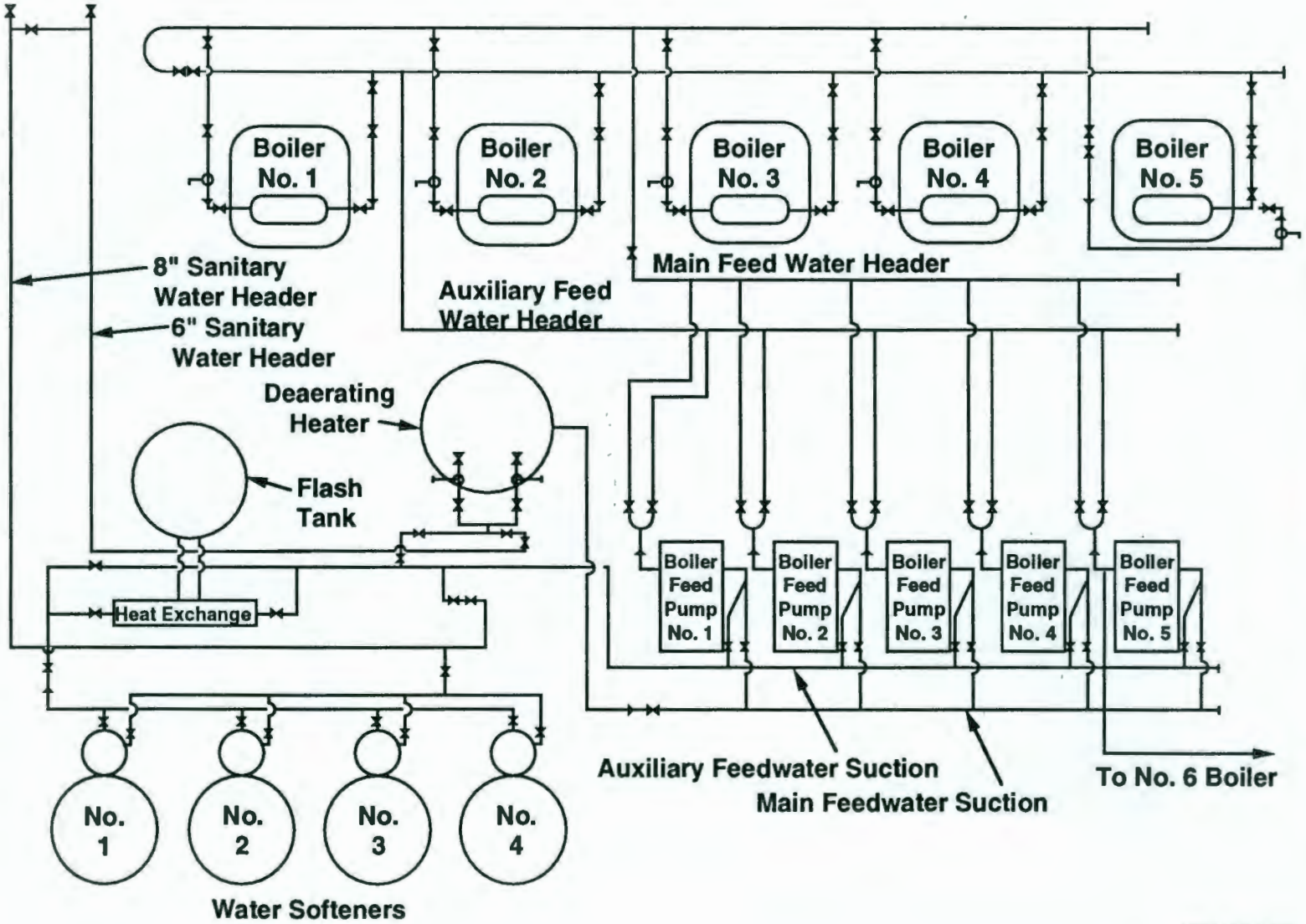

Figure 2-6. 284-E Power Plant Boiler Feedwater System.

Table 2-1. Testing Requirements Boiler Chemistry.

Parameter Controlled	Reason for Control	Method of Control
Dissolved oxygen	To inhibit corrosion	Deaeration Sulfite addition
Dissolved carbon dioxide	To maintain pH	Deaeration
Sulfites	To scavenge oxygen Removal of CL_2 before ion exchange	Sulfite addition Boiler blowdown
Conductivity	To minimize scale formation To indicate increased corrosion	Ion exchange Boiler blowdown
Total dissolved solids	To minimize scale formation To indicate increase corrosion To monitor effectiveness of demineralizer	Ion exchange Boiler blowdown Hydroxide addition
Calcium and magnesium hardness	To reduce hardness of the water	Ion exchange

9 3 1 2 8 6 4 1 9 3 6

The 284 Building is serviced by three different sewer systems:

1. One 10.2-cm (4-in.)-diameter and one 15.2-cm (6-in.)-diameter connection to the sanitary sewer from opposite ends of the building to the service area sewer.

2. One 38.1-cm (15-in.)-diameter and one 30.5-cm (12 in.)-diameter connection to the process sewer to the open ditch.

3. An 20.3-cm (8-in.)-diameter sewer to the ash disposal basin.

Liquid effluent discharge points are described in Section 5.0 of this document.

2.3 IDENTIFICATION AND CHARACTERIZATION OF POTENTIAL SOURCE TERMS

This section provides information on identifying and characterizing potential process source terms present in the S&WU operations. This is based on the list of nonradioactive hazardous materials with the potential of exceeding the reportable quantities (RQ) specified in 40 CFR 302.4 (EPA 1991b) and presented in Table 2-2.

The reported regulated chemicals, less than 15% potassium hydroxide and 5% sodium hydroxide, listed in WHC-EP-0440 (WHC 1991c) have been replaced with a polymer that contains less than 4% potassium hydroxide. Therefore, the potential discharge to the environment of the afore mentioned chemicals has been eliminated from the facilities. Based on these criteria, a solution using this chemical must exceed 10% (wt%) before it would become regulated for its toxicity as waste if discharged from the effluent.

The facility inventory at risk for liquid release, subject to the WHC-EP-0440, is listed in Table 2-3.

The potential exposures that may occur at a facility must also be considered. It is often impossible to identify every toxic substance that exists, certain types of hazardous substances or chemicals are more likely to be present than others. Some of these substances, chemicals, and compounds are listed in Table 2-4.

9 3 1 2 8 6 4 1 9 3 7

Table 2-2. Reportable Quantities.

Regulated Material	Quantity kg (lb)	Quantity Released kg (lb)	Reportable Quantity kg (lb)	% of Reportable Quantity/yr
<4% Potassium hydroxide	680.4 (1,500)	None	*	0
Sodium chloride	45,428 (100,150)	<54 (<120)	*	0
Mercury	32.6 (72)	Unknown	0.45 (1)	0

*No *Comprehensive Environmental Response, Compensation, and Liability Act of 1980/Resource Conservation and Recovery Act of 1976* reportable quantity (WAC 173-303-101, Dangerous Waste Regulations, Toxic Waste D NIOSH Registry LD50) (Ecology 1991b).

Table 2-3. Hazardous Chemicals Inventory at Risk.

Product Name	Used for	Hazardous Ingredient
Alum	Flocculent	Aluminum sulfate
Brine (salt)	Water softener	Sodium chloride
Coal	Steam production	Coal dust
Chlorine	Disinfectant	Chlorine gas
Dearborn* 4812 (in drums)	Boiler water treatment	<5% Sodium hydroxide <25% EDTA, tetra-sodium
Lead	Pump gaskets, valve packing	Lead
Mercury	Instruments	Mercury (metallic)
Polyquest* 683 (in drums)	Boiler water treatment	<4% Potassium hydroxide
Sulfuric acid	Battery banks	Sulfuric acid

*Dearborn and Polyquest are trademarks of W. R. Grace and Company.
NOTE: Dearborn 4812 was discontinued in 1990.

9 3 1 2 8 6 4 1 9 3 8

Table 2-4. Hazardous Substances.

Hazardous Substance or Chemical Group	Compounds	Users
Aromatic Hydrocarbons	Benzene Ethyl benzene Toluene Xylene	Commercial solvents
Asbestos (or asbestiform particles)	Asbestos - friable compounds	Insulation, fireproof Building, construction, pipes and ducts for water, air, and chemicals
Halogenated Aliphatic Hydrocarbons	Carbon tetrachloride Chloroform Ethyl bromide Methyl chloride Methyl chloroform Methylene chloride Letrachloroethane Letrachloroethylene (perchloroethylene) Trichloroethylene Vinyl chloride	Commercial solvents and intermediates in organic synthesis
Heavy metals	Arsenic Beryllium Cadmium Lead Mercury	Wide variety of industrial and commercial uses

9 3 1 2 8 5 4 1 9 3 9

This page intentionally left blank.

9 3 1 2 3 6 4 1 9 4 0

3.0 APPLICABLE REGULATIONS

This section presents information on the regulations governing effluent monitoring requirements for nonradioactive hazardous effluents and the applicable environmental standards statutes.

Regulations pertaining to effluent releases at the Hanford Site have been developed by several regulatory agencies including the U.S. Environmental Protection Agency (EPA), DOE, Washington State Department of Ecology (Ecology), and the Benton-Franklin-Walla Walla Counties Air Pollution Control Authority (APCA). Westinghouse Hanford has documented the policies for compliance in *Environmental Compliance*, WHC-CM-7-5 (WHC 1991b).

Table 3-1 is a brief synopsis of the applicable regulations. Regulations specific to this FEMP also can be found in Section 16.2.

3.1 PROTECTION OF THE PUBLIC AND THE ENVIRONMENT

To ensure the health and safety of the public, DOE-controlled facilities are required to monitor effluents that have the potential to contain regulated pollutants. Regulations pertaining to the monitoring and environmental surveillance requirements of effluents are based on and determined frequently by the effluent release limits for that material. Monitoring requirements and associated limitations may also be based on best available technology (BAT), best practicable control technology (BPCT) currently available, or other technology criteria. Some monitoring requirements and associated limitations are based on environmental protection criteria, such as water quality-based discharge standards. The effluent release limits for nonradioactive materials are designed to ensure that an acceptable level of risk to the public and the environment posed by these facilities is not exceeded.

The *National Emission Standards for Hazardous Air Pollutants* (NESHAP) (EPA 1991c) effluent release limits for benzene and radioactive materials are based on limiting risk to the public by limiting the potential dose to the minimally exposed member of the public. Similarly, for most nonradioactive materials, the risk to the public and environment is controlled by limiting the quantities of the materials released.

Nonradioactive effluents monitoring requirements may also exist at the point of generation for the protection of the worker. To provide a safe workplace environment, monitoring of a nonradioactive effluents is based on the level or quantity of the material present at the point of generation at the facility. An accurate method for projecting from the inventory at risk to the estimated release source term at the discharge point does not exist.

3.2 FACILITY EFFLUENT MONITORING PLAN REQUIREMENTS

Requirements for a FEMP are provided in DOE Order 5400.1, *General Environmental Protection Program* (DOE 1988a). The order provides specific information in Chapter IV on the requirements for effluent monitoring systems

Table 3-1. Applicable Regulations and Standards.

Agency/Originator	Regulation #	HA	HL	RA	RL	Summary/Application
U.S. Department of Energy, (DOE) Washington, D.C.	DOE Order 5400.1, 1988 General Environmental Protection Program	X	X	X	X	Outlines effluent monitoring requirements
	DOE Order 5400.5, 1990 Radiation Protection of the Public and Environment			X	X	Protects public/environment from radiation associated with DOE operations
	DOE Order 5480.4, 1989 Environmental Protection, Safety, and Health Protection Standards	X	X	X	X	Sets requirements for the application of the mandatory environmental protection, safety, and health (ES&H) standards; lists reference ES&H standards
	DOE Order 5484.1, 1981 Environmental Protection, Safety, and Health Protection Information Reporting Requirements	X	X	X	X	Sets requirements for reporting information having environmental protection, safety and health protection significance
	DOE Order 5820.2A, 1988 Radioactive Waste Management	X	X	X	X	Sets radioactive waste management requirements
U.S. Environmental Protection Agency (EPA) Washington, D.C.	40 CFR 52.21 "Prevention of Significant Deterioration (PSD) Requirements"	X				Governs releases of criteria pollutants including NO_x, SO_2 and particulates
	40 CFR 61, 1991 Subpart A General Provisions	X				Regulates hazardous pollutants
	40 CFR 122, 1991 EPA Administered Permit Programs: The National Pollutant Discharge Elimination System		X			Governs release of nonradioactive liquids
	40 CFR 141.16, 1991 Safe Drinking Water Act (National Interim Primary Drinking Water Regulations)		X		X	Sets maximum contaminant levels in public water systems
	40 CFR 261, 1991 Identification and Listing of Hazardous Waste		X			Identifies and lists hazardous wastes
	40 CFR 302.4, 1991 Comprehensive Environmental Response, Compensation and Liability Act of 1980 (CERCLA): Designation, Reportable Quantities and Notification	X	X	X	X	Designates hazardous materials, reportable quantities, notification process
	40 CFR 355, 1991 Superfund Amendments and Reauthorization Act of 1986 (SARA): Emergency Planning and Notification	X	X			Identifies threshold planning quantities for extremely hazardous substances
	40 CFR 403-471, 1991 Effluent Guidelines and Standards		X			Sets pretreatment standards for wastewater discharged to Public-Owned Treatment Works (POTW)

Table 3-1. Applicable Regulations and Standards.

Agency/Originator	Regulation #	HA	HL	RA	RL	Summary/Application
Washington State Department of Ecology, (Ecology) Olympia, Washington	WAC 173-216, 1990 State Waste Discharge Permit Program		X			Governs discharges to ground and surface waters
	WAC 173-220, 1991 National Pollutant Discharge Elimination System Permit		X		X	Governs wastewater discharges to navigable waterways; controls NPDES permit process
	WAC 173-240, 1990 Submission of Plans and Reports for Construction of Wastewater Facilities		X			Controls release of nonradioactive liquids
	WAC 173-303, 1991 Dangerous Waste Regulations		X			Regulates dangerous wastes; prohibits direct release to soil columns
	WAC 173-400, 1991 General Regulations for Air Pollution Sources	X		X		Sets emissions standards for hazardous air pollutants
	WAC 173-400-141, 1991	X				Governs releases of criteria pollutants including NO_x, SO_2, and particulates
	WAC 173-400-105, 1991	X				Governs record keeping and reporting
Benton-Franklin Walla-Walla Counties Air Pollution Control Authority (APCA), Richland, Washington	General Regulation 80-7, 1991	X				Regulates air quality

HA = hazardous airborne.
HL = hazardous liquid.
RA = radioactive airborne.
RL = radioactive liquid.
EDE = effective dose equivalent
EPA = U.S. Environmental Protection Agency
CFR = Code of Federal Regulations
WAC = Washington Administrative Code
*Refers to standards that are referenced in the DOE and EPA regulations.

and programs at the Hanford Site. Environmental monitoring requirements differ between new and existing facilities. For a new facility with the potential for adverse impact on the environment a survey must be conducted before to actual start-up. The survey shall (1) establish background levels of radioactive and toxic pollutants, (2) characterize pertinent environmental and ecological parameters, and (3) identify potential pathways for human exposure or environmental impact as a basis for determining the nature and extent of the subsequent routine operational effluent and environmental monitoring program. Radioactive and nonradioactive pollutant effluents released at the Hanford Site shall be monitored to determine compliance with the DOE 5400 Series of orders. Monitoring is performed to evaluate the effectiveness of effluent treatment and control for material inventory purposes, and to determine compliance with all DOE, EPA, state, and local requirements pertaining to effluents and pollutant impact on the environment.

Guidance on effluent monitoring is also provided by DOE Order 5400.1 (DOE 1988). As a general rule, monitoring should be conducted in a manner that provides accurate measurements of the quantity and/or compliance with applicable discharge and effluent control limits. These include (1) self-imposed administrative limits designed to ensure compliance with in-plant operating limits, effluent standards or guides, and with environmental standards and guides; (2) evaluating the adequacy and effectiveness of containment and waste treatment and control, (3) achieving as low as reasonably achievable (ALARA) levels within technical and economical constraints; and (4) compiling an annual inventory of the material released in effluents and onsite discharges.

Effluent monitoring data collected should include volume, rate of discharge, and content from as close as possible to the point of discharge. Effluent monitoring data pertaining to the release of nonradioactive pollutant material includes the total quantity (amount). An exception would be when a portion of the effluent stream close to the point of generation can be monitored to provide a more accurate estimate of the hazardous material being released from the facility.

Effluents should be monitored at the point at which the applicable standards apply. These monitoring points are explained more fully in WHC-EP-0438 (WHC 1991a). For example, onsite discharges may be monitored at the waste treatment and disposal system; effluents may be monitored at the point after all treatment and control is completed.

The sampling method and frequency should be determined by considering the purpose or need for the data collected. Data are collected to evaluate the effectiveness of waste treatment and control, demonstrate compliance with operating limits of applicable effluent or performance standards, and compile and trend effluent characteristics. Continuous or proportional sampling is recommended and may be required where there is significant variation in the concentrations and mixtures of potential pollutants in the effluent stream. Periodic sampling may be adequate when concentrations and mixtures are reasonably constant and there is minimal likelihood of unusual variations. Similarly, proportional sampling may be necessary when effluent flow rates

9 3 1 2 8 6 4 1 9 4 4

fluctuate, whereas a representative grab-sample may suffice for batch discharges. The method of sampling shall be determined before performing a sampling program according to the Tri-Party Agreement (Ecology et al. 1991).

The EPA regulations pertaining to the release of hazardous substances from DOE facilities are presented in 40 CFR 302, "Designation, Reportable Quantities, and Notification." (EPA 1991b) This regulation, in accordance with Sections 101(14) and 102(a) of the *Comprehensive Environmental Response, Compensation, and Liability Act of 1980* (CERCLA), designates those substances in the statutes of CERCLA, identifies RQ of those substances, and sets forth the notification requirements for releases of those substances. This regulation also lists RQ for hazardous substances designated under Section 311(b)(2)(a) of the *Clean Water Act of 1977*.

3.3 AIR EMISSIONS

The DOE Order 5400.5 (DOE 1990a) provides requirements for the monitoring of radioactive and nonradioactive airborne effluents from DOE facilities at the Hanford Site. This order states that DOE-controlled facilities must comply with 40 CFR 61 (EPA 1991c).

Because radioactive air emissions are not regulated for fossil-fuel power plants, the NESHAPs (40 CFR 61 Subpart H) standard WAC 246-247, (WDOH 1991) and WAC 173-480 (Ecology 1991d) do not apply. However, requirements set forth in the applicable *Clean Air Act of 1977* regulations shall be addressed for compliance.

Additional EPA requirements on hazardous substances are contained in 40 CFR Part 302.4 (EPA 1991b). This regulation provides information on RQ of nonradioactive hazardous substances. Unlisted hazardous substances designated by 40 CFR Part 302.4 are regulated in accordance with the EPA toxicity of the contaminant.

In Washington State, airborne effluents are regulated by the *Washington Clean Air Act of 1967*, (WAC 173-400-075) (Ecology 1991c). General regulations for air pollution sources are presented in WAC 173-400, including emission standards for sources emitting hazardous air pollutants found in WAC 173-400-075.

Regulations, including DOE orders, state that DOE facilities must comply with the requirements set forth in the NESHAPs. Other regulations [e.g., 40 CFR 52, "Approval and Promulgation of Implementation Plans" (EPA 1991d); and DOE Orders 5400.1 (DOE 1988a), 5400.5 (DOE 1990a), and 5484.1 (DOE 1981), and DOE/EH-0173T (DOE 1991)] state that DOE facilities must comply with the requirements set forth in the applicable *Clean Air Act of 1977* regulations. Applicable criteria in these regulations are discussed in Section 3.0 of this document.

3.4 LIQUID EFFLUENTS

Requirements limiting the exposure of the public to radioactive materials from DOE-controlled activities through the drinking water pathway are

9 3 1 2 3 6 4 1 9 4 5

presented in DOE Order 5400.5, Chapter II, Paragraph 1.d (DOE 1990a). The radiological criteria of the public community drinking water standards of 40 CFR Part 141, "National Primary Drinking Water Regulations" (EPA 1991e), are applicable to S&WU 200 East and West Operations as the providers of potable water to the site under the *Safe Drinking Water Act of 1974*. It is the policy of DOE to provide an equivalent level of protection for all persons consuming from a drinking water supply operated by, or for, the DOE. These systems shall not cause any person consuming the water to receive an effective dose equivalent (EDE) greater than 4 mrem/yr, excluding naturally occurring radionuclides. In addition, DOE facility operators shall ensure that the liquid effluents from DOE activities shall not cause private or public drinking water systems downstream of the facility discharge to exceed the drinking water radiological limits of 40 CFR Part 141.

Depending on where a liquid effluent (wastewater) is discharged to, certain regulations apply. These regulations are implemented through issuance of permits by federal, state, and/or local agencies. It is the responsibility of the facility, through U.S. Department of Energy, Richland Field Office (RL), to apply for the permit appropriate to the effluent being discharged. Before applying for any permits, the applicant must know the sources of its wastewater discharges and where the wastewater is being discharged to. The following regulations apply based on where the wastewater is discharged:

1. The 40 CFR 261(4)(b)(6) (EPA 1991a) provides a hazardous waste exclusion for fly ash, bottom ash, and slag waste; and flue gas emissions control waste generated primarily from combustion of gas or other fossil fuel.

2. Washington State controls discharges to ground and surface waters of the state, under WAC 173-216 (Ecology 1991e), and issues permits for such discharges. A permit of this type would be necessary for any discharges to land that could infiltrate to groundwater.

Each type of discharge permit identified will typically contain discharge limitations and monitoring requirements. However, the limitations and monitoring requirements will vary depending on the source and type of wastewater being discharged. For instance, discharges to a publicly owned treatment works will be subject to pretreatment standards based on the production process that generates the wastewater for those processes categorized by the EPA. Categorical processes are identified in 40 CFR 403-47 (EPA 1991f). Specific limitations, monitoring, and reporting requirements have been promulgated for each categorical process. In addition to EPA's requirements, the state and local sewerage agencies may impose additional limitations, monitoring, and reporting requirements. Discharges to a navigable waterway also will be subject to certain standards based on the industrial process that generated the wastewater; certain additional limitations are typically imposed in the National Pollutant Discharge Elimination System permit. In all cases, the specific pollutants to be monitored and the frequency of monitoring and reporting will be based on the applicable regulations and the language of the permit.

9 3 1 2 8 6 4 1 9 4 6

4.0 IDENTIFICATION AND CHARACTERIZATION OF EFFLUENT STREAMS

4.1 IDENTIFICATION AND CHARACTERIZATION OF SOURCE TERMS CONTRIBUTING TO EACH EFFLUENT STREAM

4.1.1 Liquid Effluent

4.1.1.1 Water Softener Regeneration Solution. Sanitary water passes through a water softener to remove calcium and magnesium before it is used in the boiler; this aids in minimizing scaling on the tube bundles. A water softener unit consists of an ion exchange column containing an organic resin and a sodium chloride (salt)-crystal holding tank. The salt tank is used to regenerate the column. Resin in an ion exchange column initially is loaded with sodium ions. When sanitary water passes through the resin, these sodium ions will have an affinity for, and will extract, calcium and magnesium. When the resin becomes saturated, a concentrated sodium chloride solution is passed through the column. Engineering controls (lock and tag of control valves) have been established that will result in a concentration of not more than 9% sodium chloride in this discharge stream. Concentration variability will not be discussed further because the implementation of this administrative control renders this stream "nonregulated."

4.1.1.2 Cooling Water. Cooling water is used to cool pump bearings and the faces of the boilers during boiler operation. The cooling water does not come into contact with any dangerous or regulated materials. Because no products with dangerous or regulated constituents are introduced to this stream the effluent from the stream is considered nonregulated.

4.1.1.3 Floor Drains. Numerous floor drains are located throughout the facility. Sources of liquid waste to these drains include safety showers, sanitary water, and steam condensate. It is not anticipated that any of these three sources will be an entering point for a potentially regulated waste; however, at least one of these floor drains can be the point through which a regulated waste could enter this waste stream. For example, a break in a feed line, or oil leak from a pump. At this point, a listed waste could be introduced to this discharge stream. To minimize this potential, the pump wells (sumps) have been plugged. Also, plugs have been installed in all floor drains within 1.5 m (5 ft) of any pump to provide additional engineering controls.

4.1.1.4 Boiler Blowdown. During the production of steam, minerals not removed in the water softener collect in the boiler. The boiler blowdown is used to bleed off these minerals. Two blowdown operations are performed, continuous and mud drum. The continuous blowdown is ongoing anytime a boiler is in operation. The mud-drum blowdown is for minerals that accumulate in the mud drum and is performed once per shift. Boiler blowdown effluent stream contains antiscaling and oxygen-scavenging compounds that are added to the water. These chemicals are added to maintain efficient boiler operation by minimizing scale formation and corrosion of the boiler tubes. At the current

9 3 1 2 8 6 4 1 9 4 7

time, Dearborn*66 (an oxygen scavenger) is not considered a regulated waste. The concentration at which Deartrol* 4812 (a corrosion and scale prevention) was used, [i.e., 76 L (20 gal) of product to 1,072 L (282 gal) of water], yields a 7% nonregulated solution.

Dearborn 4812, previously used at the 284W and 284E Power Plant was replaced in 1990 with a substitute that contains a smaller amount (<4%) of potassium hydroxide, a hazardous constitutent.

4.1.2 Air Emissions

4.1.2.1 Bag house and Stacks. Flue gas from the boilers is normally routed through the bag houses to remove soot and fly ash. Flue gas from any boiler or any combination of boilers can be directed through ducting and dampers to any or all bag houses and then to either or both stacks. The bags are periodically shaken to remove ash and soot buildup. The ash and soot are then removed from collection hoppers by use of the hydrovac system and sent to the sluice pile.

The air emissions from the stacks and bag house are regulated under the authority of the *Clean Air Act of 1977*. The EPA established the National Ambient Air Quality Standard to protect the public health (primary standards) and the public welfare (secondary standards).

When differences appear in the regulations (e.g., federal, state, or local) concerning air emission standards from fossil fuel boilers, S&WU shall use the more stringent regulation.

4.1.3 Routine Operating Conditions

4.1.3.1 Liquid Effluents. Although potential sources of hazardous materials are possible within the routine operation of the Power Plant, S&WU procedures, engineering controls (e.g., exhaust, ventilation, surveillance, and lock and tag) are used to prevent discharges to the environment. Control of fugitive emissions of vapors or fumes (e.g., spills or use of aerosols) from hazardous materials and substances and fugitive dust are limited at best by the nature of the steam-producing activities in the power plant. Protection of employees is provided by use of respiratory protection, exhaust, and ventilation systems and through the use of high-efficiency particulate air (HEPA) filters when required. Through these controls the hazards to personnel are greatly minimized. In addition, when activities occur that require handling, transporting, packaging, or removing materials (i.e., clean-up of spills) the principles of ALARA are practiced at all times.

Although the solid waste generated from the production of steam by use of fossil fuel meets the exclusion criteria in 40 CFR 261(4)(b)(6) (EPA 1991a) the S&WU, through best management practices, shall maintain engineering and

---

*Dearborn and Deartrol are trademarks of W. R. Grace and Company.

9 3 1 2 8 5 4 1 9 4 8

procedural controls as outlined in WHC-CM-7-5 (WHC 1991b) to prevent the discharge of discarded and/or listed hazardous waste from entering the effluent discharge stream.

4.1.3.2 Air Emission. The opacity monitors are instruments intended to provide continuous opacity measurements of smoke and dust emissions from commercial and small or medium-sized industrial facilities. Typically, the type installed is used for controlling combustion of incinerators and fuel-oil-fired boilers, and for monitoring emission control equipment (e.g., detection of leaks in bag house installations). During routine operating conditions the bag house filters provide for approximately 98.9% containment of particulate to the environment. Although not required by applicable regulations, the opacity meters and recorders are configured in accordance with WAC 173-400-105, "Records, Monitoring and Reporting" (Ecology 1991c). This WAC implements Title 40 CFR 51; Appendix P; Sections 3, 4, and 5 (EPA 1991g), which are the EPA minimum emission monitoring requirements. Visible emissions are required to be below 20% opacity for 3 min in any hour (i.e., the 20% Opacity Rule). Regulation WAC 173-400-040(1) provides for an exception under certain circumstances. The 20% Opacity Rule can only be exceeded for blowing off soot or grate cleaning. During these operational functions the maximum bypass of 15 min per 8-h operating period is allowed. Reporting requirements for emissions are followed according to the requirements in Section 10 of this document.

4.1.4 Upset Operating Conditions

4.1.4.1 Liquid Emissions. Mercury is used in the instrumentation on the boiler control panels in the 284-W Power Plant. Storage of metallic (liquid) mercury is maintained in the 284-W Power Plant. Storage is required should loss of mercury in the instrumentation (e.g., level controllers, manometers) occur. Potential mercury loss in an instrument line is approximately 5.9 kg (13 lb). Further discussion on compliance status can be found in Section 14.0 of this document.

Several breaks in the underground lines leading from the brine pit to the power plant have occurred, resulting in spills regulated by Washington State. Reports to the Westinghouse Hanford Occurrence Notification Center (ONC) reflect less than 54 kg (120 lb) at any given occurrence. Overfilling the brine tanks have also occurred as the result of human error. Further discussion of the brine pits can be found in Section 14.0 of this document.

4.1.4.2 Air Emissions. Upset conditions for the Power Plant facilities that have the potential to generate airborne effluent releases from the power plant bag house can usually be attributed to the loss of instrument air. Flue gas from the boilers is normally routed through the bag houses to remove soot and fly ash from the flue gas. Flue gas from any boiler or any combination of boilers can be directed through ducting and dampers to any or all bag houses and to either or both stacks. The bags are periodically shaken to remove ash and soot build-up. The ash and soot are then removed from collection hoppers by use of the hydrovac system and sent to the sluice pile. Loss of instrument air results in the dampers closing and allowing release to the environment of flue gas and particulates. Manual bypass of the bag house can also be

accomplished to perform maintenance activities. The emissions resulting from either upset or planned release to the environment are covered under the Tri-Party Agreement (Ecology et al. 1991) and the *Clean Air Act of 1977*. Reporting requirements are followed per WHC-CM-7-5 (WHC 1991b).

9 3 1 2 8 6 4 1 9 5 0

5.0 EFFLUENT POINT OF DISCHARGE DESCRIPTION

5.1 LIQUID EFFLUENT

The contributory liquid waste effluent streams from the 284-E and 284-W Power Plants are listed below:

a. Water softener regeneration solution
b. Cooling water
c. Boiler blowdown
d. Floor drains.

The primary liquid effluent pathway under normal and upset conditions is the facility drain system. Effluent from the boiler through blowdown, cooling water, and softener regeneration is discharged to the floor trench or directly into floor drains. The liquid effluents of the 200 East facility discharges to the 216 B-3 pond in the 200 East Area, whereas the 200 West facility discharges to the 284-WB pond (west power plant pond) in the 200 West Area. Floor drains and open floor trenches are located throughout the facility that discharge to the identified ponds or sluice pit. Both effluent streams are transported via vitrified clay piping. Disposal of the liquid effluent is by evaporation and absorption into the soil. Figures 5-1 and 5-2 indicate the sources that produce this effluent stream in 284-E and 284-W Power Plants. In addition, water from steam condensate and miscellaneous drainage in the No. 2 pit, reclaiming pit, and track hopper pit located near the coal shack, is removed via steam jet to an open pit adjacent to the coal unloading area. In both power plants sluicing of the ash from the boilers is performed and discharged to the fly-ash slurry pit, located outside of the facility. Disposal of the liquid effluent is by evaporation and absorption into the soil.

5.2 AIR EMISSIONS

The 284-E and 284-W Power Plants exhaust flue gases and particulates through the stacks to the atmosphere during an upset conditions or planned by-passes of the bag house. Under normal operating conditions the bag house collects the particulate, which is then diverted to sluicing operations. Fly ash is slurred and discharged to the liquid effluent and then to the ash pit. The disposal of the liquid effluent is through evaporation and absorption into the soil.

9 3 1 2 8 6 4 1 9 5 1

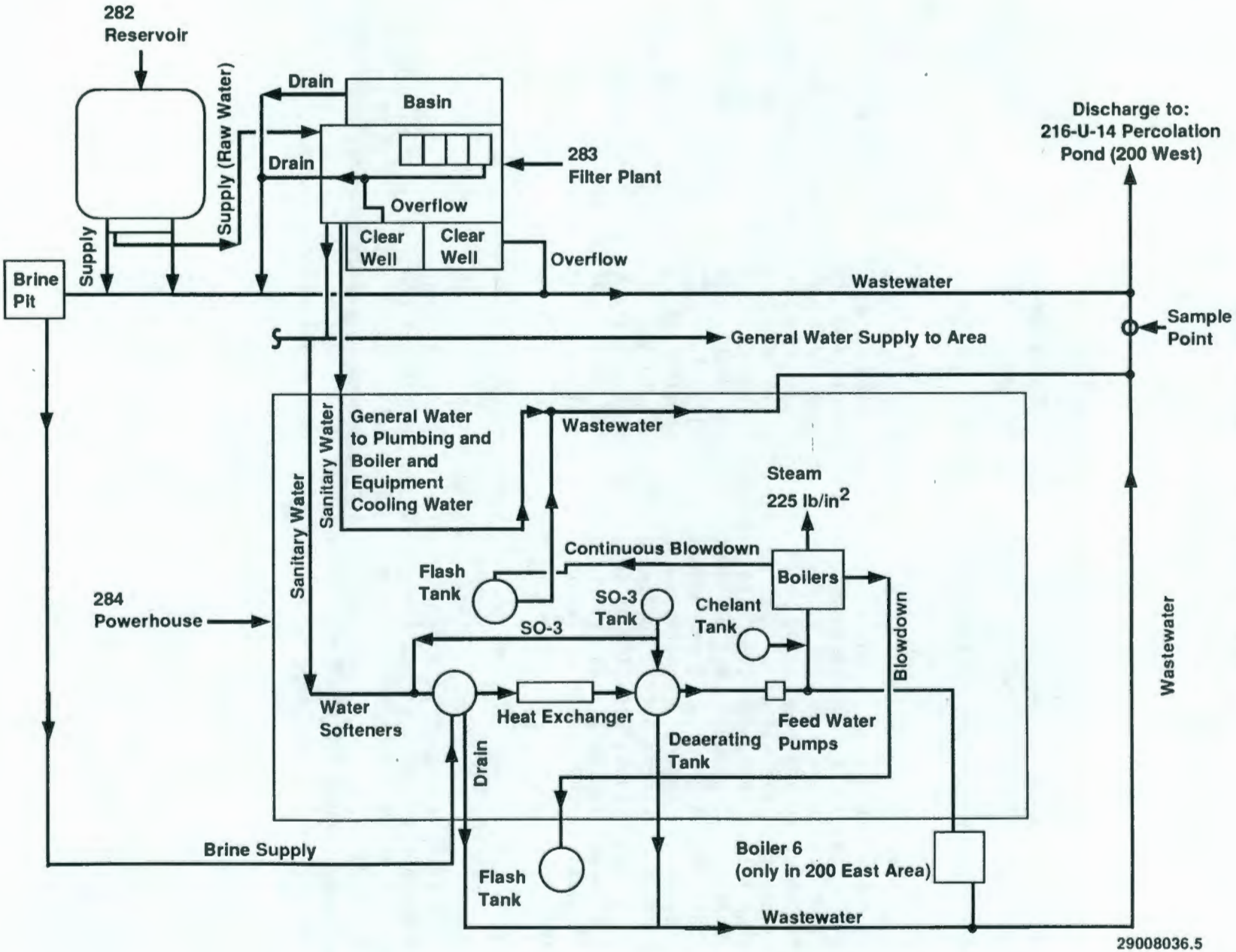

Figure 5-1. 284-W Power Plant Flow Schematic.

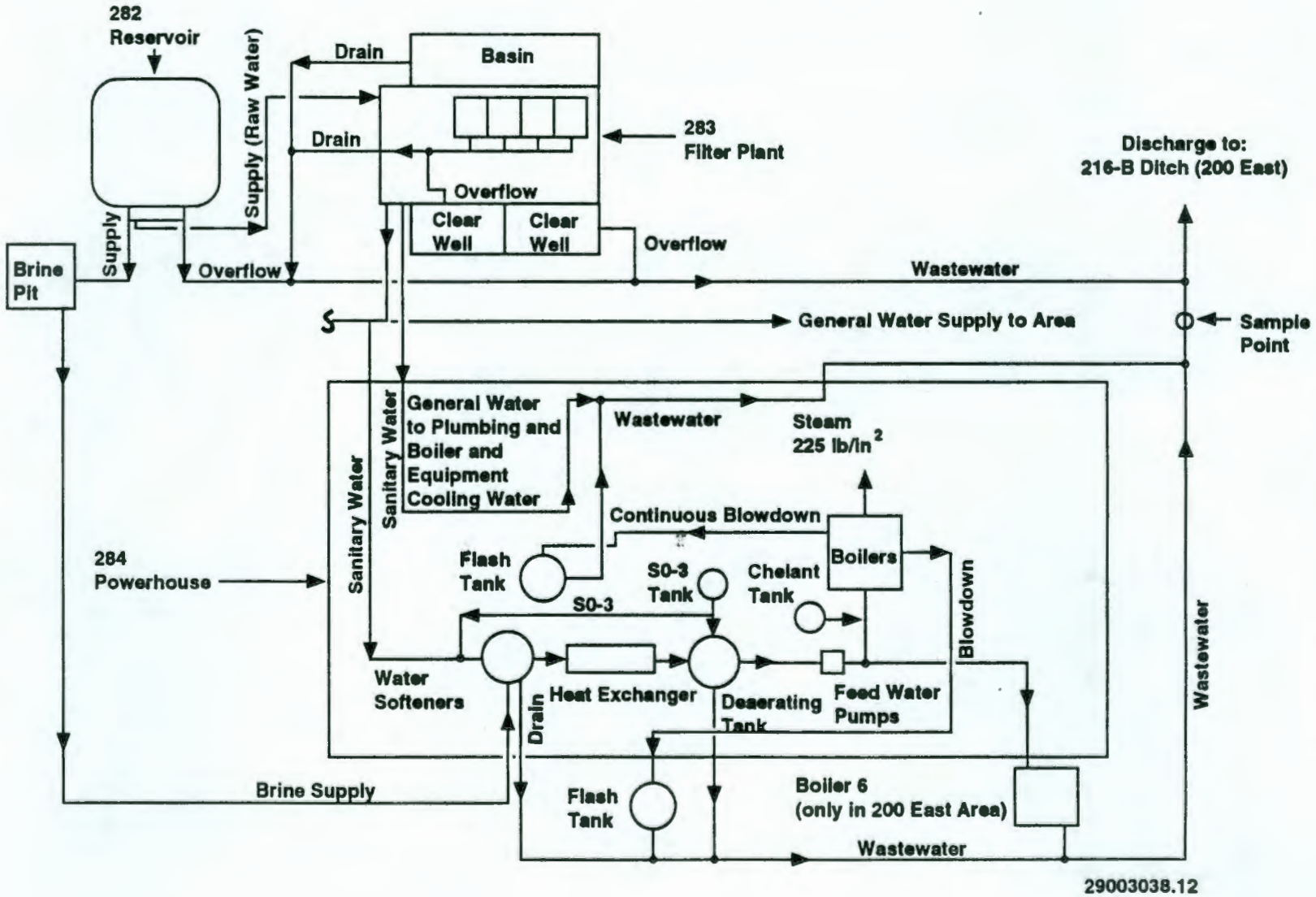

Figure 5-2. 284-E Power Plant Flow Schematic.

This page intentionally left blank.

9 3 1 2 3 6 4 1 9 5 4

6.0 EFFLUENT MONITORING/SAMPLING SYSTEM DESIGN CRITERIA

At present, the ability to monitor air emissions from the power plants is limited to the opacity monitor. The monitor is an instrument intended to provide continuous measurements of smoke and dust emissions from commercial and small or medium-sized industrial facilities. Typically, the monitor is used for combustion control of incinerators and fuel-oil-fired boilers, and for monitoring emission control equipment (e.g., detection of leaks in bag house installations). The system can be used for effluent monitoring or sampling. The monitor performance characteristics and installation data are summarized in Table 6-1.

9 3 1 2 8 6 4 1 9 5 5

Table 6-1. Opacity Monitor Performance Characteristics.

Accuracy	Opacity measurements are provided with a maximum error of ±5% of full scale, or ±2.5% maximum opacity error are zero opacity. This error includes the effects of: • Voltage fluctuations within ±10% of nominal • Ambient temperature variations from -184 °C (-300 °F) to +65 °C (+150 °F) • Alignment variations within ±1.5° of the optical axis • Measurement scale nonlinearity • Zero drift over an operational period of 1 month • Span drift over an operational period of 1 month • Soiling drift over an operational period of 1 month.
Measurement Range	Single range provides 0% to 100% opacity (or transmittance) indication. Optical density measurement units are not available on the monitor. Opacity output is linear with respect to double-pass opacity and non-linear with respect to single-pass opacity. Option 1 includes a second range of 0-50% double pass or 0-30% single pass.
Calibration	Easy, manual, zero and span calibration checks without disassembling or removing the instrument from the stack. Weatherproof enclosure attached to transceiver unit provides self-contained storage space for zero calibration reflector. Option 1 provides a remote zero adjustment.
Spectral Response	Essentially photopic (visible light); maximum response at 580 namometers.
Angle of Projection	±1.8° from the optical axis [approximately 20-cm (8-in.)-dia. circle at 3 m (10 ft)].
Angle of View	±2.4° from the optical axis (approximately 28-cm (11 in.)-dia. circle at 3 m (10 ft)].
Response Time	One second is standard, others available on special request.
Electrical Output	Linear with double-pass opacity (or transmittance); adjustable for 0 to 20 ma or 4 to 20 Maximum compliance is 9 V. Special chart paper is available with a non-linear scale corresponding to equivalent, single-pass, opacity measurement values.
Control and Indicators	Instrument includes stack-mounted junction box with measurement indicator and fuse. Optional control-room panel includes an opacity indicator, fuse, manual reset switch, time-delayed adjustable alarm, remote zero, and dual-range switch.
Alarm-Level Detection	Built-in alarm-level detector with adjustable level. Normally open contacts rated at 110 V and 1A maximum.
Light Source	Tungsten, incandescent; 20,000 h expected life.

NOTE: The operational period is the normal period of maintenance-free operation that can be expected in typical applications.

9 3 1 2 8 6 4 1 9 5 6

7.0 CHARACTERIZATION OF CURRENT ENVIRONMENTAL MONITORING SYSTEM

7.1 AIR EMISSIONS

Opacity meters are calibrated on a regular basis to ensure operation in accordance with the following sections of WHC-CM-8-2 (WHC 1991d), Level III, 200 Area Support Services Manual.

- Section 201--This procedure provides an index of the 200 Areas' calibration procedures, and the index is updated quarterly and shall be maintained and controlled in accordance with WHC-CM-8-2, Section 102.1, "Document Control."

- Section 202--Establishes the administrative requirements for the Plant Instrumentation Surveillance, Calibration, and Evaluation System.

The program utilizes a computerized database to document and forecast plant-installed instrument and equipment calibrations and verifications. The S&WU has adopted a policy of a annual bag house efficiency test. See Sections 8.0 and 14.0 of this document for further discussion. This test is performed by Hanford Environmental Health Foundation (HEHF) to generate statistics that will show how much particulate the power plants have discharged over the years.

7.2 INSTRUMENTATION DESCRIPTION

7.2.1 Air Emissions

7.2.1.1 Controls and instrumentation. Bag houses have a control panel that contains all the controls, indicators, instruments, and recorders necessary for proper operation of the bag house. This panel is located on the second floor (firing isle) of the power plant. Various annunciators are installed to sound an alarm (flashing lights and a buzzer), for malfunctions or dangerous levels for the following functions:

- Hopper high ash level
- High inlet gas temperature
- Low inlet gas temperature
- High outlet gas temperature
- Low outlet gas temperature
- High pressure differential
- Low pressure differential
- High Opacity
- High compartment ash level
- High inlet plenum draft
- Low inlet plenum draft
- Reverse air damper/flue gas damper--open
- Bypass damper--open with increased demand
- Trouble with the 13.8 KVA, 480 V transformer.

The alarm system is designed to provide early warning of possible bag house problems that could result in a bypass of the bag house and discharge to the atmosphere.

7.2.2 Liquid Effluents

At the present, there are no monitoring capabilities or equipment installed within the plant itself that provide information necessary to determine the effluent discharge at the 284-E Power Plant. At the time the power plant facilities were built, flow monitors for effluent discharges were not required as part of the design. Regulations pertaining to environmental issues that would require this information were not established during the 1940's when the plants were constructed. Currently, an evaluation on BAT is being prepared in response to the Tri-Party Agreement (Ecology et al. 1991) and to address monitoring requirements established by the EPA. In addition, sampling and analysis plans (SAPs) have been prepared in accordance with Ecology Consent Order No. DE-91NM-177 (Ecology and DOE 1992). These SAPs are WHC-SD-WM-PLN-033 Rev. 1, *Sampling and Analysis Plan of the 284W Area Powerplant and 277W Fabrication Shop Process Wastewater Streams* (WHC 1992a), and WHC-SD-WM-PLN-034 Rev. 1, *Sampling and Analysis Plan of 284E Area Powerplant Process Wastewater Stream* (WHC 1992b).

A flow monitor outside of the 284-W Power Plant indicates the combination flow of the liquid effluent from the power plant 277W, 283W, and 282W facilities. Additional discussion of sampling, which has been performed for characterization of the liquid effluent stream, can be found in Section 8.0 of this document.

7.3 TECHNICAL SPECIFICATIONS PERTAINING TO ENVIRONMENTAL MONITORING SYSTEM

The 284-E and 284-W Power Plant boilers are vintage (1945 and 1954) such that state-of-the-art instrumentation is not available. The boilers are operated and comply with the requirements as set forth within the industry by the *American Society of Mechanical Engineers Boiler and Pressure Vessel Code* (ASME 1989) and manufacture's recommendation. This ensures safe and efficient boiler operations.

Calibration of the instrumentation and apparatus associated with the boiler controls are in compliance with the American National Standards Institute *Performance Test Codes*, ANSI/ASME PTC 19.10-1981, Part 10, "Flue and Exhaust Gas Analysis, Instruments and Apparatus" (ASNI/ASME 1981).

8.0 HISTORICAL MONITORING/SAMPLING DATA FOR EFFLUENT STREAMS

Analysis was performed in 1985 by HEHF to determine whether or not the ash from the power plant exhibited the DW characteristics of Environmental Protection (EP) toxicity. In accordance with WAC 173-303 (Ecology 1991b), samples were extracted for 24 h with dilute acetic acid at a pH greater than 5.0 or less than 0.2. The resulting aqueous extracts were analyzed for the eight heavy metals listed in Table 8-1, using atomic absorption flame emission spectroscopy. All sample extract metal concentrations found were well below the minimum extract concentrations required for designation as EP toxic material. The results (Table 8-1) indicated that these samples would not be classified as DW based on the characteristic of EP toxicity.

In 1986, Pacific Northwest Laboratory (PNL) was contracted to conduct an ash analysis. Analyses were taken from the bag house No. 1, bag house No. 2, No. 2 boiler walls of the firebox, and the 200 East Area ash pit for the 284-E Power Plant. An analysis from bag house No. 1 in the 284-W Power Plant was also taken. Table 8-2, shows the results of the sampling program.

In July and August of 1989, source testing was conducted by HEHF to measure emissions from steam boilers in the 284-E and 284-W Power Plants. Emission testing included sampling for particulate, sulfur dioxide (SO_2), and collecting a series of instantaneous grab samples for oxides of nitrogen (NO_x). The source testing determined if power plant emission control devices were effective in controlling emissions under average boiler operating conditions. Table 8-3 shows the emission results for 284-W Power Plants and Table 8-4 shows the emission results for 284-E Power Plants.

Estimates of the Impacts of 200E/200W Power Plants on Particulate Ambient Air Quality (PNL 1989) was prepared for DOE under Contract DE-AC06-76RLO 1830 by PNL, to determine emission of particulate from the stacks. The conclusion of the report was that the 200E and 200W Power Plants were well below the allowable particulate emissions standards.

Table 8-1. Liquid Effluent and Emissions from the Power Plant Stack.

Contaminant	Concentration of extract (mg/L)						DW Minimum extract concentration (mg/L)
	E23-51	E23-52	E23-53	W14-64	W14-65	W14-66	
Arsenic	<0.2	<0.2	<0.2	<0.2	<0.2	<0.2	5
Barium	3.2	2.8	2.9	2.4	4.3	1.8	100
Cadmium	<0.05	<0.05	<0.05	<0.05	<0.05	<0.05	1
Chromium	<0.05	<0.05	<0.05	<0.05	<0.05	<0.05	5
Lead	<0.1	<0.1	<0.1	<0.1	<0.1	<0.1	5
Mercury	<0.001	<0.001	<0.001	<0.001	<0.001	<0.001	0.2
Selenium	<0.1	<0.1	<0.1	<0.1	<0.1	<0.1	1
Silver	0.01	<0.01	0.01	0.01	0.02	0.01	5

Table 8-2. Ash Analyses.

Sample parameter*	Soluble components				
	284-W Bag house 1 Mod 2	284-E No. 2 Boiler Walls of Firebox	284-E Bag house 1 Mod 5	284-E Bag house 2 Mod 5	Ash Pit 200E
Chloride	124	576	25	78	13
Nitrite	18	57	7	167	--
Phosphate	29	--	31	115	~25
Nitrate	4	--	--	--	--
Sulfate	1,270	260	47	3,330	230
Oxalate	37	--	--	--	--
Carbon	0.1%	0.14%	0.009%	est 80-90%	--
Aluminum	7,080	3,000	5,700	4,650	1,400
Calcium	8,480	9,400	12,000	4,750	2,500
Iron	730	5,000	370	850	930
Silicon	4,600	2,000	3,200	2,400	560
Phosphorus	1,500	1,100	3,200	480	880
Misc	1,000	2,000	1,500	1,500	900

*Except as noted, all values are ppm in solid. (0.1 wt.% = 1,000 ppm)

9 3 1 2 8 5 4 1 9 6 0

Table 8-3. Source Testing Emission Results, 284-W Power Plant, 200 West Area (August 10, 1989).

Parameter	Run 1	Run 2	Run 3
Time of sample	12:14-13:41	14:37-15:54	16:32-17:45
Average stack gas temperature °C (°F)	68.3 (155)	66.6 (152)	73.3 (164)
Percent O_2 in stack gas	18.5	18.5	18.0
Percent CO_2 in stack gas	1.4	1.8	2.0
Percent H_2O in stack gas	1.7	1.0	1.5
Average stack gas velocity m (ft)/s	5.5 (18.2)	5.4 (17.7)	5.2 (17.2)
Average volumetric flow rate (dstdft^3/h)	3.3 E+06	3.25 E+06	3.09 E+06
Volume stack gas sampled (dstdft^3)	45.39	43.21	41.85
Particulate grain loading (grains/dstdft^3 at 7% O_2)	<0.001	0.005	<0.001
Percent isokinetic	109.4	106.0	107.9
Average sulfur dioxide (ppm at 7% O_2)	748	812	714
Average NO_x (ppm)	435	453	464

Table 8-4. Source Testing Emission Results, 284-E Power Plant, 200 East Area (July 27, 1990).

Parameter	Run 1	Run 2	Run 3
Time of sample	10:18-11:22	12:09-13:12	14:11-15:16
Average stack gas temperature °C (°F)	85.0 (185)	85.0 (185)	93.3 (200)
Percent O_2 in stack gas	18.6	18.8	15.8
Percent CO_2 in stack gas	2.4	2.8	3.2
Percent H_2O in stack gas	1.8	1.2	1.4
Average stack gas velocity m (ft)/s	5.2 (17.2)	6.4 (20.9)	4.6 (15.1)
Average volumetric flow rate ($dstdft^3/h$)	4.48 E+06	5.49 E+06	3.86 E+06
Volume stack gas sampled ($dstdft^3$)	38.43	46.36	33.91
Particulate grain loading grains/$dstdft^3$ at 7% O_2	0.017	0.008	0.010
Percent isokinetic	102.9	101.5	105.8
Average sulfur dioxide (ppm at 7% O_2)	928	908	346
Average NO_x (ppm)	407	449	428

9 3 1 2 8 6 4 1 9 6 2

9.0 SAMPLE ANALYSIS

On May 23, 1991, samples were taken from the ash disposal pits to ensure that the fly ash slurry discharge stream was within regulatory limits. Twelve samples were extracted, containing liquid and solid soil examples. The samples were taken through the Office of Sample Management (OSM) according to the RCRA protocols established by SW-846, *Test Methods for Evaluating Solid Waste: Physical/Chemical Methods* (EPA 1986). The samples were analyzed for volatiles, semivolatiles, total characterization leaching procedure metals, alkalinity, anions, and pH. As of this revision, sample results are available if requested. Based on results of coal ash sampling, the coal ash has been determined to be nonhomogeneous and not regulated under WAC 173-303 (Ecology 1991b) (see Attachment B).

9.1 U.S. DEPARTMENT OF ENERGY ANALYTICAL AND LABORATORY GUIDELINES

The S&WU shall use the analytical laboratories that are approved by Westinghouse Hanford through the OSM meeting the compliance of SW-846 of the EPA.

The analytical and laboratory procedures for the FEMP activities are identified in the *Quality Assurance Project Plan for the Facility Effluent Monitoring Plan Activities* (WHC 1991e). General requirements for laboratory procedures, data analyses, and statistical treatment are addressed in the quality assurance project plan (QAPjP) (Tables 9-1 and 9-2).

The following elements are identified in the *Environmental Regulatory Guide for Radiological Effluent Monitoring and Environmental Surveillance* (DOE 1991).

9.2 SAMPLE AND DATA CHAIN OF CUSTODY

The primary objective of the chain of custody is to create an accurate written record that is used to trace possession and handling of the sample from the moment of its collection through analysis. Proper documentation and control ensures that all documents for a specific project are accounted for when the project is completed. The chain of custody is one of many documents required by SW-846 (EPA 1986).

The OSM provides the administrative control of samples from the time taken to disposition. The OSM provides this oversight for Westinghouse Hanford through the implementation of *Office of Sample Management Administrative Manual*, WHC-CM-5-3 (WHC 1991f), which covers the procedures used to perform this function. Samples that are collected and tracked through a work order system with the OSM shall comply with SW-846. The S&WU shall maintain copies of all data taken during a sampling program provided by a contractor or OSM to ensure that regulatory compliance is maintained.

Table 9-1. Laboratory Procedures.

Element	Documentation
Sample identification system	To be provided when complete
Procedures preventing crosscontamination	Contained in 222-S Laboratory Analytical Procedures (identified in QAPjP WHC-EP-0446 Table 8-1)
Documentation of methods	Contained in 222-S Laboratory Analytical Procedures (identified in QAPjP WHC-EP-0446 Table 8-1)
Gamma emitting radionuclides	Contained in 222-S Laboratory Analytical Procedures (identified in QAPjP WHC-EP-0446 Table 8-1)
Calibration	Contained in 222-S Laboratory Analytical Procedures (identified in QAPjP WHC-EP-0446 Table 8-1)
Handling of samples	Contained in 222-S Laboratory Analytical Procedures (identified in QAPjP WHC-EP-0446 Table 8-1)
Analysis method and capabilities	Contained in 222-S Laboratory Analytical Procedures (identified in QAPjP WHC-EP-0446 Table 8-1)
Gross alpha, beta, and gamma measurements	Contained in 222-S Laboratory Analytical Procedures (identified in QAPjP WHC-EP-0446 Table 8-1)
Direct gamma-ray spectrometry	Contained in 222-S Laboratory Analytical Procedures (identified in QAPjP WHC-EP-0446 Table 8-1)
Beta counters	Contained in 222-S Laboratory Analytical Procedures (identified in QAPjP WHC-EP-0446 Table 8-1)
Alpha-energy analysis	Contained in 222-S Laboratory Analytical Procedures (identified in QAPjP WHC-EP-0446 Table 8-1)
Radiochemical separation procedures	Contained in 222-S Laboratory Analytical Procedures (identified in QAPjP WHC-EP-0446 Table 8-1)
Reporting of results	Contained in 222-S Laboratory Analytical Procedures (identified in QAPjP WHC-EP-0446 Table 8-1)
Counter calibration	Contained in 222-S Laboratory Analytical Procedures (identified in QAPjP WHC-EP-0446 Table B-1)
Intercalibration of equipment and procedures	Contained in 222-S Laboratory Analytical Procedures (identified in QAPjP WHC-EP-0446 Table 8-1 and Table B-1)
Counter background	Contained in 222-S Laboratory Analytical Procedures (identified in QAPjP, WHC-EP-0446 Table 8-1)
Quality assurance	Contained in 222-S Laboratory Analytical Procedures (identified in QAPjP, WHC-EP-0446 Table 8-1)

9 3 1 2 3 6 4 1 9 6 4

Table 9-2. Data Analyses and Statistical Treatment.

Element	Documentation
Summary of data and statistical treatment requirements	Contained in 222-S Laboratory Analytical Procedures (identified in QAPjP, WHC-EP-0446 Table 8-1)
Variability of effluent and environmental data	Contained in 222-S Laboratory Analytical Procedures (identified in QAPjP, WHC-EP-0446 Table 8-1)
Summarization of data and testing for outliers	Contained in 222-S Laboratory FEMP
Treatment of significant figures	Contained in 222-S Laboratory FEMP
Parent-decay product relationships	Contained in 222-S Laboratory FEMP
Comparisons to regulatory or administrative control standards and control data	Contained in 222-S Laboratory Analytical Procedures (identified in QAPjP, WHC-EP-0446 Table 8-1)
Quality assurance	Contained in 222-S Laboratory Analytical Procedures (identified in QAPjP, WHC-EP-0446 Table 8-1)

Samples performed by S&WU personnel shall utilize "Chain-of-Custody" Procedure SWU2-A-020 (WHC 1991h). Sampling will be performed according to the SAP (see Section 7.2.2). The SAPs have been prepared pursuant to the Tri-Party Agreement (Ecology et al. 1991) and are available for review.

9 3 1 2 8 6 4 1 9 6 5

This page intentionally left blank.

9 3 1 2 3 5 4 1 9 6 6

10.0 NOTIFICATIONS AND REPORTING REQUIREMENTS

The DOE Orders 5400.1, Chapter II (DOE 1988a), 5000.3A (DOE 1990b), and others require notification and reporting of specific events related to effluents. These requirements notify DOE and other impacted groups of environmental occurrences and provide for routine reporting of environmental protection information. The policies and procedures that provide notification and reporting requirements are provided in WHC-CM-1-3, *Management Requirements and Procedures*, MRP 5.14 (WHC 1990a).

The basic requirements for event notification and reporting to non-DOE federal agencies pertaining to radioactive and hazardous substances are provided in 40 CFR 61.10 and 40 CFR 302, respectively (EPA 1991c, 1991b). The notification and reporting requirements for DWs are provided in WAC, Chapter 173-303 (Ecology 1991b). Also, federal, state, and/or local facility discharge permits may contain additional notification and reporting requirements.

The RL currently requires contractors to make reports and notifications on environmental occurrences and routine monitoring results.

10.1 ENVIRONMENTAL OCCURRENCE

For an environmental occurrence, the affected facility management will notify the area specific manager of the environmental protection function within the responsible contractor. Notification will be made via the established communication links that are specified in WHC-CM-1-1 (WHC 1991i). Line management, in conjunction with environmental protection personnel, will provide prompt categorization of the event and notification to the Hanford Site ONC. The ONC will in turn notify the appropriate RL management. The contractor environmental protection management will also notify the Environmental Oversight Branch of the RL when categorization of an event is complete. Notification and response procedures related to effluent monitoring and sampling should be referenced in this section.

10.2 PERIODIC ROUTINE EFFLUENT MONITORING REPORTS

On a periodic basis, effluent monitoring data are gathered by the Hanford Site contractors on all RL facilities for compilation. The environmental protection group within Westinghouse Hanford reports to the APCA annually on the hazardous pollutants and onsite discharges from the 200 East and 200 West Area power plants.

This page intentionally left blank.

9 3 1 2 8 5 4 1 9 6 8

11.0 INTERFACE WITH THE OPERATIONAL ENVIRONMENTAL SURVEILLANCE PROGRAM

11.1 DESCRIPTION

The sitewide EMP, as described in WHC-EP-0491 (WHC 1991j), consists of two distinct but related components: environmental surveillance conducted by PNL and effluent monitoring conducted by Westinghouse Hanford. The responsibilities for these two portions of the EMP are delineated in a memorandum of understanding (PNL/WHC 1989). Environmental surveillance, conducted by PNL, consists of surveillance of all environmental parameters to demonstrate compliance with regulations. Near-facility monitoring is required by Part O, "Environmental Monitoring," *Environmental Compliance* (WHC 1991b), and procedures are described in *Operational Environmental Monitoring* (WHC 1988a). Although the powerplants do not discharge radioactive air emissions, sampling stations are still provided near the facility to monitor cross contamination. No near-facility sampling is conducted for criteria air pollutants. Sampling of wastewater is conducted according to Section 9.0 of this FEMP.

11.2 PURPOSE

Near-facility operational environmental monitoring is to determine the effectiveness of environmental controls in preventing unplanned spread of contamination from facilities and sites operated by Westinghouse Hanford for DOE. Effluent monitoring and reporting, monitoring of surplus and waste management units, and monitoring near-facility environmental media are, therefore, conducted by Westinghouse Hanford for the purposes of: controlling operations, determining the effectiveness of facility effluent controls, measuring the adequacy of containment at waste transportation and disposal units, detecting and monitoring upset conditions, and evaluating and upgrading effluent monitoring capabilities.

11.3 BASIS

Near-facility environmental surveillance is conducted to (1) monitor employee protection; (2) monitor environmental protection; and (3) ensure compliance with local, state, and federal regulations. Compliance with parts of DOE Orders 5400.1, *General Environmental Protection Program* (DOE 1988a); 5400.5, *Radiation Protection of the Public and the Environment* (DOE 1990a); 5484.1, *Protection, Safety, and Health Protection Information Reporting System* (DOE 1981); 5820.2A, *Radioactive Waste Management* (DOE 1988b); and DOE/EH-0173T, *Environmental Regulatory Guide for Radiological Effluent Monitoring and Environmental Surveillance* (DOE 1991), is addressed through this activity. Since there are no radioactive effluent discharges from the power plants, the near-facility environmental surveillance is conducted to monitor contamination that may have migrated from a nearby radiological facility in the 200 Area.

11.4 MEDIA SAMPLED AND ANALYSES PERFORMED

Procedure protocols for sampling, analysis, data handling, and reporting are specified in WHC-CM-7-4 (WHC 1988a). Media include ambient air, surface water, groundwater, external radiation dose, soil, sediment, vegetation, and animals at or near active and inactive facilities and/or waste sites. Parameters monitored include the following, as needed: pH, water temperature, radionuclides, radiation exposure, and hazardous constituents. Animals that are not contaminated, as determined by a field instrument survey, are released at the capture location.

11.5 LOCATIONS

The power plants do not contain radioactive effluents that may be discharged to a crib, pond, etc. Therefore, monitoring stations are set up only to check cross contamination from another 200 Area radiological facility.

11.6 PROGRAM REVIEW

The operational environmental monitoring program will be reviewed at least annually to determine that the appropriate effluents are being monitored and that the monitor locations are in position to best determine potential releases.

11.7 SAMPLER DESIGN

Sampler design (e.g., air monitors) will be reviewed at least biannually to determine equipment efficiency and compliance with current EPA and industry (e.g., American National Standards Institute and American Society for Testing and Materials) standards.

11.8 COMMUNICATION

The operations and engineering contractor and the research and development contractor will compare and communicate results of their respective monitoring programs at least quarterly and as soon as possible under upset conditions.

11.9 REPORTS

Because the power plants generate no radioactive air and liquid emissions, no radionuclide values are reported in the annual report described above. However, PNL and HEHF have measured ambient air and offsite concentrations for oxides of nitrogen and sulfur dioxide over the years; these results are included in the annual report to the APCA.

9 3 1 2 8 6 4 1 9 7 0

12.0 QUALITY ASSURANCE

QA data are used to verify that the analyses were carried out correctly and to defend the analytical results. Each QA test, as required by WHC-EP-0446-1, *Quality Assurance Project Plan* (WHC 1991e), provides specific information for the contractual quantitation limit and quality of the data. The actual test run depends on the project requirements and the way in which the analytical data are to be used. These components of the QA program will help produce data of known quality throughout the sampling and analysis process.

12.1 INTERNAL QUALITY CONTROL

Internal quality control (QC) consists of collecting and/or analyzing a series of duplicate, blank, and spike samples to ensure that the analytical results are within the quality control limits specified for the QA/QC program. Laboratory QC samples are documented at the bench and reported with analytical results. The QC sample results are interpreted to quantify bias, precision, and accuracy and calculate limits of detection and quantitation for analytical results. Field QA samples will be documented in field logbooks and submitted as blind samples to the laboratory when appropriate.

Analytical samples shall be subject to in-process QC measures in both the field and laboratory. Unless superseded by specific directions provided in S&WU procedures, the minimum field QC requirements shall apply as adapted from SW-846 (EPA 1986) as modified by the proposed rule changes included in the Federal Register, Volume 54, No. 13 (EPA 1989).

The internal quality controls are defined in the onsite 222-S Laboratory operating procedures and QA program and project plans.

The 222-S Laboratory on the Hanford Site has one program plan and two project plans to address applicable quality requirements related to sample analysis. These plans are as follows:

- WHC-SD-CP-QAPP-003, *Quality Assurance Program Plan for the Chemical Analysis of Environmental Samples* (WHC 1990b)
- WHC-SD-CP-QAPP-001, *Analytical Chemistry Services Laboratories Quality Assurance Plan* (WHC 1989a)
- WHC-SD-CP-QAPP-002, *Quality Assurance Project Plan for the Chemical Analysis of Highly Radioactive Mixed Waste Samples in Support of Environmental Activities on the Hanford Site* (WHC 1989b).

The RCRA protocol liquid effluent sampling, associated with the LES, is not part of the FEMPs. The QA requirements for the sampling analysis plans associated with the LES are identified in the latest version of the WHC-SD-WM-QAPP-011, *Liquid Effluent Sampling Quality Assurance Project Plan* (WHC 1991k).

This page intentionally left blank.

9 3 1 2 3 5 4 1 9 7 2

13.0 INTERNAL AND EXTERNAL PLAN REVIEW

The DOE Order 5400.1, *General Environmental Protection Program*, Chapter IV (DOE 1988a), requires the FEMP to be reviewed annually and updated every 3 yr. The FEMP should be reviewed and updated as necessary after each major change or modification in the facility processes; structure, ventilation, and liquid collection systems; monitoring equipment; waste treatment; or significant change to the SARs. Operations management shall maintain records of reports on measurements of stack particulate or other nonradioactive hazardous pollutant emissions for 5 yr.

Facility management is to obtain the Environmental Protection functions's approval for all changes to the FEMPS, including those generated in the annual review and update.

Westinghouse Hanford Environmental Protection prepares an annual effluent discharges report for each area on the Hanford Site to cover both airborne and liquid release pathways. In addition, a report on the air emissions and compliance to NESHAPs is prepared by Environmental Protection and submitted to EPA and DOE. The power plant liquid and air emissions are included in the annual report. In addition, a separate annual report is prepared by EP to the APCA on the power plant's emissions of regulated air pollutants. This is required by WAC 173-400-105 (Ecology 1991c) and General Regulation 80-7 (APCA 1980).

9312836419973

This page intentionally left blank.

9 3 1 2 3 5 4 1 9 7 4

14.0 COMPLIANCE ASSESSMENT

14.1 LIQUID EMISSIONS

14.1.1 Mercury Instruments

Evaluation of the control panels indicated that replacement should be a high priority. Documentation of mercury spills reported to ONC have not exceeded RQ of 0.45 kg (1 lb). In June 1990, a mercury spill occurred on the steam riser impulse line on the No. 3 boiler control panel. An Event Fact Sheet SWU-90-014 (WHC 1990c) was initiated per the spill reporting requirements in WHC-CM-7-4 (WHC 1988a). The amount of the spill was determined to be minimal. The HEHF estimated the spill totalled 10-20 cm^4 within a 2.8 m^2 (30 ft^2) floor surface and 37 cm^2 (4 ft^2) of boiler surfaces. As a result of this spill, a chemical-specific emergency response procedure (Mercury) SWU2-A-013 (WHC 1990d) was implemented in 1990 to ensure safety to personnel and the environment.

Employee air monitoring was performed by HEHF in June 1990 to assess worker exposure to mercury vapor during cleanup of the elemental mercury and to provide baseline information for future mercury spill cleanup activities. A mercury vapor analyzer, factory calibrated on May 9, 1990, was used to monitor workers' breathing zone mercury vapor concentrations throughout the cleanup process. The mercury vapor levels encountered in the workers' breathing zone during this cleanup activity were well below the applicable exposure limit of 0.05 mg/m^3 (HEHF 1990). In March, 1991 another mercury spill occurred in the boiler control panel from the No. 1 Boiler steam flow detector. Occurrence Report WHC-91-0195-RO (WHC 1991l) was initiated per WHC-CM-7-5 (WHC 1991b). It was determined that 4 kg (0.9 lbs) of mercury was spilled from the detector. The HEHF performed a surveillance of the cleanup area before the work area was approved for continued use. All ambient air mercury concentrations were less than the PEL/TLV (permissible exposure limit/ threshold limit value) of 0.05 mg/m^3. Airborne mercury vapor concentrations were measured on March 8, 1991, with the Bacharach (Model MV-2) J-W Mercury Vapor Sniffer* (factory calibrated on June 22, 1990). Monitoring was performed within a restricted area established following the spill (HEHF 1991).

In 1990 the environment (ground) around the brine pit and leading into the power plants were entered into the Waste Information Data System program for future remedial actions per WHC-CM-7-5 (WHC 1991b).

On December 29, 1990, WAC 173-360 (Ecology 1991f) underground storage tank (UST) regulations became effective. Before the state regulations became effective, UST systems were regulated under 40 CFR 280 and 281 (EPA 1991h,i). Because the brine tanks contain a Washington State-only regulated substance, they were exempt from federal regulations. Because they were field constructed UST the brine tanks fall into the deferred category under the state UST regulations.

---

*Bacharach J-W Mercury Vapor Sniffer is a trademark of Bacharach, Inc.

The major impact of the state regulations effective July 1, 1991, is that the UST systems will require a valid permit from Ecology. The Hanford Surplus Facilities Program has provided the proper notifications to obtain tank permits from RL for submission to Ecology as required by WAC 173-360-130, "Tank Permits and Delivery of Regulated Substances" (Ecology 1991f). The necessary permits have been issued by Ecology.

In addition to the permit requirement, the UST systems are subject to the following sections of WAC 173-360, "Investigation and Access" (360-140), "Enforcement" (360-160), "Penalties" (360-170), "Annual Tank Fees" (360-190), "Notification Requirements" (360-200), "Reporting of Confirmed Releases" (360-372), and "Permanent Closure and Change in Service" (360-385).

The S&WU facilities, through operation and maintenance of the power plant use, generate and dispose of or manage regulated substances. Sampling shall be provided when a chemical has a potential to exceed 10% of its equivalent concentration percent for the stream mixture as in WAC 173-303-300 (Ecology 1991b). The DW generated at the S&WU power plant is managed in compliance with applicable EPA and Washington State Dangerous Waste regulations according to WAC 173-303-070. (Refer to Section 3.0 of this document.)

14.2 AIR EMISSIONS

Particulate and flue gases from the bag house or stacks meet the regulatory requirements as established by the *Clean-Air Act of 1977* and the APCA. For 1989 through 1991, no established limits in the Benton-Franklin-Walla Walla Counties regulations were exceeded.

There are no apparent state or federal statutes for fossil-fuel-fired boilers that require the monitoring of stack particulate emissions during an upset condition. However, state regulations do require that the operator report if the opacity standards of General Regulation 80-7 are exceeded. As a Best Management Practice S&WU has adopted a policy of a annual bag house efficiency test. Test methods, analytical procedures, and calculations used for this test were in general accordance with EPA source test methods as specified in 40 CFR 60, *Environmental Protection Agency Regulations on Standards of Performance for New Stationary Sources*, (EPA 1991j) and "General Regulation 80-7" of the Benton-Franklin-Walla Walla Counties Air Pollution Control Authority, Section 400-050 (APCA 1980). This test is performed by HEHF to generate statistics that will show how much particulate the power plants have discharged over the years. Past test results are shown in Section 8.0, Tables 8-3 and 8-4 of this document.

15.0 SUMMARY AND CONCLUSIONS

Monitoring requirements for nonradioactive liquid discharges are based on the need to verify knowledge of a DW (or lack thereof) before storing, treating, or disposing of regulated substances. Monitoring shall be provided when there is significant potential to exceed nonregulated limits. The power plants currently do not require specific monitoring for nonradioactive and radioactive liquid discharges because of the lack of potential source terms. However, monitoring of the liquid discharges at the point of release is being required by the BAT document in response to the Tri-Party Agreement (Ecology et al. 1991).

Project W-049H will provide a collection, conveyance, and disposal system for the 200 Areas. The need for treating the effluent streams from the 200 West Power Plant facilities will be determined from an evaluation of BAT in response to the Tri-Party Agreement at the source generation facility for each stream. The BAT for the 200 West Power Plant has been completed. It is WHC-SD-W049H-ER-003, Vol. 2 Rev. 0, *200 Area Treated Effluent Disposal Facility Wastewater (Project W-0491) Efficiency Report, Appendixes J to U* (WHC 1992c). The BAT for the 200 East Power Plant facilities was completed in September 1992 and is awaiting approval from Ecology.

The results of the BAT evaluations will be included in the engineering report for the collection and conveyance system to be submitted to Ecology for approval in the future. Project W-049H effluent will be disposed either to the ground or to the Columbia River. If the ground disposal alternative is selected, the preferred disposal site will be characterized in accordance with the requirements of WAC 173-216 (Ecology 1991e) and WAC 173-240 (Ecology 1991g). Project W-049H may provide retention and verification of the effluent quality before discharge. Retention may occur at the wastewater source facilities, or at downstream locations within the collection and conveyance system. Retention capabilities of Project W-049H, if deemed appropriate, will be described in the WAC 173-240 engineering report, which will be submitted to Ecology for approval. It is anticipated with the completion of the Project W-049H, continual monitoring will be implemented to ensure regulatory compliance.

The fly ash sluice pit for the power plants needs to be characterized to substantiate that there are no source terms requiring monitoring. It is scheduled for disposition during fiscal year 1993, consistent with the Tri-Party Agreement. Until the implementation of BAT, the 200 West Power Plant will continue to discharge the liquid streams to the 284W-B-Pond and the 200 East Power Plant liquid streams will continue to discharge to the 216-B-3-Pond. The SAPs have been prepared to address sampling and monitoring.

9 3 1 2 8 5 4 1 9 7 7

This page intentionally left blank.

9 3 1 2 3 6 4 1 9 7 8

16.0 ATTACHMENTS

16.1 REFERENCES

ASNI/ASME, 1981, *"Performance Test Codes*, "Flue and Gas Analysis, Instruments and Apparatus," ASNI/ASME PTC 19.10, Part 10, American National Standards Institute and American Society of Mechanical Engineers, New York, New York.

ASME, 1989, *American Society of Mechanical Engineers Boiler and Pressure Vessel Code*, The American Society of Mechanical Engineers, New York, New York.

APCA, 1980, *General Regulation 80-7 of the Benton-Franklin-Walla Walla Counties Air Pollution Control Authority* (APCA), Board of Directors of the Benton-Franklin-Walla Counties Air Pollution Control Authority, Richland, Washington.

Brown, M. J., et al., 1990, *Westinghouse Hanford Company Effluent Discharges and Solid Waste Management Report for Calendar Year 1989: 200/600 Areas*, WHC-EP-014102, Westinghouse Hanford Company, Richland, Washington.

Clean Air Act of 1977, as amended, 41 USC 7401.

Clean Water Act of 1977, as amended, 33 USC 1251.

Comprehensive Environmental Response, Compensation, and Liability Act of 1980, as amended, 41 USC 9601 et seq.

DOE, 1981, *Environmental Protection, Safety, and Health Protection Information Reporting Requirements*, DOE Order 5484.1, U.S. Department of Energy, Washington, D.C.

DOE, 1988a, *General Environmental Protection Program*, DOE Order 5400.1, U.S. Department of Energy, Washington, D.C.

DOE, 1988b, *Radioactive Waste Management*, DOE Order 5820.2A, U.S. Department of Energy, Washington, D.C.

DOE, 1990a, *Radiation Protection of the Public and the Environment*, DOE Order 5400.5, U.S. Department of Energy, Washington, D.C.

DOE, 1990b, *Occurrence Reporting and Processing of Operations Information*, DOE Order 5000.3A, U.S. Department of Energy, Washington, D.C.

DOE, 1991, *Environmental Regulatory Guide for Radiological Effluent Monitoring and Environmental Surveillance*, DOE/EH-0173T, U.S. Department of Energy, Washington, D.C.

Ecology, 1991a, "Minimum Functional Standards for Solid Waste Handling," Washington Administrative Code 173-304, as amended, Washington State Department of Ecology, Olympia, Washington.

Ecology, 1991b, "Dangerous Waste Regulations," Washington Administrative Code 173-303, Washington State Department of Ecology, Olympia, Washington.

Ecology, 1991c, "General Regulations of Air Pollution," Washington Administrative Code 173-400, Olympia, Washington.

Ecology, 1991d, "Ambient Air Quality Standards and Emission Limits for Radionuclides," Washington Administrative Code 173-480, as amended, Washington State Department of Ecology, Olympia, Washington.

Ecology, 1991e, "State Waste Discharge Permit Programs," Washington Administrative Code 173-216, Olympia, Washington.

Ecology, 1991f, "Underground Storage Tank Regulations," Washington Administrative Code 173-360, Washington State Department of Ecology, Olympia, Washington.

Ecology, 1991g, "Submission Plans and Reports for Construction of Wastewater Facilities," Washington Administrative Code 173-240, Olympia, Washington.

Ecology, et al., 1991, *Hanford Federal Facility Agreement and Consent Order*, Volumes 1 and 2, Washington State Department of Ecology, U.S. Environmental Protection Agency, and U.S. Department of Energy, Olympia, Washington.

Ecology and DOE, 1992, "In the Matter of the Compliance by the United States Department of Energy with Chapters 70.105 and 90.48 RCW and the Rules and Regulations of the Department of Ecology," Consent Order DE 91NM-177 (for the permitting of liquid effluent discharges under Washington Administrative Code 173-216), Washington State Department of Ecology and U.S. Department of Energy, Olympia, Washington.

EPA, 1986, *Test Methods for Evaluating Solid Waste: Physical/Chemical Methods*, SW-846, 3rd Edition, U.S. Environmental Protection Agency, Washington, D.C.

EPA, 1989, *Federal Register*, Volume 54, Number 13, U.S. Environmental Protection Agency, Washington, D.C.

EPA, 1991a, "Identification and Listing of Hazardous Waste," Title 40, Code of Federal Regulations, Part 261, U.S. Environmental Protection Agency, Washington, D.C.

EPA, 1991b, "Designation, Reportable Quantities, and Notification," Title 40, Code of Federal Regulations, Part 302, U.S. Environmental Protection Agency, Washington, D.C.

EPA, 1991c, "National Emission Standards for Hazardous Air Pollutants," Title 40, Code of Federal Regulations, Part 61, U.S. Environmental Protection Agency, Washington, D.C.

9 3 1 2 8 5 4 1 9 8 0

EPA, 1991d, "Approval and Promulation of Implementation Plans," Title 40, Code of Federal Regulations, Part 52, U.S. Environmental Protection Agency, Washington, D.C.

EPA, 1991e, "National Primary Drinking Water Regulations," Title 40, Code of Federal Regulations, Part 141, as amended, U.S. Environmental Protection Agency, Washington, D.C.

EPA, 1991f, "Subchapter N--Effluent Guidelines and Standards," Title 40, Code of Federal Regulations, Parts 401-471, U.S. Environmental Protection Agency, Washington, D.C.

EPA, 1991g, "Requirements for Preparation, Adoption, and Submittal of Implementation Plans," Title 40 Code of Federal Regulations, Part 51, U.S. Environmental Protection Agency, Washington, D.C.

EPA, 1991h, "Technical Standards and Corrective Action Requirements for Owners and Operators of Underground Storage Tanks, Title 40, Code of Federal Regulations, Part 280, U.S. Environmental Protection Agency, Washington, D.C.

EPA, 1991i, "Approval of State Underground Storage Tank Programs," Title 40, Code of Federal Regulations, Part 281, U.S. Environmental Protection Agency, Washington, D.C.

EPA, 1991j, *U.S. Environmental Protection Agency Regulations on Standards of Performance for New Stationary Sources*, U.S. Environmental Protection Agency, Washington, D.C.

HEHF, 1990, *Monitoring of Mercury Spill Cleanup, 284-W, 200W Area*, Letter CO 15630, H. N. Bowers, Westinghouse Hanford Company from C. H. St. John, Hanford Environmental Health Foundation, Richland, Washington.

HEHF, 1991, *Mercury Cleanup Evaluation for Release of Area, 284-W Power House, 200W Area*, Letter CO 16614, P. M. Hickey, Westinghouse Hanford Company from K. A. Lavaty, Hanford Environmental Health Foundation, Richland, Washington.

PNL/WHC, 1989, "Ash Analyzer Memorandum of Understanding," Pacific Northwest Laboratory and Westinghouse Hanford Company, Richland, Washington.

Resource Conservation and Recovery Act of 1976, as amended, 41 USC 6901, Safe et seq.

Safe Drinking Water Act of 1974, as amended, 42 USC 300f et seq.

Washington Clean Air Act of 1967, as amended, RCW 70.94, Revised Code of Washington, Olympia, Washington.

WDOH, 1991, "Radiation Protection Air Emissions," Washington Administrative Code Chapters 246-247, as amended, Washington State Department of Health, Olympia, Washington.

WHC, 1988a, *Operational Environmental Monitoring*, WHC-CM-7-4, as amended, Westinghouse Hanford Company, Richland, Washington.

WHC, 1988b, *Westinghouse Hanford Company Environmental Surveillance Annual Report - 200/600 Areas*, as amended, WHC-EP-0145, Westinghouse Hanford Company, Richland, Washington.

WHC, 1989a, *Analytical Chemistry Services Laboratories Quality Assurance Plan*, WHC-SD-CP-QAPP-001, Westinghouse Hanford Company, Richland, Washington.

WHC, 1989b, *Quality Assurance Project Plan for the Chemical Analysis of Highly Radioactive Mixed Waste Samples in Support of Environmental Activities on the Hanford Site*, WHC-SD-CP-QAPP-002, Westinghouse Hanford Company, Richland, Washington.

WHC, 1990a, *Management Requirements and Procedures*, WHC-CM-1-3, as amended, Westinghouse Hanford Company, Richland, Washington.

WHC, 1990b, *Quality Assurance Program Plan for the Chemical Analysis of Environmental Samples*, WHC-SD-CP-QAPP-003, Westinghouse Hanford Company, Richland, Washington.

WHC, 1990c, *Mercury Spill* (Event Fact Sheet), SWU-90-014, Westinghouse Hanford Company, Richland, Washington.

WHC, 1990d, *200 Area Steam and Water Utilities Operations Administration Procedure*, WHC-IP-0568, SWU2-A-013, "200 Area Steam and Water Utilities Operation Emergency Spill Response, Mercury," Westinghouse Hanford Company, Richland, Washington.

WHC, 1991a, *A Guide for Preparing Hanford Site Facility Effluent Monitoring Plan Activities*, WHC-EP-0438, Westinghouse Hanford Company, Richland, Washington.

WHC, 1991b, *Environmental Compliance*, WHC-CM-7-5, Westinghouse Hanford Company, Richland, Washington.

WHC, 1991c, *Facility Effluent Monitoring Plan Determination for the 200 Area Facilities*, WHC-EP-0440, Westinghouse Hanford Company, Richland, Washington.

WHC, 1991d, *Level III 200 Area Support Services Manual*, WHC-CM-8-2, Westinghouse Hanford Company, Richland, Washington.

WHC, 1991e, *Quality Assurance Project Plan for Facility Effluent Monitoring Plan Activities*, WHC-EP-0446, Westinghouse Hanford Company, Richland, Washington.

WHC, 1991f, *Office of Sample Management Administrative Manual*, WHC-CM-5-3, Westinghouse Hanford Company, Richland, Washington.

WHC, 1991g, *Environmental Investigations and Site Characterization Manual*, WHC-CM-7-7, Westinghouse Hanford Company, Richland, Washington.

WHC, 1991h, *200 Area Steam and Water Utilities Operations Administration Procedure*, WHC-IP-0568, SWU2-A-020, "Chain-of-Custody," Westinghouse Hanford Company, Richland, Washington.

WHC, 1991i, *Management Policies*, WHC-CM-1-1, MP 5.1, "Environmental Assurance," Westinghouse Hanford Company, Richland, Washington.

WHC, 1991j, *Facility Effluent Management Plan for 200 Area Activities*, WHC-EP-0491, Westinghouse Hanford Company, Richland, Washington.

WHC, 1991k, *Liquid Effluent Sampling Quality Assurance Project Plan*, WHC-SD-WM-QAPP-011, Westinghouse Hanford Company, Richland, Washington.

WHC, 1991l, *Occurrence Report Notification*, WHC-91-0195-RO, Westinghouse Hanford Company, Richland, Washington.

WHC, 1992a, *Sampling and Analysis Plan for the 284W Area Powerplant and 277W Fabrication Shop Wastewater Streams*, WHC-SD-WM-PLN-033, Westinghouse Hanford Company, Richland, Washington.

WHC, 1992b, *Sampling and Analysis Plan of the 284E Area Powerplant Process Wastewater Streams*, WHC-SD-WM-PLN-034, Westinghouse Hanford Company, Richland, Washington.

WHC, 1992c, *200 Area Treated Effluent Disposal Facility Wastewater (Project W-0491) Efficiency Report*, WHC-SD-W049H-ER-003 Rev. 0, Westinghouse Hanford Company, Richland, Washington.

16.2 REGULATIONS

40 CFR 50 4-7, 1971 - Clean Air Act 1970 (amended 1977), U.S.C. 7401, Established National Ambient Air Quality Standard for Particulate (NAAQS).

40 CFR, Part 51, Appendix P, Sec. 3, 4, and 5 - Minimum Emission Monitoring Requirements.

40 CFR, Part 61, Subpart A, "General Provisions" - List of hazardous air pollutants.

40 CFR 141, "National Interim Primary Drinking Water Regulations (Safe Drinking Water Act)" - Although not applicable to U.S. Department of Energy (DOE) operated drinking water systems, it is the policy of DOE to provide and equivalent level of protection for all persons consuming the water from a drinking water supply operated by, or for, the DOE.

40 CFR 261.3(b) - Characterization of dangerous waste pollutants at the point of discharge.

40 CFR 261(4)(b)(6) - Hazardous Waste Exclusions - Fly ash waste, bottom ash waste, slag waste, or flue gas emissions control waste generated primarily from combustion of gas or other fossil fuel.

40 CFR 302, "Designation, Reportable Quantities, and Notification" - U.S. Environmental Protection Agency (EPA) regulation pertaining to the release of hazardous substances.

40 CFR, Part 403-471 - Categorical processes are identified, specific limitations, monitoring, and reporting requirements have been promulgated for each categorical process.

DOE Order 5484.1, Chapter III, "Effluent and Environmental Monitoring Requirements" - Specific information on the requirements for effluent monitoring systems and programs at the Hanford Site.

DOE Orders 5400.1, 5400.5, and DOE/EH-0173T (1991) - Radioactive and Nonradioactive pollutant effluents released at the Hanford Site. Shall be monitored to determine compliance.

CERCLA, Section 101(14) and 102 (a) *Comprehensive Environmental Response, Compensation, and Liability Act of 1980* (CERCLA) - Designates those substances in the statistics of CERCLA, identifies reportable quantities of these substances, and sets forth the notification requirements for release of these substances.

Clean Water Act, Section 311(b)(2)(A) - Sets forth reportable quantities for hazardous substance designated under CERCLA.

Washington Administrative Code (WAC) 173-303-070 through WAC 303-103, designates Dangerous Wastes.

Resource Conservation and Recovery Act Subtitle C - Regulations pertaining to "Solid Waste", any garbage, refuse, sludge from a waste treatment plant, or air pollution control facility.

Washington Clean Air Act, WAC 173-400 - General instructions for air pollution sources. WAC 173-400-075 - Emission standards for sources emitting hazardous air pollutants.

Standards for nonradioactive airborne effluents: WAC 173-201, WAC 173-210, WAC 173-216, WAC 173-218, WAC 173-220, WAC 173-400-040, -050, -060, -075, and -120.

WAC 173-216 - Controls discharges to ground and surface waters of the State of Washington.

Local Air Pollution Control Authority (APCA), General Regulations 80.7 of Benton-Franklin-Walla Walla Counties APCA - Local Standards for airborne effluents.

16.3 GLOSSARY

Accuracy. The degree of agreement of a measurement, with an accepted reference of true value, usually expressed as the difference between the two values or the difference as a percentage of the reference or true value.

Air Pollution Control Authority. Any air pollution control agency whose jurisdictional boundaries are co-extensive with the boundaries of one or more counties.

Ambient Air Quality Standard. An established concentration, exposure time, and frequency or occurrence of a contaminant or multiple contaminants in the air not to be exceeded.

Bias. A systematic (consistent) error in test results. Bias can exist between test results and the true value (i.e., absolute bias, or lack of accuracy), or between results from different sources (i.e., relative bias). For example, if different laboratories analyze a homogeneous and stable blind sample, the relative biases among the laboratories would be measured by the differences existing among the results from the different laboratories. However, if the true value of the blind sample were known, the absolute bias or lack of accuracy from the true value would be known for each laboratory.

Blanks. Consist of pure deionized, distilled water transferred to a sample container at the site and preserved with the reagent specified for the analytes of interest. They are used to check for possible contamination originating with the reagent or the sampling environment and are normally collected as frequently as duplicate samples.

Blind Sample. A blind sample refers to any type of sample routed to the primary laboratory for auditing performance relative to a particular sample matrix and analytical method. Blind samples are not specifically identified as such to the laboratory; they may be made from traceable standards, or may consist of sample material spiked with a known concentration of a known compound.

Blowdown. Water removed under pressure from the boiler to eliminate sediment and reduce total solids.

Boiler. A vessel in which steam or other vapor is generated for use external to itself; a watertube boiler is a boiler in which the tubes contain water and steam, the heat being applied to the outside surface.

Contractual Quantitation Limit. The contractual quantitation limit (CQL) represents the lowest level of quantitation agreed on by the analytical laboratory and formally established in applicable contracts or work orders that the laboratory attests can be reliably achieved within contractually (or work order) established limits of precision and accuracy under routine laboratory operating conditions. The CQL is based on analytical experience and the data needs of individual projects; it represents the minimum acceptable standard against which analytical data will be judged.

Duplicate Sample. Are samples retrieved from the same sampling location using the same equipment and sampling technique as the original sample. They are placed in separate identically prepared and preserved containers, and analyzed independently. Duplicate samples are generally used to verify the repeatability or reproducibility of analytical data and are normally analyzed with each analytical batch or every 20 samples, whichever is greater.

Effluent. Any treated or untreated air emission or liquid discharge at a U.S. Department of Energy (DOE) site or from a DOE facility. The term includes onsite discharge to the atmosphere, lagoons, ponds, cribs, injection wells, French drains, or ditches. The term does not include solid waste stored or removed for disposal or wastes contained in retention basins or tanks before treatment and/or disposal.

Effluent Monitoring. The collection and analysis of samples or measurements of liquid and gaseous effluents for characterizing and quantifying contaminants, assessing radiation exposures of members of the public, providing a means to control effluents at or near the point of discharge, and demonstrating compliance with applicable standards and permit requirements.

Emission. A release of contaminants into the ambient air or the contaminant material so released.

Emission Standard. A regulation (or portion thereof) setting forth an allowable rate of emissions and level of opacity; or prescribing equipment or fuel specifications that results in control of air pollution emission.

Flue Gases. The gaseous products of combustion in the flue to the stack.

Fossil Fuel/Fired Steam Generator. A furnace or boiler used in the process of burning fossil fuel for the primary purpose of producing steam by heat transfer.

Fugitive Dust. A type of particulate emission made airborne by forces of wind, human activity, or both (e.g., unpaved roads, construction sites, or tilled land). Two major categories are anthropogenic sources (those that result directly from and during human activities) and wind erosion sources (those that result from erosion of soil by wind). Fugitive dust is distinguished from fugitive emissions.

Fugitive Emissions. Contaminants that are generated by industrial or other activities not covered by the fugitive dust definition released to the atmosphere through openings such as windows, vents, doors, ill fitting oven closures, rather than primary exhaust systems or are re-entrained from unenclosed material handling operations. Aggregate storage operations and active tailing pile are included in this category of sources.

Grate. The surface on which fuel is supported and burned, and through which air is passed for combustion.

Internal Quality Control. The routine activities and checks, such as periodic calibrations, duplicate analyses, use of spiked samples, included in normal internal procedures to control the accuracy and precision of a measurement process.

Matrix Spike Samples. A type of laboratory-quality control sample; they are prepared by splitting a sample received from the field into two homogenous aliquot (i.e., replicate samples) and adding a known quantity of a

7312364198 6

representative analyte of interest to one aliquot to calculate the percent of recovery. One of the aliquot is designated as the matrix spike, the other as the matrix spike duplicate.

Opacity. The degree to which an object seen through a smoke or vapor plume is obscured.

Potential Emission. An unexpected occurrence that may result in emissions in excess of emission standards upset.

Precision. A measure of the repeatability or reproducibility of specific measurements under a given set of conditions. Specifically, it is a quantitative measure of the variability of a group of measurements compared to their average value. Precision is normally expressed in terms of standard deviation, but may also be expressed as the coefficient of variation (i.e., relative standard deviation) and range (i.e., maximum value minus minimum value). Precision is assessed by means of duplicate/replicate sample analysis.

Quality Assurance. For the purposes of effluent monitoring, quality assurance refers to the total integrated quality planning, quality control, quality assessment, and corrective action activities that collectively ensure that data from monitoring and analysis meets all end user requirements and/or the intended end use of the data.

Quality Assurance Project Plan. The quality assurance project plan is an orderly assembly of management policies, project objectives, methods, and procedures that defines how data of known quality will be produced for a particular project, investigation, or monitoring program.

Quality Control. For the purposes of effluent monitoring, quality control refers to the routine application of procedures and defined methods to the performance of sampling, measurement, and analytical processes.

Sample. A physical specimen of air or water.

Zeolite. Originally a group of natural minerals capable of removing calcium and magnesium ions from water replacing them with sodium. The term has been broadened to include synthetic resins that similarly soften water by ion exchange.

This page intentionally left blank.

9 3 1 2 3 6 4 1 9 8 8

9 3 1 2 8 6 4 1 9 8 9

ATTACHMENT A

LETTER REPORT: ASH ANALYSIS

This page intentionally left blank.

9 3 1 2 8 6 4 1 9 9 0

Battelle
Pacific Northwest Laboratories
P.O. Box 999
Richland, Washington U.S.A. 99352
Telephone (509) 376-0989
Telex 15-2874

January 23, 1986

Mr. V. E. Winston
2722E/200E Area
Rockwell Hanford Operations
P.O. Box 800
Richland, Washington 99352

Dear Mr. Winston:

SUBJECT: ASH ANALYSES

Previous results were transmitted orally and apparently were never documented.

Our data show:

Soluble Components

Sample / Parameter*	284W #1 Bag House Mod #2	284E #2 Boiler Walls of Firebox	284E #1 Bag House Mod #5	284E #2 Bag House Mod #5	Ash Pit 200E
Chloride	124	576	25	78	13
Nitrite	18	57	7	167	--
Phosphate	29	--	31	115	∿25
Nitrate	4	--	--	--	--
Sulfate	1270	260	47	3330	230
Oxalate	37	--	--	--	--
Carbon	0.1%	0.14%	.009%	est. 80-90%	--
Aluminum	7080	3000	5700	4650	1400
Calcium	8480	9400	12000	4750	2500
Iron	730	5000	370	850	930
Silicon	4600	2000	3200	2400	560
Phosphorus	1500	1100	3200	480	880
Misc.	1000	2000	1500	1500	900

*Except as noted, all values are ppm in solid. (0.1 wt.% = 1000 ppm)

9312864199 1

Mr. V. E. Winston
January 23, 1986
Page 2

These analyses were based on samples obtained by leaching the solid with deionized water. The insoluble residue, based on X-ray analysis, contains iron, zirconium, and barium, as well as miscellaneous materials.

There is sufficient chloride and sulfate when combined with a little water to make very corrosive solution.

Respectfully,

J. R. Divine
Staff Engineer
Corrosion Research and Engineering

JRD:pl

cc: E. Borders / RHO

9 3 1 2 8 6 4 1 9 9 2

ATTACHMENT B

LETTER REPORT: NOTIFICATION OF LONG-TERM STORAGE AND DISPOSAL OF COAL-FIRED STEAM PLANT ASH ON THE HANFORD SITE

This page intentionally left blank.

9 3 1 2 8 6 4 1 9 9 4

CORRESPONDENCE DISTRIBUTION COVERSHEET

Author	Addressee	Correspondence No.
G. L. Laws, 376-1264	R. D. Izatt, RL	9255369D

Subject: NOTIFICATION OF LONG-TERM STORAGE AND DISPOSAL OF COAL-FIRED STEAM PLANT ASH ON THE HANFORD SITE

INTERNAL DISTRIBUTION

Approval	Date	Name	Location	w/att
		Correspondence Control	A3-01	X
		President's Office	B3-01	
		G. D. Carpenter	B2-16	X
		C. K. DiSibio	B3-03	
		C. J. Geier	B2-19	
		D. R. Herman	S4-01	X
		R. J. Landon	B2-19	
X Gail L. Laws	7/24/92	G. L. Laws	H4-57	X
		R. E. Lerch	B2-35	
		J. J. Luke	H4-57	
		P. J. Mackey	B3-15	
		H. E. McGuire	B3-63	
X Gail L. Laws via telecon	7/24/92	T. E. Morris	S4-01	X
X	7/24/92	R. W. Oldham	H4-57	
X	7/27/92	S. M. Price	H4-57	
X	7/27/92	J. M. Ring	H4-57	
		G. S. Robinson	N2-13	X
		W. A. Skelly	H4-55	
X Gail L. Laws via telecon	7/28/92	N. P. Willis	N3-11	
		C. D. Wittreich	H4-55	
		EDMC	H4-22	X
		GLL/File/LB	H4-57	X

9312354199 5

54-6000-117 (9/88) (EF) WEF008
Distribution Coversheet

Westinghouse
Hanford Company

P.O. Box 1970 Richland, WA 99352

July 28, 1992 9255369D

Mr. R. D. Izatt, Program Manager
Office of Environmental Assurance,
Permits, and Policy
U.S. Department of Energy
Richland Field Office
Richland, Washington 99352

Dear Mr. Izatt:

NOTIFICATION OF LONG-TERM STORAGE AND DISPOSAL OF COAL-FIRED STEAM PLANT ASH ON THE HANFORD SITE

The enclosed letter provides the Benton-Franklin District Health Department (BFDHD) with notification of long-term storage and disposal of coal-fired steam plant ash on the Hanford Site. The enclosure requests confirmation of a regulatory interpretation that allows for continued coal ash storage and disposal on the Hanford Site, without permits issued under Chapter 173-304 of the Washington Administrative Code (WAC). This request for confirmation is similar to a 1989 U.S. Department of Energy, Richland Field Office (RL) request to operate inert/demolition landfills on the Hanford Site, without permits.

Coal ash is generated by three steam plants located in the 200 East, 200 West, and 300 Areas of the Hanford Site. Long-term ash storage and disposal activities are conducted in areas adjacent to the three steam plants. Steam plant ash is collected in piles, disposal basins, and retention pits. The storage and disposal areas are owned by the U.S. Government, and the ash is considered to be government-owned material generated by Hanford Site activities.

Based on results of recent coal ash sampling and analysis activities, the coal ash has been determined to be nondangerous and not regulated under WAC 173-303. The Hanford Site coal ash is an inert, nonradioactive, nonhazardous waste, regulated under WAC 173-304.

In 1989, the BFDHD and the State of Washington Department of Ecology provided guidance, pursuant to the Revised Code of Washington (RCW) 70.95.240, authorizing RL to dispose of its own inert/demolition waste on its own land, without permits. The RL interprets this guidance to be applicable to the long-term storage and disposal of coal ash on the Hanford Site, and requests regulatory confirmation of this interpretation. Long-term storage and disposal of coal-fired ash will continue without permits, as allowed under RCW 70.95.240, unless notification is received that a permit is, in the regulator's view, required. In the event a permit is required, a subsequent transmittal will be prepared, documenting facility specific information for each ash storage and disposal site.

9 3 1 2 8 5 4 1 9 9 6

Mr. R. D. Izatt
Page 2
July 28, 1992

9255369D

Should you have any questions, please contact Ms. S. M. Price of my staff on 376-1653.

Very truly yours,

R.H. Engel for

C. J. Geier
Regulatory Assessment, Permitting,
& NEPA Function

ikt

Enclosure

RL - R. O. Puthoff (w/o enclosure)
R. P. Saget
S. D. Stites
W. A. White

9255369D

Enclosure

9 3 1 2 8 5 4 1 9 9 8

Department of Energy
Richland Operations Office
P.O. Box 550
Richland, Washington 99352

Mr. J. R. Dawson, Supervisor
Land Use, Liquid Waste, and Water Programs
Benton-Franklin District Health Department
800 West Canal Drive
Kennewick, Washington 99336

Dear Mr. Dawson:

NOTIFICATION OF LONG-TERM STORAGE AND DISPOSAL OF COAL-FIRED STEAM PLANT ASH ON THE HANFORD SITE

This letter provides the Benton-Franklin District Health Department (BFDHD) with notification of long-term storage and disposal of coal-fired steam plant ash on the Hanford Site. The U.S. Department of Energy, Richland Field Office (RL) requests confirmation of a regulatory interpretation that allows for continued coal ash storage and disposal on the Hanford Site, without permits issued under Chapter 173-304 of the Washington Administrative Code (WAC). This request is similar to a 1989 RL request to operate inert/demolition landfills on the Hanford Site, without permits.

The coal ash is generated by three steam plants located in the 200 East, 200 West, and 300 Areas of the Hanford Site (Enclosure 1, Figures 1 through 4). Ash storage and disposal activities are conducted in areas adjacent to the three steam plants. Steam plant ash is collected in piles, disposal basins, and retention pits. The ash storage and disposal areas are owned by the U.S. Government, and the ash is considered to be government-owned material generated by Hanford Site activities.

Based on results of recent coal ash sampling and analysis activities, the coal ash has been determined to be nondangerous and not regulated under WAC 173-303. The Hanford Site coal ash is an inert, nonradioactive, nonhazardous waste, regulated under WAC 173-304.

In 1989, the BFDHD and the State of Washington Department of Ecology provided guidance, pursuant to the Revised Code of Washington (RCW) 70.95.240, authorizing RL to dispose of its own inert/demolition waste on its own land, without permits (Enclosure 2). The RL interprets this guidance to be applicable to the long-term storage and disposal of coal ash on the Hanford Site, and requests regulatory confirmation of this interpretation. Long-term storage and disposal of coal-fired ash will continue without permits, as allowed under RCW 70.95.240, unless notification is received that a permit is, in the regulator's view, required. In the event a permit is required, a subsequent transmittal will be prepared, documenting facility-specific information for each ash storage and disposal site.

9 3 1 2 3 6 4 1 9 9 9

Should you have any questions regarding this request, please contact Mr. S. D. Stites of my staff on (509) 376-8566.

Sincerely,

R. D. Izatt, Program Manager
Office of Environmental Assurance,
Permits, and Policy

Enclosures:
1. Hanford Site Area Maps
2. August 29, 1989 Regulatory Response

cc: R. W. Oldham, WHC
R. E. Lerch, WHC

9 3 1 2 8 6 4 2 0 0 0

Enclosure 1

9 3 1 2 8 6 4 2 0 0 1

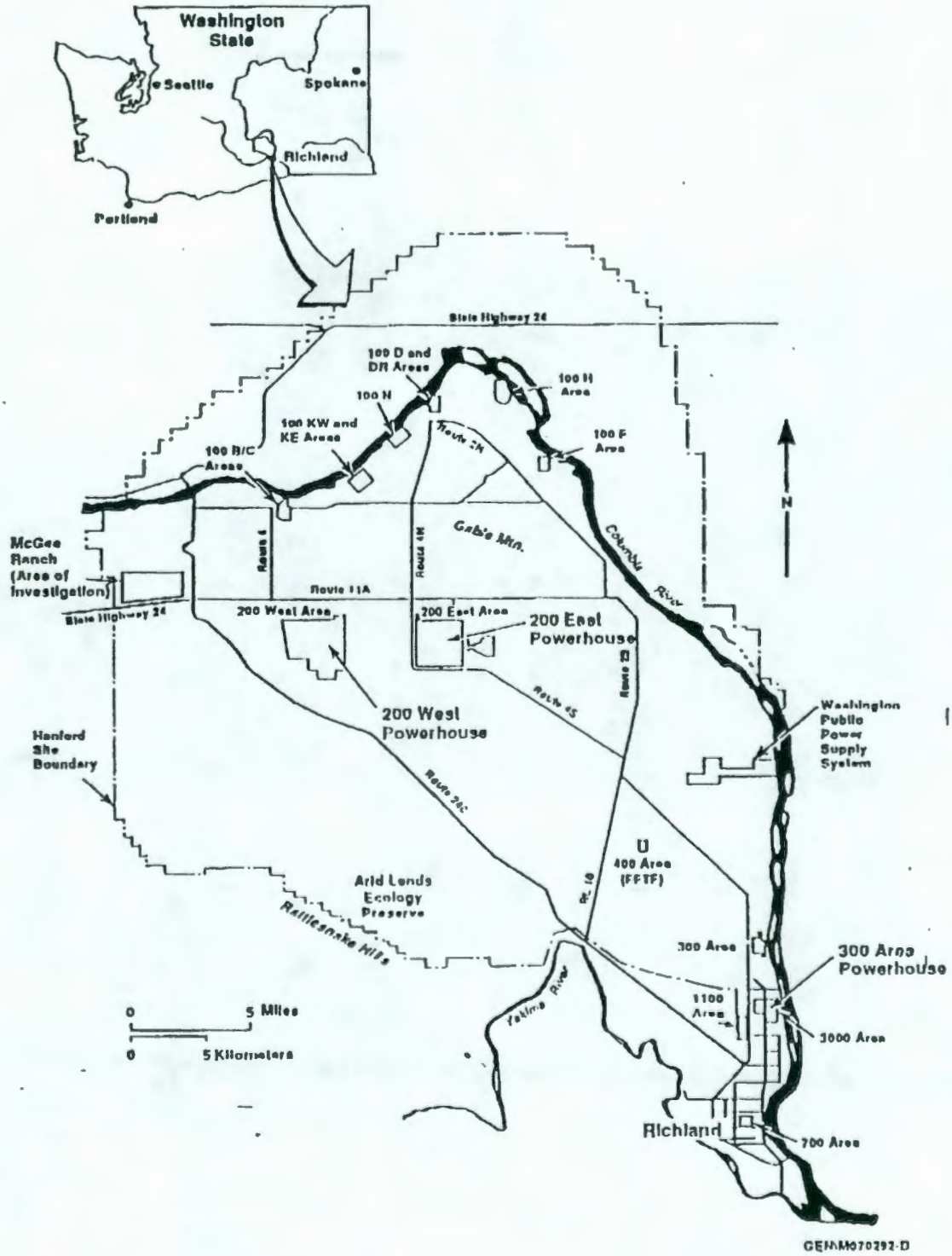

Figure 1. Hanford Site

9 3 1 2 3 5 4 2 0 0 2

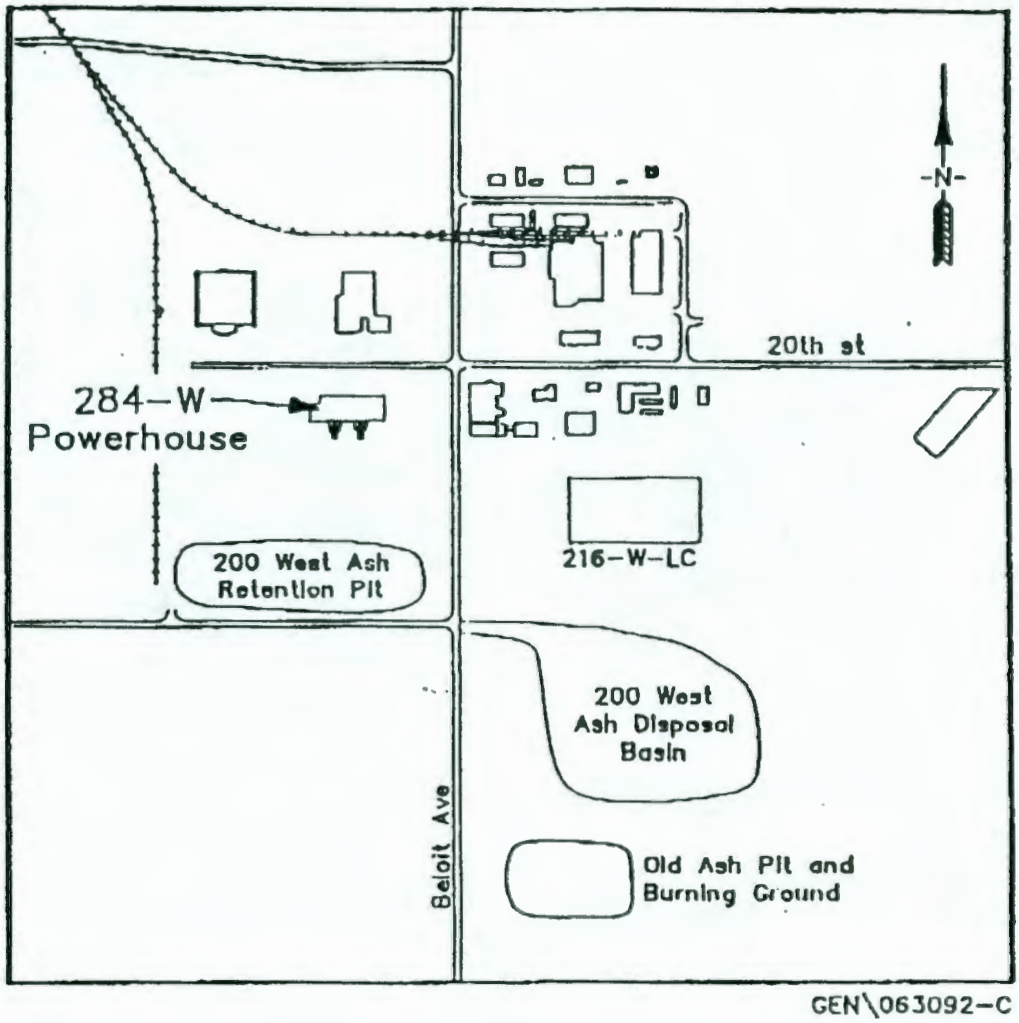

Figure 2. 200 West Area Powerhouse and Ash Handling Sites

9 3 1 2 3 6 4 2 0 0 3

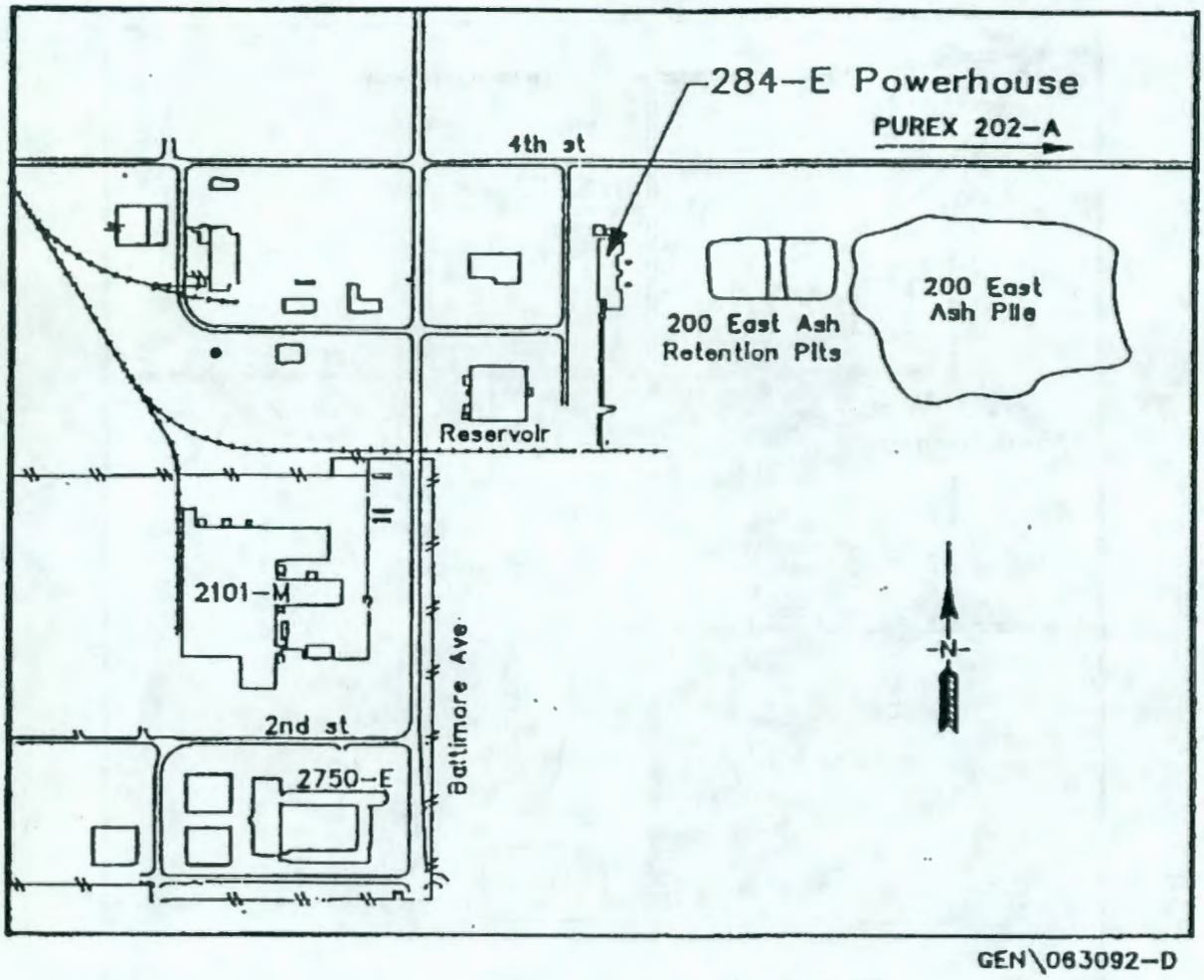

Figure 3. 200 East Area Powerhouse and Ash Handling Sites

9 3 1 2 8 6 4 2 0 0 4

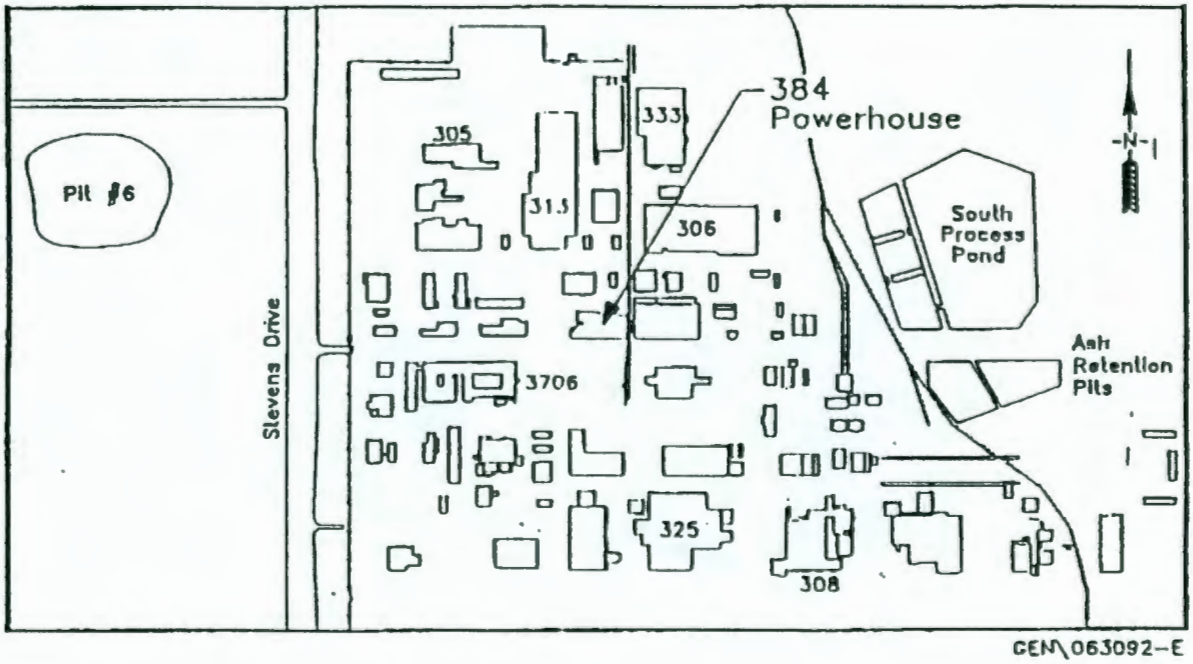

Figure 4. 300 Area Powerhouse and Ash Handling Sites

Enclosure 2

9 3 1 2 8 6 4 2 0 0 6

B/F
H/D

DISTRICT HEALTH DEPARTMENT
304 McKENZIE
(509) 943-3860
RICHLAND, WA 99352

District Health Officer
Harold M. Sorouse, M.D., M.S.
Director, Personal Health Services
Stanley V. Vancem, R.S.
Director, Environmental Health Services
Joyce H. Tucker, Director
Administrative Services

29 August, 1989

AUG 30 1989

CC EAB/RDZ/RDI
DLD

R. D. Izatt
Environmental Restoration Division
U.S. D.O.E. Richland Operation
P.O. Box 550
Richland, WA 99352

RECEIVED DOE-RL
SEP 1 1989
FFD/P & P RD

Dear Mr. Izatt:

This is to respond to your letter of 26 July, 1989, seeking our views on the matter of the U.S. DOE (RL) intent to operate inert/demolition landfills on the Hanford site.

With regard to the specific site designated as "PIT 10", we have the following comments/observations:

a. The project intended for PIT 10 is the 1166 building. The 1166 building is largely one of concrete, structural steel beams, large wooden timbers in the roof, plywoods, glass, wiring and plumbing materials.

b. It is assumed that items such as the huge roll up doors, light fixtures, ventilation systems (not ducts) interior metal shelving and such will be salvaged and either excessed or sold as scrap vs disposed.

c. The actual disposal site location for PIT 10 was inspected during a joint visit (4-19-89) with US DOE (RL) personnel, Curt Whitterich and Carol Geier. The site presents no apparent problems, but we did suggest information be obtained for the record regarding the depth to ground water and its direction of flow as well as specifically surveying the site so it's location can be marked for posterity.

Regarding the larger issue of whether or not the local health department should be issuing permits to the U.S. DOE, please note the following:

WAC 173-304-461 sets forth the essential requirements for inert/demolition waste sites. One of these is that they be permitted. The local health department is the agency that would issue such permits. However, RCW 70.95.240 provides for you (US DOE) to dispose of your own waste on your own land as long as you do not violate statutes, ordinances, or create a nuisance.

On 31 July, 1989, this department requested concurrence from the Washington State Department of Ecology (WDOE) with this position. On 15 August, 1989, we received concurrence, in writing from the WDOE (copy attached).

HEALTH CENTERS

1314 W FOURTH
PASCO WA 99301
PHONE 547-8931

1020 PROSSER AVE.
PROSSER, WA 99350
PHONE 786-1631

409 SO DAYTON
KENNEWICK WA 99336
PHONE 586-0207

9312354200 7

As noted in the WDOE concurrence, there are three (3) stipulations:

1. The landfill must comply with the requirements of WAC 173-304-461.

2. Demolition waste from commercial sources shall not be accepted.

3. Demolition waste generated off the Hanford Reservation shall not be accepted.

Therefore, we feel the issue is closed. Permits for the demolition sites requested are not required.

I hope this satisfies your agency concerns in this matter. Please call or write if further clarification is needed.

Sincerely,

Lawrence D. Kamberg

Lawrence D. Kamberg, R.S., Supervisor
Environmental Health Surveillance Section

cc: Steve Lowe, Benton County
C. J. Geier, WHC
R. E. Lerch, WHC
Dick Bassett, WDOE

9 3 1 2 8 5 4 2 0 0 8

DISTRICT HEALTH DEPARTMENT
204 McKENZIE
(509) 943-2814
RICHLAND, WA 99352

District Health Officer
Harrison M. Spencer, M.D., M.S.
Director, Personal Health Services
Stanley V. Vendom, R.S.
Director, Environmental Health Services
Joyce H. Tucker, Director
Administrative Services

July 31, 1989

Mr. Dick Bassett
WA State Dept. of Ecology
3601 West Washington St.
Yakima, WA 98903

Dear Mr. Bassett:

This department has been requested to permit eight (8) U.S. Dept. of Energy Richland Operations (USDOE RL) inert/demolition waste landfill sites (see attached correspondence). The site referred to as Pit 10 has been visited by us in Mid April 1989. At this time, the site has not received any waste. We have also inspected the 1166 building which is the source of all Pit 10 wastes and have a number of recommendations which should be agreed to before commencing demolition.

However, it is our firm contention that RCW 70.95.240 provides for them (USDOE RL) to dispose of their solid wastes without a permit from this department. What we need from Washington Department of Ecology is concurrence with this position, in writing, as soon as practicable.

Please do not hesitate to call if you need more information.

Sincerely,

Lawrence D. Kamberg

Lawrence D. Kamberg, R.S., Supervisor
Environmental Health Surveillance Section

LDK:ldk

Enclosure

cc: Steve Lowe

9312364200 9

CALCOMBE
Director

STATE OF WASHINGTON
DEPARTMENT OF ECOLOGY
3601 W. Washington • Yakima, Washington 98903-1161 • (509) 575-2800

August 15, 1989

Lawrence D. Kamberg
Environmental Health
Benton Franklin Health District
506 McKenzie
Richland, WA 99352

RE: U.S. Department of Energy Landfill Request

Dear Lawrence:

I have reviewed your letter dated July 31, 1989 concerning the U.S. Doe request for demolition landfill permits. Ecology concurs with your interpretation that a permit is not required for these demolition pits as long as the following are met:

1. The landfill must comply with the requirements of WAC 173-304-461.

2. Demolition waste from commercial sources shall not be accepted.

3. Demolition waste generated off the Hanford Reservation shall not be accepted.

Sincerely,

Donald W. Abbott
Hydrogeologist
Waste Management Section

DWA:vh

cc: Al Hanson

9 3 1 2 8 5 4 2 0 1 0

Date Received: 11/12/92	INFORMATION RELEASE REQUEST	Reference: WHC-CM-3-4

Complete for all Types of Release

Purpose

- [] Speech or Presentation
  - [] Full Paper
  - [] Summary
  - [] Abstract
  - [] Visual Aid
  - (Check only one suffix)
- [] Speakers Bureau
- [] Poster Session
- [] Videotape
- [] Reference
- [X] Technical Report
- [] Thesis or Dissertation
- [] Manual
- [] Brochure/Flier
- [] Software/Database
- [] Controlled Document
- [] Other

ID Number (include revision, volume, etc.) WHC-EP-0472-1

List attachments.

Date Release Required: November 19, 1992

Title: Facility Effluent Monitoring Plan for the 284E and 284W Power Plants

Unclassified Category: UC-721

Impact Level: 3

New or novel (patentable) subject matter? [X] No [] Yes
If "Yes", has disclosure been submitted by WHC or other company?
[] No [] Yes Disclosure No(s).

Information received from others in confidence, such as proprietary data, trade secrets, and/or inventions?
[X] No [] Yes (Identify)

Copyrights? [X] No [] Yes
If "Yes", has written permission been granted?
[] No [] Yes (Attach Permission)

Trademarks?
[X] No [] Yes (Identify)

Complete for Speech or Presentation

Title of Conference or Meeting: N/A

Group or Society Sponsoring:

Date(s) of Conference or Meeting:

City/State:

Will proceedings be published? [] Yes [] No
Will material be handed out? [] Yes [] No

Title of Journal:

CHECKLIST FOR SIGNATORIES

Review Required per WHC-CM-3-4	Yes	No	Reviewer - Signature Indicates Approval: Name (printed)	Signature	Date
Classification/Unclassified Controlled Nuclear Information	[]	[X]	J.M. Nickels	J.M. Nickels	11/12/92
Patent - General Counsel	[X]	[]	B.D. Williamson	B.D. Williamson	11/13/92
Legal - General Counsel	[X]	[]	B.D. Williamson	B.D. Williamson	11/13/92
Applied Technology/Export Controlled Information or International Program	[]	[X]	J.M. Nickels	J.M. Nickels	11/12/92
WHC Program/Project	[]	[X]	J.M. Nickels	J.M. Nickels	11/12/92
Communications	[]	[X]	J.M. Nickels	J.M. Nickels	11/12/92
RL Program/Project	[X]	[]	E.B. Dagan	E.B. Dagan	11/30/92
Publication Services	[X]	[]	M.P. Curry	M.P. Curry	11/30/92
Other Program/Project	[]	[X]	J.M. Nickels	J.M. Nickels	11/12/92

Information conforms to all applicable requirements. The above information is certified to be correct.

	Yes	No
References Available to Intended Audience	[X]	[]
Transmit to DOE-HQ/Office of Scientific and Technical Information	X []	[]

Author/Requestor (Printed/Signature): J.M. Nickels J.M. Nickels Date: 11/12/92

Intended Audience: [] Internal [] Sponsor [X] External

Responsible Manager (Printed/Signature): L.P. Diediker Date:

INFORMATION RELEASE ADMINISTRATION APPROVAL STAMP

Stamp is required before release. Release is contingent upon resolution of mandatory comments.

APPROVED FOR RELEASE — OFFICIAL DOCUMENT — CW — 11-30-92

Date Cancelled:

Date Disapproved:

THIS PAGE INTENTIONALLY
LEFT BLANK

DISTRIBUTION

Number of Copies		
OFFSITE		
3	Westinghouse Idaho Nuclear Company PO Box 4000 Idaho Falls, Idaho 83403	
	K. Kouri	32-02
ONSITE		
6	U.S. Department of Energy Field Office, Richland	
	G. M. Bell	A5-52
	R. F. Brich	A5-55
	S. S. Clark	A6-55
	E. B. Dagan	A5-19
	S. D. Stites	A5-19
	Public Reading Room	A1-65
1	Hanford Environmental Health Foundation	
	J. J. Maher	B2-75
2	Kaiser Engineers Hanford	
	B. J. Dixon	E3-33
	D. R. Pratt	E3-33
8	Pacific Northwest Laboratory	
	W. J. Bjorklund	P7-68
	T. D. Chikalla	P7-75
	G. R. Hoenes	P7-78
	R. E. Jaquish	K1-30
	D. L. Klages	P7-68
	A. K. Stalker	P7-60
	R. K. Woodruff	K6-13
	Technical Files	K1-11
23	Westinghouse Hanford Company	
	R. J. Bliss	B3-04
	G. D. Carpenter	B2-16
	L. P. Diediker (2)	T1-30
	J. J. Dorian	B2-16
	B. G. Erlandson	B2-19

9 3 1 2 8 6 4 2 0 1 2

DISTRIBUTION (continued)

Number of Copies

ONSITE

Westinghouse Hanford Company (continued)

D. G. Farwick	H4-16
K. A. Gano	X0-21
E. M. Greager	L6-60
A. Greenberg	S4-01
K. A. Hadley	N1-35
D. R. Herman	S4-01
R. J. Landon	B2-19
J. M. Nickels (2)	B2-19
L. W. Vance	H4-16
G. E. Vansickle	R2-81
Document Processing and Distribution (2)	L8-15
Central Files	L8-04
Information Release Administration (3)	R1-08

9 3 1 2 8 5 4 2 0 1 3