START

89

0038383

ENGINEERING CHANGE NOTICE

Page 1 of 3

1. ECN 163466

Proj. ECN

2. ECN Category (mark one)	3. Originator's Name, Organization, MSIN, and Telephone No.		4. Date
Supplemental [ ] Direct Revision [X] Change ECN [ ] Temporary [ ] Standby [ ] Supersedure [ ] Cancel/Void [ ]	MOBERG, TP, 8E130/CEL, S4-25, 3-5234		June 29, 1994
	5. Project Title/No./Work Order No. LERF: Filtration Testing/ A2C68	6. Bldg./Sys./Fac. No. 242-A/LERF	7. ~~Impact Level~~ Approval Designator A N/A
	8. Document Numbers Changed by this ECN (includes sheet no. and rev.) WHC-SD-C018H-TP-010	9. Related ECN No(s). N/A	10. Related PO No. N/A

11a. Modification Work	11b. Work Package No.	11c. Modification Work Complete	11d. Restored to Original Condition (Temp. or Standby ECN only)
[ ] Yes (fill out Blk. 11b) [X] No (NA Blks. 11b, 11c, 11d)	N/A	N/A Cog. Engineer Signature & Date	N/A Cog. Engineer Signature & Date

12. Description of Change

~~See attached pages for a description of changes.~~

Reissue as Rev 1 in its entirety 8/26/94

OCT 1994 RECEIVED EDMC

13a. Justification (mark one)							
	Criteria Change	[X]	Design Improvement	[ ]	Environmental	[ ]	
As-Found	[ ]	Facilitate Const.	[ ]	Const. Error/Omission	[ ]	Design Error/Omission	[ ]

13b. Justification Details

Document revisions were done to reflect the current pH adjustment/backwash filtration system configurations, proper backwashable filter element, and the correct biological sample bottle size. This work is being done as part of the C-018H Pilot Plant Treatability Testing Program which supports the C-018H Effluent Treatment Facility.

14. Distribution (include name, MSIN, and no. of copies)

TP Moberg	S4-25	2	JE Geary	S5-14	1
MJ Schliebe	S4-25	1	LJ Conners	S5-02	1
MJ Warn	H4-16	1	DL Flyckt	R3-45	1
PJ Martell	T1-30	1			
SU Zaman	R3-08	1			
CV King	S4-25	1			
TM Galiotto	R1-43	1			

RELEASE STAMP

OFFICIAL RELEASE BY WHC

DATE AUG 26 1994

STA 4

START

RELEASE AUTHORIZATION

Document Number:	WHC-SD-C018H-TP-010
Document Title:	C-108 LERF Filtration Test Plan
Release Date:	08-26-94

* * * * * * * * * * * * * *

This document was reviewed following the procedures described in WHC-CM-3-4 and is:

APPROVED FOR PUBLIC RELEASE

* * * * * * * * * * * * * *

OCT 1994
RECEIVED
EDMC

Tamara Kohn for Chris Willingham

C. Willingham
(Signature)

08-26-94
(Date)

A-6001-400 (07/94) WEF256

ENGINEERING CHANGE NOTICE	Page 2 of 3	1. ECN (use no. from pg. 1) 163466

15. Design Verification Required	16. Cost Impact				17. Schedule Impact (days)	
	ENGINEERING		CONSTRUCTION			
[] Yes	Additional	[] $	Additional	[] $	Improvement	[]
[X] No	Savings	[] $N/A	Savings	[] $N/A	Delay	[] N/A

18. Change Impact Review: Indicate the related documents (other than the engineering documents identified on Side 1) that will be affected by the change described in Block 12. Enter the affected document number in Block 19.

SDD/DD	[]	Seismic/Stress Analysis	[]	Tank Calibration Manual	[]
Functional Design Criteria	[]	Stress/Design Report	[]	Health Physics Procedure	[]
Operating Specification	[]	Interface Control Drawing	[]	Spares Multiple Unit Listing	[]
Criticality Specification	[]	Calibration Procedure	[]	Test Procedures/Specification	[]
Conceptual Design Report	[]	Installation Procedure	[]	Component Index	[]
Equipment Spec.	[]	Maintenance Procedure	[]	ASME Coded Item	[]
Const. Spec.	[]	Engineering Procedure	[]	Human Factor Consideration	[]
Procurement Spec.	[]	Operating Instruction	[]	Computer Software	[]
Vendor Information	[]	Operating Procedure	[]	Electric Circuit Schedule	[]
OM Manual	[]	Operational Safety Requirement	[]	ICRS Procedure	[]
FSAR/SAR	[]	IEFD Drawing	[]	Process Control Manual/Plan	[]
Safety Equipment List	[]	Cell Arrangement Drawing	[]	Process Flow Chart	[]
Radiation Work Permit	[]	Essential Material Specification	[]	Purchase Requisition	[]
Environmental Impact Statement	[]	Fac. Proc. Samp. Schedule	[]		[]
Environmental Report	[]	Inspection Plan	[]		[]
Environmental Permit	[]	Inventory Adjustment Request	[]		[]

19. Other Affected Documents: (NOTE: Documents listed below will not be revised by this ECN.) Signatures below indicate that the signing organization has been notified of other affected documents listed below.

Document Number/Revision	Document Number/Revision	Document Number Revision

20. Approvals

Signature		Date	Signature	Date
OPERATIONS AND ENGINEERING			ARCHITECT-ENGINEER	
Cog Engineer TP Moberg	TP Moberg	6-29-94	PE	
Cog. Mgr. MJ Schliebe	MJ Schliebe	6/29/94	QA	
QA			Safety	
Safety			Design	
Security			Environ.	
Environ.			Other	
Projects/Programs				
Tank Waste Remediation System				
Facilities Operations			DEPARTMENT OF ENERGY	
Restoration & Remediation			Signature or Letter No.	
Operations & Support Services				
IRM			ADDITIONAL	
Other LL Lin	[illegible]	7/7/94		
Other				

12. Description of Changes incorporated into Rev 1 in its entirety. 8/24/94

Items	Page	Description
1.	4-4	An update of "Figure 4-2. pH Adjustment Unit Flow Diagram" is given.
2.	4-5	An update of "Figure 4-3. Backwashable Filtration Unit Flow Diagram" is given.
3.	4-~~8~~6	A change was made to reflect the current name, diameter, and pore size rating. The 8 µm absolute pore size rating is equivalent to a 2 µm nominal pore size rating with a 99 weight percent removal. The number of filter elements were increased to correctly model the 1 gpm/ft^2 flux ratio choosen by Japan Gas Company for use in the Effluent Treatment Facility.
4.	7-~~8~~7	The container for the biological growth was decreased from 1 l to 0.5 l in volume for waste minimization.
5.	B-3	The change was made to reflect the current name and pore size rating. See item number 3 for further description.

12. Description of Changes incorporated into Rev 1 in its entirety. 3/24/94

Items	Page	Description
1.	4-4	An update of "Figure 4-2. pH Adjustment Unit Flow Diagram" is given.
2.	4-5	An update of "Figure 4-3. Backwashable Filtration Unit Flow Diagram" is given.
3.	4-~~86~~	A change was made to reflect the current name, diameter, and pore size rating. The 8 μm absolute pore size rating is equivalent to a 2 μm nominal pore size rating with a 99 weight percent removal. The number of filter elements were increased to correctly model the 1 gpm/ft^2 flux ratio choosen by Japan Gas Company for use in the Effluent Treatment Facility.
4.	7-~~87~~	The container for the biological growth was decreased from 1 l to 0.5 l in volume for waste minimization.
5.	B-3	The change was made to reflect the current name and pore size rating. See item number 3 for further description.

SUPPORTING DOCUMENT

1. Total Pages 84

2. Title	3. Number	4. Rev No.
C-018 LERF Filtration Test Plan	WHC-SD-C018H-TP-010	1

5. Key Words

Filtration, membranes, pH, backwash, LERF, C-018, biological

APPROVED FOR PUBLIC RELEASE

CW 8/26/94

6. Author

Name: T. P. Moberg

Signature: 6-30-94

Organization/Charge Code 12130/A2CCB

7. Abstract

The following outlines the plan to test the polymeric backwash filtration system at the LERF. These tests will determine if the ETF filter design is adequate. If the tests show that the design is adequate, the task will be complete. If the tests show that the technology is inadequate, it may be necessary to perform further tests to qualify other candidate filtration technologies (e.g., polymeric tubular ultrafiltration, centrifugal ultrafiltration).

The criteria to determine the success or failure of the backwash filter will be based on the system's ability to remove the bacteria and inorganic contaminants from the evaporator process condensate. The tests are designed to qualify the design basis of the filtration technology that will be used in the ETF.

8. PURPOSE AND USE OF DOCUMENT - This document was prepared for use within the U.S. Department of Energy and its contractors. It is to be used only to perform, direct, or integrate work under U.S. Department of Energy contracts. This document is not approved for public release until reviewed.

PATENT STATUS - This document copy, since it is transmitted in advance of patent clearance, is made available in confidence solely for use in performance of work under contracts with the U.S. Department of Energy. This document is not to be published nor its contents otherwise disseminated or used for purposes other than specified above before patent approval for such release or use has been secured, upon request, from the Patent Counsel, U.S. Department of Energy Field Office, Richland, WA.

DISCLAIMER - This report was prepared as an account of work sponsored by an agency of the United States Government. Neither the United States Government nor any agency thereof, nor any of their employees, nor any of their contractors, subcontractors or their employees, makes any warranty, express or implied, or assumes any legal liability or responsibility for the accuracy, completeness, or any third party's use or the results of such use of any information, apparatus, product, or process disclosed, or represents that its use would not infringe privately owned rights. Reference herein to any specific commercial product, process, or service by trade name, trademark, manufacturer, or otherwise, does not necessarily constitute or imply its endorsement, recommendation, or favoring by the United States Government or any agency thereof or its contractors or subcontractors. The views and opinions of authors expressed herein do not necessarily state or reflect those of the United States Government or any agency thereof.

10. RELEASE STAMP

OFFICIAL RELEASE BY WHC

DATE AUG 26 1994

Sta 4

9. Impact Level ~~4~~ N/A

SCC 8/26/94

RECORD OF REVISION	(1) Document Number WHC-SD-C018H TP-010	Page 1

(2) Title
C-018H Liquid Effluent Retention Facility Filtration Test Plan

CHANGE CONTROL RECORD

(3) Revision	(4) Description of Change - Replace, Add, and Delete Pages	Authorized for Release (5) Cog. Engr.	(6) Cog. Mgr. Date
1 RS	(7) Reissue as Rev 1 in its entirety. Rev 1 consists of page changes 4-4, 4-5, 4-6, 7-7, and B-3. ECN-163466	for T.P. Moberg	for M.J. Schliebe 8/24/94
0	EDT-161772 12/15/93		
—			

A-7320-005 (08/91) WEF168

C-018H LIQUID EFFLUENT RETENTION FACILITY FILTRATION TEST PLAN

T. P. Moberg
C. V. King
Chemical Engineering Laboratory

Prepared for the United States Department of Energy

Westinghouse Hanford Company
P. O. Box 1970
Richland, Washington 99352

This page intentionally left blank.

CONTENTS

1.0 INTRODUCTION 1-1

2.0 OBJECTIVE 2-1

3.0 SCOPE 3-1

4.0 DESCRIPTION OF TEST 4-1
- 4.1 TEST ITEMS 4-1
- 4.2 TEST ENVIRONMENT 4-1
- 4.3 EQUIPMENT AND FACILITIES 4-1
  - 4.3.1 LERF Setup 4-1
  - 4.3.2 pH Adjustment Unit 4-3
  - 4.3.3 Polymeric Backwash filter 4-3
- 4.4 DATA 4-6
- 4.5 CRITERIA/CONSTRAINTS 4-7

5.0 EXPECTED RESULTS 5-1

6.0 TEST PROCEDURE 6-1
- 6.1 pH ADJUSTMENT UNIT 6-1
- 6.2 POLYMERIC BACKWASH FILTER 6-2
- 6.3 SAMPLING PROCEDURE AND DATA COLLECTION 6-2

7.0 SAMPLE AND ANALYSIS PLAN 7-1
- 7.1 DATA QUALITY OBJECTIVES 7-1
- 7.2 APPROACH 7-1
- 7.3 QUALITY ASSURANCE OBJECTIVES 7-1
  - 7.3.1 Precision 7-1
  - 7.3.2 Accuracy 7-1
  - 7.3.3 Representativeness 7-2
- 7.4 SAMPLING LOCATION AND FREQUENCY 7-2
  - 7.4.1 Sampling Locations 7-2
  - 7.4.2 Sampling Frequency 7-2
- 7.5 SAMPLE IDENTIFICATION 7-4
- 7.6 SAMPLE EQUIPMENT AND PROCEDURES 7-5
- 7.7 SAMPLE HANDLING AND ANALYSIS 7-6
- 7.8 INTERNAL QUALITY CONTROL SAMPLES 7-7
- 7.9 SAMPLING EVENT DOCUMENTATION 7-7
  - 7.9.1 Reduction 7-8
  - 7.9.2 Reporting 7-8

8.0 SAFETY & ENVIRONMENTAL 8-1

9.0 QUALITY ASSURANCE 9-1
- 9.1 INSTRUMENT/MEASURING EQUIPMENT CALIBRATION 9-1
- 9.2 OPERATING INSTRUMENT DATA 9-2

10.0 ORGANIZATION AND FUNCTION RESPONSIBILITIES 10-1

11.0 SCHEDULE 11-1

12.0 REPORT 12-1

13.0 DATA SHEETS 13-1

14.0 REFERENCES 14-1

APPENDIX A A-1

B POLYMERIC BACKWASH FILTER SPECIFICATIONS B-1

C QUALITY ASSURANCE PROJECT PLAN QUALITY LEVELS C-1

LIST OF FIGURES

1-1 Proposed Treatment Flowsheet for Project C-018H 1-2
4-1 Liquid Effluent Retention Facility Basin Layout 4-2
4-2 pH Adjustment Unit Flow Diagram 4-4
4-3 Backwashable Filtration Unit Flow Diagram 4-5
7-1 Characterization Sample Points 7-3

LIST OF TABLES

3-1 242-A Evaporator Effluent Characterization Data 3-1
7-1 Sample Location Description 7-4
7-2 Sample Collection Frequency 7-4
7-3 Analyte List 7-6
7-4 Sample Containers 7-7
9-1 Ljquid Effluent Retention Facility Filtration Instrument Calibrations 9-2
9-2 Quality Level Requirements for pH Adjustment Unit Operating Instrument Data 9-3
9-3 Quality Level Requirements for Filtration Units Operating Instrument Data 9-3
10-1 Organization Responsibilities 10-1

This page intentionally left blank.

GLOSSARY

ABBREVIATIONS, ACRONYMS, AND INITIALISMS

CEL	Chemical Engineering Laboratory
DOE	U.S. Department of Energy
ETF	Effluent Treatment Facility
HASM	Hanford Analytical Services Management
HEIS	Hanford Environmental Information System
LERF	Liquid Effluent Retention Facility
NPT	Normal pipe thread
NTU	Nephelometric turbidity unit
PC	Process condensate
QA	Quality Assurance
QC	Quality Control
QAPP	Quality Assurance Project Plan
RO	Reverse osmosis
RP	Run plan
SAP	Sample and Analysis Plan
SRS	Savannah River Site
SST	Stainless steel
S&ML	Sampling & Mobile Laboratories
TSS	Total suspended solids
WAC	*Washington Administrative Code*
WHC	Westinghouse Hanford Company

METRIC CONVERSION CHART

INTO METRIC		
If you know:	Multiply by:	To get:
Length		
inches	2.54	centimeters
feet	30.48	centimeters
Mass		
pound	0.45	kilogram
Power		
Btu per second	1.054	kilowatt
Pressure		
pounds per square inch	6895	Pascal (Pa)
Temperature		
Fahrenheit	Subtract 32 then multiply by (5/9)	Celsius
Volume		
gallons	3.785	liters

OUT OF METRIC		
Length		
centimeters	0.3937	inches
meters	3.28	feet
Mass		
kilogram	2.2	pound
Power		
kilowatt	0.949	Btu per second
Pressure		
Pascal (Pa)	1.45×10^{-4}	pounds per square inch
Temperature		
Celsius	Multiply by (9/5) then add 32	Fahrenheit
Volume		
liters	0.264	gallons

C-018H LIQUID EFFLUENT RETENTION FACILITY FILTRATION TEST PLAN

1.0 INTRODUCTION

Past operation of chemical processing facilities at the Hanford Site allowed large quantities of water that contained low levels of radionuclides to be discharged to shallow sediments below the ground surface. The favorable adsorption and filtration characteristics of these sandy sediments permitted most of the radionuclides to be retained in a sediment column above the water table. In 1988, the U.S. Department of Energy (DOE) implemented a policy that now requires wastewater treatment to minimize of radioactive and hazardous waste discharge (DOE 1988). Several projects have been initiated to provide facilities for treatment of major wastewater streams to remove radioactive and hazardous components from the wastewater.

The Effluent Treatment Facility (ETF) will provide for the treatment and disposal of the 242-A Evaporator process condensate (PC). The functional design criteria for this project are presented in WHC-SD-C018-FDC-001 (Flyckt 1990). The feed to the ETF will come from the 242-A Evaporator PC. The 242-A Evaporator will start before operation of the ETF, with the PC being stored in the Liquid Effluent Retention Facility (LERF) until the ETF becomes operational. As the ETF becomes operational, the 242-A Evaporator PC will cease being stored in the LERF and will then be processed directly in the ETF along with the PC stored backlog from the LERF.

The PC is a low-level waste as defined in DOE Order 5820.2A (DOE 1988). In addition to radionuclides, inorganic components (e.g., ammonia, potassium, silica, carbonate, chloride, and nitrate) have been observed in the PC. Small amounts of organic compounds (e.g., butyl alcohol, acetone, dodecane, tetradecane, tridecane and tributyl phosphate) are also expected to be found in the PC.

The overall proposed treatment and disposal system is depicted in Figure 1-1. After treatment in the ETF process, the effluent will be sent to holding tanks for sampling and analytical verification. If the effluent meets permit conditions, then it will be discharged to a State-approved land disposal system.

Suspended solids will be removed by filtration. The preferred organic destruction step is a light-mediated ultraviolet oxidation process. The system will use hydrogen peroxide as the oxidant to promote the destruction of the organic impurities. Activated carbon may be considered if verification tests show additional organic treatment is required. Dissolved ammonia in the waste will be converted to ammonium sulfate by adding sulfuric acid to achieve a pH of 4 to 6. Most of the dissolved solids will then be removed using a reverse osmosis (RO) unit. The rejected stream from the RO unit will be further concentrated, preferably by using a mechanical vapor recompression

Figure 1-1. Proposed Treatment Flowsheet for Project C-018H.

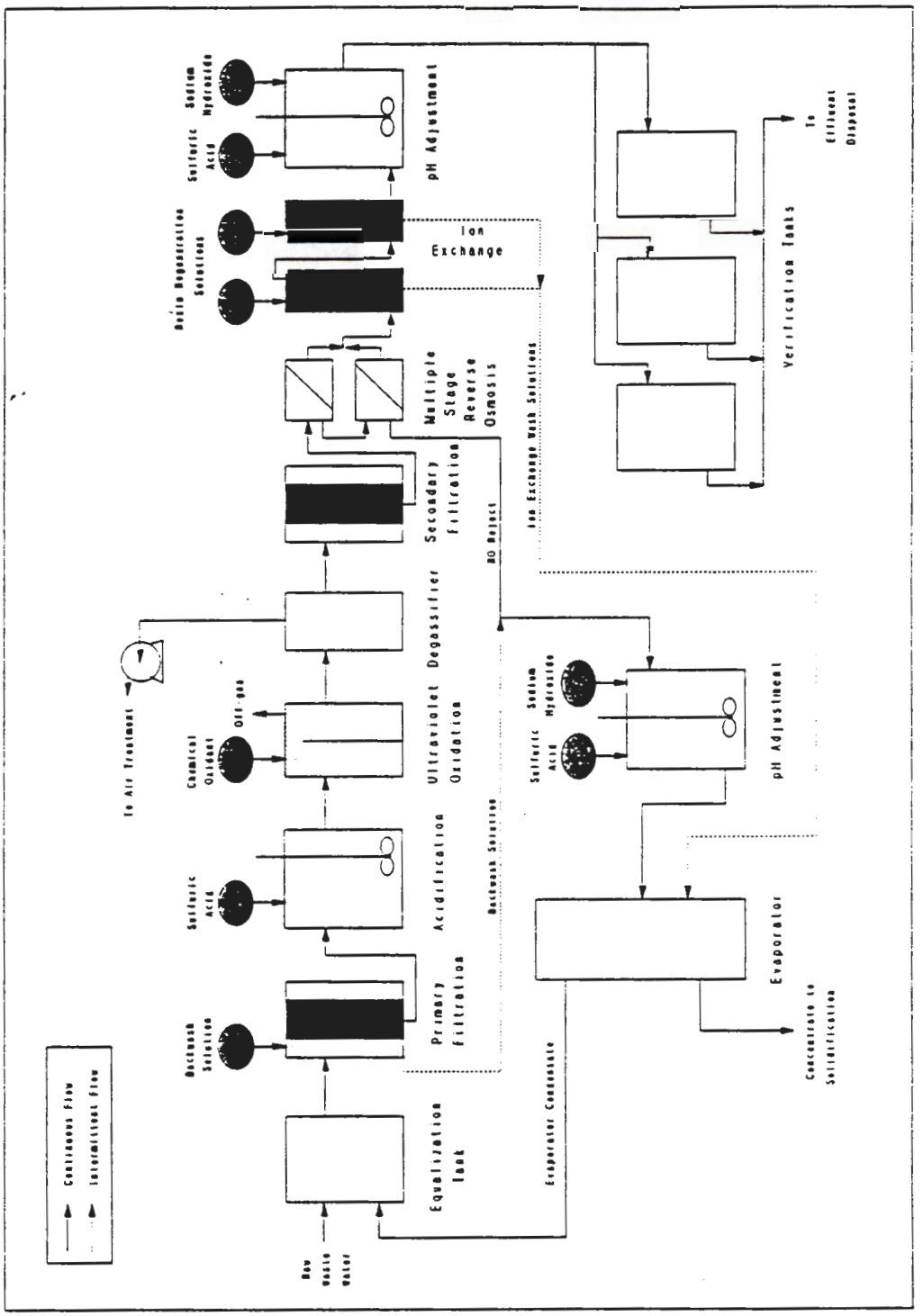

evaporator. The dissolved solids polishing step will consist of an ion exchange/adsorption system that will be designed to ensure that the treatment goals are met for removal of radionuclides and dissolved solids.

It is anticipated that a considerable quantity of bacteria will begin to grow at the LERF (greater than 10^6 bacteria per ml). This bacteria can cause fouling of the filters and RO systems, which would reduce the flow and effectiveness of the treatment plant by as much as 85 percent. Inorganic materials, such as silica, will also cause fouling of the filters and can reduce the flow properties and functionality of the other unit operations in the proposed flow sheet.

In a similar type of treatment process at Savannah River Site (SRS), ceramic ultrafilters were used to pretreat feed water with granulated activated carbon and RO systems. The ceramic filter flowrates were unable to maintain >15 to 80 percent of the designed flowrate because of biological and inorganic colloidal fouling (Appendix A). More than 10 separate filtration technologies for removing bacteria and inorganic foulants where tested by SRS personnel and contracted vendors. Three filter systems were selected as technologies that could most likely remove the biological and inorganic contaminants and maintain the required flowrates with minimum secondary waste; these included polymeric tubular ultrafiltration, polymeric backwash filtration, and centrifugal ultrafiltration. The polymeric backwash filtration system was chosen by Japan Gas Company for use in the ETF and will be tested as part of the C-018H pilot plant waste water treatability testing effort.

If the bacterial and inorganic colloidal suspensions are not removed during filtration, the RO membranes will foul quickly and significantly reduce the membrane flux. Effects of bacteria on the UV oxidation systems are unknown at this time.

This page intentionally left blank.

2.0 OBJECTIVE

The *C-018 Liquid Effluent Retention Facility Filtration Test Plan* will document testing of the polymeric backwash filtration system at the LERF. These tests will determine if the ETF filter design is adequate. If the tests show that the design is adequate, the task will be complete. If the tests show that the technology is inadequate, it may be necessary to perform further tests to qualify other candidate filtration technologies (e.g., polymeric tubular ultrafiltration, centrifugal ultrafiltration).

The criteria to determine the success or failure of the backwash filter will be based on the system's ability to remove the bacteria and inorganic contaminants from the evaporator PC. The tests are designed to qualify the design basis of the filtration technology that will be used in the ETF.

This page intentionally left blank.

3.0 SCOPE

Table 3-1 contains a list of the anticipated ingredients of the LERF PC (Flyckt 1990). The PC has been defined as a low-level waste (DOE 1988). According to characterization data in Table 3-1, tritium is, by far, the most abundant radionuclide in the PC. Besides the radionuclides, inorganic components such as ammonia, potassium, silica, carbonate, chloride, and nitrate have been observed in the PC. Small amounts of organic compounds such as butyl alcohol, acetone, dodecane, tetradecane, tridecane and tributyl phosphate are also present.

A commercially available filter was purchased from a vendor and modified by Westinghouse Hanford Company (WHC) to facilitate the data collection and secondary containment requirements. The purchased filter will be configured as part of a skid-mounted turn-key system. The backwash filter system is being used in existing industrial applications.

Table 3-1. 242-A Evaporator Effluent Characterization Data. (3 sheets)

Parameter	Units[a]	Average[b]	90% CI	Maximum
Conductivity	µS	304		590
pH	SU	10.0		11.3
Total dissolved solids	ppb			2,700
Aluminum	ppb	1,295	1,330	4,992
Ammonium	ppb	482,511	511,344	9,350,000
Barium	ppb	6.8	7.2	8
Boron	ppb	65	97	151
Cadmium	ppb	5		
Calcium	ppb	2,600	2,800	8,300
Carbonate	ppb	98,000	104,347	750,000
Chloride	ppb	1,000	1,200	2,300
Chromium	ppb	52	66	156
Copper	ppb	60	67	127
Fluoride	ppb	874	971	12,273
Iron	ppb	112	131	503
Magnesium	ppb	122	153	3,670
Manganese	ppb	5		
Mercury	ppb	0.3	0.31	0.69
Phosphorus	ppb	1,177	1,336	6,195
Nickel	ppb	14	15	17
Nitrate	ppb	2,800	2,292	5,000
Potassium	ppb	5,944	6,495	19,238

Table 3-1. 242-A Evaporator Effluent Characterization Data. (3 sheets)

Parameter	Units[a]	Average[b]	90% CI	Maximum
Silicon	ppb	15,616	24,252	985,819
Sodium	ppb	3,586	4,469	51,497
Sulfate	ppb	2,600	2,800	13,000
Sulfide	ppb	36,000	66,000	66,000
Vanadium	ppb	6.3	6.7	7
Total organic carbon	ppb	42,024	218,415	4,920,000
Acetone	ppb	980	1,000	5,100
Benzyl alcohol	ppb	13	14	18
Benzaldehyde	ppb	23		
2-Butoxyethanol	ppb	380	400	920
I-Butanol	ppb	9,800	11,000	88,000
2-Butanone	ppb	51	53	120
Butoxyglycol	ppb	280	290	810
Butoxydiglycol	ppb	19	44	27
Butoxytriethyleneglycol	ppb	35		
Butraldehyde	ppb	56	62	230
Chloroform	ppb	14	14	27
Caproic acid	ppb	70		
3,5-Dimethylpyridine	ppb	21	23	24
Dimethylnitrosamine	ppb	57		
Dodecane	ppb	43	52	46
Ethoxytriethyleneglycol	ppb	99	120	150
Ethyl alcohol	ppb	2		
Hexadecane	ppb	17		
Heptadecane	ppb	18		
Methoxydiglycol	ppb	40	52	52
Methoxytriglycol	ppb	220	370	370
Methylene chloride[c]	ppb	120	140	180
Methyl n-propyl ketone	ppb	9.3	9.7	12
Methyl n-butyl ketone	ppb	13	14	79
MIBK (Hexone)	ppb	11	14	68
2-Methylnonane	ppb	16	17	17
Pentadecane	ppb	20		
Phenol	ppb	33		

Table 3-1. 242-A Evaporator Effluent Characterization Data.
(3 sheets)

Parameter	Units[a]	Average[b]	90% CI	Maximum
2-Propanol	ppb	22		
Pyridine	ppb	550		
Tetradecane	ppb	76	83	440
Tetrahydrofuran	ppb	37	39	170
Tributyl phosphate	ppb	3,900	4,100	21,000
1,1,1-Trichloroethane	ppb	5		
Tridecane	ppb	70	77	350
Triglyme	ppb	90		
Alpha	pCi/L	160	350	750
Beta	pCi/L	4,600	6,000	74,000
Strontium-90[d]	pCi/L	5,200	7,600	81,000
Ruthenium-106	pCi/L	10,500	11,080	17,800
Cesium-137[d]	pCi/L	4,400	5,400	26,000
Promethium-147	pCi/L	1,300	1,600	4,100
Uranium (gross)	pCi/L	20	33	140
Tritium	pCi/L	5,600,000	6,300,000	24,000,000
Plutonium-239	pCi/L	0.00037	0.00068	0.0024
Tin-113	pCi/L	540	770	2,500
Europium-155	pCi/L	1,400	na	1,400

[a]Units: µS = microsiemen
SU = standard pH units
ppb = parts per billion
pCi/L = picocunes per liter
[b]Because there was only 1 detection in 34 samples, an average was reported.
[c]Further data investigation found no detection in samples. Samples reporting above detection were blank samples.
[d]Cesium-137 and strontium-90 values have been multiplied by 10 to anticipate removal of the existing 242-A Evaporator ion exchange system.

Legend:

% = percent
CI = confidence interval
NA = not applicable

NOTE: Radionuclide data is presented for information only.

This page intentionally left blank.

4.0 DESCRIPTION OF TEST

4.1 TEST ITEMS

The backwash filter system was selected based on the work done by SRS (Appendix A). The liquid retained in the LERF will be pumped into a pH adjustment system, and then through the filter. Filtrate and concentrate from the filter system will be returned to the LERF.

4.2 TEST ENVIRONMENT

All of the filtration tests will be performed at the LERF using the sample riser in the northeast corner of the 200 East Area for feed to the test system. The test system will be located on the east side of the 242-AL-43 Basin.

4.3 EQUIPMENT AND FACILITIES

4.3.1 LERF Setup

The filter test skid will be located at the LERF, as shown in Figure 4-1. Power will tie-in at the existing power panel at LERF basin 242-AL-43. A submersible well pump will be used to pump the solution from a 6-in. sample port to the test system. The submersible pump will have stainless steel (SST) wetted parts and a 1/2-hp 230-VAC drive motor. In order to prevent pump cavitation and over pressurization, a pressure bypass valve and piping will be installed to return unused flow of filter influent to the LERF. All feed and return lines to the ports will be cross-linked polyethylene chemically resistant hose that is rated for 150 psi. The sample port will provide the secondary containment for the pump.

The submersible pump will have an insertion/retrieval cable attached. This will ensure that the submersible pump can be inserted into and retrieved from the sample riser for each test. The power cables and liquid transfer pipes will be located out of traffic areas to prevent damage to the pipes.

The filter influent will be taken from one sample port, and the effluent and concentrate will be discharged at a separate port. This will ensure that the feed is a reasonable representation of the LERF water and not recycled filtrate. Each unit in the filtration test system will be located over a secondary containment pan. The pan will be connected to the middle sample riser through the use of cross-linked polyethylene chemically resistant hose that is rated for 150 psi. All piping and equipment will be selected to avoid corrosion of the system.

Each tank in the backwash filtration unit will be vented to an inflatable tank. The 250-gal inflatable tank is constructed with a single 2-in. normal pipe thread (NPT) fitting for both fill and discharge. The tank will be vented to the effluent drain line.

Figure 4-1. Liquid Effluent Retention Facility Basin Layout.

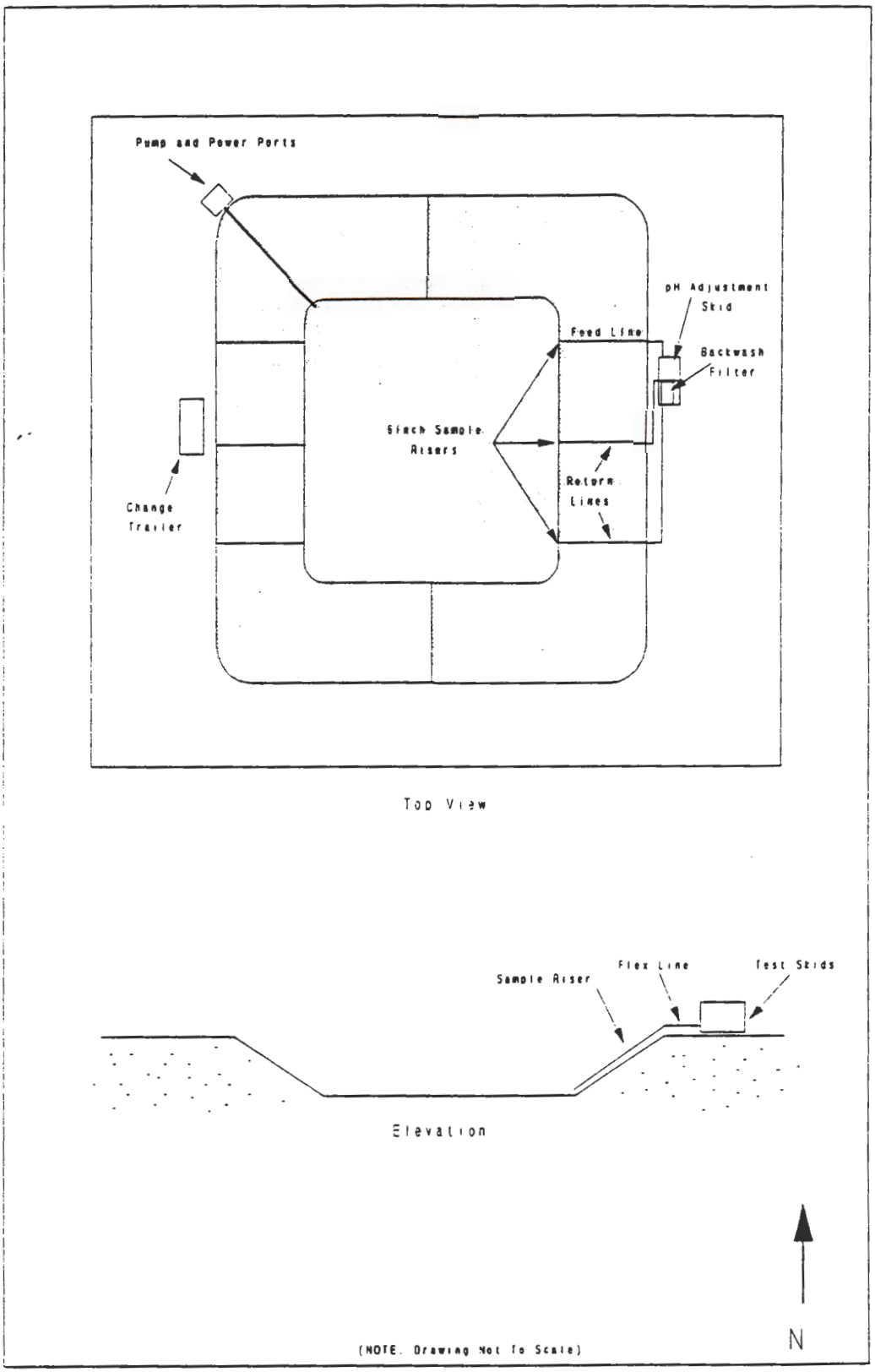

4.3.2 pH Adjustment Unit

The pH adjustment unit will be fed with liquid from the LERF. The primary components in the pH adjustment unit are the adjustment vessel, acid supply vessel, acid metering pump, mixers, pH probes, control instrumentation, and the filter supply pump. The flow diagram for the pH adjustment unit is given in Figure 4-2.

The flow to the pH adjustment tank will be controlled by monitoring the level in the tank using a continuous level indicator. An overflow will be located on the feed side of the tank.

The adjustment vessel is made of 3/16-in. 304-L SST and will be enclosed. A baffle is located in the center of the adjustment vessel so that pH adjustment occurs in two chambers. The first chamber contains a mixer, a pH probe and transmitter, liquid level transmitter, and acid addition pump. The pH probe in the first chamber sends a signal to a controller to regulate the acid addition pump. The second chamber contains a mixer, pH probe and transmitter, and a discharge pump. The pH probe in the second chamber sends a signal to the recorder so that the final pH can be recorded.

The acid metering pump is a Teflon[1] facet diaphragm pump. It is capable of pumping a maximum of 10 gal/hr at 6.31 ml/stroke and 50 psi.

The acid supply vessel is made out of high-density polyethylene and will hold a maximum of 150 gal of 50 percent sulfuric acid. A high-density polyethylene lid will be located on top of the vessel.

The construction materials for the pH probes are glass-filled polyvinylidene fluoride, glass, ceramic, and Viton[1]. The probes will require minimum maintenance because they will be disposible.

The filter supply pump is a SST 1-hp feed pump that is capable of pumping 15 gal/min at a 30-ft discharge head.

The entire pH adjustment system will be located in an enclosure to ensure secondary containment. The secondary containment will meet *Washington Administrative Code* (WAC) 173-303-640 requirements and will be plumbed to drain back to the LERF 242-AL-43 basin (WAC 173-303 1990). The enclosure will be vented to ensure that there is no buildup of sulfuric acid fumes from the acid supply vessel. The unit dimensions will be 8 ft, 5 in. long; 7 ft, 8 in. wide; and 8 ft, 5 in. high. The voltage requirements will be 460 VAC, 18 amp.

4.3.3 Polymeric Backwash filter

The polymeric backwash filter can be backwashed at predetermined intervals that are based on differential pressure across the filter membrane. The flow diagram of the filter skid is given in Figure 4-3. The backwash

---

[1]Teflon and Viton are trademarks of E.I. du Pont de Nemours & Company.

Figure 4-2. pH Adjustment Unit Flow Diagram.

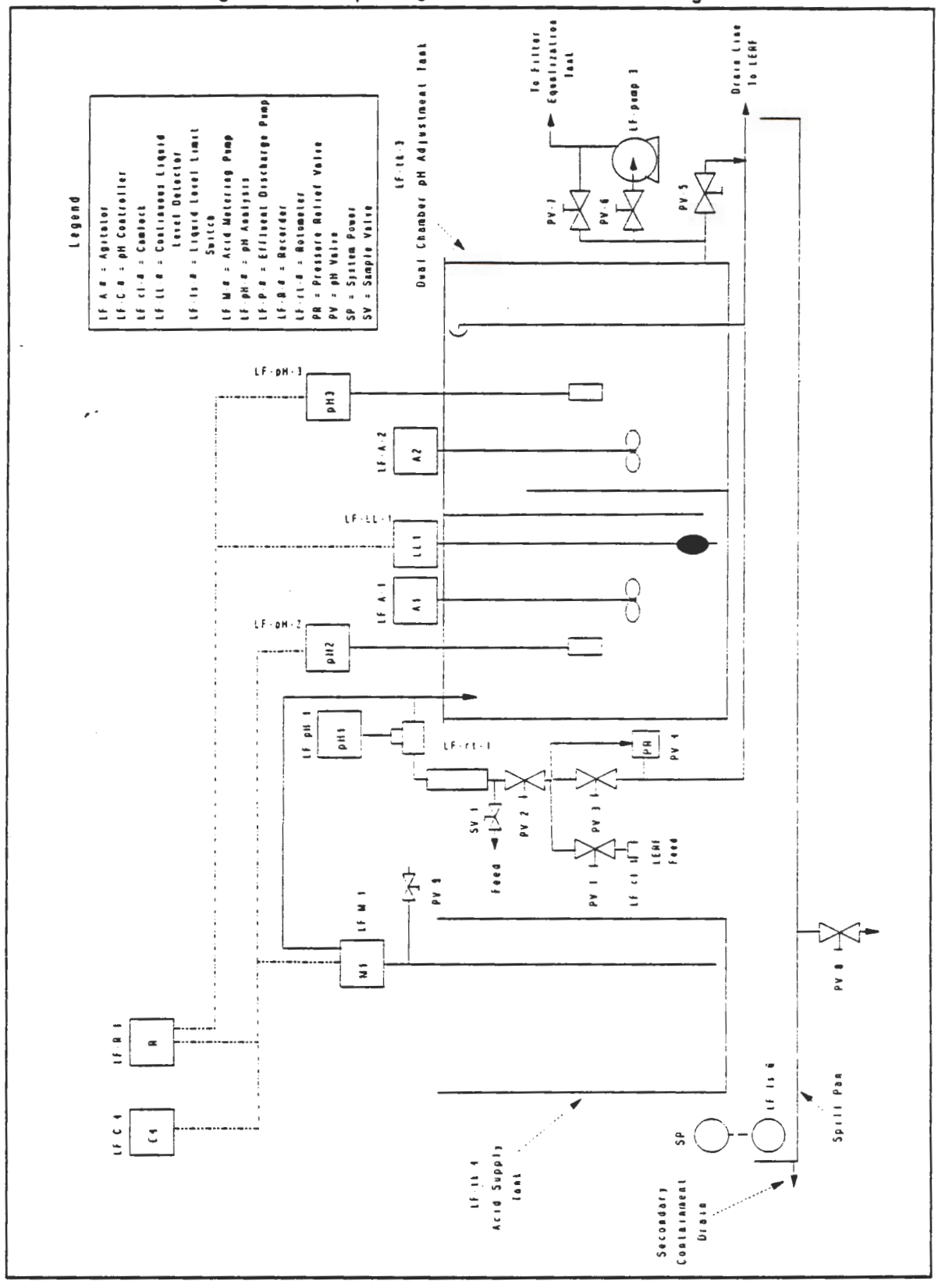

Figure 4-3. Backwashable Filtration Unit Flow Diagram.

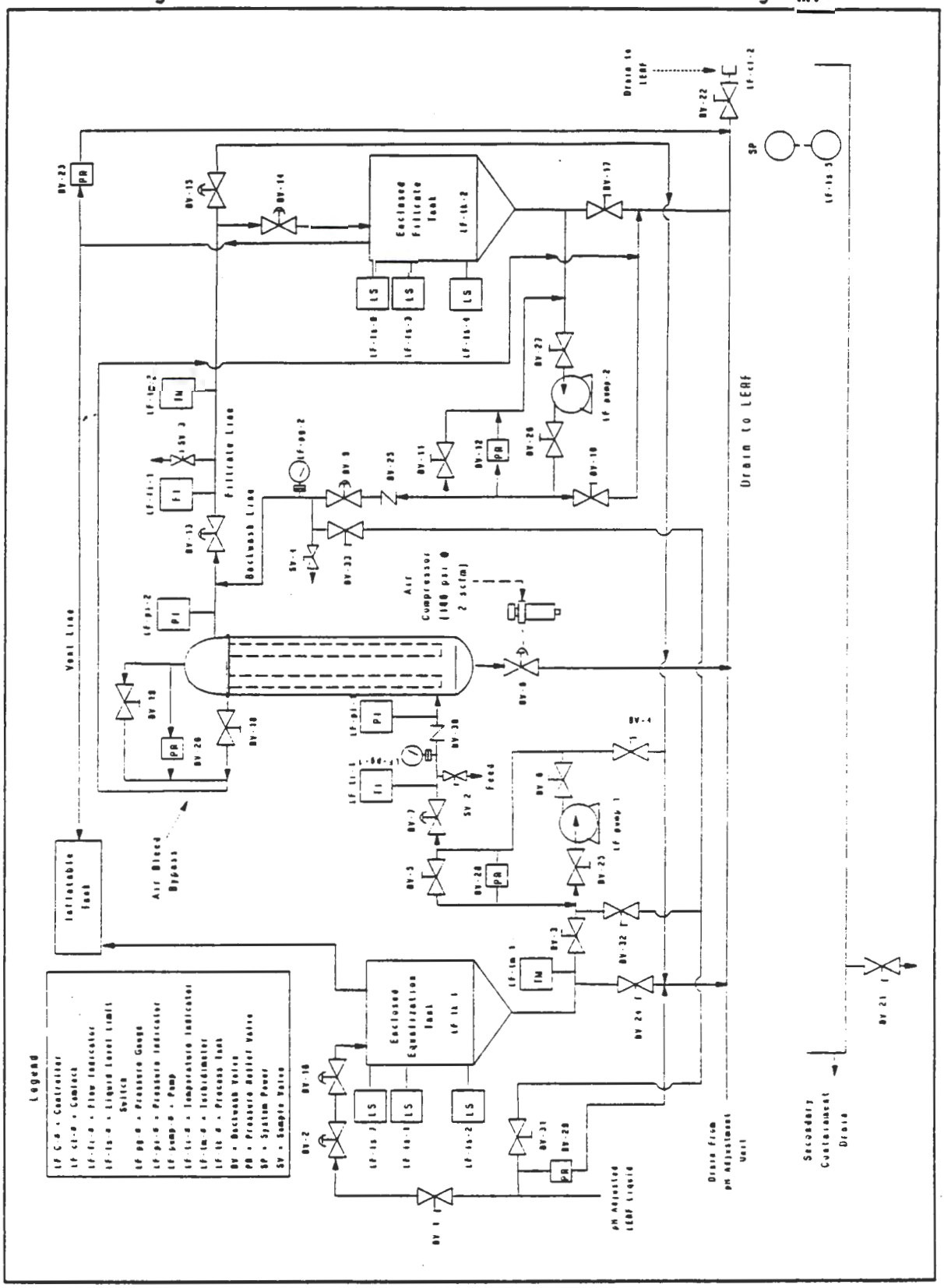

filter housing contains nine Prosep[2] filter elements that are 1.25-in. diameter by 30-in. long. The test system will operate at 5 gpm flowrate using a 1 gpm/ft^2 flux rate to accurately model the system that was chosen by Japan Gas Company for use in the ETF. Each filter is made of polypropylene with a 8-μm absolute pore size rating. The filter will operate at about 14 psig and will be backflushed using filtrate pressurized to 45 psig. The specifications to which the polymeric backwash filter was built are contained in Appendix B.

The feed pump that will pump the liquid from the equalization tank into the filters will be a SST 1-hp filter feed pump with a capability of 5 to 10 gal/min at 30 psi. Filter backwashing will be performed using a 3-hp SST backwash pump that will be capable of 10 gal/min at 100 psi.

The influent temperature, delta pressure across the filter, and flow rate will be monitored electronically on a continuous basis. High- and low-pressure interlock switches will be tied to the circulation pump to avoid running the pump dry. The secondary containment will meet WAC 173-303-640 requirements and will be plumbed to drain to the LERF (WAC 173-303 1990). The unit dimensions will be 13 ft, 8 in. long; 4 ft, 10 in. wide; and 8 ft, 5 in. high. The voltage requirements will be 460 VAC, 30 amp.

4.4 DATA

Measurements for all tests shall be reported, along with estimates of accuracy. Requirements for analytical data on process samples are discussed in Section 7.0. Operating data that shall be monitored and recorded during process runs include:

- Temperature - The filter influent temperature will be monitored continuously over the test period. The temperature measurements will have an accuracy of ±1.5 percent of full scale (0 to 499 °F) with a resolution of 1 °F.

- Total Suspended Solids (TSS) - The TSS of the influent, concentrate, and filtrate will be measured on a daily basis during the test period. TSS will be measured using a well-mixed sample filtered through a weighed glass fiber filter. The filter and residue on the filter is dried to a constant weight at 103 to 105 °C. Increase in weight of the filter represents TSS of the volume of liquid tested (EPA 1983).

- Biological Growth - The bacteria and other biological growth of the influent will be checked weekly during the test period. Biological growth will be quantified based on the primary types of growth present. The Pacific Northwest Laboratory has been contracted to characterize the microorganisms present in the LERF basins, and to determine if the microorganisms are able to grow/survive in PC from the 242-A Evaporator.

---

[2]Prosep is a trademark of Pall Corporation.

- Particle Size Analysis - The particle size of the influent and filtrate solids will be measured daily during the test period. Both number and volume distributions will be conducted with the limitation of measuring particle sizes ≥0.5 μm.

- Turbidity of Filtrate - The turbidity of the influent and filtrate of each filter will be measured continuously during the test period. The turbidity will be specified in nephelometric turbidity units (NTU) on a scale from 0.1 to 200 ± 0.5 percent of full scale with 0.1 NTU resolution.

- Filter Delta Pressure Across the Membrane - The pressure across the membrane will be measured continuously during the test period. The gauges and transducers will have an accuracy of ±1 percent of full scale (the full scale varies with specific application), with a minimum resolution of 1 percent of full scale.

- Flow Rates - Flow rates of the filtrate will be monitored continuously during the test period. The flow rate of the concentrate for the tubular and centrifugal filter will be monitored continuously during the test period. The accuracy of these meters will be ±1 percent of full scale (the full scale will vary with application), with a minimum resolution of 0.1 gal/min.

4.5 CRITERIA/CONSTRAINTS

The critical operating parameters for filtration are pressure and temperature. The filtration equipment will be operated at a maximum 150 psig and will be fully pressure tested before processing waste water. The temperature can affect the performance of the polymeric filter assemblies or membranes. The one polymer identified is polypropylene, which has a maximum operating temperature of approximately 176 °F.

The following safety features are built into the filtration system. Pressure switches are installed to avoid equipment failure and damage at low and high pressure. Pressure relief valves are used as a backup safety feature for the high pressure switch. A thermocouple monitors the system temperature so that the operational temperature of the filter material is not exceeded. High- and low-level switches on all staging tanks alarm to prevent tank overfilling and as a backup to the low pressure switch to prevent running a pump dry.

Each LERF filtration module is provided with a weather-tight enclosure to prevent the accumulation of rainwater in the catch pan and its consequent drainage to the LERF. These enclosures also serve as spray guards for containment of any leak of the module equipment.

The testing system will meet State requirements for secondary containment and corrosion compatibility (WAC 173-303 1990). A licensed professional engineer will certify that the system meets WAC requirements before startup. Permitting and licensing of the filtration operation will be obtained in accordance with State and Federal regulations.

This page intentionally left blank.

5.0 EXPECTED RESULTS

A minimum of 97% influent recovery is expected from the system. The filtrate is expected to have a turbidity of >1 NTU. The total solids in the filtrate are expected to be >100 ppm. Test results will be used to determine how biological and inorganic particulate fouling affects filter operations. It is anticipated that the major fouling constituents will be silicates and bacteria. The backwash filter has shown an ability to separate expected particulates without permanently blinding the filter membrane.

This page intentionally left blank.

6.0 TEST PROCEDURE

The filter test system will be set up to be essentially maintenance free. It will be operated during two separate periods, preferably during seasonal change periods. During the first period, operation will be for 5 days to develop a good baseline. After the initial 5-day operating period, the filter will be shut down for approximately 6 months. Operation will then restart for 5 days to determine the effects of biological fouling. A detailed operating procedure will be prepared and issued for each respective testing skid.

Testing of the LERF filtration unit will be controlled by a run plan (RP). The RP will be written by Chemical Engineering Laboratory (CEL) personnel and approved by the CEL manager with the concurrence of the Effluent Process Engineering manager, LERF cognizant engineer, and Quality Assurance (QA), Safety, Environmental, and Health Physics personnel, before the start of testing. Any deviations to the RP shall be noted in the RP by redlining and shall have concurrence of the above-listed organizations. A punchlist will also be completed before startup to verify that all the research, development, and demonstration permit requirements have been satisfied.

The RP will provide detailed instructions for each test, including operating procedures, fluid routing, sampling procedures, sampling intervals, and data sheets. The RP will provide the necessary flexibility during actual operation of the filtration tests; however, the RP will also ensure a structured framework from which all work will be organized.

6.1 pH ADJUSTMENT UNIT

Before starting the pH adjustment unit, a submersible pump will be inserted into the northern-most sample riser on the east side of LERF basin 242-AL-43. A flexible line from the submersible pump will feed into the pH adjustment unit. The feed will enter a tank that will have two separate compartments separated by a baffle in the middle. A mixer and pH probe will be located in each tank compartment. The pH of the feed liquid from the LERF basin will be monitored before entering the adjustment unit. In the first tank compartment, the pH will be monitored and the signal will be sent to the acid metering pump which will control the flowrate of the acid addition. The liquid level will be monitored using a continuous liquid level detector that will send a signal to the chart recorder.

The second compartment will be the final monitoring point for verification of the final adjusted pH. Effluent from the adjustment tank is then pumped at 5 gal/min total to the backwash filter unit. The pH adjustment tank will be piped so that the effluent can be sent to the drain line going back to the LERF. Daily inspection of the pH adjustment operation will be made during the operation cycle to ensure that no leaks or equipment failures have occurred.

6.2 POLYMERIC BACKWASH FILTER

The filter will draw feed from the pH adjustment unit and return the filtrate and concentrate to the southern-most sample port on the east side of LERF basin 242-AL-43. A level switch will be used to control the system feed in the influent tank. The filter will automatically be backflushed using 45 psig filtrate solution at cycles that are based on differential pressure across the membrane. The backwash will also be returned to the LERF.

During startup, the filter will be monitored continuously and backwash cycles will be adjusted until a relatively steady-state operation can be achieved. Daily inspection of the filter operation will be made and recorded during the operation cycle to ensure that no leaks or equipment failures have occurred.

6.3 SAMPLING PROCEDURE AND DATA COLLECTION

Samples and data will be taken at regular intervals to qualify the design basis for the backwash filtration technology that will be used in the ETF. A list of the samples and data to be taken can be found in Section 4.4 of this test plan. The procedure requirements for sampling and for the QA sample data can be found in Sections 7.0 and 9.0 of this test plan. It should be noted that a detailed sampling procedure will be prepared as the equipment design and operational procedures are made available. The operating and sampling procedures will be completed, reviewed, and approved before operation.

7.0 SAMPLE AND ANALYSIS PLAN

7.1 DATA QUALITY OBJECTIVES

This sample and analysis plan (SAP) will describe how sampling and analyses of the filtered solutions will be performed during testing to accomplish the desired data quality objective. The data quality objective is to collect credible characterization data that are sufficient to evaluate the efficiency of each filtration technology being tested.

7.2 APPROACH

This SAP has been structured to obtain high-quality sampling data that will identify the types and quantities of colloidal contaminants found in the LERF basin that will affect the filtration system. The data will come from the LERF filtration testing grab samples. The procedures shall comply with the guidance provided in the Quality Assurance Project Plan (QAPP) (DOE-RL 1993). Quality-controlled and verifiable methods will be used for the following activities:

- Collecting the wastewater samples
- Establishing chain-of-custody
- Transporting the samples to the analytical laboratory
- Analyzing the samples
- Storing the sample records.

7.3 QUALITY ASSURANCE OBJECTIVES

The QA objectives presented in this section address the test procedures that will be implemented to achieve analytical results of known and acceptable quality

7.3.1 Precision

Precision is a qualitative measure of the reproducibility of measurements under a given set of conditions. Analytical precision can be expressed either as the relative percent difference for duplicate measurements or the relative standard deviation for three or more replicate samples. For inorganic and miscellaneous parameters, the comparison will be between the duplicate sample analyses. The quality objective for the relative percent difference between the compared concentration is ± 30 percent unless stated differently in the laboratory statement-of-work. The precision measurements will be performed at a minimum of 1 in 15 samples or 1 per batch, whichever is more frequent.

7.3.2 Accuracy

Accuracy is a measure of the closeness of the measured value to the true valve. The accuracy of chemical test results is estimated by "spiking" matrix

samples with known standards and establishing the average recovery. Matrix spike measurements for inorganic parameters will be at a minimum frequency of 1 in 15 samples, or 1 per batch, whichever is more frequent. The miscellaneous parameters (e.g., total suspended solids, particle size analysis) will be checked using instrument standards. The target quantity accuracy objective is ± 25 percent.

7.3.3 Representativeness

Representativeness is a measure of how closely the measured results reflect the actual concentration or distribution of the chemical compounds in the water sampled. Representative samples must be drawn at the correct place and time and drawn under predetermined operational conditions. The sample location and frequency is detailed in Section 7.4. The test operating conditions for sampling are spelled out within the discussion on test equipment in Section 4.3. Proposed documentation will establish that procedures have been followed and sample identification and integrity ensured. Field duplicates obtained will be used to assess field and transport contamination and method variation. Laboratory method blanks will be run at the minimum frequency of 5 percent or one-per-batch to assess laboratory contamination.

7.4 SAMPLING LOCATION AND FREQUENCY

7.4.1 Sampling Locations

Samples will be collected from several locations within the LERF Filtration System. The general location of sample points within the test equipment are shown in Figure 7-1 and are described in Table 7-1. The locations of particular interest for the characterization samples are: the initial feed (the influent to the LERF Filtration System), sample point 1; the pH adjusted feed to the backwash filter, sample point 2; and the filtrate from backwash filter, sample point 3. These sample points are shown in more detail on the pH adjustment and backwash filtration flow diagrams in Figures 4-2 and 4-3.

7.4.2 Sampling Frequency

All characterization sampling events will consist of drawing one sample with appropriate duplicates (see Section 7.7). The required analyses for each sampling event are detailed in Table 7-2.

Figure 7-1. Characterization Sample Points.

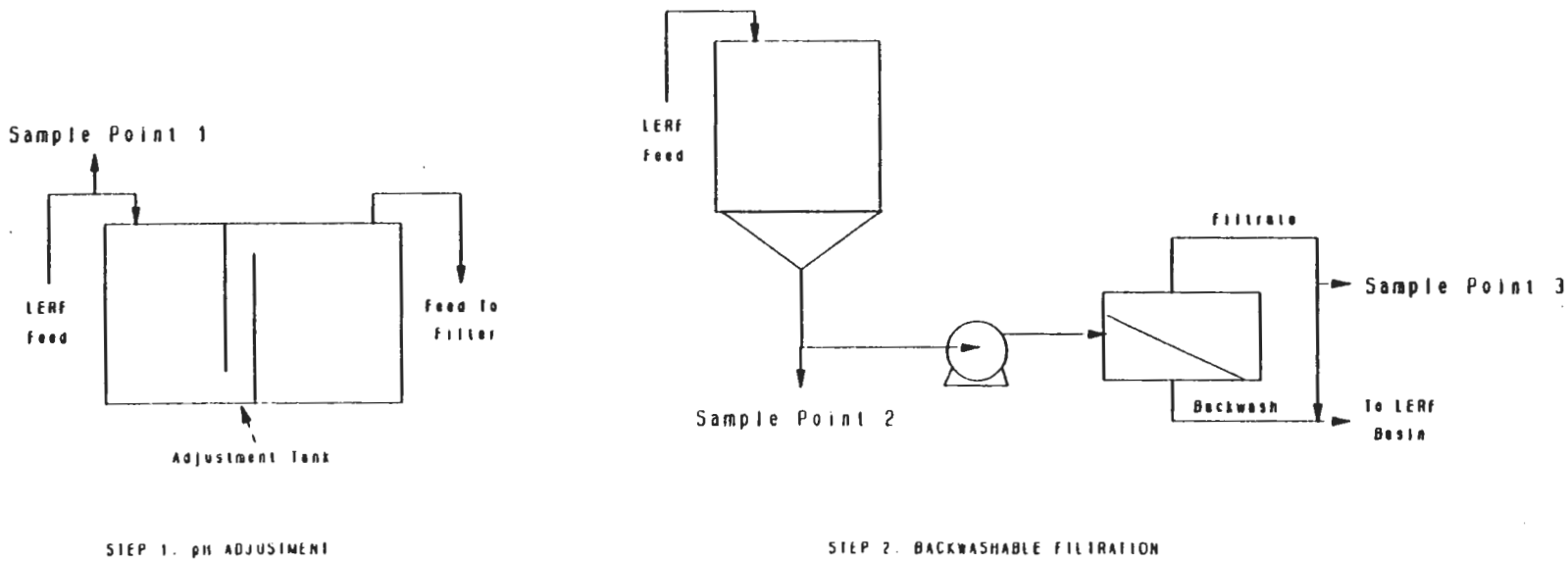

Table 7-1. Sample Location Description.

Sample location	Process stream
1	Initial Liquid Effluent Retention Facility Feed
2	pH-Adjusted Feed
3	Filtrate from Backwash Filter

Table 7-2. Sample Collection Frequency.

Sample point	Process stream	Analysis	Frequency
1	Liquid Effluent Retention Facility	Total suspended solids	Daily
		Biological analysis	Once per test
		Particle size analysis	Daily
		Inductively coupled plasma	Daily
2	Feed to filters	Total suspended solids	Daily
		Biological analysis	Once per test
		Particle size analysis	Daily
3	Backwash filter filtrate	Total suspended solids	Daily
		Biological analysis	Once per test
		Particle size analysis	Daily
		Inductively coupled plasma	Daily

7.5 SAMPLE IDENTIFICATION

Sample labels for pilot-scale characterization samples shall be furnished by the sampling team from the Sampling and Mobile Laboratories (S&ML) using the Hanford Environmental Information System (HEIS). The HEIS is a consolidated set of automated resources that effectively manage the data gathered during the environmental monitoring and restoration of the Hanford Site. Data stored in the HEIS are collected under several regulatory programs. Currently these include the *Comprehensive Environmental Response, Compensation and Liability Act of 1980*; the *Resource Conservation and Recovery Act of 1976*; and *Groundwater Surveillance at the Hanford Site for Calendar Year 1983* (Prater 1984), managed by the Pacific Northwest Laboratory. The HEIS numbers will be assigned to the samples by the S&ML personnel at the time samples are drawn.

The labels will require the following information to be recorded by a member from the sampling team:

- Identification of the person in charge of collecting the sample
- Unique sample identification number
- Date and time the sample was collected
- Place the sample was collected
- Analysis to be performed on the sample
- Type of preservative used.

In addition, each sample bottle shall be identified with a bar code sticker attached to the bottle by the bottle manufacturer. The bar code shall identify the bottle lot number and individual bottle number.

7.6 SAMPLE EQUIPMENT AND PROCEDURES

All sampling will be performed in a manner that provides representative measurements of the volume and concentration of colloidal contaminants in the solutions. All sampling activities will be conducted in accordance with the guidance provided in the Quality Assurance Project Plan (QAPP) (DOE-RL 1993).

The specific sample locations are shown in Figure 4-2 (i.e., pH adjustment) and Figure 4-3 (i.e., backwashable filtration). Samples shall be taken after purging the sample ports, by allowing a minimum of three sample line volume exchanges. In all cases, the distance from the sample valve to the process equipment piping is kept to a minimum. This minimizes the volume required for sample line flushing and provides a better representative sample. The prelabeled sample bottles will be filled directly from the sample port for analysis, according to the requirements in the Sample Analysis Form, provided by Hanford Analytical Services Management (HASM) for the S&ML.

There is no unique or specially designed sampling equipment used during this testing. All that is required is commercially available certified-clean glass or plastic sample bottles.

Preservatives required for these protocol characterization samples will be supplied by S&ML. The container caps will be sealed to the containers with tamper-evident tape.

The characterization samples will originate within a radiologically controlled facility. Before releasing the samples for offsite shipment, a portion of the samples shall be shipped to 222-S Laboratory for radiological screening. The released samples shall be double bagged; the outer bag will be taped with tamper-evident tape.

At the time of sampling, the sampling team will complete field logs in accordance with the *Environmental Investigations and Site Characterization Manual*, Procedure EII 1.5, "Field Logbooks" (WHC-CM-7-7). A field logbook containing information pertinent to the sampling shall be maintained, and the logbook shall be a quality-effecting record.

Sampling event documentation will be validated by S&ML and then transferred to CEL and HASM for inclusion in their files.

7.7 SAMPLE HANDLING AND ANALYSIS

Samples will be taken at locations and frequencies described in Section 7.3. The characterization samples are all QA Level II, as described in the QAPP (DOE-RL 1993). Appendix C describes the "Quality Levels" as defined in the QAPP.

Table 7-3 identifies the specific analytes that will be characterized and the analytical methods to be used.

The handling and preparation of samples will comply with the procedures found in the *Environmental Investigations and Site Characterization Manual*. The chain-of-custody shall comply with the Procedure EII 5.1, "Chain-of-Custody" (WHC-CM-7-7). A chain-of-custody form will be filled out at the time of sampling and will accompany each pilot-scale characterization sample. A sample may consist of several containers. The chain-of-custody will account for each container. The preparation of either a single sample or group of samples for shipment to a laboratory shall comply with Procedure EII 5.11, "Sample Packaging and Shipping."

Once a characterization sample has been drawn, it must be in the physical control or view of the custodian and locked in an area where it cannot be tampered with unless it has been prepared for shipping, in which case it will be packaged with tamper-evident tape applied in accordance with WHC-CM-7-7, Procedure EII 5.11 (WHC-CM-7-7). Samples are described as being in the "physical control" of the custodian when in the sight of the custodian, in a room which will signal an alarm when entered, or when locked in a cabinet (WHC-CM-7-7). When more than one person is involved in sampling, a sampling task leader shall be designated, and shall be the only person that signs as sampler. The sampling task leader will be the custodian, until the samples are transferred to another location or group, and shall sign when releasing the samples to the designated receiver.

The approved laboratory shall designate a sample custodian, and a designated alternate, who will be responsible for receiving all samples. The sample custodian or the alternate sample custodian shall sign and date all appropriate receiving documents at the time of receipt and, at the same time, initiate an internal chain-of-custody form using documented procedures. A continuous chain-of-custody will be maintained from the time of sampling until final disposition of all samples.

Table 7-3. Analyte List.

Analyte	Analytical method
Aluminum	CLP Metals or SW-846 Method 6010
Calcium	CLP Metals or SW-846 Method 6010
Iron	CLP Metals or SW-846 Method 6010
Silicon	CLP Metals or SW-846 Method 6010

All QA and quality control (QC) practices shall be followed in accordance with appropriate analytical methods and with the QAPP. The statement-of-work for completing the analysis shall require the approved laboratories to have existing standard operating procedures, and to submit for approval any proposed changes to procedures during the contract term. The data reduction and reporting requirements of the characterization samples acquired under this SAP are summarized in Section 7.8.

Testing characterization samples will be collected in commercially available, individually certified, precleaned glass or plastic bottles. The certification of the precleaned condition shall accompany the bottle. Recommended container types and preservatives are provided in Table 7-4.

Table 7-4. Sample Containers.

Analyte class	Container[a]	Preservation
Biological growth	2 x 0.5 L glass	None
Particle size analysis	2 x 20 ml glass	None
Total suspended solids	2 x 20 ml glass	None
Metals-total recoverable	2 x 1,000 ml glass or polyethylene	HNO_3 to pH <2 Cool, 4 °C

[a]HASM will provide the S&ML the specific container/sample volume requirements on a Sample Analysis Form before the sampling event.

7.8 INTERNAL QUALITY CONTROL SAMPLES

Analytical samples shall be subject to in-process QC measures in both the field and laboratory. The following field QC requirements apply to characterization sampling. These requirements are in accordance with SW-846, *Test Methods for Evaluating Solid Waste* (EPA 1986). The QC field duplicate samples shall be collected as specified:

- Retrieved from the same sampling location using the same equipment and sampling technique
- Placed into two identically prepared and preserved containers
- Analyzed independently.

7.9 SAMPLING EVENT DOCUMENTATION

Each characterization sampling event requires documentation as established by data management tasks which include reduction, validation, and reporting. The organizations responsible for data management tasks are discussed in Section 10.0.

7.9.1 Reduction

The samples will be taken and shipped to the analytical laboratory by the S&ML with the coordination of the HASM. The Analytical Laboratories shall be responsible for preparing an analytical data package. The data package shall include the information necessary to perform data validation to the extent indicated by the minimum requirements of Validation Level A. The analytical laboratory data package reporting requirements and content shall be in accordance with the appropriate guidance of SW-846, *Test Methods for Evaluating Solid Waste* (EPA 1986). These criteria shall be defined in work order or procurement documentation, and shall be subject to WHC review and approval. The data packages shall be legible and reproducible; any changes must be made as single-line corrections in black, nonerasable ink, and must be initialed and dated. All Analytical Laboratory data packages shall contain the following information:

- Sample receipt and tracking documentation, including identification of the organization and individuals performing the analysis, the names and signatures of the responsible analysts, sample holding time requirements, references to applicable chain-of-custody procedures, and the dates of sample receipt, extraction, and analysis

- QC data as appropriate for the methods used, laboratory blank data, and identification of any nonconformance that may have affected the laboratory's measurements system during the analysis time period

- The analytical results or data deliverables, including reduced data, reduction formulas, or algorithms

- Other supporting information, such as calibration data and raw data shall be included in the submittal of individual data packages.

The completed data packages shall be reviewed and approved by the Analytical Laboratory's QA manager before submittal to the HASM.

7.9.2 Reporting

Analytical data packages shall be archived in the Environmental Data Management Center as required in the *Quality Assurance Manual*, Section QR 17.0, "Quality Assurance Records" (WHC-CM-4-2).

Documentation of the LERF filtration testing sampling events will include a daily chain-of-custody record, as described in Section 7.6, and a laboratory notebook. Bound notebooks will be used to record the following:

- Date and time of grab sample collection
- Samplers' names, affiliation, and titles
- Waste type sampled (i.e., wastewater)
- Sample identification numbers
- Type of sample (i.e., waste, duplicate)

- Location of sampling point within the treatment process
- Operating parameters used during the test run
- Notation of sampling method
- Physical characteristics of the samples (e.g., color)
- Field observations
- Problems with, or deviations from, the sampling plan.

All notebook entries will be made in ink. Any changes to the data will be made by drawing a single line through the incorrect entry and writing the corrected entry in adjacent space. Such corrections will be initialed and dated by the responsible engineer. Each page of the notebook will be signed and dated by the responsible technician, engineer, or scientist.

This page intentionally left blank.

8.0 SAFETY & ENVIRONMENTAL

The greatest safety concern is the possible exposure of trace amounts of radionuclides and hazardous chemicals to the workers and environment. To minimize exposure to the workers, the test units will have secondary containment and the pipe joints interfacing with the LERF ports and filter skids will include secondary containment in accordance with WAC-173-303-640 (WAC 173-303 1990). All test skids will be leak checked with pressurized nitrogen gas before startup. All single-point failures that could result in injury or exposure will be avoided in the design and construction of this test equipment.

Individuals who will operate this equipment will receive 242-A facility-specific training and comply with that training. A Job Hazard Analysis will be performed in accordance with WHC-CM-5-3, Standard A-3, for each filtration system, to ensure that all WHC equipment and procedural safety requirements have been met and that all operational hazards have been identified and addressed (WHC-CM-5-3). The Job Hazard Analysis document will be maintained by the CEL.

This page intentionally left blank.

9.0 QUALITY ASSURANCE

A graded approach to QC will be used as established in the QAPP (DOE-RL 1993). Operating instrument data and analytical data will be assigned the appropriate quality level. The sampling and analysis QA requirements are described in Section 7.4.

For the backwash filtration unit, a number of operating parameters will be monitored during the test runs. Some of the data are considered critical to the results of the test, and other data are not. Those parameters considered critical will be assigned as Quality Level III (DOE-RL 1993). The parameters considered to be significant process status indicators will be assigned as Quality Level II. The following are Quality Level II and III requirements for operating parameters.

- The data must be obtained by following an approved procedure.
- The instrument maintenance/calibration must be documented.

Those parameters not considered critical or significant process status indicators will be assigned as Quality Level I. The task of recording data in laboratory notebooks or datasheets is a Quality Level I requirement.

Documentation of instrument maintenance/calibration is not required.

9.1 INSTRUMENT/MEASURING EQUIPMENT CALIBRATION

For Quality Level II and III operating data, all instrument maintenance/calibration must be documented and traceable. At a minimum, this documentation must include a complete description of the maintenance/calibration activity and results, the date maintenance/calibration was performed, and the printed name and signature of the person(s) who performed the activity. A secondary standard shall be used for the calibration. The secondary standard must be traceable to a primary National Institute of Standards and Technology standard. Documentation associated with the calibration, including calibration certificate, will be filed and made traceable through entry in the run logbook.

The main product of this test will be the data obtained. This data will be collected using a variety of instruments and gauges. To ensure that the data is correct, all instruments and gauges will be in proper working order (i.e., calibrated and dated) before use. Table 9-1 is a list of instruments and gauges to be used, and the calibration technique to be followed.

Table 9-1. Liquid Effluent Retention Facility Filtration Instrument Calibrations.

Instrument/Gauge	Calibration technique
Pressure gauge (psig)	Pressure transducers and gauges are calibrated by the manufacturer; further calibration is not required for this application.
pH meter	The pH meters are calibrated in accordance with manufacturer's instructions.
Flowmeter	The flowmeter is calibrated by passing fluid into a measured container through the meter at flow rates over the range of operation. The flow period is timed with a stopwatch to verify flow measurement accuracy. The margin of error should not exceed 0.2 gal/min.
Nephelometer	The nephelometer that measures turbidity is calibrated with standards provided by the manufacturer.
Temperature probe Temperature meter	Temperature probes with the meter or data logger are calibrated by placing the probe in boiling water and then in freezing water. The margin of error should not exceed 2 °C. Greater accuracy is not required.
Data logging meter	The channels used are tested by applying several known voltages or amperages (which-ever applies) over the range of the data logger and by checking the data logger output. The margin of error should not exceed 1 percent.

Equipment used in TSS and particle size analysis will be calibrated in accordance with manufacturer requirements and instructions.

The characterization samples will be measured according to methods specified in the current revision of SW-846 (EPA 1986).

It is not clear what biological contaminants will be present in the PC. A level-of-effort support contract will be obtained with a laboratory capable of performing biological analyses. Quantitative tests will be specified as the primary types of biological contamination are identified.

9.2 OPERATING INSTRUMENT DATA

The operating instrument data to be obtained for each unit (i.e., pH adjustment and backwash filtration) are listed in Tables 9-2 and 9-3. The bases for the quality level assignments are presented in the QAPP (DOE-RL 1993).

Table 9-2. Quality Level Requirements for pH Adjustment Unit Operating Instrument Data.

Parameter	Critical	Accuracy	Quality Assurance Level	Instrument	Frequency
pH (LERF feed)	No	± 0.2 unit	II	Glass electrode	Quarterly
pH (1st chamber)	No	± 0.2 unit	II	Glass electrode	Quarterly
pH (2nd chamber)	Yes	± 0.2 unit	III	Glass electrode	Quarterly
Liquid Level	No	± 1 percent	II	Liquid level transmitter	Quarterly

Table 9-3. Quality Level Requirements for the Liquid Effluent Retention Facility Filtration Unit Operating Instrument Data.

Parameter	Critical	Accuracy	Quality Assurance Level	Instrument	Frequency
Pressure	Yes	± 5 psig	III	Pressure transducer	Quarterly
Temperature	No	± 2 °C	I	J type thermocouple	Quarterly
Flow rate	No	± 10 percent	II	Flowmeter	Quarterly

This page intentionally left blank.

10.0 ORGANIZATION AND FUNCTION RESPONSIBILITIES

The CEL has primary responsibility for preparing test or work plans, writing work orders, preparing designs, ordering all necessary parts and equipment, and ensuring that the test assembly is installed and operated properly and safely. Proper and active communications will be maintained with all other involved groups and functions as required (i.e., Technology, Safety, Environmental, and QA).

Trained crafts personnel will assemble the test setup, assist in leak checking, and verify proper operation of the equipment before initiating testing. They will also support maintenance activities and modifications required to the equipment.

Organizational responsibilities are summarized in Table 10-1.

Table 10-1. Organization Responsibilities. (3 sheets)

Organization	Responsibilities
CEL	Prepare test plan.
	Prepare and implement run plans.
	Prepare job hazard analysis.
	Perform testing activities.
	Provide sampling task leader (chemical engineer).
	Initiate scheduling for personnel to perform sampling as required.
	Provide technical support for sampling activities.
	Review sampling data logbooks and sampling activities.
	Surveil chain-of-custody activities.
	Complete sample logsheets for process monitoring samples.
	Submit waste designation requests if necessary.
	Perform test data interpretation.[a]
	Prepare test reports.[a]
	Issue letter of instruction to HASM for analytical requirements.

Table 10-1. Organization Responsibilities. (3 sheets)

Organization	Responsibilities
EPE	Provide pertinent ETF design operating parameters to configure and operate pilot-scale equipment.
	Approve test plan.
	Approve operating procedures.
	Approve test reports.
S&ML	Provide trained samplers for sampling activities. Certified sampler shall direct sampling and packaging of samples obtained in LERF filtration testing.
	Obtain samples.
	Package samples for shipment.
	Transport samples to the analytical laboratory or shipping center.
	Document sampling activities in a controlled logbook.
	Initiate chain-of-custody for samples.
	Complete and transmit Sample Request Forms.
	Store controlled field logbooks and other sampling information.
	Provide copies of controlled field logbooks and other sampling data information to HASM, EPE, and CEL.
	Provide internal QC samples to the analytical laboratory.
	Support CEL in obtaining process monitoring samples, if requested.
HASM	Prepare statement-of-work and select contract laboratory.
	Provide field sampling requirements to S&ML.
	Transmit data packages to the EDMC. (The data packages need to include field notebooks, sampling logbooks, and analytical results.)
	File chain-of-custody documentation received from samples.
Environmental	Approve test plan.
	Approve operating procedures.
	Approve test report.

Table 10-1. Organization Responsibilities. (3 sheets)

Organization	Responsibilities
QA	Approve test plan.
	Approve operating procedures.
	Approve test report.
Safety	Approve test plan.
	Approve operating procedures.
	Approve test report.
Waste Treatment	Approve test plan.
	Approve work packages.
	Approve operating procedures.
Health Physics	Approve work packages.
	Approve operating procedures.
	Provide field support.
242-A Evaporator Operations	Approve work packages.
	Provide field support.
Site Hazardous Waste Engineering Section	Designate waste products.
	Determine waste packaging and disposal requirements.

[a]The CEL will provide a test report that includes the test conditions, observations, and analytical results including process instrumentation and sample results.

Legend:

CEL = Chemical Engineering Laboratory
EDMC = Environmental Data Management Center
EPE = Effluent Processing Engineering
ETF = Effluent Treatment Facility
HASM = Hanford Analytical Services Management
LERF = Liquid Effluent Retention Facility
S&ML = Sampling and Mobile Laboratories
QC = Quality Control

This page intentionally left blank.

11.0 SCHEDULE

The LERF filtration testing schedule information is given in the "Treatability Testing Section" of the "242A Evaporator/PUREX Condensate Treatment Facility" schedule. The LERF filtration testing schedule depends on startup of the 242A Evaporator, LERF availability, and the issuing of the *Waste Water Pilot Plant Research, Development, and Demonstration Permit* (DOE-RL 1993).

This page intentionally left blank.

12.0 REPORT

The final report will include, as a minimum, the following items:

1. Test description, test variations, and rationale for conditions of all tests
2. Complete test results of all test runs
3. All process analytical data obtained during all tests
4. Laboratory test procedures, analytical laboratory procedures, and QA methods used
5. Flowsheet of the process configurations
6. Flux across the various membranes
7. Biological content measured in the waste during testing
8. Effects of the biological constituents on the filter technology tested
9. Effects of the inorganic colloidal suspensions (if any) on the filter technology tested
10. Operational parameters.

This page intentionally left blank.

This page intentionally left blank.

13.0 DATA SHEETS

Laboratory Notebook WHC-N-719-1, *LERF Filtration Testing*, will be maintained by the CEL, and will contain a description of the equipment, operation, and test details. A record of system calibrations will be recorded in Laboratory Notebook WHC-N-720-1, *LERF Filtration Test - Calibration Data*.

The temperature, flow, turbidity, and pressure will be recorded on data loggers. The data on inorganic and biological studies will be transmitted to the CEL in letters from contracted laboratories. All of the above-mentioned records will be maintained in a project file by CEL personnel.

Daily visual inspections will be performed in lieu of secondary containment for leaks from the piping between the basin risers and the filtration system (WAC 173-303 1990). A procedure and a logbook will be used to document these inspections.

This page intentionally left blank.

14.0 REFERENCES

Comprehensive Environmental Response, Compensation, and Liability Act of 1980, 42 U.S.C. 9601 et seq.

DOE, 1988, *Radioactive Waste Management - Guidance Document*, DOE Order 5820.2A, U.S. Department of Energy, Washington, D.C.

DOE-RL, 1993, *Waste Water Pilot Plant Research, Development, and Demonstration Permit Application Revision 1A*, DOE/RL-91-39, U.S. Department of Energy-Richland Operations Office, Richland, Washington.

EPA, 1982, *Handbook for Sampling and Sample Preservation of Water and Wastewater*, EPA 600/4-82-029, U.S. Environmental Protection Agency, Washington, D.C.

EPA, 1983, *Methods for Chemical Analysis of Water and Wastes*, EPA-600/14-79-020, EMSL, U.S. Environmental Protection Agency, Washington, D.C.

EPA, 1986, *Test Methods for Evaluating Solid Waste, Physical/Chemical Methods*, SW-846, 3rd Edition, as revised, U.S. Environmental Protection Agency, Washington, D.C.

Flyckt, D. L., 1990, *Functional Design Criteria for the 242-A Evaporator and PUREX Plant Condensate Treatment Facility*, WHC-SD-C018H-FDC-001, Westinghouse Hanford Company, Richland, Washington.

Prater, L. S., 1984, *Groundwater Surveillance at the Hanford Site for Calendar Year 1983*, PNL-5041, Pacific Northwest Laboratory, Richland, Washington.

Resource Conservation and Recovery Act of 1976, 42 U.S.C. 6901 et seq.

WAC 173-303, 1990, "Dangerous Waste Regulations," *Washington Administrative Code*, as amended.

WHC-CM-4-2, *Quality Assurance Manual*, QR 17.0, "Quality Assurance Records," Westinghouse Hanford Company, Richland, Washington.

WHC-CM-5-3, *Sample Management and Administration*, Westinghouse Hanford Company, Richland, Washington.

WHC-CM-7-7, *Environmental Investigations and Site Characterization Manual*, Westinghouse Hanford Company, Richland, Washington.

This page intentionally left blank.

APPENDIX A

SAVANNAH RIVER SITE TRIP REPORT - EFFLUENT TREATMENT FACILITY FILTRATION

This page intentionally left blank.

Westinghouse Hanford Company

Internal Memo

From: Chemical Engineering Laboratory 16240-90-124
Phone: 3-2967 S4-25
Date: November 30, 1990
Subject: SAVANNAH RIVER SITE TRIP REPORT - EFFLUENT TREATMENT FACILITY FILTRATION

To: M. J. Schliebe S4-25

cc:	S. A. Barker	R2-07	D. E. McKenney	R2-11
	G. B. Becker	R3-28	C. R. Miska	C5-80
	A. F. Crane	R2-20	T. P. Moberg	S4-25
	D. L. Flyckt	R2-20	P. M. Olson	R2-20
	K. M. Hodgson	S4-25	K. E. Schull	S4-25
	D. E. Kelley	R1-48	J. P. Sloughter	T6-07
	J. W. Kelly	R3-35	R. T. Stordeur	R2-20
	E. J. Kosiancic	S0-61	D. S. Takesumi	R3-27
	A. P. Larrick	R1-51	D. A. Turner	R1-10
	R. L. McCormack	S6-01	L. D. Vanselow	R3-27
	F. N. McDonald	R2-20	J. D. Williams	H4-57
	CVK File/LB		J. J. Wong	S4-25

Process Aids/Environmental Compliance

INTRODUCTION

On November 7 through November 9 of 1990, Mr. C. V. King visited the Westinghouse Savannah River Effluent Treatment Facility (ETF), which has been in operation for two years. Information was obtained that will be used in the development of the Westinghouse Hanford C-018 effluent treatment filtration system which is similar to the ETF. A list of Savannah River Site (SRS) and Corporate Research and Development Center Personnel (STC) with whom Mr. King met are listed in Appendix A.

During the visit information was exchanged on the ETF process flowsheet and associated bottle necks (see Figure 1). The installed ceramic cross flow filtration system at the front end of the process only allows a flow of 20 to 80 percent of the design and process requirements. The reduction in flow was a result of organic and inorganic fouling on the filter surfaces and this problem has not been resolved. Designed flow requirements for the ETF have never been achieved due to poor filter system selection. Secondary bacterial growth in the granular activated carbon, ion exchange and reverse osmosis unit operations also resulted in reduction of separation efficiency of those operations.

A team of five engineers and scientists have been working on the filtration fouling problem full-time for the last two years. Eight different filtration technologies were tested using a simulant developed by the SRS personnel. The technologies included centrifugal

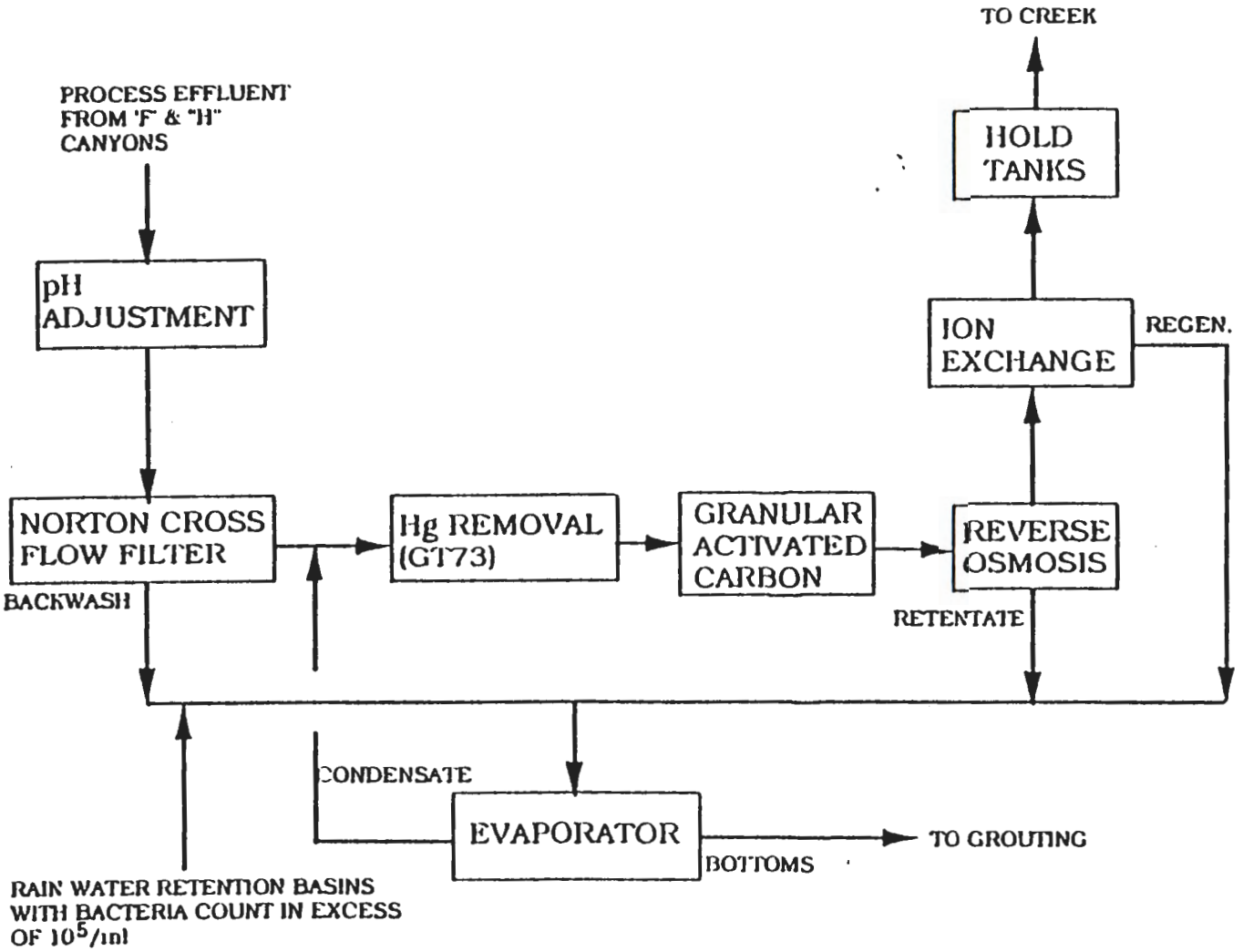

SAVANNAH RIVER EFLUENT TREATMENT FACILITY

(ETF)

FIGURE 1

ultrafiltration, deep bed filtration, stainless steel mesh filtration, sintered stainless steel powder backpulse filtration, backwashable polymeric cartridge filtration, tubular polymeric ultrafilter membrane filtration, tubular fabric filtration, electrocoagulation pretreatment followed by ceramic cross flow filtration, centrifugal filtration, and ceramic cross flow filtration.

The filters that performed the best included centrifugal ultrafiltration and tubular polymeric ultrafilter membrane. The deep bed filter (sand filter) and the backwashable polymeric cartridge filter tests also showed some promise. These four filter systems have been selected for further testing with actual process feed. In addition, tests will be run on the ceramic cross flow filters by adjusting feed and operational variables.

EFFLUENT FEED CHARACTERISTIC AND SYNTHETIC DEVELOPMENT

Two basic sources of waste water are treated by the ETF. The first source is waste water effluent from the process canyons (PUREX type processes) and tank farms "F" and "H". The second source comes from excess cooling or storm water.

The ETF influent average composition has total solids of 83 ppm with a pH which varies from 1 to 13. The chemical contaminants include the following:

- 18 ppm NH_3
- 0.031 ppm Cr
- 0.14 ppm Cu
- 0.063 ppm Hg
- 0.12 ppm Pb
- 1.3 ppm Zn
- 5.7 ppm Fe
- 2.7 ppm Al
- 5 ppm Si
- 100 ppm Tributyl Phosphate (TBP)

The simulant used by SRS was developed by adding the chemical species present in the ETF waste water that contributed to the inorganic fouling. No bacteria was added to the inorganic simulant. Typical concentrations used in the simulant were 5.7 ppm Fe (iron nitrate), 2.7 ppm Al (aluminum nitrate), 5 ppm Si (sodium silicate) and 1500 ppm sodium nitrate. The salts were dissolved in one liter of deionized water and the pH was adjusted to 1 using nitric acid. Forty gallons of filtered process water were added to the dissolved salts. The pH was adjusted to ≤ 2.7 with nitric acid prior to neutralization to pH 7.5 using NaOH.

A simulant with bacterial material was developed by using the above simulant and adding 3.0×10^6/ml bacteria.

EFFLUENT TREATMENT FACILITY UNIT OPERATIONS

The ETF treatment facility (Figure 1) operates using pH adjustment, filtration to remove suspended solids, ion exchange to remove Hg, granular activated carbon to remove organics, reverse osmosis to concentrate the salts, ion exchange to polish the remaining metalic ions in the waste stream, and evaporation to concentrate the solids for grouting. The peak capacity design of the ETF is a flow of 300 gpm influent. The system was designed and built by Chas T. Main at a total cost of 55 million dollars. The design and build period took four years.

Filtration - The pH of the ETF waste water influent from the canyons is adjusted to 7.5, to minimize the solubility of Fe/Al/Si, and passed through a 40 mesh screen. The adjusted stream is introduced at 75 psi to three parallel banks of Norton Ceramic Cross Flow Filters designed to handle 150 gpm per bank unloaded or 100 gpm per bank with a nominal partial loading of particulate. Each bank contains approximately 400 square feet of filter surface. The filter "sticks" are composed of 15μm alpha-alumina and the flow channel surface is coated with 0.2μm alpha-alumina (nominal size).

It should be noted that originally a more extensive filtration testing program was planned but the budget cuts forced curtailment of the testing. The Norton filters were selected based upon economics. The best flow rate achieved has been 80 gpm per filtration bank and has been as low as 15 gpm per bank. The filters are backflushed once per hour using approximately one minute reverse flow of the filtrate. A 10,000 gallon solution of 2% oxalic acid at 70°C is used to clean the filters once every 12-36 hours with a one hour cleaning solution circulation period.

The backflush water and the cleaning solution are sent to one of the two 20 gpm evaporators. The water to be processed from the rain water retention basins is sent directly to the evaporators if the bacterial count is above 5×10^5/ml. The filtrate specifications have been maintained at a Silt Density Index (SDI) of 3 or less and a turbidity of less than 1 NTU.

Ion Exchange - The filtrate is pumped into the Rohm & Haas GT-73 resin which adsorbs both ionic and metallic mercury. The resins also have an affinity for Pb, Cu and Cr^{+3}. There are three beds in parallel, each four feet in diameter by four foot bed depth. When filtering the rain water retention basin water with the Norton filters the resins

became a bioreactor and plugged with large quantities of bacteria (10^9/ml).

Granular Activated Carbon - Granular activated carbon is used next to adsorb TBP and n-paraffin hydrocarbon, ADA dodecane and kerosene. The carbon columns are set up in a series of two beds. Each is 10 feet in diameter with a depth 8 feet. The carbon packing is a Duratek Durac-210 50-100 mesh with a TBP capacity of 0.25g/g of dry carbon. It is set up so that the process vessel is the disposal container. At full capacity the five columns will have to be replaced each year costing $300K per column.

Reverse Osmosis - Reverse Osmosis is employed to remove the bulk of the $NaNO_3$ (2,000 ppm) and radionuclides. Three trains of polyamide thin film composite, spiral wound and Filmtec membrane elements are employed in this system. Each train has three stages designed to handle 100 gpm with a 90% water recovery. Stage 1 consists of two housings in parallel; stages 2 and 3 are single housings. Each stage contains six elements. The influent pH is adjusted to 6 before introduction into the RO system. Occasional flux losses have been restored by washing with a NaOH solution with a pH of 12 (more effective than nitric or oxalic acid). Filmtec had predicted a decontamination factor (DF) of 45 (97.8% rejection) for new elements. The actual DF has been between 6 and 18 which has still allowed them to meet the effluent content discharge limits. The RO retentate is sent to the evaporators and the permeate is fed to the Ion Exchange columns. The RO system has not been tested for 100 gpm per train yet because of the limitation from the filtration system. It appears, However, that the RO system will be able to handle the flow.

Exchange - The cation exchange system is designed to specifically remove Cs-137. The three columns operate in a series with a spare "merry-go-round" arrangement. Each bed is five feet in diameter with a five foot side bed depth. The cation is Mitsibushi HPK-25 resin. The bed is regenerated with 2 molar $NaNO_3$ solution. The regeneration solution is sent to the evaporator. No major problems have occurred with this part of the process.

The ion exchange effluent is sent to one of three 160,000 gallon treated water tanks for analysis prior to discharge to the Upper Three Runs Creek (3.5 miles away). The regeneration discharge is sent to the evaporator.

Evaporator - Two 20 gpm Blaw-Knox forced circulation evaporators with wire mesh entrainment separators are employed to concentrate the filter and ion exchange backwash and RO retentate effluents. To minimize scaling the evaporator feed is acidified to a pH of 5.5 and the circulating loop is run at a flow of 4500 gpm such that the high velocity scours the heat transfer surface. The bottoms have a flow of

1 gpm. The bottoms contain about 2 wt% total solidified solids (TSS) and 25-30 wt% total dissolved solids (TDS). The bottoms are neutralized with NaOH and sent to tank farms until the solution can be grouted. The overheads are routed back to the GT-73 resin influent solution. Because of the extra demand on the evaporator due to failure of the filters, the evaporators are not able to meet the full production process needs of the ETF process.

BIOLOGICAL FOULING

After running the process for a few months, it was determined that the bacterial fouling was coming from the rain water retention basins. The bacterial fouling reduced the filter flow to less than 20 gpm. Shortly after retention basin water was fed to the system, the GT-73 resin column plugged and the granulated activated carbon column efficiency was reduced significantly due to bacterial fouling. The RO DF dropped to 6 because of bacterial growth on the membranes. Bacterial counts were taken at each point in the process. The live and dead bacteria count was measured using the Acrodime Orange Direct Count (AODC) method and the dead bacteria was measured using a viability count with the AODC. Using the AODC technique the count was 10^3/ml to 10^8/ml in the pH adjustment tanks, less than 10^5/ml at the filtrate side of the Norton filters, 10^9/ml in the GT-73 resin, 10^7/ml on both sides of the granular activated carbon column, and less than 10^3/ml in the permeate from the RO and effluent of the cation exchange column.

The entire system was "sanitized" after it was determined that biofouling was a problem. The sanitization included chlorination of the piping, NaOH wash of the GT-73 resin, and replacing the granular activated carbon beds.

Performance filtration tests were run using the Norton filters and simulants with no bacteria, 10^3 bacteria/ml, and 10^7 bacteria/ml. The tests showed that a flux loss of 50% occurred with the 10^7 bacteria/ml simulant when compared to the simulant with no bacteria. A flux loss of 10% was observed when comparing the simulant with 10^3 bacteria/ml with the simulant having no bacteria. From these tests it was decided that an influent with a bacteria count greater than 10^3 should be sent to the evaporators rather than the Norton filters until an acceptable solution to the filtration fouling problem could be found.

Addition techniques of filtering the bacteria using the Norton filters were considered. These included using Diatomaceous Earth (DE), killing the bacteria before filtration, destroying the bacteria cells using acid before filtration, destroying the bacteria cells with ozonation and lye, and adding aluminum nitrate to the influent before filtration.

The technique of adding DE to the influent is a common method which industry employs to deal with bacteria problems. It is a proven technology that would require a quantity of 200 ppm in the waste stream. However, if used in this application it presents complex problems in dealing with the secondary wastes from the filter. The DE backwash waste would have to be grouted. Grout will not bond to DE due to its inert properties. This would require ten times the amount (by volume) of grout that is normally required to grout waste materials.

Tests were run using the inorganic simulant plus 10^7/ml dead bacteria. The bacteria-spiked simulant was filtered through the Norton filter. When compared with bacteria-free simulant tests, the flux through the filter was 50% less.

Acid was added to the inorganic simulant with the 10^7/ml bacteria until the bacteria dissolved. The resultant flux through the Norton filters was 60% less when compared with the bacteria free simulant. It was found that the filter was fouled with large organic chains from the destroyed bacteria. The fouling material had to be removed using an acid wash because of its sticky nature; the destroyed bacteria coated the wall of the process equipment causing accelerated reduction in efficiency. Similar test using ozone-lysed bacteria were run with slightly less flow through the filter than with the acid treated bacteria.

Aluminum nitrate was added to the inorganic simulant with the bacteria (10^7/ml) in order to tie the bacteria up in larger particles. The filtration tests showed that the flux for the simulant was similar to the bacteria free simulant. Over a period of a few backflush cycles, however, the bacteria containing simulant flux dropped of by 50%. This was due to exopolymer (bacterial excreate) from the bacteria collecting on the filter surface. The exopolymer is a sticky substance that gives the filter a "memory" of previous contamination. The contaminant can be removed by soaking the filter in a two percent oxalic acid solution at 70°C.

INORGANIC FOULING

When operating the ETF with the influent from the processing plants the Norton filters foul as indicated by a flow decrease from 100 gpm to 80 gpm per filter train. The filters were analyzed for surface contaminant content and physical properties. The analysis showed that the contaminants were Al, Fe and Si compounds. The particle sizes were determined using a filtration stack and weighing the filters before and after. It was determined that the particle sizes ranged from .015µm-0.2µm. The particles are colloidal and gelatinous in nature with a "sticky" surface. At a pH of 7.5 the particles have a

negative charge. The Norton filters have a positive charge at pH levels below 9. This condition compounds the "sticky" nature of the influent feed solution because of the opposite charge attraction.

Several bench top pretreatment techniques were tested to improved the performance of the Norton filters. Sodium hydroxide was added to the inorganic simulant to adjust the pH to 7.5. This test was run through the filter as a baseline. The temperature was increased to 40°C resulting in an improvement of 15% flow. The next test involved adding sodium carbonate (Na_2CO_3), also resulting in a 15% improvement. Next a test was run acidifying the feed then adding NaOH and carbonate resulting in an improvement in flow of 1.15 to 2.0 times the original flow. Addition of lime or phosphates had no effect on the flow rate. A polymer flocculent (Betz) was added resulting in a reduced flow rate of 0.4 to 0.5 times the original flow rate. Aluminum levels were increased significantly by adding 100 mg/l of aluminum nitrate and the resulting flow increased by 1.5 to 2 times the original flow. Other tests were run adjusting the simulant to different pH levels with no significant increase of flow through the filters. The multiplier is based upon a 20 hour run of the filter.

Different pore sizes were tested running the inorganic simulant with pH adjustment using NaOH (bench top scale). The comparison standard was 0.2µm average pore size. The 5 micron average pore filter operated at a flow rate multiplier of 0.3 when compared with the standard. The 1.2 micron filter operated at a multiplier of 1.8 when compared with the standard. The multiplier is based upon a 20 hour run of the filter.

ALTERNATE FILTRATION TESTING PROGRAM

The following tests were run using an inorganic simulant developed by SRS personnel.

Ceramic Ultra Cross Flow Filters - A Millipore Ceramic Filter (Norton Filter) test unit similar to the ETF filtration train was tested to establish a baseline for the remaining filters to be tested. The inorganic simulant flow rate was 6 gpm. The cross filter membrane pressure was set at 30 psi. The filter was backflushed for three minutes every 30 minutes of operation. The backflush pressure was set at 80 psi. The test was run for five hours. Over the five-hour run cycle the permeate flow rate dropped by 25% due to filter fouling. To restore the filter to the original flow rate an acid wash using a two percent oxalic acid solution at 70°C was required. The contact for the Norton Filter was Burke Fahlman of Millipore, phone 1-800-225-3384.

Centrifugal Ultrafilter - The centrifugal ultrafiltration unit contained 9.6 square feet of PVDF membrane arranged in flat sheet discs. The simulant was fed into the filtration system at 50 psi and 3 gpm. The 12 inch discs were rotated at 1000 rpm. The solids were continually removed through a center cone mechanism. Consequently, the liquid recovery was greater then 97% for this filtration system. The flux rate of the permeate remained constant over the 10 hour period, The permeate maintained a turbidity reading of less than 0.6 NTU. At the end of the test the solids on the outer fringes of the filter membrane were dislodged by simply stopping and restarting the filter rotation. The vendor contact of this filtration system was William Greene of Aquatechnology, phone (213) 376-3241.

Deep Bed Filtration - The deep bed filtration test unit consisted of a clarifier, followed by a mixed media bed of several grades of sand and anthracite. The feed was introduced at a flow of 13 gpm and 70 psi. It was found that adding a "polymer/alum" mixture as a flocculent the filtration process was effective at keeping the turbidity below 1 NTU for a period of three hours. Backwashing with 56% (by volume) of the filtrate restored the filter to the original filtration conditions and turbidity. The deep bed filter seem to be efficient at removing the colloidal suspension but the liquid recovery of the filter was extremely low causing this filtration technique to be less than acceptable. The Vendor contact was Henry G. Daniels of Culligan Water Treatment, phone (803) 356-4014.

Stainless Steel Mesh - The stainless steel mesh filter (2 micron absolute) was fed at 7 to 8 gpm. The 45 psi differential pressure rating was reached at three minutes of operation. The filter was backpulsed using 250 psi steam. The repeatability of the filtration times following backpulsing was not demonstrated indicating that the high pressure backpulse was unable to remove the solids from the filter. The filtrate turbidity was well above 1 NTU. The test was discontinued due to the obvious failure of the filtration system. The vendor contact for this test is Seth J. Perkinson, The Perkinson Co., phone (704) 525-8191.

Sintered Stainless Steel Membrane - A five micron absolute sintered stainless steel cartridge type filter was used for this test. After two minutes of operation the turbidity dropped below 1 NTU as result of filter cake formation. The first cycle lasted 18 minutes ending with an air backwash at 40 psi. After 27 cycles in a six-hour period the test was discontinued. The permeate flow rate had dropped to less than 50%. The process was discontinued because the performance of this filter was not better than that of the Norton ceramic filters. An acid wash would be required to restore the filter to the original flow rate. The vendor contact for this test was Lawrence D. Weber of Pall Corporation, phone (516) 671-4000.

Backwashable Polymeric Cartridge - The backwashable polymeric cartridge tested had an absolute micron rating of 1. The initial filter flow rate was 0.25 gpm and the feed pressure was 40 psi. After 60 minutes the differential pressure of the filter reached 15 psi. The filter was backwashed with air at a pressure of 40 psi. The second cycle only lasted 11 minutes. The backflush pressure was adjusted to 60 psi. The next cycle ended at 15 minutes. After allowing the filter to soak overnight in water the cycle time increased to 37 minutes for the first cycle. After the first cycle it dropped to 11 minutes. The flow rate of the filter seemed to be intermittent between backwashes. The test ended when the filter split during backpulsing on the 20th cycle. The filter was able to produce a filtrate with a Turbidity reading of less than 1. The soaking in water event would suggest that the filter experienced air lock after the backpulse. Tests will be run to test a liquid backpulse rather than an air backpulse to avoid air lock of the filter. The filter split because it did not have the correct filter encasement, this also could easily be corrected. The gelatinous material did not seem to stick to the filter media as it did with the ceramic and the sintered metal filters. The vendor contact for this filtration system was Lawrence D. Weber of Pall Corporation, phone (516) 671-4000.

Tubular Polymeric Ultrafilter Membrane - The 1-inch diameter elements with 17.6 ft^2 of surface area were made of negatively charged PVDF membrane having a 50,000-100,000 nominal molecular weight cutoff (NMWC). The filtrate flow rate was approximately 5 gpm with a pressure of 27.5 psi. The filter was cleaned by forcing sponge balls down the tube in place of backflush techniques. The operation was continuous even during the clean out operations with the sponge balls. The turbidity of the filtrate was less than 0.3 NTU. The overall flux performance of the filter was comparable to the ceramic filter. The advantage to this filter was continuous operation without the volumes of backflush fluid and cleaning solution required to support the ceramic filters. The vendor contact for this system was Norman Jardine of Equipment Associates, Inc., phone (704) 522-0170.

Tubular Fabric - The tubular fabric filter was rated nominally at 1-3 microns with a feed rate of 0.75 to 10 gpm. During this operation the turbidity of less than 1 NTU was never achieved. The filter was cleaned using a backwash cycle. As the cycles were continued the flux dropped off dramatically, indicating that the backwash cycles did not clean the filters to an acceptable level. It was found that soaking the filter in 1M nitric acid solution restored the filter to the original flux. This technology was rejected however because the turbidity requirements could not be met. The vendor contact for this system was Randy McKnight of Mec-Tric Control Co., phone (704) 376-8555.

Electrocoagulation Pretreatment - This system electrolytically dissolved aluminum and iron electrodes into the solution. The extra metals would theoretically act as a flocculent for the colloidal materials in the ETF influent. The theory suggested that the quantity of particles less than 0.2 micron would be significantly reduced and the particles remaining would be more crystalline in nature and easier to be filtered. The flocculent treatment did not decrease the number of small particles and thus, the test failed. This technology is designed for solutions with greater quantity of solids than found in the ETF influent. The vendor contact for this system was Chester Fisher of Duratek Corp., phone (301) 290-2340.

Centrifuge - The centrifuge was operated at a flow rate of 2 gpm and filter rotation speed of 8250 rpm (8 in. diameter disk). The filtrate never dropped below 3.4 NTU which does not meet the filtrate specifications of less than 1 NTU. The centrifuge system is limited to removing much larger particles than are present in this waste stream. The vendor contact for this system was Al Goble of Separation Equipment Co., phone (813) 685-2065.

PLANNED STUDIES

It has been determined that 5 different filters should be tested to determine the necessary modification to the ETF to improve performance. The filters to be tested include the Norton ceramic filter with Al addition, ultra centrifugal filtration, tubular polymeric ultra filtration, deep bed filtration, and backwashable polymeric cartridge filtration. Each filter will be purchased at pilot plant scale and tested using the actual ETF influent. The test will be run for a duration of several days rather than a few hours. From these tests the optimal filtration system will be selected based on economics, functionality, dependability and percent of liquid recovery. If 97% of liquid recovery cannot be achieved a new evaporator will have to be added to the ETF process in order to meet influent surge demands.

SCHEDULE

Each test will be run for a duration of two months and will be operated in parallel with a Norton ceramic filter as a control. The procurement of these pilot plants have already begun. It is planned that the procurement will be complete and plants operational by July 1991. The tests should be completed by the end of October 1991. At this point a selection of the two best candidates would be made and run for an additional four months. At the end of the four-month period the best candidate will be selected and added to the revised

ETF design. Optimization runs would continue for one year using the selected pilot plant.

COSTS

To date an estimated one million dollars has been spent in finding a solution to the filtration problems of the ETF. Before completion of all the test it is estimated that an additional 0.7 millions dollars will be spent. The estimate for the final plant upgrades is about 27 million dollars.

CONCLUSIONS

In the original approach to designing the ETF it was assumed that the filtration operation was straight forward. As a result funding for the filtration tests were cut. It has since proven to be a very expensive cut and could eventually cost SRS an additional 29 million dollars in order to meet ETF influent flow requirements. The C-018 influent stream is similar to the ETF influent stream. It is said that hindsight is 20/20 vision and we have the benefit of that vision from the SRS experience.

RECOMMENDATIONS

It is recommended that a filtration test program for C-018 be developed in a manner which coordinates with the SRS experience. The tests should be pilot plant sized tests that use actual LERF solution as the influent for the filters. These test will require funding for filter test pilot plants similar to those selected by SRS. Careful planning of the filtration test program here at Hanford can help us avoid the same costly mistakes that plague SRS.

REFERENCE

Georgeton, G. K. and M. R. Poirier, 1990, *Alternative Filtration Testing Program: Preliminary Evaluation of Filter Test Results*, WSRC-RP-90-1145, Rev. 0, Westinghouse Savannah River Company, Aiken, South Carolina.

C. V. King, Engineer
Chemical Engineering Laboratory

HAD

APPENDIX A

LIST OF THE INDIVIDUALS MET WITH AT SRS

NAME	REPRESENTING	PHONE NUMBER
Doug Brown	SRS/WMT	(803) 557-1447
Cam Bryan	SYS. ENG. (SRS)	(803) 442-5487
H. A. Burgman	STC	(412) 256-2110
Gus K. Georgeton	SRL	(803) 725-2838
R. R. Kulkarin	SRS/WMT	(803) 557-8182
Dan McCabe	SRL	(803) 725-6395
Dave McLawghlin	STC	(412) 256-2138
Michael Poirier	SRL	(803) 725-6000
Carol B. Sherburne	SRS/WMO	(803) 557-8058
Jeff Siler	SRL	(803) 725-6379
Tom Wenck	SRS/WMT	(803) 557-8152
A. W. Wiggins, Jr.	SRS/WMT	(803) 557-8182

This page intentionally left blank.

APPENDIX B
POLYMERIC BACKWASH FILTER SPECIFICATIONS

This page intentionally left blank.

The backwash filter was built in compliance with the following specifications:

- The filter membrane consists of a Prosep[3] 8-μm absolute polypropylene backwashable filter cartridge.
- Filtrate consists of backwash solution at 45 psig minimum.
- The minimum filtrate flowrate is 5 gal/min
- Feed, permeate, and concentrate line connectors are constructed of 1.5-in. Schedule 80 steel NPT threaded pipe.
- The filter has a 460-VAC/60-hz three-phase power supply.
- The filter can be backwashed automatically at a set differential pressure setting.
- The filter is constructed with SST ball-valved sample ports at the permeate, concentrate, and filter feed locations.
- The system is skid mounted for ease of movement; the skid foot print is 13 ft, 8 in. x 4 ft, 10 in.
- The system is capable of outside operation, in inclement weather, with ambient temperatures ranging from 32 to 115 °F.
- The system is designed to operate without overheating during continuous operation.
- The expected filter membrane life exceeds 1 yr of continuous use.
- The system requires no more than a few minutes of daily operator attention.
- All interim tanks required for the filtration system are provided.
- The system has the following capabilities:
  - Removes biological growth and inorganic solids greater than 5 μm absolute
  - Recovers >95 percent of liquid (minimal secondary waste)
- Secondary containment under the entire liquid processing system ensures containment if leaks should occur in any of the piping, tank, or pumping systems. The containment pan includes a drain with 1.5-in. NPT threads. The secondary containment system is covered to prevent entry of rain water. The secondary containment system has the following capabilities.
  - Holdings 110 percent of the largest system tank volume.

---

[3]Prosep is a trademark of Pall Corporation.

- Shuts down operation if the system begins to leak.

- Electrical systems, recorders, controllers, and sensors meet National Electrical Manufacturing Association enclosure requirements and are readily accessible.

- Sensors and overrides are provided to detect and shut down the system if liquid feed is lost during filter operation.

- Pump motors have high-temperature overrides to protect against excessive operating heat.

- The electrical system has a reset button that manually restarts the system in the event of power loss recovery; the system remains off when power is restored until the reset button is activated

- A complete set of design prints is included with the system.

- A recommended operating procedure is provided by the vendor.

- System components are readily accessible for service and repair.

- The filter includes the following instrumentation:

  - Flow meters and recorders continuously monitor and record the flow of the filter membrane feed, concentrate, and permeate (flow meters and recorders are selected by the vendor).

  - A vendor-selected recording system continuously measures and records liquid pressure on the feed, filtrate, and concentrate sides of the filter.

  - In-line turbidity meters continuously monitor and record data on both the feed and permeate side of the filter membrane. The anticipated feed solution will have a turbidity between 1 and 200 NTU. The turbidity meters must be easily accessible and the readings must be adjustable to compensate for turbidity probe fouling. Sample measured with the turbidity meter must be representative of the associated stream.

  - A temperature measuring device continuously monitors and records influent and permeate temperatures.

APPENDIX C
QUALITY ASSURANCE PROJECT PLAN QUALITY LEVELS

This page intentionally left blank.

Data Acquisition Protocol Appropriate to Test Objectives.

Quality Level	Test Objective	Equipment Configuration	Operating Parameters	Analytical Measurements
I	Equipment familiarization and shakedown.	Notebook sketch.	Recorded in notebook and on data sheets. Documentation of equipment maintenance/ instrument calibrations not required.	Data to be recorded in notebook/data sheets. Determination of precision, accuracy, representa-tiveness, comparability, and completeness (PARCC) not required.
II	a. Optimization. b. Determination of treatability range. c. Design data.	Documented in notebook, H-drawings, vendor information, operating procedures, and/or Test Plans.	Follow approved procedure. Maintenance/instrument calibrations to be documented.	Same as for Quality Level I above except: documentation of analytical instrument calibrations required. Analyses to be based on SW-846 or other EPA procedure as closely as possible. Deviations to be noted in lab notebook.
III	Delisting petition, RCRA permitting, and WAC 173-216 permitting data.	Same as for Quality Level II above.	Same as for Quality level II above.	Analyses to be SW-846 or other EPA procedure (no deviations allowed). Data to be "validated" by the Office of Sample Management. Blanks, matrix spikes, matrix spike duplicates, surrogates (VOA), and determination of PARCC required.
IV	Confirmation of delisting and permitting data.	Same as for Quality Level II above.	Same as for Quality Level II above.	Analyses to be performed at CLP laboratory.

This page intentionally left blank.