AR TARGET SHEET

The following document was too large to scan as one unit; therefore, it has been broken down into sections.

DOCUMENT#	BNFL-5193-RCRA-01
TITLE	River Protection Project Waste Treatment Plant Dangerous Waste Permit Application (5 volumes)
EDMC#	0053076
SECTION	9 of 11

53076
5/6

BNFL Inc.

BNFL-5193-RCRA-01, Rev. 2

RIVER PROTECTION PROJECT
WASTE TREATMENT PLANT

RPP-WTP DANGEROUS WASTE PERMIT APPLICATION

Volume V

April 28, 2000

Prepared for:

U.S. Department of Energy
Richland Operations Office
Contract DE-AC06-96RL13308

Prepared By:

BNFL Inc.
3000 George Washington Way
Richland, Washington 99352

Appendix D

Appendix D

Selection of COPCs and ROPCs for Human Health and Ecological Risk Assessment

Table D-1. Selection of Human Health COPCs for Inclusion in the Quantitative PRA

		Are human health toxicity data available?		Can an exposure concentration be quantified?		Can human health risk be quantified?			
Constituent of Potential Concern	CAS Registry Number	Acute Toxicity? [a]	Chronic Toxicity? [b]	Emission Rate Available to Quantify Direct Exposure? [c]	Methods and Parameters Available to Quantify Indirect Exposure? [d]	Acute risk? [e]	Chronic Risk for Direct Exposure? [f]	Chronic Risk for Indirect Exposure? [g]	Is the constituent a quantitative COPC? [h]
Organics									
Aromatic Halogenated Hydrocarbons									
2,3,4,6-Tetrachlorophenol	58-90-2	no	yes	yes	yes	no	yes	yes	yes
4-Chloro-3-methylphenol	59-50-7	yes	no	yes	yes	yes	no	no	yes
Aromatic Nonhalogenated Hydrocarbons									
2-Nitrotoluene	88-72-2	no	yes	yes	yes	no	yes	yes	yes
4-Nitrobiphenyl	92-93-3	yes	no	yes	yes	yes	no	no	yes
Benzaldehyde	100-52-7	yes	yes	no	no	no	no	no	no
Benzene	71-43-2	yes	yes	yes	yes	yes	yes	yes	yes
Benzyl alcohol	100-51-6	yes	yes	no	no	no	no	no	no
Ethyl benzene	100-41-4	yes	yes	yes	yes	yes	yes	yes	yes
m-Xylene	108-38-3	yes	yes	yes	yes	yes	yes	yes	yes
o-Xylene	95-47-6	yes	yes	yes	yes	yes	yes	yes	yes
p-Xylene	106-42-3	yes	no	yes	yes	yes	no	no	yes
Styrene	100-42-5	yes	yes	yes	yes	yes	yes	yes	yes
Toluene	108-88-3	yes	yes	yes	yes	yes	yes	yes	yes
Non-aromatic Nonhalogenated Hydrocarbons									
1,2-Epoxybutane	106-88-7	yes	yes	yes	yes	yes	yes	yes	yes
1,3-Butadiene	106-99-0	yes	yes	yes	yes	yes	yes	yes	yes
1,4-Dioxane	123-91-1	yes	yes	yes	yes	yes	yes	yes	yes
1-Methylpropyl alcohol	78-92-2	yes	no	yes	yes	yes	no	no	yes
1-Nitropropane	108-03-2	yes	no	yes	yes	yes	no	no	yes
2,2,4-Trimethylpentane	540-84-1	yes	no	yes	yes	yes	no	no	yes
2-Butanone	78-93-3	yes	yes	yes	yes	yes	yes	yes	yes
2-Butenaldehyde (2-Butenal)	4170-30-3	yes	no	yes	yes	yes	no	no	yes

Table D-1. Selection of Human Health COPCs for Inclusion in the Quantitative PRA

		Are human health toxicity data available?		Can an exposure concentration be quantified?		Can human health risk be quantified?			
Constituent of Potential Concern	CAS Registry Number	Acute Toxicity? [a]	Chronic Toxicity? [b]	Emission Rate Available to Quantify Direct Exposure? [c]	Methods and Parameters Available to Quantify Indirect Exposure? [d]	Acute risk? [e]	Chronic Risk for Direct Exposure? [f]	Chronic Risk for Indirect Exposure? [g]	Is the constituent a quantitative COPC? [h]
2-Ethoxyethanol	110-80-5	yes	yes	no	no	no	no	no	no
2-Heptanone	110-43-0	yes	no	yes	yes	yes	no	no	yes
2-Hexanone	591-78-6	yes	no	yes	yes	yes	no	no	yes
2-Methoxyethanol	109-86-4	yes	yes	no	no	no	no	no	no
2-Methyl-2-propanol	75-65-0	yes	no	yes	yes	yes	no	no	yes
2-Methyl-2-propenenitrile	126-98-7	yes	yes	yes	yes	yes	yes	yes	yes
2-Methylaziridine	75-55-8	yes	no	yes	yes	yes	no	no	yes
2-Methylpropyl alcohol	78-83-1	yes	yes	yes	yes	yes	yes	yes	yes
2-Pentanone	107-87-9	yes	no	yes	yes	yes	no	no	yes
2-Propanone (Acetone)	67-64-1	yes	yes	yes	yes	yes	yes	yes	yes
2-Propene-1-ol	107-18-6	yes	yes	yes	yes	yes	yes	yes	yes
2-Propyl alcohol	67-63-0	yes	no	yes	yes	yes	no	no	yes
3-Heptanone	106-35-4	no	no	yes	yes	no	no	no	no
3-Methyl-1-butanol	123-51-3	yes	no	yes	yes	yes	no	no	yes
3-Methyl-2-butanone	563-80-4	no	no	yes	yes	no	no	no	no
3-Pentanone	96-22-0	no	no	yes	yes	no	no	no	no
4-Heptanone	123-19-3	no	no	yes	yes	no	no	no	no
4-Methyl-2-pentanone	108-10-1	yes	yes	yes	yes	yes	yes	yes	yes
4-Methyl-3-penten-2-one	141-79-7	yes	no	yes	yes	yes	no	no	yes
5-Methyl-2-hexanone	110-12-3	yes	no	yes	yes	yes	no	no	yes
Acetaldehyde	75-07-0	yes	yes	yes	yes	yes	yes	yes	yes
Acetamide	60-35-5	yes	no	yes	yes	yes	no	no	yes
Acetic acid	64-19-7	yes	no	yes	yes	yes	no	no	yes
Acetic acid ethyl ester	141-78-6	yes	yes	yes	yes	yes	yes	yes	yes
Acetic acid n-butyl ester	123-86-4	no	no	yes	yes	no	no	no	no
Acetonitrile	75-05-8	yes	yes	yes	yes	yes	yes	yes	yes
Acrolein	107-02-8	yes	yes	yes	yes	yes	yes	yes	yes

Table D-1. Selection of Human Health COPCs for Inclusion in the Quantitative PRA

		Are human health toxicity data available?		Can an exposure concentration be quantified?		Can human health risk be quantified?			
Constituent of Potential Concern	CAS Registry Number	Acute Toxicity? [a]	Chronic Toxicity? [b]	Emission Rate Available to Quantify Direct Exposure? [c]	Methods and Parameters Available to Quantify Indirect Exposure? [d]	Acute risk? [e]	Chronic Risk for Direct Exposure? [f]	Chronic Risk for Indirect Exposure? [g]	Is the constituent a quantitative COPC? [h]
Acrylonitrile	107-13-1	yes	yes	yes	yes	yes	yes	yes	yes
Bis(isopropyl)ether	108-20-3	no	no	yes	yes	no	no	no	no
Butane	106-97-8	yes	no	yes	yes	yes	no	no	yes
Carbon disulfide	75-15-0	yes	yes	yes	yes	yes	yes	yes	yes
Cyanogen	460-19-5	yes	yes	no	no	no	no	no	no
Cyclohexane	110-82-7	yes	no	yes	yes	yes	no	no	yes
Cyclohexanone	108-94-1	yes	yes	yes	yes	yes	yes	yes	yes
Cyclohexene	110-83-8	yes	no	yes	yes	yes	no	no	yes
Cyclopentane	287-92-3	no	no	yes	yes	no	no	no	no
Ethyl alcohol	64-17-5	yes	no	yes	yes	yes	no	no	yes
Ethyl ether	60-29-7	yes	yes	yes	yes	yes	yes	yes	yes
Ethyl methacrylate	97-63-2	no	yes	no	no	no	no	no	no
Formaldehyde	50-00-0	yes	yes	yes	yes	yes	yes	yes	yes
Formamide	75-12-7	yes	no	yes	yes	yes	no	no	yes
Formic acid	64-18-6	yes	yes	yes	yes	yes	yes	yes	yes
Formic acid, methyl ester	107-31-3	no	no	yes	yes	no	no	no	no
Glycidylaldehyde	765-34-4	yes	yes	no	no	no	no	no	no
Methyl acetate	79-20-9	no	yes	yes	yes	no	yes	yes	yes
Methyl alcohol	67-56-1	yes	yes	yes	yes	yes	yes	yes	yes
Methyl isocyanate	624-83-9	yes	no	yes	yes	yes	no	no	yes
Methyl methacrylate	80-62-6	yes	yes	no	no	no	no	no	no
Methyl tert-butyl ether	1634-04-4	yes	yes	yes	yes	yes	yes	yes	yes
Methylacetylene	74-99-7	yes	no	yes	yes	yes	no	no	yes
Methylcyclohexane	108-87-2	yes	yes	yes	yes	yes	yes	yes	yes
N,N-Dimethylacetamide	127-19-5	yes	no	yes	yes	yes	no	no	yes
n-Butyl alcohol	71-36-3	no	yes	yes	yes	no	yes	yes	yes
n-Heptane	142-82-5	yes	no	yes	yes	yes	no	no	yes

Table D-1. Selection of Human Health COPCs for Inclusion in the Quantitative PRA

		Are human health toxicity data available?		Can an exposure concentration be quantified?		Can human health risk be quantified?			
Constituent of Potential Concern	CAS Registry Number	Acute Toxicity? [a]	Chronic Toxicity? [b]	Emission Rate Available to Quantify Direct Exposure? [c]	Methods and Parameters Available to Quantify Indirect Exposure? [d]	Acute risk? [e]	Chronic Risk for Direct Exposure? [f]	Chronic Risk for Indirect Exposure? [g]	Is the constituent a quantitative COPC? [h]
n-Hexane	110-54-3	yes	yes	yes	yes	yes	yes	yes	yes
Nitromethane	75-52-5	yes	no	yes	yes	yes	no	no	yes
n-Nonane	111-84-2	yes	no	yes	yes	yes	no	no	yes
n-Octane	111-65-9	no	no	yes	yes	no	no	no	no
n-Pentane	109-66-0	yes	no	yes	yes	yes	no	no	yes
n-Propionaldehyde	123-38-6	yes	no	yes	yes	yes	no	no	yes
n-Propyl alcohol	71-23-8	yes	no	yes	yes	yes	no	no	yes
n-Valeraldehyde	110-62-3	no	no	yes	yes	no	no	no	no
Oxirane	75-21-8	yes	yes	yes	yes	yes	yes	yes	yes
p-Cymene	99-87-6	no	no	no	no	no	no	no	no
Phosgene	75-44-5	yes	no	no	no	no	no	no	no
Propargyl alcohol	107-19-7	yes	yes	no	no	no	no	no	no
Propionic acid	79-09-4	yes	no	yes	yes	yes	no	no	yes
Propionitrile	107-12-0	yes	no	yes	yes	yes	no	no	yes
Propylene gylcol monomethyl ether	107-98-2	yes	yes	no	no	no	no	no	no
p-tert-Butyltoluene	98-51-1	no	no	yes	yes	no	no	no	no
Triethylamine	121-44-8	yes	yes	yes	yes	yes	yes	yes	yes
Trimethylamine	75-50-3	yes	no	yes	yes	yes	no	no	yes
Vinyl acetate	108-05-4	yes	yes	yes	yes	yes	yes	yes	yes
Non-aromatic Halogenated Hydrocarbons									
1,1,1,2-Tetrachloro-2,2-difluoroethane	76-11-9	no	no	yes	yes	no	no	no	no
1,1,1,2-Tetrachloroethane	630-20-6	yes	yes	yes	yes	yes	yes	yes	yes
1,1,1-Trichloroethane	71-55-6	yes	yes	yes	yes	yes	yes	yes	yes
1,1,2,2-Tetrachloro-1,2-difluoroethane	76-12-0	no	no	yes	yes	no	no	no	no
1,1,2,2-Tetrachloroethane	79-34-5	yes	yes	yes	yes	yes	yes	yes	yes
1,1,2,2-Tetrachloroethene	127-18-4	yes	yes	yes	yes	yes	yes	yes	yes

Table D-1. Selection of Human Health COPCs for Inclusion in the Quantitative PRA

		Are human health toxicity data available?		Can an exposure concentration be quantified?		Can human health risk be quantified?			
Constituent of Potential Concern	CAS Registry Number	Acute Toxicity? [a]	Chronic Toxicity? [b]	Emission Rate Available to Quantify Direct Exposure? [c]	Methods and Parameters Available to Quantify Indirect Exposure? [d]	Acute risk? [e]	Chronic Risk for Direct Exposure? [f]	Chronic Risk for Indirect Exposure? [g]	Is the constituent a quantitative COPC? [h]
1,1,2-Trichloroethane	79-00-5	yes	yes	yes	yes	yes	yes	yes	yes
1,1,2-Trichloroethylene	79-01-6	yes	yes	yes	yes	yes	yes	yes	yes
1,1-Dichloroethane	75-34-3	yes	yes	yes	yes	yes	yes	yes	yes
1,1-Dichloroethene	75-35-4	yes	yes	yes	yes	yes	yes	yes	yes
1,2,2-Trichloro-1,1,2-trifluoroethane	76-13-1	yes	yes	yes	yes	yes	yes	yes	yes
1,2,3-Trichloropropane	96-18-4	yes	yes	yes	yes	yes	yes	yes	yes
1,2-Dibromo-3-chloropropane	96-12-8	yes	yes	no	no	no	no	no	no
1,2-Dichloro-1,1,2,2-tetrafluoroethane	76-14-2	yes	no	yes	yes	yes	no	no	yes
1,2-Dichloroethane	107-06-2	yes	yes	yes	yes	yes	yes	yes	yes
1,2-Dichloroethylene	540-59-0	yes	yes	yes	yes	yes	yes	yes	yes
1,2-Dichloropropane	78-87-5	yes	yes	yes	yes	yes	yes	yes	yes
1,3-Dichloropropene	542-75-6	yes	yes	no	no	no	no	no	no
1,4-Dichloro-2-butene	764-41-0	yes	yes	no	no	no	no	no	no
1-Chloroethene	75-01-4	yes	yes	yes	yes	yes	yes	yes	yes
2,2-Dichloropropionic acid	75-99-0	no	yes	yes	yes	no	yes	yes	yes
2-Chloropropane	75-29-6	no	yes	no	no	no	no	no	no
3-Chloropropene (Allyl chloride)	107-05-1	yes	yes	yes	yes	yes	yes	yes	yes
Bromochloromethane	74-97-5	yes	no	yes	yes	yes	no	no	yes
Bromodichloromethane	75-27-4	yes	yes	yes	yes	yes	yes	yes	yes
Bromoethene	593-60-2	yes	yes	no	no	no	no	no	no
Bromoform	75-25-2	yes	yes	no	no	no	no	no	no
Bromomethane	74-83-9	yes	yes	yes	yes	yes	yes	yes	yes
Carbon tetrachloride	56-23-5	yes	yes	yes	yes	yes	yes	yes	yes
Chlorodibromomethane	124-48-1	yes	yes	no	no	no	no	no	no
Chlorodifluoromethane	75-45-6	yes	yes	yes	yes	yes	yes	yes	yes
Chloroethane	75-00-3	yes	yes	yes	yes	yes	yes	yes	yes
Chloroform	67-66-3	yes	yes	yes	yes	yes	yes	yes	yes

Table D-1. Selection of Human Health COPCs for Inclusion in the Quantitative PRA

		Are human health toxicity data available?		Can an exposure concentration be quantified?		Can human health risk be quantified?			
Constituent of Potential Concern	CAS Registry Number	Acute Toxicity? [a]	Chronic Toxicity? [b]	Emission Rate Available to Quantify Direct Exposure? [c]	Methods and Parameters Available to Quantify Indirect Exposure? [d]	Acute risk? [e]	Chronic Risk for Direct Exposure? [f]	Chronic Risk for Indirect Exposure? [g]	Is the constituent a quantitative COPC? [h]
Chloromethane	74-87-3	yes	yes	yes	yes	yes	yes	yes	yes
Chloropentafluoroethane	76-15-3	no	no	yes	yes	no	no	no	no
cis-1,2-Dichloroethene	156-59-2	yes	yes	no	no	no	no	no	no
cis-1,3-Dichloropropene	10061-01-5	yes	no	yes	yes	yes	no	no	yes
Cyanogen bromide	506-68-3	no	yes	no	no	no	no	no	no
Cyanogen chloride	506-77-4	yes	yes	no	no	no	no	no	no
Dichlorodifluoromethane	75-71-8	yes	yes	yes	yes	yes	yes	yes	yes
Dichlorofluoromethane	75-43-4	yes	no	yes	yes	yes	no	no	yes
Dichloromethane	75-09-2	yes	yes	yes	yes	yes	yes	yes	yes
Difluorodibromomethane	75-61-6	no	no	yes	yes	no	no	no	no
Hexafluoroacetone	684-16-2	yes	no	yes	yes	yes	no	no	yes
Iodomethane	74-88-4	yes	no	no	no	no	no	no	no
Methylene bromide	74-95-3	yes	yes	no	no	no	no	no	no
Pentachloroethane	76-01-7	yes	no	no	no	no	no	no	no
trans-1,2-Dichloroethylene	156-60-5	yes	yes	yes	yes	yes	yes	yes	yes
trans-1,3-Dichloropropene	10061-02-6	no	no	yes	yes	no	no	no	no
Trichloroacetic acid	76-03-9	yes	no	yes	yes	yes	no	no	yes
Trichlorofluoroethane	27154-33-2	no	no	yes	yes	no	no	no	no
Trichlorofluoromethane	75-69-4	yes	yes	yes	yes	yes	yes	yes	yes
Trifluorobromomethane	75-63-8	yes	no	yes	yes	yes	no	no	yes
Dioxin and Furan Compounds									
1,2,3,4,6,7,8-Heptachlorodibenzo(p)dioxin	35822-46-9	no	no*	yes	yes	no	yes	yes	yes
1,2,3,4,6,7,8-Heptachlorodibenzofuran	67562-39-4	no	no*	yes	yes	no	yes	yes	yes
1,2,3,4,7,8,9-Heptachlorodibenzofuran	55673-89-7	no	no*	yes	yes	no	yes	yes	yes
1,2,3,4,7,8-Hexachlorodibenzo(p)dioxin	39227-28-6	no	no*	yes	yes	no	yes	yes	yes
1,2,3,4,7,8-Hexachlorodibenzofuran	70648-26-9	yes	no*	yes	yes	yes	yes	yes	yes

Table D-1. Selection of Human Health COPCs for Inclusion in the Quantitative PRA

		Are human health toxicity data available?		Can an exposure concentration be quantified?		Can human health risk be quantified?			
Constituent of Potential Concern	CAS Registry Number	Acute Toxicity? [a]	Chronic Toxicity? [b]	Emission Rate Available to Quantify Direct Exposure? [c]	Methods and Parameters Available to Quantify Indirect Exposure? [d]	Acute risk? [e]	Chronic Risk for Direct Exposure? [f]	Chronic Risk for Indirect Exposure? [g]	Is the constituent a quantitative COPC? [h]
1,2,3,6,7,8-Hexachlorodibenzo(p)dioxin	57653-85-7	yes	no*	yes	yes	yes	yes	yes	yes
1,2,3,6,7,8-Hexachlorodibenzofuran	57117-44-9	yes	no*	yes	yes	yes	yes	yes	yes
1,2,3,7,8,9-Hexachlorodibenzo(p)dioxin	19408-74-3	no	no*	yes	yes	no	yes	yes	yes
1,2,3,7,8,9-Hexachlorodibenzofuran	72918-21-9	no	no*	yes	yes	no	yes	yes	yes
1,2,3,7,8-Pentachlorodibenzo(p)dioxin	40321-76-4	yes	no*	yes	yes	yes	yes	yes	yes
1,2,3,7,8-Pentachlorodibenzofuran	57117-41-6	no	no*	yes	yes	no	yes	yes	yes
2,3,4,6,7,8-Hexachlorodibenzofuran	60851-34-5	yes	no*	yes	yes	yes	yes	yes	yes
2,3,4,7,8-Pentachlorodibenzofuran	57117-31-4	yes	no*	yes	yes	yes	yes	yes	yes
2,3,7,8-Tetrachlorodibenzo(p)dioxin	1746-01-6	yes	yes	yes	yes	yes	yes	yes	yes
2,3,7,8-Tetrachlorodibenzofuran	51207-31-9	yes	no*	yes	yes	yes	yes	yes	yes
Dibenzofuran	132-64-9	no	no	yes	yes	no	no	no	no
Octachlorodibenzo(p)dioxin	3268-87-9	no	no*	yes	yes	no	yes	yes	yes
Octachlorodibenzofuran	39001-02-0	no	no*	yes	yes	no	yes	yes	yes
PCBs									
2,2',3,3',4,4',5- Heptachlorobiphenyl	35065-30-6	no	no	yes	yes	no	no	no	no
2,2',3,4,4',5,5'- Heptachlorobiphenyl	35065-29-3	no	no	yes	yes	no	no	no	no
2,3,3',4,4',5'- Hexachlorobiphenyl	69782-90-7	no	no*	yes	yes	no	yes	yes	yes
2,3,3',4,4',5- Hexachlorobiphenyl	38380-08-4	no	no*	yes	yes	no	yes	yes	yes
2,3,3',4,4',5,5'- Heptachlorobiphenyl	no cas #	no	no*	yes	yes	no	yes	yes	yes
2,3,3',4,4'-Pentachlorobiphenyl	32598-14-4	no	no*	yes	yes	no	yes	yes	yes
2,3,4,4',5- Pentachlorobiphenyl	74472-37-0	no	no*	yes	yes	no	yes	yes	yes
2',3,4,4',5- Pentachlorobiphenyl	no cas #	no	no*	yes	yes	no	yes	yes	yes
2,3',4,4',5- Pentachlorobiphenyl	31508-00-6	no	no*	yes	yes	no	yes	yes	yes
2,3',4,4',5,5'- Hexachlorobiphenyl	no cas #	no	no*	yes	yes	no	yes	yes	yes
3,3',4,4',5- Pentachlorobiphenyl	no cas #	no	no*	yes	yes	no	yes	yes	yes
3,3',4,4',5,5'- Hexachlorobiphenyl	32774-16-6	no	no*	yes	yes	no	yes	yes	yes

Table D-1. Selection of Human Health COPCs for Inclusion in the Quantitative PRA

		Are human health toxicity data available?		Can an exposure concentration be quantified?		Can human health risk be quantified?			
Constituent of Potential Concern	**CAS Registry Number**	**Acute Toxicity?** [a]	**Chronic Toxicity?** [b]	**Emission Rate Available to Quantify Direct Exposure?** [c]	**Methods and Parameters Available to Quantify Indirect Exposure?** [d]	**Acute risk?** [e]	**Chronic Risk for Direct Exposure?** [f]	**Chronic Risk for Indirect Exposure?** [g]	**Is the constituent a quantitative COPC?** [h]
3,3',4,4'-Tetrachlorobiphenyl	32598-13-3	no	no*	yes	yes	no	yes	yes	yes
3,4,4',5-Tetrachlorobiphenyl	70362-50-4	no	no*	yes	yes	no	yes	yes	yes
Polychlorinated biphenyls (PCBs)	1336-36-3	yes	yes	yes	yes	yes	yes	yes	yes
Phthalates									
Bis(2-ethylhexyl)phthalate (DEHP)	117-81-7	yes	yes	yes	yes	yes	yes	yes	yes
Butylbenzyl phthalate	85-68-7	yes	yes	yes	yes	yes	yes	yes	yes
Dibutyl phthalate	84-74-2	yes	yes	yes	yes	yes	yes	yes	yes
Diethyl phthalate	84-66-2	yes	yes	yes	yes	yes	yes	yes	yes
Dimethylphthalate	131-11-3	yes	no	no	no	no	no	no	no
n-Dioctyl phthalate	117-84-0	yes	yes	yes	yes	yes	yes	yes	yes
Light Polycyclic Aromatic Hydrocarbons									
2-Chloronapthalene	91-58-7	yes	yes	yes	yes	yes	yes	yes	yes
2-Methyl naphthalene	91-57-6	yes	no	no	no	no	no	no	no
5-Nitroacenaphthene	602-87-9	no	no	yes	yes	no	no	no	no
Acenaphthene	83-32-9	yes	yes	yes	yes	yes	yes	yes	yes
Acenaphthylene	208-96-8	yes	no	yes	yes	yes	no	no	yes
Anthracene	120-12-7	yes	yes	yes	yes	yes	yes	yes	yes
Fluorene	86-73-7	yes	yes	yes	yes	yes	yes	yes	yes
Indene	95-13-6	yes	no	yes	yes	yes	no	no	yes
Naphthalene	91-20-3	yes	yes	yes	yes	yes	yes	yes	yes
Phenanthrene	85-01-8	yes	no	yes	yes	yes	no	no	yes
Pyrene	129-00-0	yes	yes	yes	yes	yes	yes	yes	yes
Heavy Polycyclic Aromatic Hydrocarbons									
3-Methylcholanthrene	56-49-5	yes	no	yes	yes	yes	no	no	yes

Table D-1. Selection of Human Health COPCs for Inclusion in the Quantitative PRA

		Are human health toxicity data available?		Can an exposure concentration be quantified?		Can human health risk be quantified?			
Constituent of Potential Concern	CAS Registry Number	Acute Toxicity? [a]	Chronic Toxicity? [b]	Emission Rate Available to Quantify Direct Exposure? [c]	Methods and Parameters Available to Quantify Indirect Exposure? [d]	Acute risk? [e]	Chronic Risk for Direct Exposure? [f]	Chronic Risk for Indirect Exposure? [g]	Is the constituent a quantitative COPC? [h]
5-Methylchrysene	3697-24-3	no	no	yes	yes	no	no	no	no
Benzo(a)anthracene	56-55-3	yes	no*	yes	yes	yes	yes	yes	yes
Benzo(a)pyrene	50-32-8	yes	yes	yes	yes	yes	yes	yes	yes
Benzo(b)fluoranthene	205-99-2	no	no*	yes	yes	no	yes	yes	yes
Benzo(e)pyrene	192-97-2	no	no	no	no	no	no	no	no
Benzo(g,h,i)perylene	191-24-2	yes	no	yes	yes	yes	no	no	yes
Benzo(j)fluoranthene	205-82-3	no	no	yes	yes	no	no	no	no
Benzo(k)fluoranthene	207-08-9	no	no*	yes	yes	no	yes	yes	yes
Benzo[a,i]pyrene	191-30-0	no	no	yes	yes	no	no	no	no
Chrysene	218-01-9	yes	no*	yes	yes	yes	yes	yes	yes
Dibenz(a,h)anthracene	53-70-3	yes	no*	yes	yes	yes	yes	yes	yes
Dibenz[a,h]acridine	226-36-8	no	no	yes	yes	no	no	no	no
Dibenz[a,j]acridine	224-42-0	no	no	yes	yes	no	no	no	no
Dibenzo(a,e)fluoranthene	5385-75-1	no	no	no	no	no	no	no	no
Dibenzo(a,h)fluoranthene	no cas #	no	no	no	no	no	no	no	no
Dibenzo[a,e]pyrene	192-65-4	no	no	yes	yes	no	no	no	no
Dibenzo[a,h]pyrene	189-64-0	no	no	yes	yes	no	no	no	no
Dibenzo[a,i]pyrene	189-55-9	no	no	yes	yes	no	no	no	no
Fluoranthene	206-44-0	yes	yes	yes	yes	yes	yes	yes	yes
Hexachloronaphthalene	1335-87-1	yes	no	yes	yes	yes	no	no	yes
Indeno(1,2,3-cd)pyrene	193-39-5	no	no*	yes	yes	no	yes	yes	yes
Octachloronaphthalene	2234-13-1	yes	no	yes	yes	yes	no	no	yes
Pentachloronaphthalene	1321-64-8	no	no	yes	yes	no	no	no	no
Tetrachloronaphthalene	1335-88-2	no	no	yes	yes	no	no	no	no
Trichloronaphthalene	1321-65-9	no	no	yes	yes	no	no	no	no
Light Substituted Benzene Compounds									

Table D-1. Selection of Human Health COPCs for Inclusion in the Quantitative PRA

		Are human health toxicity data available?		Can an exposure concentration be quantified?		Can human health risk be quantified?			
Constituent of Potential Concern	CAS Registry Number	Acute Toxicity? [a]	Chronic Toxicity? [b]	Emission Rate Available to Quantify Direct Exposure? [c]	Methods and Parameters Available to Quantify Indirect Exposure? [d]	Acute risk? [e]	Chronic Risk for Direct Exposure? [f]	Chronic Risk for Indirect Exposure? [g]	Is the constituent a quantitative COPC? [h]
1,2,3-Trichlorobenzene	87-61-6	yes	no	no	no	no	no	no	no
1,2,4-Trichlorobenzene	120-82-1	yes	yes	yes	yes	yes	yes	yes	yes
1,2,4-Trimethyl benzene	95-63-6	yes	no	no	no	no	no	no	no
1,2-Dichlorobenzene	95-50-1	yes	yes	yes	yes	yes	yes	yes	yes
1,3,5-Trimethyl benzene	108-67-8	yes	no	no	no	no	no	no	no
1,3-Dichlorobenzene	541-73-1	yes	no	yes	yes	yes	no	no	yes
1,3-Dinitrobenzene	99-65-0	yes	yes	no	no	no	no	no	no
1,4-Dichlorobenzene	106-46-7	yes	yes	yes	yes	yes	yes	yes	yes
1,4-Dinitrobenzene	100-25-4	no	yes	yes	yes	no	yes	yes	yes
2,4,5-Trichlorophenol	95-95-4	yes	yes	yes	yes	yes	yes	yes	yes
2,4,6-Trichlorophenol	88-06-2	yes	yes	yes	yes	yes	yes	yes	yes
2,4-Dichlorophenol	120-83-2	yes	yes	yes	yes	yes	yes	yes	yes
2,4-Dimethylphenol	105-67-9	no	yes	no	no	no	no	no	no
2,4-Dinitrophenol	51-28-5	yes	yes	no	no	no	no	no	no
2,4-Dinitrotoluene	121-14-2	yes	yes	no	no	no	no	no	no
2,6-Dinitrotoluene	606-20-2	yes	yes	no	no	no	no	no	no
2-Chlorophenol	95-57-8	yes	yes	yes	yes	yes	yes	yes	yes
2-Chlorotoluene	95-49-8	yes	yes	yes	yes	yes	yes	yes	yes
2-Nitrophenol	88-75-5	no	no	yes	yes	no	no	no	no
4,6-Dinitro-o-cresol	534-52-1	yes	no	no	no	no	no	no	no
4-Chlorotoluene	106-43-4	yes	no	no	no	no	no	no	no
4-Nitrophenol	100-02-7	yes	no	no	no	no	no	no	no
alpha-Methylstyrene	98-83-9	no	yes	yes	yes	no	yes	yes	yes
Aniline	62-53-3	yes	yes	no	no	no	no	no	no
Benzotrichloride	98-07-7	yes	yes	no	no	no	no	no	no
Benzyl chloride	100-44-7	yes	yes	no	no	no	no	no	no
Bromobenzene	108-86-1	yes	no	no	no	no	no	no	no

Table D-1. Selection of Human Health COPCs for Inclusion in the Quantitative PRA

		Are human health toxicity data available?		Can an exposure concentration be quantified?		Can human health risk be quantified?			
Constituent of Potential Concern	**CAS Registry Number**	**Acute Toxicity? [a]**	**Chronic Toxicity? [b]**	**Emission Rate Available to Quantify Direct Exposure? [c]**	**Methods and Parameters Available to Quantify Indirect Exposure? [d]**	**Acute risk? [e]**	**Chronic Risk for Direct Exposure? [f]**	**Chronic Risk for Indirect Exposure? [g]**	**Is the constituent a quantitative COPC? [h]**
Chlorobenzene	108-90-7	yes	yes	yes	yes	yes	yes	yes	yes
Cumene	98-82-8	yes	yes	yes	yes	yes	yes	yes	yes
m-Cresol	108-39-4	no	yes	yes	yes	no	yes	yes	yes
n-Butyl benzene	104-51-8	yes	no	no	no	no	no	no	no
Nitrobenzene	98-95-3	yes	yes	yes	yes	yes	yes	yes	yes
n-Propyl benzene	103-65-1	yes	no	no	no	no	no	no	no
o-Cresol	95-48-7	no	yes	yes	yes	no	yes	yes	yes
o-Dinitrobenzene	528-29-0	no	yes	no	no	no	no	no	no
o-Nitroaniline	88-74-4	no	yes	no	no	no	no	no	no
o-Toluidine	95-53-4	yes	yes	no	no	no	no	no	no
p-Chloroaniline	106-47-8	yes	yes	no	no	no	no	no	no
p-Cresol	106-44-5	no	yes	no	no	no	no	no	no
Phenol	108-95-2	yes	yes	yes	yes	yes	yes	yes	yes
p-Nitrochlorobenzene	100-00-5	yes	no	yes	yes	yes	no	no	yes
p-Toluidine	106-49-0	no	yes	no	no	no	no	no	no
sec-Butyl benzene	135-98-8	yes	no	no	no	no	no	no	no
tert-Butyl benzene	98-06-6	yes	no	no	no	no	no	no	no
Toluene-2,6-diamine	823-40-5	no	yes	no	no	no	no	no	no
Trimethyl benzene	25551-13-7	no	no	yes	yes	no	no	no	no
Other Light Semivolatile Compounds									
1,1`-Biphenyl	92-52-4	yes	yes	yes	yes	yes	yes	yes	yes
1,1-Dimethylhydrazine	57-14-7	yes	no	yes	yes	yes	no	no	yes
1,2-Dimethylhydrazine	540-73-8	yes	no	no	no	no	no	no	no
1,2-Diphenylhydrazine	122-66-7	yes	yes	no	no	no	no	no	no
1,3-Propane sultone	1120-71-4	yes	no	no	no	no	no	no	no
2,4-Toluene diisocyante	584-84-9	yes	no	no	no	no	no	no	no

Table D-1. Selection of Human Health COPCs for Inclusion in the Quantitative PRA

		Are human health toxicity data available?		Can an exposure concentration be quantified?		Can human health risk be quantified?			
Constituent of Potential Concern	CAS Registry Number	Acute Toxicity? [a]	Chronic Toxicity? [b]	Emission Rate Available to Quantify Direct Exposure? [c]	Methods and Parameters Available to Quantify Indirect Exposure? [d]	Acute risk? [e]	Chronic Risk for Direct Exposure? [f]	Chronic Risk for Indirect Exposure? [g]	Is the constituent a quantitative COPC? [h]
2-Chloroacetophenone	532-27-4	no	yes	no	no	no	no	no	no
2-Propenoic acid	79-10-7	yes	yes	yes	yes	yes	yes	yes	yes
4,4-Methylenedianiline	101-77-9	yes	no	no	no	no	no	no	no
Acetophenone	98-86-2	yes	yes	yes	yes	yes	yes	yes	yes
Benzoic acid	65-85-0	yes	yes	no	no	no	no	no	no
Bis(2-chloroethoxy)methane	111-91-1	no	no	no	no	no	no	no	no
Bis(2-chloroethyl) ether	111-44-4	yes	yes	no	no	no	no	no	no
Chlorocyclopentadiene	41851-50-7	no	no	no	no	no	no	no	no
Cyclohexanol	108-93-0	no	no	yes	yes	no	no	no	no
Dichloroisopropyl ether	108-60-1	yes	yes	no	no	no	no	no	no
Dichloromethyl ether	542-88-1	yes	yes	yes	yes	yes	yes	yes	yes
Dichloropentadiene	no cas #	no	no	no	no	no	no	no	no
Dimethyl sulfate	77-78-1	yes	no	no	no	no	no	no	no
Dimethylaniline	121-69-7	no	yes	yes	yes	no	yes	yes	yes
Di-n-Propylnitrosamine	621-64-7	yes	yes	yes	yes	yes	yes	yes	yes
Diphenyl ether	101-84-8	no	no	yes	yes	no	no	no	no
Epichlorohydrin	106-89-8	yes	yes	no	no	no	no	no	no
Ethyl Carbamate (urethane)	51-79-6	no	no	no	no	no	no	no	no
Ethyl methanesulfonate	62-50-0	no	no	no	no	no	no	no	no
Ethylene dibromide	106-93-4	yes	yes	yes	yes	yes	yes	yes	yes
Ethylene glycol	107-21-1	yes	yes	no	no	no	no	no	no
Ethylene glycol monobutyl ether	111-76-2	yes	yes	yes	yes	yes	yes	yes	yes
Ethylene glycol monoethyl ether acetate	111-15-9	yes	yes	no	no	no	no	no	no
Ethylene thiourea	96-45-7	yes	yes	no	no	no	no	no	no
Furfural	98-01-1	yes	yes	no	no	no	no	no	no
Maleic hydrazide	123-33-1	no	yes	no	no	no	no	no	no
Malononitrile	109-77-3	no	yes	no	no	no	no	no	no

Table D-1. Selection of Human Health COPCs for Inclusion in the Quantitative PRA

		Are human health toxicity data available?		Can an exposure concentration be quantified?		Can human health risk be quantified?			
Constituent of Potential Concern	**CAS Registry Number**	**Acute Toxicity?** [a]	**Chronic Toxicity?** [b]	**Emission Rate Available to Quantify Direct Exposure?** [c]	**Methods and Parameters Available to Quantify Indirect Exposure?** [d]	**Acute risk?** [e]	**Chronic Risk for Direct Exposure?** [f]	**Chronic Risk for Indirect Exposure?** [g]	**Is the constituent a quantitative COPC?** [h]
Methyl styrene (mixed isomers)	25013-15-4	no	yes	no	no	no	no	no	no
Methylhydrazine	60-34-4	yes	no	yes	yes	yes	no	no	yes
N,N-Diphenylamine	122-39-4	yes	yes	yes	yes	yes	yes	yes	yes
Nitric acid, propyl ester	627-13-4	no	no	yes	yes	no	no	no	no
N-Nitrosodi-n-butylamine	924-16-3	no	yes	no	no	no	no	no	no
N-Nitrosomorpholine	59-89-2	yes	no	yes	yes	yes	no	no	yes
N-Nitroso-N,N-dimethylamine	62-75-9	yes	yes	yes	yes	yes	yes	yes	yes
o-Anisidine	90-04-0	yes	no	no	no	no	no	no	no
Oxalic acid	144-62-7	yes	no	yes	yes	yes	no	no	yes
Phthalic anhydride	85-44-9	yes	yes	no	no	no	no	no	no
p-Phthalic acid	100-21-0	no	yes	yes	yes	no	yes	yes	yes
Pyridine	110-86-1	yes	yes	yes	yes	yes	yes	yes	yes
Quinoline	91-22-5	yes	yes	yes	yes	yes	yes	yes	yes
Quinone	106-51-4	yes	no	no	no	no	no	no	no
Safrole	94-59-7	no	no	no	no	no	no	no	no
Tetrahydrofuran	109-99-9	yes	no	yes	yes	yes	no	no	yes
Other Heavy Semivolatile Compounds									
1,2,4,5-Tetrachlorobenzene	95-94-3	yes	yes	no	no	no	no	no	no
1,3,5-Trinitrobenzene	99-35-4	yes	yes	no	no	no	no	no	no
2,6-Bis(tert-butyl)-4-methylphenol	128-37-0	no	no	yes	yes	no	no	no	no
2-Cyclohexyl-4,6-dinitrophenol	131-89-5	no	yes	no	no	no	no	no	no
2-sec-Butyl-4,6-dinitrophenol	88-85-7	yes	yes	yes	yes	yes	yes	yes	yes
3,3-Dichlorobenzidine	91-94-1	yes	yes	no	no	no	no	no	no
3,3'-Dimethoxybenzidine	119-90-4	yes	yes	no	no	no	no	no	no
4-Bromophenylphenyl ether	101-55-3	no	no	yes	yes	no	no	no	no
Ammonium perfluorooctanoate	3825-26-1	no	no	yes	yes	no	no	no	no

Table D-1. Selection of Human Health COPCs for Inclusion in the Quantitative PRA

		Are human health toxicity data available?		Can an exposure concentration be quantified?		Can human health risk be quantified?			
Constituent of Potential Concern	CAS Registry Number	Acute Toxicity? [a]	Chronic Toxicity? [b]	Emission Rate Available to Quantify Direct Exposure? [c]	Methods and Parameters Available to Quantify Indirect Exposure? [d]	Acute risk? [e]	Chronic Risk for Direct Exposure? [f]	Chronic Risk for Indirect Exposure? [g]	Is the constituent a quantitative COPC? [h]
Azobenzene	103-33-3	no	yes	no	no	no	no	no	no
Bis(3-tert-butyl-4-hydroxy-6-methyl-phenyl)sulf	96-69-5	no	no	yes	yes	no	no	no	no
Captan	133-06-2	yes	yes	no	no	no	no	no	no
Chlorobenzilate	510-15-6	yes	yes	no	no	no	no	no	no
Dibutylphosphate	107-66-4	yes	no	yes	yes	yes	no	no	yes
Dimethyl aminoazobenzene	60-11-7	yes	no	no	no	no	no	no	no
Hexachlorobenzene	118-74-1	yes	yes	yes	yes	yes	yes	yes	yes
Hexachlorobutadiene	87-68-3	yes	yes	yes	yes	yes	yes	yes	yes
Hexachlorocyclopentadiene	77-47-4	yes	yes	no	no	no	no	no	no
Hexachloroethane	67-72-1	yes	yes	yes	yes	yes	yes	yes	yes
Hexachlorophene	70-30-4	yes	yes	no	no	no	no	no	no
Hexamethylene-1,5-diisocyanate	822-06-0	yes	yes	no	no	no	no	no	no
Mirex	2385-85-5	yes	yes	yes	yes	yes	yes	yes	yes
Nitrofen	1836-75-5	no	no	yes	yes	no	no	no	no
Pentachlorobenzene	608-93-5	yes	yes	no	no	no	no	no	no
Pentachloronitrobenzene	82-68-8	yes	yes	yes	yes	yes	yes	yes	yes
Pentachlorophenol	87-86-5	yes	yes	yes	yes	yes	yes	yes	yes
Picric acid	88-89-1	yes	no	yes	yes	yes	no	no	yes
Pronamide	23950-58-5	no	yes	no	no	no	no	no	no
Strychnine	57-24-9	yes	yes	no	no	no	no	no	no
Terphenyls	26140-60-3	yes	no	yes	yes	yes	no	no	yes
Tributyl phosphate	126-73-8	yes	no	yes	yes	yes	no	no	yes
Trifluralin	1582-09-8	yes	yes	yes	yes	yes	yes	yes	yes
Triphenylamine	603-34-9	no	no	yes	yes	no	no	no	no
Herbicides and Organochlorinated Pesticides									
2,4,5-T	93-76-5	yes	yes	yes	yes	yes	yes	yes	yes

Table D-1. Selection of Human Health COPCs for Inclusion in the Quantitative PRA

		Are human health toxicity data available?		Can an exposure concentration be quantified?		Can human health risk be quantified?			
Constituent of Potential Concern	CAS Registry Number	Acute Toxicity? [a]	Chronic Toxicity? [b]	Emission Rate Available to Quantify Direct Exposure? [c]	Methods and Parameters Available to Quantify Indirect Exposure? [d]	Acute risk? [e]	Chronic Risk for Direct Exposure? [f]	Chronic Risk for Indirect Exposure? [g]	Is the constituent a quantitative COPC? [h]
2,4-D and esters	94-75-7	yes	yes	yes	yes	yes	yes	yes	yes
4,4-DDD	72-54-8	yes	yes	yes	yes	yes	yes	yes	yes
4,4-DDE	72-55-9	yes	yes	yes	yes	yes	yes	yes	yes
4,4-DDT	50-29-3	yes	yes	yes	yes	yes	yes	yes	yes
Aldrin	309-00-2	yes	yes	yes	yes	yes	yes	yes	yes
alpha-BHC	319-84-6	yes	yes	yes	yes	yes	yes	yes	yes
beta-BHC	319-85-7	yes	yes	yes	yes	yes	yes	yes	yes
Chlordane	57-74-9	yes	yes	no	no	no	no	no	no
Delta-BHC	319-86-8	no	no	yes	yes	no	no	no	no
Dieldrin	60-57-1	yes	yes	yes	yes	yes	yes	yes	yes
Endothall	145-73-3	no	yes	no	no	no	no	no	no
Endrin	72-20-8	yes	yes	yes	yes	yes	yes	yes	yes
gamma-BHC (Lindane)	58-89-9	yes	yes	yes	yes	yes	yes	yes	yes
Heptachlor	76-44-8	yes	yes	yes	yes	yes	yes	yes	yes
Isodrin	465-73-6	no	no	yes	yes	no	no	no	no
Methoxychlor	72-43-5	yes	yes	yes	yes	yes	yes	yes	yes
Silvex (2,4,5-TP)	93-72-1	yes	yes	yes	yes	yes	yes	yes	yes
Toxaphene	8001-35-2	yes	yes	yes	yes	yes	yes	yes	yes
Inorganics									
Metals									
Aluminum	7429-90-5	yes	no	yes	yes	yes	no	no	yes
Antimony	7440-36-0	yes	yes	yes	yes	yes	yes	yes	yes
Arsenic	7440-38-2	yes	yes	yes	yes	yes	yes	yes	yes
Barium	7440-39-3	yes	yes	yes	yes	yes	yes	yes	yes
Beryllium	7440-41-7	yes	yes	yes	yes	yes	yes	yes	yes
Bismuth	7440-69-9	yes	no	yes	yes	yes	no	no	yes

Table D-1. Selection of Human Health COPCs for Inclusion in the Quantitative PRA

		Are human health toxicity data available?		Can an exposure concentration be quantified?		Can human health risk be quantified?			
Constituent of Potential Concern	CAS Registry Number	Acute Toxicity? [a]	Chronic Toxicity? [b]	Emission Rate Available to Quantify Direct Exposure? [c]	Methods and Parameters Available to Quantify Indirect Exposure? [d]	Acute risk? [e]	Chronic Risk for Direct Exposure? [f]	Chronic Risk for Indirect Exposure? [g]	Is the constituent a quantitative COPC? [h]
Boron	7440-42-8	yes	yes	yes	yes	yes	yes	yes	yes
Cadmium	7440-43-9	yes	yes	yes	yes	yes	yes	yes	yes
Calcium	7440-70-2	yes	no	yes	yes	yes	no	no	yes
Chromium (and VI)	18540-29-9	yes	yes	yes	yes	yes	yes	yes	yes
Cobalt	7440-48-4	yes	no	yes	yes	yes	no	no	yes
Copper	7440-50-8	yes	no	yes	yes	yes	no	no	yes
Iron	7439-89-6	yes	no	yes	yes	yes	no	no	yes
Lead	7439-92-1	yes	no**	yes	yes	yes	yes	yes	yes
Lithium	7439-93-2	yes	no	yes	yes	yes	no	no	yes
Magnesium	7439-95-4	yes	no	yes	yes	yes	no	no	yes
Manganese	7439-96-5	yes	yes	yes	yes	yes	yes	yes	yes
Mercury	7439-97-6	yes	no**	yes	yes	yes	yes	yes	yes
Molybdenum	7439-98-7	yes	yes	yes	yes	yes	yes	yes	yes
Nickel	7440-02-0	yes	yes	yes	yes	yes	yes	yes	yes
Potassium	7440-09-7	yes	no	yes	yes	yes	no	no	yes
Rhodium	7440-16-6	yes	no	yes	yes	yes	no	no	yes
Selenium	7782-49-2	yes	yes	yes	yes	yes	yes	yes	yes
Silicon	7440-21-3	yes	no	yes	yes	yes	no	no	yes
Silver	7440-22-4	yes	yes	yes	yes	yes	yes	yes	yes
Sodium	7440-23-5	yes	no	yes	yes	yes	no	no	yes
Strontium	7440-24-6	yes	yes	no	no	no	no	no	no
Tantalum	7440-25-7	no	no	yes	yes	no	no	no	no
Thallium	7440-28-0	yes	no	yes	yes	yes	no	no	yes
Tin	7440-31-5	yes	yes	yes	yes	yes	yes	yes	yes
Tungsten	7440-33-7	yes	no	yes	yes	yes	no	no	yes
Uranium	7440-61-1	yes	yes	yes	yes	yes	yes	yes	yes
Vanadium	7440-62-2	yes	yes	yes	yes	yes	yes	yes	yes

Table D-1. Selection of Human Health COPCs for Inclusion in the Quantitative PRA

		Are human health toxicity data available?		Can an exposure concentration be quantified?		Can human health risk be quantified?			
Constituent of Potential Concern	CAS Registry Number	Acute Toxicity? [a]	Chronic Toxicity? [b]	Emission Rate Available to Quantify Direct Exposure? [c]	Methods and Parameters Available to Quantify Indirect Exposure? [d]	Acute risk? [e]	Chronic Risk for Direct Exposure? [f]	Chronic Risk for Indirect Exposure? [g]	Is the constituent a quantitative COPC? [h]
Yttrium	7440-65-5	yes	no	yes	yes	yes	no	no	yes
Zinc	7440-66-6	yes	yes	yes	yes	yes	yes	yes	yes
Zirconium	7440-67-7	yes	no	yes	yes	yes	no	no	yes
Non-metals and Anions									
Ammonia/Ammonium	7664-41-7	yes	yes	yes	yes	yes	yes	yes	yes
Bromide	24959-67-9	no	no	yes	yes	no	no	no	no
Chloride	16887-00-6	no	no	yes	yes	no	no	no	no
Cyanide	57-12-5	yes	yes	yes	yes	yes	yes	yes	yes
Fluoride	16984-48-8	yes	yes	yes	yes	yes	yes	yes	yes
Hydroxide	14280-30-9	no	no	yes	yes	no	no	no	no
Iodine	7553-56-2	yes	no	yes	yes	yes	no	no	yes
Nitrate	14797-55-8	yes	yes	yes	yes	yes	yes	yes	yes
Nitrite	14797-65-0	no	yes	yes	yes	no	yes	yes	yes
Phosphate	14265-44-2	no	no	yes	yes	no	no	no	no
Phosphorus	7723-14-0	yes	no	yes	yes	yes	no	no	yes
Sulfate	14808-79-8	yes	no	yes	yes	yes	no	no	yes
Total Sulfur	63705-05-5	yes	no	yes	yes	yes	no	no	yes
Criteria Pollutants									
Carbon dioxide	124-38-9	yes	no	yes	yes	yes	no	no	yes
Nitrogen dioxide	10102-44-0	yes	no	yes	yes	yes	no	no	yes
Ozone	10028-15-6	yes	no	yes	yes	yes	no	no	yes
Particulate matter	no cas #	no	no***	yes	yes	no	yes	yes	yes
Sulfur dioxide	7446-09-5	yes	no	yes	yes	yes	no	no	yes

Table D-1. Selection of Human Health COPCs for Inclusion in the Quantitative PRA

		Are human health toxicity data available?		Can an exposure concentration be quantified?		Can human health risk be quantified?			
Constituent of Potential Concern	CAS Registry Number	Acute Toxicity? [a]	Chronic Toxicity? [b]	Emission Rate Available to Quantify Direct Exposure? [c]	Methods and Parameters Available to Quantify Indirect Exposure? [d]	Acute risk? [e]	Chronic Risk for Direct Exposure? [f]	Chronic Risk for Indirect Exposure? [g]	Is the constituent a quantitative COPC? [h]

[a] Acute inhalation exposure criteria appear in Table 4-4. If an acute inhalation exposure criteria value is available, a value of "yes" appears in this column.

[b] Chronic toxicity data (reference doses and slope factors) appear in Table 4-1 for organics and in Table 4-2 for inorganics. If a chronic toxicity value is available, a value of "yes" appears in this column.

[c] Is an emission rate estimate available to quantify direct exposure (i.e., air concentrations)? If so, then a value of "yes" appears in this column.

d Is an emission rate estimate available and are all chemical-specific parameter values available so that indirect exposures (e.g., soil, plant, animal, and water concentrations) can be modeled? If so, then a value of "yes" appears in this column.

(e.g., soil, plant, animal, and water concentrations) can be modeled? If so, then a value of "yes" appears in this column.

[e] Can acute inhalation risk be quantified? If acute toxicity values are available ("yes" appears in column 3) and direct exposures can be quantified ("yes" appears in column 5) then acute risk can be quantified and a value of "yes" appears in this column.

[f] Can chronic risk for direct exposure (i.e., from the inhalation of air pathway) be quantified? If chronic toxicity values are available ("yes" appears in column 4) and direct exposures can be quantified ("yes" appears in column 5) then chronic risk for direct exposure can be quantified and a value of "yes" appears in this column.

[g] Can chronic risk for indirect exposure (e.g., from exposures to soil, plants, animals, or water) be quantified? If chronic toxicity values are available ("yes" appears in column 4) and indirect exposures can be quantified ("yes" appears in column 6) then chronic risk for indirect exposure can be quantified and a value of "yes" appears in this column.

[h] The constituent is a quantitative COPC if acute inhalation can be quantified ("yes" appears in column 7) or chronic risk for direct exposure can be quantified ("yes" appears in column 8) or chronic risk for indirect exposure can be quantified ("yes" appears in column 9); in this case a value of "yes" appears in this column.

* Even though the COPC has no toxicity data, the COPC can be evaluated by using toxicity equivalency factors (TEFs).

** Even though the COPC has no toxicity data, the COPC can be evaluated by comparing its concentrations against USEPA Region 6 Health-Based Target Levels.

*** Even though the COPC has no toxicity data, the COPC can be evaluated by comparing its modeled annual average concentration to the average National Ambient Air Quality Standard (NAAQS) for PM_{10} of 50 ug/m^3.

Table D-2. Selection of Human Health ROPCs for Inclusion in the Quantitative PRA

		Are human health toxicity data available?	Can an exposure concentration be quantified?		Can human health risk be quantified?		
Constituent of Potential Concern	CAS Registry Number	Chronic Toxicity? [a]	Emission Rate Available to Quantify Direct Exposure? [b]	Methods and Parameters Available to Quantify Indirect Exposure? [c]	Chronic Risk for Direct Exposure? [d]	Chronic Risk for Indirect Exposure? [e]	Is the constituent a quantitative ROPC? [f]
Actinium-227	14952-40-0	yes	no	no	no	no	no
Americium-241	14596-10-2	yes	no	no	no	no	no
Americium-243	14993-75-0	yes	no	no	no	no	no
Antimony-125	14234-35-6	yes	no	no	no	no	no
Barium-137	13981-97-0	yes	yes	yes	yes	yes	yes
Cadmium-113	no cas #	yes	no	no	no	no	no
Carbon-14	14762-75-5	yes	yes	yes	yes	yes	yes
Cesium-134	13967-70-9	yes	yes	yes	yes	yes	yes
Cesium-137	10045-97-3	yes	no	no	no	no	no
Cobalt-60	10198-40-0	yes	yes	yes	yes	yes	yes
Curium-242	15510-73-3	yes	no	no	no	no	no
Curium-243	15757-87-6	yes	no	no	no	no	no
Curium-244	13981-15-2	yes	no	no	no	no	no
Europium-152	14683-23-9	yes	no	no	no	no	no
Europium-154	15585-10-1	yes	yes	yes	yes	yes	yes
Europium-155	14391-16-3	yes	yes	yes	yes	yes	yes
Iodine-129	15046-84-1	yes	yes	yes	yes	yes	yes
Neptunium-237	13994-20-2	yes	yes	yes	yes	yes	yes
Nickel-59	14336-70-0	yes	no	no	no	no	no
Nickel-63	13981-37-8	yes	no	no	no	no	no
Niobium-93	7440-03-1	yes	no	no	no	no	no
Plutonium-238	13981-16-3	yes	yes	yes	yes	yes	yes
Plutonium-239	15117-48-3	yes	yes	yes	yes	yes	yes
Plutonium-240	14119-33-6	yes	yes	yes	yes	yes	yes
Plutonium-241	14119-32-5	yes	yes	yes	yes	yes	yes
Plutonium-242	13982-10-0	yes	no	no	no	no	no

Table D-2. Selection of Human Health ROPCs for Inclusion in the Quantitative PRA

		Are human health toxicity data available?	Can an exposure concentration be quantified?		Can human health risk be quantified?		
Constituent of Potential Concern	CAS Registry Number	Chronic Toxicity? [a]	Emission Rate Available to Quantify Direct Exposure? [b]	Methods and Parameters Available to Quantify Indirect Exposure? [c]	Chronic Risk for Direct Exposure? [d]	Chronic Risk for Indirect Exposure? [e]	Is the constituent a quantitative ROPC? [f]
Protactinium-231	14331-85-2	yes	no	no	no	no	no
Radium-226	13982-63-3	yes	no	no	no	no	no
Radium-228	15262-20-1	yes	no	no	no	no	no
Ruthenium-106	13967-48-1	yes	no	no	no	no	no
Samarium-151	15715-94-3	yes	no	no	no	no	no
Selenium-79	no cas #	yes	no	no	no	no	no
Strontium-90	10098-97-2	yes	yes	yes	yes	yes	yes
Technetium-99	14133-76-7	yes	yes	yes	yes	yes	yes
Thorium-229	15594-54-4	yes	no	no	no	no	no
Thorium-232	7440-29-1	yes	no	no	no	no	no
Tin-126	15832-50-5	yes	no	no	no	no	no
Tritium	10028-17-8	yes	yes	yes	yes	yes	yes
Uranium-232	14158-29-3	yes	no	no	no	no	no
Uranium-233	13968-55-3	yes	no	no	no	no	no
Uranium-234	13966-29-5	yes	no	no	no	no	no
Uranium-235	15117-96-1	yes	yes	yes	yes	yes	yes
Uranium-236	13982-70-2	yes	yes	yes	yes	yes	yes
Uranium-238	7440-61-1	yes	no	no	no	no	no
Yttrium-90	10098-91-6	yes	yes	yes	yes	yes	yes
Zirconium-93	15751-77-6	yes	no	no	no	no	no

nd = not determined at this time

[a] Chronic toxicity data (slope factors) appear in Table 4-3 for radionuclides. If a chronic toxicity value is available, a value of "yes" appears in this column.

[b] Is an emission rate estimate available to quantify direct exposure (i.e., air concentrations)? If so, then a value of "yes"

Table D-2. Selection of Human Health ROPCs for Inclusion in the Quantitative PRA

		Are human health toxicity data available?	Can an exposure concentration be quantified?		Can human health risk be quantified?		
Constituent of Potential Concern	CAS Registry Number	Chronic Toxicity? [a]	Emission Rate Available to Quantify Direct Exposure? [b]	Methods and Parameters Available to Quantify Indirect Exposure? [c]	Chronic Risk for Direct Exposure? [d]	Chronic Risk for Indirect Exposure? [e]	Is the constituent a quantitative ROPC? [f]

appears in this column.

[c] Is an emission rate estimate available t and are all chemical-specific parameter values available so that indirect exposures (e.g., soil, plant, animal, and water concentrations) can be modeled? If so, then a value of "yes" appears in this column.

[d] Can chronic risk for direct exposure (i.e., from the inhalation of air and external exposure to air pathways) be quantified? If chronic toxicity values are available ("yes" appears in column 3) and direct exposures can be quantified ("yes" appears in column 4) then chronic risk for direct exposure can be quantified and a value of "yes" appears in this column.

[e] Can chronic risk for indirect exposure (e.g., from exposures to soil, plants, animals, or water) be quantified? If chronic toxicity values are available ("yes" appears in column 3) and indirect exposures can be quantified ("yes" appears in column 5) then chronic risk for indirect exposure can be quantified and a value of "yes" appears in this column.

[f] The constituent is a quantitative ROPC chronic risk for direct exposure can be quantified ("yes" appears in column 6) or chronic risk for indirect exposure can be quantified ("yes" appears in column 7); in this case a value of "yes" appears in this column.

Table D-3. Summary of Selection of COPCs and ROPCs for Inclusion in the Quantitative Human Health PRA

	Number that can be evaluated quantitatively	Number that cannot be evaluated quantitatively	Number that cannot yet be determined	Total
Organic COPCs	224	146	0	370
Inorganic COPCs	48	6	0	54
ROPCs	18	28	0	46
Total	290	180	0	470

Table D-4. Selection of Ecological COPCs for Inclusion in the Quantitative PRA

		Are there ecological toxicity data available?			concentration be quantified?		Can ecological risk be quantified?			
Constituent of Potential Concern	CAS Registry Number	Direct Contact?[a]	Ingestion?[b]	Inhalation?[c]	Emission Rate Available to Quantify Direct Exposure?[d]	Emission Rate Available to Quantify Indirect Exposure?[e]	Direct Contact?[f]	Ingestion?[g]	Inhalation?[h]	Is the constituent a quantitative COPC?[i]
Organics										
Aromatic Halogenated Hydrocarbons										
2,3,4,6-Tetrachlorophenol	58-90-2	yes	yes	no	yes	yes	yes	yes	no	yes
4-Chloro-3-methylphenol	59-50-7	yes	no	no	yes	yes	yes	no	no	yes
Aromatic Nonhalogenated Hydrocarbons										
2-Nitrotoluene	88-72-2	yes	no	no	yes	yes	yes	no	no	yes
4-Nitrobiphenyl	92-93-3	no	no	no	yes	yes	no	no	no	no
Benzaldehyde	100-52-7	yes	yes	yes	no	no	no	no	no	no
Benzene	71-43-2	yes	yes	yes	yes	yes	yes	yes	yes	yes
Benzyl alcohol	100-51-6	yes	no	no	no	no	no	no	no	no
Ethyl benzene	100-41-4	yes	yes	yes	yes	yes	yes	yes	yes	yes
m-Xylene	108-38-3	yes	no	yes	yes	yes	yes	no	yes	yes
o-Xylene	95-47-6	yes	no	yes	yes	yes	yes	no	yes	yes
p-Xylene	106-42-3	yes	no	yes	yes	yes	yes	no	yes	yes
Styrene	100-42-5	yes	yes	yes	yes	yes	yes	yes	yes	yes
Toluene	108-88-3	yes	yes	yes	yes	yes	yes	yes	yes	yes
Non-aromatic Nonhalogenated Hydrocarbons										
1,2-Epoxybutane	106-88-7	no	no	yes	yes	yes	no	no	yes	yes
1,3-Butadiene	106-99-0	no	no	yes	yes	yes	no	no	yes	yes
1,4-Dioxane	123-91-1	yes	yes	yes	yes	yes	yes	yes	yes	yes
1-Methylpropyl alcohol	78-92-2	no	no	yes	yes	yes	no	no	yes	yes
1-Nitropropane	108-03-2	no	no	no	yes	yes	no	no	no	no
2,2,4-Trimethylpentane	540-84-1	no	no	no	yes	yes	no	no	no	no
2-Butanone	78-93-3	yes	yes	yes	yes	yes	yes	yes	yes	yes
2-Butenaldehyde (2-Butenal)	4170-30-3	no	no	yes	yes	yes	no	no	yes	yes
2-Ethoxyethanol	110-80-5	no	no	yes	no	no	no	no	no	no

Table D-4. Selection of Ecological COPCs for Inclusion in the Quantitative PRA

		Are there ecological toxicity data available?			concentration be quantified?		Can ecological risk be quantified?			
Constituent of Potential Concern	CAS Registry Number	Direct Contact?[a]	Ingestion?[b]	Inhalation?[c]	Emission Rate Available to Quantify Direct Exposure?[d]	Emission Rate Available to Quantify Indirect Exposure?[e]	Direct Contact?[f]	Ingestion?[g]	Inhalation?[h]	Is the constituent a quantitative COPC?[i]
2-Heptanone	110-43-0	no	no	yes	yes	yes	no	no	yes	yes
2-Hexanone	591-78-6	yes	no	yes	yes	yes	yes	no	yes	yes
2-Methoxyethanol	109-86-4	no	no	yes	no	no	no	no	no	no
2-Methyl-2-propanol	75-65-0	no	no	yes	yes	yes	no	no	yes	yes
2-Methyl-2-propenenitrile	126-98-7	no	yes	yes	yes	yes	no	yes	yes	yes
2-Methylaziridine	75-55-8	no	no	no	yes	yes	no	no	no	no
2-Methylpropyl alcohol	78-83-1	no	yes	no	yes	yes	no	yes	no	yes
2-Pentanone	107-87-9	no	no	yes	yes	yes	no	no	yes	yes
2-Propanone (Acetone)	67-64-1	yes	yes	yes	yes	yes	yes	yes	yes	yes
2-Propene-1-ol	107-18-6	no	yes	no	yes	yes	no	yes	no	yes
2-Propyl alcohol	67-63-0	no	no	yes	yes	yes	no	no	yes	yes
3-Heptanone	106-35-4	no	no	yes	yes	yes	no	no	yes	yes
3-Methyl-1-butanol	123-51-3	no	no	no	yes	yes	no	no	no	no
3-Methyl-2-butanone	563-80-4	no	no	yes	yes	yes	no	no	yes	yes
3-Pentanone	96-22-0	no	no	yes	yes	yes	no	no	yes	yes
4-Heptanone	123-19-3	no	no	yes	yes	yes	no	no	yes	yes
4-Methyl-2-pentanone	108-10-1	yes	yes	yes	yes	yes	yes	yes	yes	yes
4-Methyl-3-penten-2-one	141-79-7	no	no	no	yes	yes	no	no	no	no
5-Methyl-2-hexanone	110-12-3	no	no	yes	yes	yes	no	no	yes	yes
Acetaldehyde	75-07-0	no	no	yes	yes	yes	no	no	yes	yes
Acetamide	60-35-5	no	no	no	yes	yes	no	no	no	no
Acetic acid	64-19-7	no	no	yes	yes	yes	no	no	yes	yes
Acetic acid ethyl ester	141-78-6	no	yes	yes	yes	yes	no	yes	yes	yes
Acetic acid n-butyl ester	123-86-4	no	no	yes	yes	yes	no	no	yes	yes
Acetonitrile	75-05-8	no	no	yes	yes	yes	no	no	yes	yes
Acrolein	107-02-8	no	no	yes	yes	yes	no	no	yes	yes
Acrylonitrile	107-13-1	yes	yes	yes	yes	yes	yes	yes	yes	yes
Bis(isopropyl)ether	108-20-3	no	no	no	yes	yes	no	no	no	no

Table D-4. Selection of Ecological COPCs for Inclusion in the Quantitative PRA

		Are there ecological toxicity data available?			concentration be quantified?		Can ecological risk be quantified?			
Constituent of Potential Concern	CAS Registry Number	Direct Contact?[a]	Ingestion?[b]	Inhalation?[c]	Emission Rate Available to Quantify Direct Exposure?[d]	Emission Rate Available to Quantify Indirect Exposure?[e]	Direct Contact?[f]	Ingestion?[g]	Inhalation?[h]	Is the constituent a quantitative COPC?[i]
Butane	106-97-8	no	no	yes	yes	yes	no	no	yes	yes
Carbon disulfide	75-15-0	yes	yes	yes	yes	yes	yes	yes	yes	yes
Cyanogen	460-19-5	no	no	yes	no	no	no	no	no	no
Cyclohexane	110-82-7	yes	no	yes	yes	yes	yes	no	yes	yes
Cyclohexanone	108-94-1	no	no	yes	yes	yes	no	no	yes	yes
Cyclohexene	110-83-8	no	no	yes	yes	yes	no	no	yes	yes
Cyclopentane	287-92-3	no	no	no	yes	yes	no	no	no	no
Ethyl alcohol	64-17-5	no	no	yes	yes	yes	no	no	yes	yes
Ethyl ether	60-29-7	no	yes	no	yes	yes	no	yes	no	yes
Ethyl methacrylate	97-63-2	no	no	no	no	no	no	no	no	no
Formaldehyde	50-00-0	yes	yes	yes	yes	yes	yes	yes	yes	yes
Formamide	75-12-7	no	no	no	yes	yes	no	no	no	no
Formic acid	64-18-6	no	no	yes	yes	yes	no	no	yes	yes
Formic acid, methyl ester	107-31-3	no	no	no	yes	yes	no	no	no	no
Glycidylaldehyde	765-34-4	no	yes	yes	no	no	no	no	no	no
Methyl acetate	79-20-9	no	no	no	yes	yes	no	no	no	no
Methyl alcohol	67-56-1	no	yes	yes	yes	yes	no	yes	yes	yes
Methyl isocyanate	624-83-9	no	no	yes	yes	yes	no	no	yes	yes
Methyl methacrylate	80-62-6	no	yes	yes	no	no	no	no	no	no
Methyl tert-butyl ether	1634-04-4	no	no	yes	yes	yes	no	no	yes	yes
Methylacetylene	74-99-7	no	no	no	yes	yes	no	no	no	no
Methylcyclohexane	108-87-2	no	no	yes	yes	yes	no	no	yes	yes
N,N-Dimethylacetamide	127-19-5	no	no	no	yes	yes	no	no	no	no
n-Butyl alcohol	71-36-3	no	yes	yes	yes	yes	no	yes	yes	yes
n-Heptane	142-82-5	no	no	yes	yes	yes	no	no	yes	yes
n-Hexane	110-54-3	yes	no	yes	yes	yes	yes	no	yes	yes
Nitromethane	75-52-5	no	no	no	yes	yes	no	no	no	no
n-nonane	111-84-2	no	no	yes	yes	yes	no	no	yes	yes

Table D-4. Selection of Ecological COPCs for Inclusion in the Quantitative PRA

		Are there ecological toxicity data available?			concentration be quantified?		Can ecological risk be quantified?			
Constituent of Potential Concern	CAS Registry Number	Direct Contact?[a]	Ingestion?[b]	Inhalation?[c]	Emission Rate Available to Quantify Direct Exposure?[d]	Emission Rate Available to Quantify Indirect Exposure?[e]	Direct Contact?[f]	Ingestion?[g]	Inhalation?[h]	Is the constituent a quantitative COPC?[i]
n-Octane	111-65-9	no	no	yes	yes	yes	no	no	yes	yes
n-Pentane	109-66-0	no	no	yes	yes	yes	no	no	yes	yes
n-Propionaldehyde	123-38-6	no	no	yes	yes	yes	no	no	yes	yes
n-Propyl alcohol	71-23-8	no	no	yes	yes	yes	no	no	yes	yes
n-Valeraldehyde	110-62-3	no	no	no	yes	yes	no	no	no	no
Oxirane	75-21-8	no	no	yes	yes	yes	no	no	yes	yes
p-Cymene	99-87-6	yes	no	no	no	no	no	no	no	no
Phosgene	75-44-5	no	no	yes	no	no	no	no	no	no
Propargyl alcohol	107-19-7	no	yes	yes	no	no	no	no	no	no
Propionic acid	79-09-4	no	no	no	yes	yes	no	no	no	no
Propionitrile	107-12-0	no	no	yes	yes	yes	no	no	yes	yes
Propylene gylcol monomethyl ether	107-98-2	no	no	yes	no	no	no	no	no	no
p-tert-Butyltoluene	98-51-1	yes	no	no	yes	yes	yes	no	no	yes
Triethylamine	121-44-8	no	no	yes	yes	yes	no	no	yes	yes
Trimethylamine	75-50-3	no	no	no	yes	yes	no	no	no	no
Vinyl acetate	108-05-4	yes	no	yes	yes	yes	yes	no	yes	yes
Non-aromatic Halogenated Hydrocarbons										
1,1,1,2-Tetrachloro-2,2-difluoroethane	76-11-9	yes	no	no	yes	yes	yes	no	no	yes
1,1,1,2-Tetrachloroethane	630-20-6	yes	yes	yes	yes	yes	yes	yes	yes	yes
1,1,1-Trichloroethane	71-55-6	yes	yes	yes	yes	yes	yes	yes	yes	yes
1,1,2,2-Tetrachloro-1,2-difluoroethane	76-12-0	yes	no	no	yes	yes	yes	no	no	yes
1,1,2,2-Tetrachloroethane	79-34-5	yes	no	yes	yes	yes	yes	no	yes	yes
1,1,2,2-Tetrachloroethene	127-18-4	yes	yes	yes	yes	yes	yes	yes	yes	yes
1,1,2-Trichloroethane	79-00-5	yes	no	yes	yes	yes	yes	no	yes	yes
1,1,2-Trichloroethylene	79-01-6	yes	yes	yes	yes	yes	yes	yes	yes	yes
1,1-Dichloroethane	75-34-3	yes	no	yes	yes	yes	yes	no	yes	yes
1,1-Dichloroethene	75-35-4	yes	yes	yes	yes	yes	yes	yes	yes	yes

Table D-4. Selection of Ecological COPCs for Inclusion in the Quantitative PRA

		Are there ecological toxicity data available?			concentration be quantified?		Can ecological risk be quantified?			
Constituent of Potential Concern	CAS Registry Number	Direct Contact?[a]	Ingestion?[b]	Inhalation?[c]	Emission Rate Available to Quantify Direct Exposure?[d]	Emission Rate Available to Quantify Indirect Exposure?[e]	Direct Contact?[f]	Ingestion?[g]	Inhalation?[h]	Is the constituent a quantitative COPC?[i]
1,2,2-Trichloro-1,1,2-trifluoroethane	76-13-1	yes	no	yes	yes	yes	yes	no	yes	yes
1,2,3-Trichloropropane	96-18-4	yes	yes	yes	yes	yes	yes	yes	yes	yes
1,2-Dibromo-3-chloropropane	96-12-8	yes	no	yes	no	no	no	no	no	no
1,2-Dichloro-1,1,2,2-tetrafluoroethane	76-14-2	yes	no	yes	yes	yes	yes	no	yes	yes
1,2-Dichloroethane	107-06-2	yes	yes	yes	yes	yes	yes	yes	yes	yes
1,2-Dichloroethylene	540-59-0	yes	yes	no	yes	yes	yes	yes	no	yes
1,2-Dichloropropane	78-87-5	yes	no	yes	yes	yes	yes	no	yes	yes
1,3-Dichloropropene	542-75-6	yes	yes	yes	no	no	no	no	no	no
1,4-Dichloro-2-butene	764-41-0	yes	no	yes	no	no	no	no	no	no
1-Chloroethene	75-01-4	yes	no	yes	yes	yes	yes	no	yes	yes
2,2-Dichloropropionic acid	75-99-0	yes	no	no	yes	yes	yes	no	no	yes
2-Chloropropane	75-29-6	yes	no	yes	no	no	no	no	no	no
3-Chloropropene (Allyl chloride)	107-05-1	yes	no	yes	yes	yes	yes	no	yes	yes
Bromochloromethane	74-97-5	yes	no	yes	yes	yes	yes	no	yes	yes
Bromodichloromethane	75-27-4	yes	yes	no	yes	yes	yes	yes	no	yes
Bromoethene	593-60-2	no	no	yes	no	no	no	no	no	no
Bromoform	75-25-2	no	yes	yes	no	no	no	no	no	no
Bromomethane	74-83-9	no	yes	yes	yes	yes	no	yes	yes	yes
Carbon tetrachloride	56-23-5	yes	yes	yes	yes	yes	yes	yes	yes	yes
Chlorodibromomethane	124-48-1	yes	yes	no	no	no	no	no	no	no
Chlorodifluoromethane	75-45-6	yes	no	yes	yes	yes	yes	no	yes	yes
Chloroethane	75-00-3	yes	no	yes	yes	yes	yes	no	yes	yes
Chloroform	67-66-3	yes	yes	yes	yes	yes	yes	yes	yes	yes
Chloromethane	74-87-3	yes	no	yes	yes	yes	yes	no	yes	yes
Chloropentafluoroethane	76-15-3	yes	no	no	yes	yes	yes	no	no	yes
cis-1,2-Dichloroethene	156-59-2	yes	no	no	no	no	no	no	no	no
cis-1,3-Dichloropropene	10061-01-5	yes	no	no	yes	yes	yes	no	no	yes
Cyanogen bromide	506-68-3	no	yes	yes	no	no	no	no	no	no

Table D-4. Selection of Ecological COPCs for Inclusion in the Quantitative PRA

		Are there ecological toxicity data available?			concentration be quantified?		Can ecological risk be quantified?			
Constituent of Potential Concern	CAS Registry Number	Direct Contact?[a]	Ingestion?[b]	Inhalation?[c]	Emission Rate Available to Quantify Direct Exposure?[d]	Emission Rate Available to Quantify Indirect Exposure?[e]	Direct Contact?[f]	Ingestion?[g]	Inhalation?[h]	Is the constituent a quantitative COPC?[i]
Cyanogen chloride	506-77-4	yes	yes	no	no	no	no	no	no	no
Dichlorodifluoromethane	75-71-8	yes	yes	yes	yes	yes	yes	yes	yes	yes
Dichlorofluoromethane	75-43-4	yes	no	yes	yes	yes	yes	no	yes	yes
Dichloromethane	75-09-2	yes	yes	yes	yes	yes	yes	yes	yes	yes
Difluorodibromomethane	75-61-6	no	no	no	yes	yes	no	no	no	no
Hexafluoroacetone	684-16-2	no	no	yes	yes	yes	no	no	yes	yes
Iodomethane	74-88-4	no	no	no	no	no	no	no	no	no
Methylene bromide	74-95-3	no	no	yes	no	no	no	no	no	no
Pentachloroethane	76-01-7	yes	no	no	no	no	no	no	no	no
trans-1,2-Dichloroethylene	156-60-5	yes	yes	yes	yes	yes	yes	yes	yes	yes
trans-1,3-Dichloropropene	10061-02-6	yes	no	no	yes	yes	yes	no	no	yes
Trichloroacetic acid	76-03-9	yes	no	no	yes	yes	yes	no	no	yes
Trichlorofluoroethane	27154-33-2	yes	no	no	yes	yes	yes	no	no	yes
Trichlorofluoromethane	75-69-4	yes	yes	yes	yes	yes	yes	yes	yes	yes
Trifluorobromomethane	75-63-8	no	no	no	yes	yes	no	no	no	no
Dioxin and Furan Compounds										
1,2,3,4,6,7,8-Heptachlorodibenzo(p)dioxin	35822-46-9	yes	no	no	yes	yes	yes	no	no	yes
1,2,3,4,6,7,8-Heptachlorodibenzofuran	67562-39-4	yes	no	no	yes	yes	yes	no	no	yes
1,2,3,4,7,8,9-Heptachlorodibenzofuran	55673-89-7	yes	no	no	yes	yes	yes	no	no	yes
1,2,3,4,7,8-Hexachlorodibenzo(p)dioxin	39227-28-6	yes	no	no	yes	yes	yes	no	no	yes
1,2,3,4,7,8-Hexachlorodibenzofuran	70648-26-9	yes	no	no	yes	yes	yes	no	no	yes
1,2,3,6,7,8-Hexachlorodibenzo(p)dioxin	57653-85-7	yes	no	no	yes	yes	yes	no	no	yes
1,2,3,6,7,8-Hexachlorodibenzofuran	57117-44-9	yes	yes	no	yes	yes	yes	yes	no	yes
1,2,3,7,8,9-Hexachlorodibenzo(p)dioxin	19408-74-3	yes	no	no	yes	yes	yes	no	no	yes
1,2,3,7,8,9-Hexachlorodibenzofuran	72918-21-9	yes	no	no	yes	yes	yes	no	no	yes
1,2,3,7,8-Pentachlorodibenzo(p)dioxin	40321-76-4	yes	no	no	yes	yes	yes	no	no	yes
1,2,3,7,8-Pentachlorodibenzofuran	57117-41-6	yes	yes	no	yes	yes	yes	yes	no	yes

Table D-4. Selection of Ecological COPCs for Inclusion in the Quantitative PRA

		Are there ecological toxicity data available?			concentration be quantified?		Can ecological risk be quantified?			
Constituent of Potential Concern	CAS Registry Number	Direct Contact?[a]	Ingestion?[b]	Inhalation?[c]	Emission Rate Available to Quantify Direct Exposure?[d]	Emission Rate Available to Quantify Indirect Exposure?[e]	Direct Contact?[f]	Ingestion?[g]	Inhalation?[h]	Is the constituent a quantitative COPC?[i]
2,3,4,6,7,8-Hexachlorodibenzofuran	60851-34-5	yes	no	no	yes	yes	yes	no	no	yes
2,3,4,7,8-Pentachlorodibenzofuran	57117-31-4	yes	yes	no	yes	yes	yes	yes	no	yes
2,3,7,8-Tetrachlorodibenzo(p)dioxin	1746-01-6	yes	yes	no	yes	yes	yes	yes	no	yes
2,3,7,8-Tetrachlorodibenzofuran	51207-31-9	yes	yes	no	yes	yes	yes	yes	no	yes
Dibenzofuran	132-64-9	yes	no	no	yes	yes	yes	no	no	yes
Octachlorodibenzo(p)dioxin	3268-87-9	yes	no	no	yes	yes	yes	no	no	yes
Octachlorodibenzofuran	39001-02-0	yes	no	no	yes	yes	yes	no	no	yes
PCBs										
2,2',3,3',4,4',5-Heptachlorobiphenyl	35065-30-6	yes	no	no	yes	yes	yes	no	no	yes
2,2',3,4,4',5,5'-Heptachlorobiphenyl	35065-29-3	yes	no	no	yes	yes	yes	no	no	yes
2,3,3',4,4',5'-Hexachlorobiphenyl	69782-90-7	yes	yes	no	yes	yes	yes	yes	no	yes
2,3,3',4,4',5-Hexachlorobiphenyl	38380-08-4	yes	yes	no	yes	yes	yes	yes	no	yes
2,3,3',4,4',5,5'-Heptachlorobiphenyl	no cas #	yes	no	no	yes	yes	yes	no	no	yes
2,3,3',4,4'-Pentachlorobiphenyl	32598-14-4	yes	no	no	yes	yes	yes	no	no	yes
2,3,4,4',5-Pentachlorobiphenyl	74472-37-0	yes	no	no	yes	yes	yes	no	no	yes
2',3,4,4',5-Pentachlorobiphenyl	no cas #	yes	no	no	yes	yes	yes	no	no	yes
2,3',4,4',5-Pentachlorobiphenyl	31508-00-6	yes	no	no	yes	yes	yes	no	no	yes
2,3',4,4',5,5'-Hexachlorobiphenyl	no cas #	yes	yes	no	yes	yes	yes	yes	no	yes
3,3',4,4',5-Pentachlorobiphenyl	no cas #	yes	no	no	yes	yes	yes	no	no	yes
3,3',4,4',5,5'-Hexachlorobiphenyl	32774-16-6	yes	yes	no	yes	yes	yes	yes	no	yes
3,3',4,4'-Tetrachlorobiphenyl	32598-13-3	yes	no	no	yes	yes	yes	no	no	yes
3,4,4',5-Tetrachlorobiphenyl	70362-50-4	yes	no	no	yes	yes	yes	no	no	yes
Polychlorinated biphenyls (PCBs)	1336-36-3	yes	yes	yes	yes	yes	yes	yes	yes	yes
Phthalates										
Bis(2-ethylhexyl)phthalate (DEHP)	117-81-7	yes	yes	yes	yes	yes	yes	yes	yes	yes
Butylbenzyl phthalate	85-68-7	yes	no	yes	yes	yes	yes	no	yes	yes

Table D-4. Selection of Ecological COPCs for Inclusion in the Quantitative PRA

		Are there ecological toxicity data available?			concentration be quantified?		Can ecological risk be quantified?			
Constituent of Potential Concern	CAS Registry Number	Direct Contact?[a]	Ingestion?[b]	Inhalation?[c]	Emission Rate Available to Quantify Direct Exposure?[d]	Emission Rate Available to Quantify Indirect Exposure?[e]	Direct Contact?[f]	Ingestion?[g]	Inhalation?[h]	Is the constituent a quantitative COPC?[i]
Di-n-butylphthalate	84-74-2	yes	yes	yes	yes	yes	yes	yes	yes	yes
Diethyl phthalate	84-66-2	yes	yes	no	yes	yes	yes	yes	no	yes
Dimethylphthalate	131-11-3	yes	no	yes	no	no	no	no	no	no
n-Dioctyl phthalate	117-84-0	yes	yes	no	yes	yes	yes	yes	no	yes
Light Polycyclic Aromatic Hydrocarbons										
2-Chloronapthalene	91-58-7	yes	yes	no	yes	yes	yes	yes	no	yes
2-Methyl naphthalene	91-57-6	yes	no	no	no	no	no	no	no	no
5-Nitroacenaphthene	602-87-9	yes	no	no	yes	yes	yes	no	no	yes
Acenaphthene	83-32-9	yes	yes	no	yes	yes	yes	yes	no	yes
Acenaphthylene	208-96-8	yes	no	no	yes	yes	yes	no	no	yes
Anthracene	120-12-7	yes	yes	no	yes	yes	yes	yes	no	yes
Fluorene	86-73-7	yes	yes	no	yes	yes	yes	yes	no	yes
Indene	95-13-6	yes	no	no	yes	yes	yes	no	no	yes
Naphthalene	91-20-3	yes	yes	yes	yes	yes	yes	yes	yes	yes
Phenanthrene	85-01-8	yes	no	no	yes	yes	yes	no	no	yes
Pyrene	129-00-0	yes	yes	no	yes	yes	yes	yes	no	yes
Heavy Polycyclic Aromatic Hydrocarbons										
3-Methylcholanthrene	56-49-5	yes	no	no	yes	yes	yes	no	no	yes
5-Methylchrysene	3697-24-3	yes	no	no	yes	yes	yes	no	no	yes
Benzo(a)anthracene	56-55-3	yes	yes	no	yes	yes	yes	yes	no	yes
Benzo(a)pyrene	50-32-8	yes	yes	yes	yes	yes	yes	yes	yes	yes
Benzo(b)fluoranthene	205-99-2	yes	yes	no	yes	yes	yes	yes	no	yes
Benzo(e)pyrene	192-97-2	yes	no	no	no	no	no	no	no	no
Benzo(g,h,i)perylene	191-24-2	yes	no	no	yes	yes	yes	no	no	yes
Benzo(j)fluoranthene	205-82-3	yes	no	no	yes	yes	yes	no	no	yes
Benzo(k)fluoranthene	207-08-9	yes	yes	no	yes	yes	yes	yes	no	yes

Table D-4. Selection of Ecological COPCs for Inclusion in the Quantitative PRA

		Are there ecological toxicity data available?			concentration be quantified?		Can ecological risk be quantified?			
Constituent of Potential Concern	CAS Registry Number	Direct Contact?[a]	Ingestion?[b]	Inhalation?[c]	Emission Rate Available to Quantify Direct Exposure?[d]	Emission Rate Available to Quantify Indirect Exposure?[e]	Direct Contact?[f]	Ingestion?[g]	Inhalation?[h]	Is the constituent a quantitative COPC?[i]
Benzo[a,i]pyrene	191-30-0	yes	no	no	yes	yes	yes	no	no	yes
Chrysene	218-01-9	yes	yes	no	yes	yes	yes	yes	no	yes
Dibenz(a,h)anthracene	53-70-3	yes	yes	no	yes	yes	yes	yes	no	yes
Dibenz[a,h]acridine	226-36-8	yes	no	no	yes	yes	yes	no	no	yes
Dibenz[a,j]acridine	224-42-0	yes	no	no	yes	yes	yes	no	no	yes
Dibenzo(a,e)fluoranthene	5385-75-1	yes	no	no	no	no	no	no	no	no
Dibenzo(a,h)fluoranthene	no cas #	yes	no	no	no	no	no	no	no	no
Dibenzo[a,e]pyrene	192-65-4	yes	no	no	yes	yes	yes	no	no	yes
Dibenzo[a,h]pyrene	189-64-0	yes	no	no	yes	yes	yes	no	no	yes
Dibenzo[a,i]pyrene	189-55-9	yes	no	no	yes	yes	yes	no	no	yes
Fluoranthene	206-44-0	yes	yes	no	yes	yes	yes	yes	no	yes
Hexachloronaphthalene	1335-87-1	yes	no	no	yes	yes	yes	no	no	yes
Indeno(1,2,3-cd)pyrene	193-39-5	yes	yes	no	yes	yes	yes	yes	no	yes
Octachloronaphthalene	2234-13-1	yes	no	no	yes	yes	yes	no	no	yes
Pentachloronaphthalene	1321-64-8	yes	no	no	yes	yes	yes	no	no	yes
Tetrachloronaphthalene	1335-88-2	yes	no	no	yes	yes	yes	no	no	yes
Trichloronaphthalene	1321-65-9	yes	no	no	yes	yes	yes	no	no	yes
Light Substituted Benzene Compounds										
1,2,3-Trichlorobenzene	87-61-6	yes	no	no	no	no	no	no	no	no
1,2,4-Trichlorobenzene	120-82-1	yes	no	no	yes	yes	yes	no	no	yes
1,2,4-Trimethyl benzene	95-63-6	yes	no	no	no	no	no	no	no	no
1,2-Dichlorobenzene	95-50-1	yes	yes	yes	yes	yes	yes	yes	yes	yes
1,3,5-Trimethyl benzene	108-67-8	yes	no	no	no	no	no	no	no	no
1,3-Dichlorobenzene	541-73-1	yes	no	no	yes	yes	yes	no	no	yes
1,3-Dinitrobenzene	99-65-0	yes	yes	no	no	no	no	no	no	no
1,4-Dichlorobenzene	106-46-7	yes	no	yes	yes	yes	yes	no	yes	yes
1,4-Dinitrobenzene	100-25-4	yes	no	no	yes	yes	yes	no	no	yes

Table D-4. Selection of Ecological COPCs for Inclusion in the Quantitative PRA

		Are there ecological toxicity data available?			concentration be quantified?		Can ecological risk be quantified?			
Constituent of Potential Concern	CAS Registry Number	Direct Contact?[a]	Ingestion?[b]	Inhalation?[c]	Emission Rate Available to Quantify Direct Exposure?[d]	Emission Rate Available to Quantify Indirect Exposure?[e]	Direct Contact?[f]	Ingestion?[g]	Inhalation?[h]	Is the constituent a quantitative COPC?[i]
2,4,5-Trichlorophenol	95-95-4	yes	yes	no	yes	yes	yes	yes	no	yes
2,4,6-Trichlorophenol	88-06-2	yes	no	no	yes	yes	yes	no	no	yes
2,4-Dichlorophenol	120-83-2	yes	yes	no	yes	yes	yes	yes	no	yes
2,4-Dimethylphenol	105-67-9	yes	yes	yes	no	no	no	no	no	no
2,4-Dinitrophenol	51-28-5	yes	yes	yes	no	no	no	no	no	no
2,4-Dinitrotoluene	121-14-2	yes	yes	no	no	no	no	no	no	no
2,6-Dinitrotoluene	606-20-2	yes	yes	yes	no	no	no	no	no	no
2-Chlorophenol	95-57-8	yes	no	yes	yes	yes	yes	no	yes	yes
2-Chlorotoluene	95-49-8	yes	yes	no	yes	yes	yes	yes	no	yes
2-Nitrophenol	88-75-5	yes	no	no	yes	yes	yes	no	no	yes
4,6-Dinitro-o-cresol	534-52-1	yes	no	yes	no	no	no	no	no	no
4-Chlorotoluene	106-43-4	yes	no	no	no	no	no	no	no	no
4-Nitrophenol	100-02-7	yes	no	no	no	no	no	no	no	no
alpha-Methylstyrene	98-83-9	yes	no	no	yes	yes	yes	no	no	yes
Aniline	62-53-3	yes	no	yes	no	no	no	no	no	no
Benzotrichloride	98-07-7	yes	no	yes	no	no	no	no	no	no
Benzyl chloride	100-44-7	yes	no	yes	no	no	no	no	no	no
Bromobenzene	108-86-1	yes	no	no	no	no	no	no	no	no
Chlorobenzene	108-90-7	yes	yes	yes	yes	yes	yes	yes	yes	yes
Cumene	98-82-8	yes	yes	yes	yes	yes	yes	yes	yes	yes
m-Cresol	108-39-4	yes	yes	yes	yes	yes	yes	yes	yes	yes
n-Butyl benzene	104-51-8	yes	no	no	no	no	no	no	no	no
Nitrobenzene	98-95-3	yes	yes	yes	yes	yes	yes	yes	yes	yes
n-Propyl benzene	103-65-1	yes	no	no	no	no	no	no	no	no
o-Cresol	95-48-7	yes	yes	yes	yes	yes	yes	yes	yes	yes
o-Dinitrobenzene	528-29-0	yes	no	no	no	no	no	no	no	no
o-Nitroaniline	88-74-4	yes	no	no	no	no	no	no	no	no
o-Toluidine	95-53-4	yes	no	yes	no	no	no	no	no	no

Table D-4. Selection of Ecological COPCs for Inclusion in the Quantitative PRA

		Are there ecological toxicity data available?			concentration be quantified?		Can ecological risk be quantified?			
Constituent of Potential Concern	CAS Registry Number	Direct Contact?[a]	Ingestion?[b]	Inhalation?[c]	Emission Rate Available to Quantify Direct Exposure?[d]	Emission Rate Available to Quantify Indirect Exposure?[e]	Direct Contact?[f]	Ingestion?[g]	Inhalation?[h]	Is the constituent a quantitative COPC?[i]
p-Chloroaniline	106-47-8	yes	yes	yes	no	no	no	no	no	no
p-Cresol	106-44-5	yes	no	yes	no	no	no	no	no	no
Phenol	108-95-2	yes	yes	yes	yes	yes	yes	yes	yes	yes
p-Nitrochlorobenzene	100-00-5	yes	no	yes	yes	yes	yes	no	yes	yes
p-Toluidine	106-49-0	yes	no	yes	no	no	no	no	no	no
sec-Butyl benzene	135-98-8	yes	no	no	no	no	no	no	no	no
tert-Butyl benzene	98-06-6	yes	no	no	no	no	no	no	no	no
Toluene-2,6-diamine	823-40-5	yes	no	no	no	no	no	no	no	no
Trimethyl benzene	25551-13-7	yes	no	no	yes	yes	yes	no	no	yes
Other Light Semivolatile Compounds										
1,1`-Biphenyl	92-52-4	yes	yes	yes	yes	yes	yes	yes	yes	yes
1,1-Dimethylhydrazine	57-14-7	no	no	yes	yes	yes	no	no	yes	yes
1,2-Dimethylhydrazine	540-73-8	no	no	no	no	no	no	no	no	no
1,2-Diphenylhydrazine	122-66-7	no	no	no	no	no	no	no	no	no
1,3-Propane sultone	1120-71-4	no	no	yes	no	no	no	no	no	no
2,4-Toluene diisocyante	584-84-9	no	no	yes	no	no	no	no	no	no
2-Chloroacetophenone	532-27-4	yes	no	yes	no	no	no	no	no	no
2-Propenoic acid	79-10-7	no	yes	yes	yes	yes	no	yes	yes	yes
4,4-Methylenedianiline	101-77-9	no	no	no	no	no	no	no	no	no
Acetophenone	98-86-2	no	yes	yes	yes	yes	no	yes	yes	yes
Benzoic acid	65-85-0	yes	yes	no	no	no	no	no	no	no
Bis(2-chloroethoxy)methane	111-91-1	yes	no	yes	no	no	no	no	no	no
Bis(2-chloroethyl) ether	111-44-4	yes	no	yes	no	no	no	no	no	no
Chlorocyclopentadiene	41851-50-7	yes	no	no	no	no	no	no	no	no
Cyclohexanol	108-93-0	no	no	no	yes	yes	no	no	no	no
Dichloroisopropyl ether	108-60-1	yes	no	yes	no	no	no	no	no	no
Dichloromethyl ether	542-88-1	yes	no	yes	yes	yes	yes	no	yes	yes

Table D-4. Selection of Ecological COPCs for Inclusion in the Quantitative PRA

		Are there ecological toxicity data available?			concentration be quantified?		Can ecological risk be quantified?			
Constituent of Potential Concern	CAS Registry Number	Direct Contact?[a]	Ingestion?[b]	Inhalation?[c]	Emission Rate Available to Quantify Direct Exposure?[d]	Emission Rate Available to Quantify Indirect Exposure?[e]	Direct Contact?[f]	Ingestion?[g]	Inhalation?[h]	Is the constituent a quantitative COPC?[i]
Dichloropentadiene	no cas #	yes	no	no	no	no	no	no	no	no
Dimethyl sulfate	77-78-1	no	no	yes	no	no	no	no	no	no
Dimethylaniline	121-69-7	no	yes	no	yes	yes	no	yes	no	yes
di-n-Propylnitrosamine	621-64-7	no	no	no	yes	yes	no	no	no	no
Diphenyl ether	101-84-8	no	no	no	yes	yes	no	no	no	no
Epichlorohydrin	106-89-8	yes	no	yes	no	no	no	no	no	no
Ethyl Carbamate (Urethane)	51-79-6	no	no	yes	no	no	no	no	no	no
Ethyl methanesulfonate	62-50-0	no	no	no	no	no	no	no	no	no
Ethylene dibromide	106-93-4	no	no	yes	yes	yes	no	no	yes	yes
Ethylene glycol	107-21-1	no	yes	no	no	no	no	no	no	no
Ethylene glycol monobutyl ether	111-76-2	no	yes	yes	yes	yes	no	yes	yes	yes
Ethylene glycol monoethyl ether acetate	111-15-9	no	no	yes	no	no	no	no	no	no
Ethylene thiourea	96-45-7	no	yes	yes	no	no	no	no	no	no
Furfural	98-01-1	no	yes	yes	no	no	no	no	no	no
Maleic hydrazide	123-33-1	no	yes	yes	no	no	no	no	no	no
Malononitrile	109-77-3	no	no	no	no	no	no	no	no	no
Methyl styrene (mixed isomers)	25013-15-4	yes	no	yes	no	no	no	no	no	no
Methylhydrazine	60-34-4	no	no	yes	yes	yes	no	no	yes	yes
N,N-Diphenylamine	122-39-4	no	yes	no	yes	yes	no	yes	no	yes
Nitric acid, propyl ester	627-13-4	no	no	yes	yes	yes	no	no	yes	yes
N-Nitrosodi-n-butylamine	924-16-3	no	no	no	no	no	no	no	no	no
N-Nitrosomorpholine	59-89-2	no	no	no	yes	yes	no	no	no	no
N-Nitroso-N,N-dimethylamine	62-75-9	no	no	yes	yes	yes	no	no	yes	yes
o-Anisidine	90-04-0	no	no	no	no	no	no	no	no	no
Oxalic acid	144-62-7	no	no	no	yes	yes	no	no	no	no
Phthalic anhydride	85-44-9	no	yes	yes	no	no	no	no	no	no
p-Phthalic acid	100-21-0	no	no	no	yes	yes	no	no	no	no
Pyridine	110-86-1	yes	yes	yes	yes	yes	yes	yes	yes	yes

Table D-4. Selection of Ecological COPCs for Inclusion in the Quantitative PRA

		Are there ecological toxicity data available?			concentration be quantified?		Can ecological risk be quantified?			
Constituent of Potential Concern	CAS Registry Number	Direct Contact?[a]	Ingestion?[b]	Inhalation?[c]	Emission Rate Available to Quantify Direct Exposure?[d]	Emission Rate Available to Quantify Indirect Exposure?[e]	Direct Contact?[f]	Ingestion?[g]	Inhalation?[h]	Is the constituent a quantitative COPC?[i]
Quinoline	91-22-5	no	no	no	yes	yes	no	no	no	no
Quinone	106-51-4	no	no	no	no	no	no	no	no	no
Safrole	94-59-7	no	no	no	no	no	no	no	no	no
Tetrahydrofuran	109-99-9	yes	no	yes	yes	yes	yes	no	yes	yes
Other Heavy Semivolatile Compounds										
1,2,4,5-Tetrachlorobenzene	95-94-3	no	yes	no	no	no	no	no	no	no
1,3,5-Trinitrobenzene	99-35-4	no	yes	no	no	no	no	no	no	no
2,6-Bis(tert-butyl)-4-methylphenol	128-37-0	yes	no	no	yes	yes	yes	no	no	yes
2-Cyclohexyl-4,6-dinitrophenol	131-89-5	yes	yes	no	no	no	no	no	no	no
2-sec-Butyl-4,6-dinitrophenol	88-85-7	yes	no	yes	yes	yes	yes	no	yes	yes
3,3-Dichlorobenzidine	91-94-1	no	no	no	no	no	no	no	no	no
3,3'-Dimethoxybenzidine	119-90-4	no	no	no	no	no	no	no	no	no
4-Bromophenylphenyl ether	101-55-3	yes	no	no	yes	yes	yes	no	no	yes
Ammonium perfluorooctanoate	3825-26-1	no	no	yes	yes	yes	no	no	yes	yes
Azobenzene	103-33-3	no	no	no	no	no	no	no	no	no
Bis(3-tert-butyl-4-hydroxy-6-methyl-phenyl)sulfide	96-69-5	no	no	no	yes	yes	no	no	no	no
Captan	133-06-2	yes	no	no	no	no	no	no	no	no
Chlorobenzilate	510-15-6	no	no	no	no	no	no	no	no	no
Dibutylphosphate	107-66-4	no	no	no	yes	yes	no	no	no	no
Dimethyl aminoazobenzene	60-11-7	no	no	no	no	no	no	no	no	no
Hexachlorobenzene	118-74-1	yes	yes	yes	yes	yes	yes	yes	yes	yes
Hexachlorobutadiene	87-68-3	yes	yes	yes	yes	yes	yes	yes	yes	yes
Hexachlorocyclopentadiene	77-47-4	yes	yes	no	no	no	no	no	no	no
Hexachloroethane	67-72-1	yes	yes	yes	yes	yes	yes	yes	yes	yes
Hexachlorophene	70-30-4	yes	yes	yes	no	no	no	no	no	no
Hexamethylene-1,5-diisocyanate	822-06-0	no	no	yes	no	no	no	no	no	no
Mirex	2385-85-5	yes	yes	no	yes	yes	yes	yes	no	yes

Table D-4. Selection of Ecological COPCs for Inclusion in the Quantitative PRA

		Are there ecological toxicity data available?			concentration be quantified?		Can ecological risk be quantified?			
Constituent of Potential Concern	CAS Registry Number	Direct Contact?[a]	Ingestion?[b]	Inhalation?[c]	Emission Rate Available to Quantify Direct Exposure?[d]	Emission Rate Available to Quantify Indirect Exposure?[e]	Direct Contact?[f]	Ingestion?[g]	Inhalation?[h]	Is the constituent a quantitative COPC?[i]
Nitrofen	1836-75-5	yes	no	no	yes	yes	yes	no	no	yes
Pentachlorobenzene	608-93-5	yes	yes	no	no	no	no	no	no	no
Pentachloronitrobenzene	82-68-8	yes	yes	yes	yes	yes	yes	yes	yes	yes
Pentachlorophenol	87-86-5	yes	yes	yes	yes	yes	yes	yes	yes	yes
Picric acid	88-89-1	no	no	no	yes	yes	no	no	no	no
Pronamide	23950-58-5	yes	yes	no	no	no	no	no	no	no
Strychnine	57-24-9	no	yes	no	no	no	no	no	no	no
Terphenyls	26140-60-3	no	no	no	yes	yes	no	no	no	no
Tributyl phosphate	126-73-8	no	no	yes	yes	yes	no	no	yes	yes
Trifluralin	1582-09-8	no	yes	no	yes	yes	no	yes	no	yes
Triphenylamine	603-34-9	no	no	no	yes	yes	no	no	no	no
Herbicides and Organochlorinated Pesticides										
2,4,5-T	93-76-5	yes	yes	no	yes	yes	yes	yes	no	yes
2,4-D and esters	94-75-7	yes	no	no	yes	yes	yes	no	no	yes
4,4'-DDD	72-54-8	yes	no	no	yes	yes	yes	no	no	yes
4,4'-DDE	72-55-9	yes	yes	no	yes	yes	yes	yes	no	yes
4,4'-DDT	50-29-3	yes	yes	no	yes	yes	yes	yes	no	yes
Aldrin	309-00-2	yes	yes	yes	yes	yes	yes	yes	yes	yes
alpha-BHC	319-84-6	yes	no	no	yes	yes	yes	no	no	yes
beta-BHC	319-85-7	yes	no	no	yes	yes	yes	no	no	yes
Chlordane	57-74-9	yes	yes	yes	no	no	no	no	no	no
Delta-BHC	319-86-8	yes	no	no	yes	yes	yes	no	no	yes
Dieldrin	60-57-1	yes	yes	yes	yes	yes	yes	yes	yes	yes
Endothall	145-73-3	no	yes	no	no	no	no	no	no	no
Endrin	72-20-8	yes	yes	yes	yes	yes	yes	yes	yes	yes
gamma-BHC (Lindane)	58-89-9	yes	yes	yes	yes	yes	yes	yes	yes	yes
Heptachlor	76-44-8	yes	yes	yes	yes	yes	yes	yes	yes	yes

Table D-4. Selection of Ecological COPCs for Inclusion in the Quantitative PRA

		Are there ecological toxicity data available?			concentration be quantified?		Can ecological risk be quantified?			
Constituent of Potential Concern	CAS Registry Number	Direct Contact?[a]	Ingestion?[b]	Inhalation?[c]	Emission Rate Available to Quantify Direct Exposure?[d]	Emission Rate Available to Quantify Indirect Exposure?[e]	Direct Contact?[f]	Ingestion?[g]	Inhalation?[h]	Is the constituent a quantitative COPC?[i]
Isodrin	465-73-6	yes	no	no	yes	yes	yes	no	no	yes
Methoxychlor	72-43-5	yes	yes	no	yes	yes	yes	yes	no	yes
Silvex (2,4,5-TP)	93-72-1	yes	yes	no	yes	yes	yes	yes	no	yes
Toxaphene	8001-35-2	yes	yes	yes	yes	yes	yes	yes	yes	yes
Inorganics										
Metals										
Aluminum	7429-90-5	yes	yes	no	yes	yes	yes	yes	no	yes
Antimony	7440-36-0	yes	yes	yes	yes	yes	yes	yes	yes	yes
Arsenic	7440-38-2	yes	yes	no	yes	yes	yes	yes	no	yes
Barium	7440-39-3	yes	yes	no	yes	yes	yes	yes	no	yes
Beryllium	7440-41-7	yes	yes	no	yes	yes	yes	yes	no	yes
Bismuth	7440-69-9	no	no	no	yes	yes	no	no	no	no
Boron	7440-42-8	yes	yes	yes	yes	yes	yes	yes	yes	yes
Cadmium	7440-43-9	yes	yes	yes	yes	yes	yes	yes	yes	yes
Calcium	7440-70-2	no	no	no	yes	yes	no	no	no	no
Chromium (and VI)	18540-29-9	yes	yes	no	yes	yes	yes	yes	no	yes
Cobalt	7440-48-4	yes	yes	yes	yes	yes	yes	yes	yes	yes
Copper	7440-50-8	yes	yes	no	yes	yes	yes	yes	no	yes
Iron	7439-89-6	yes	no	yes	yes	yes	yes	no	yes	yes
Lead	7439-92-1	yes	yes	yes	yes	yes	yes	yes	yes	yes
Lithium	7439-93-2	yes	yes	no	yes	yes	yes	yes	no	yes
Magnesium	7439-95-4	no	no	no	yes	yes	no	no	no	no
Manganese	7439-96-5	yes	yes	no	yes	yes	yes	yes	no	yes
Mercury	7439-97-6	yes	yes	yes	yes	yes	yes	yes	yes	yes
Molybdenum	7439-98-7	yes	yes	yes	yes	yes	yes	yes	yes	yes
Nickel	7440-02-0	yes	yes	yes	yes	yes	yes	yes	yes	yes
Potassium	7440-09-7	no	no	no	yes	yes	no	no	no	no
Rhodium	7440-16-6	yes	no	no	yes	yes	yes	no	no	yes

Table D-4. Selection of Ecological COPCs for Inclusion in the Quantitative PRA

		Are there ecological toxicity data available?			concentration be quantified?		Can ecological risk be quantified?			
Constituent of Potential Concern	CAS Registry Number	Direct Contact?[a]	Ingestion?[b]	Inhalation?[c]	Emission Rate Available to Quantify Direct Exposure?[d]	Emission Rate Available to Quantify Indirect Exposure?[e]	Direct Contact?[f]	Ingestion?[g]	Inhalation?[h]	Is the constituent a quantitative COPC?[i]
Selenium	7782-49-2	yes	yes	yes	yes	yes	yes	yes	yes	yes
Silicon	7440-21-3	no	no	no	yes	yes	no	no	no	no
Silver	7440-22-4	yes	yes	no	yes	yes	yes	yes	no	yes
Sodium	7440-23-5	no	no	no	yes	yes	no	no	no	no
Strontium	7440-24-6	yes	yes	no	nd	no	no	no	no	no
Tantalum	7440-25-7	no	no	no	yes	yes	no	no	no	no
Thallium	7440-28-0	yes	yes	no	yes	yes	yes	yes	no	yes
Tin	7440-31-5	yes	no	no	yes	yes	yes	no	no	yes
Tungsten	7440-33-7	no	no	no	yes	yes	no	no	no	no
Uranium	7440-61-1	yes	yes	no	yes	yes	yes	yes	no	yes
Vanadium	7440-62-2	yes	yes	no	yes	yes	yes	yes	no	yes
Yttrium	7440-65-5	no	no	no	yes	yes	no	no	no	no
Zinc	7440-66-6	yes	yes	no	yes	yes	yes	yes	no	yes
Zirconium	7440-67-7	yes	no	no	yes	yes	yes	no	no	yes
Non-metals and Ions										
Ammonia/Ammonium	7664-41-7	no	no	yes	yes	yes	no	no	yes	yes
Bromide	24959-67-9	yes	no	no	yes	yes	yes	no	no	yes
Chloride	16887-00-6	no	no	no	yes	yes	no	no	no	no
Cyanide	57-12-5	yes	yes	no	yes	yes	yes	yes	no	yes
Fluoride	16984-48-8	yes	yes	no	yes	yes	yes	yes	no	yes
Hydroxide	14280-30-9	no	no	no	yes	yes	no	no	no	no
Iodine	7553-56-2	yes	no	yes	yes	yes	yes	no	yes	yes
Nitrate	14797-55-8	no	no	no	yes	yes	no	no	no	no
Nitrite	14797-65-0	no	no	no	yes	yes	no	no	no	no
Phosphate	14265-44-2	no	no	no	yes	yes	no	no	no	no
Phosphorus	7723-14-0	no	no	yes	yes	yes	no	no	yes	yes
Sulfate	14808-79-8	no	no	no	yes	yes	no	no	no	no

Table D-4. Selection of Ecological COPCs for Inclusion in the Quantitative PRA

		Are there ecological toxicity data available?			concentration be quantified?		Can ecological risk be quantified?			
Constituent of Potential Concern	CAS Registry Number	Direct Contact?[a]	Ingestion?[b]	Inhalation?[c]	Emission Rate Available to Quantify Direct Exposure?[d]	Emission Rate Available to Quantify Indirect Exposure?[e]	Direct Contact?[f]	Ingestion?[g]	Inhalation?[h]	Is the constituent a quantitative COPC?[i]
Total Sulfur	63705-05-5	yes	no	yes	nd	yes	no	no	yes	yes
Criteria Pollutants										
Carbon dioxide	124-38-9	no	no	no	nd	yes	no	no	no	no
Nitrogen dioxide	10102-44-0	no	no	no	nd	yes	no	no	no	no
Ozone	10028-15-6	no	no	no	nd	yes	no	no	no	no
Particulate matter	no cas #	no	no	no	nd	yes	no	no	no	no
Sulfur dioxide	7446-09-5	no	no	no	nd	yes	no	no	no	no

nd = not determined at this time

[a] Toxicity reference values for plants, earthworms, sediment-dwelling biota and aquatic biota appear in Tables C-3-1, C-3-2, C-3-8, and C-3-9, respectively. If a TRV for any of these receptors is available, a value of "yes" appears in this column.

[b] Oral toxicity reference values for birds and mammals appear in Tables C-3-4 and C-3-6, respectively. If a TRV for any of these receptors is available, a value of "yes" appears in this column.

[c] Inhalation toxicity reference values for mammals appear in Table C-3-7. If a TRV is available, a value of "yes" appears in this column.

[d] Is an emission rate estimate available to quantify direct exposure (i.e., air concentrations)? If so, then a value of "yes" appears in this column.

[e] Is an emission rate estimate available to quantify indirect exposure (i.e., air concentrations)? If so, then a value of "yes" appears in this column.

[f] If a TRV for plants, earthworms, sediment-dwelling biota or aquatic biota is available and a laboratory analysis method is available, then a value of "yes" appears in this column.

[g] If an oral TRV for birds or mammals is available and a laboratory analysis method and all chemical-specific parameters required to model indirect exposure are available, a value of "yes" appears in this column.

[h] If an inhalation TRV for mammals is available and a laboratory analysis method and all chemical-specific parameters required to model indirect exposure are available, a value of "yes" appears in this column.

[i] If risk can be quantified for either direct exposure to plants, earthworms, sediment-dwelling biota, or aquatic biota, indirect exposure by ingestion to birds or mammals, or indirect exposure by inhalation to mammals, then a value of "yes" appears in this column.

Table D-5. Selection of Ecological ROPCs for Inclusion in the Quantitative PRA

		Are there ecological toxicity data available?			Can exposure concentration be quantified?		Can ecological risk be quantified?			
Consituent of Potential Concern	CAS Registry Number	Direct Contact?[a]	Ingestion?[b]	Inhalation?[c]	Emission Rate Available to Quantify Direct Exposure? [D]	Emission Rate Available to Quantify Indirect Exposure? [E]	Direct Contact?[f]	Ingestion?[g]	Inhalation?[h]	Is constituent a quantitative ROPC?[i]
Actinium-227	14952-40-0	yes	yes	yes	no	no	no	no	no	no
Americium-241	14596-10-2	yes	yes	yes	no	no	no	no	no	no
Americium-243	14993-75-0	yes	yes	yes	no	no	no	no	no	no
Antimony-125	14234-35-6	yes	yes	yes	no	no	no	no	no	no
Barium-137	13981-97-0	yes	yes	yes	yes	yes	yes	yes	yes	yes
Cadmium-113	no cas #	yes	yes	yes	no	no	no	no	no	no
Carbon-14	14762-75-5	yes	yes	yes	yes	yes	yes	yes	yes	yes
Cesium-134	13967-70-9	yes	yes	yes	yes	yes	yes	yes	yes	yes
Cesium-137	10045-97-3	yes	yes	yes	no	no	no	no	no	no
Cobalt-60	10198-40-0	yes	yes	yes	yes	yes	yes	yes	yes	yes
Curium-242	15510-73-3	yes	yes	yes	no	no	no	no	no	no
Curium-243	15757-87-6	yes	yes	yes	no	no	no	no	no	no
Curium-244	13981-15-2	yes	yes	yes	no	no	no	no	no	no
Europium-152	14683-23-9	yes	yes	yes	no	no	no	no	no	no
Europium-154	15585-10-1	yes	yes	yes	yes	yes	yes	yes	yes	yes
Europium-155	14391-16-3	yes	yes	yes	yes	yes	yes	yes	yes	yes
Iodine-129	15046-84-1	yes	yes	yes	yes	yes	yes	yes	yes	yes
Neptunium-237	13994-20-2	yes	yes	yes	yes	yes	yes	yes	yes	yes
Nickel-59	14336-70-0	yes	yes	yes	no	no	no	no	no	no
Nickel-63	13981-37-8	yes	yes	yes	no	no	no	no	no	no
Niobium-93	7440-03-1	yes	yes	yes	no	no	no	no	no	no
Plutonium-238	13981-16-3	yes	yes	yes	yes	yes	yes	yes	yes	yes
Plutonium-239	15117-48-3	yes	yes	yes	yes	yes	yes	yes	yes	yes
Plutonium-240	14119-33-6	yes	yes	yes	yes	yes	yes	yes	yes	yes
Plutonium-241	14119-32-5	yes	yes	yes	yes	yes	yes	yes	yes	yes
Plutonium-242	13982-10-0	yes	yes	yes	no	no	no	no	no	no
Protactinium-231	14331-85-2	yes	yes	yes	no	no	no	no	no	no
Radium-226	13982-63-3	yes	yes	yes	no	no	no	no	no	no
Radium-228	15262-20-1	yes	yes	yes	no	no	no	no	no	no
Ruthenium-106	13967-48-1	yes	yes	yes	no	no	no	no	no	no

Table D-5. Selection of Ecological ROPCs for Inclusion in the Quantitative PRA

		Are there ecological toxicity data available?			Can exposure concentration be quantified?		Can ecological risk be quantified?			
Consituent of Potential Concern	CAS Registry Number	Direct Contact?[a]	Ingestion?[b]	Inhalation?[c]	Emission Rate Available to Quantify Direct Exposure? [D]	Emission Rate Available to Quantify Indirect Exposure? [E]	Direct Contact?[f]	Ingestion?[g]	Inhalation?[h]	Is constituent a quantitative ROPC?[i]
Samarium-151	15715-94-3	yes	yes	yes	no	no	no	no	no	no
Selenium-79	no cas #	yes	yes	yes	no	no	no	no	no	no
Strontium-90	10098-97-2	yes	yes	yes	yes	yes	yes	yes	yes	yes
Technetium-99	14133-76-7	yes	yes	yes	yes	yes	yes	yes	yes	yes
Thorium-229	15594-54-4	yes	yes	yes	no	no	no	no	no	no
Thorium-232	7440-29-1	yes	yes	yes	no	no	no	no	no	no
Tin-126	15832-50-5	yes	yes	yes	no	no	no	no	no	no
Tritium	10028-17-8	yes	yes	yes	yes	yes	yes	yes	yes	yes
Uranium-232	14158-29-3	yes	yes	yes	no	no	no	no	no	no
Uranium-233	13968-55-3	yes	yes	yes	no	no	no	no	no	no
Uranium-234	13966-29-5	yes	yes	yes	no	no	no	no	no	no
Uranium-235	15117-96-1	yes	yes	yes	yes	yes	yes	yes	yes	yes
Uranium-236	13982-70-2	yes	yes	yes	yes	yes	yes	yes	yes	yes
Uranium-238	7440-61-1	yes	yes	yes	no	no	no	no	no	no
Yttrium-90	10098-91-6	yes	yes	yes	yes	yes	yes	yes	yes	yes
Zirconium-93	15751-77-6	yes	yes	yes	no	no	no	no	no	no

nd = not determined at this time

[a] If a radiological TRV for plants, soil-dwelling invertebrates, sediment-dwelling biota, or aquatic biota is available, a value of "yes" appears in this column.

[b] If an radiological ingestion TRV for birds or mammals is available, a value of "yes" appears in this column.

[c] If an radiological inhalation TRV for birds or mammals is available, a value of "yes" appears in this column.

[d] Is an emission rate estimate available to quantify direct exposure (i.e., air concentrations)? If so, then a value of "yes" appears in this column.

[e] Is an emission rate estimate available to quantify indirect exposure (i.e., air concentrations)? If so, then a value of "yes" appears in this column.

[f] If a radiological TRV for plants, soil-dwelling invertebrates, sediment-dwelling biota or aquatic biota is available and a laboratory analysis method is available, then a value of "yes" appears in this column.

[g] If an radiological ingestion TRV for birds or mammals is available and a laboratory analysis method and all chemical-specific parameters required to model indirect exposure are available, a value of "yes" appears in this column.

[h] If a radiological inhalation TRV for mammals is available and a laboratory analysis method and all chemical-specific parameters required to model indirect exposure are available, a value of "yes" appears in this column.

[i] If risk can be quantified for either direct exposure to plants, earthworms, sediment-dwelling biota, or aquatic biota, indirect exposure by ingestion to birds or mammals, or indirect exposure by inhalation to mammals, then a value of "yes" appears in this column.

Table D-6. Summary of Selection of Ecological COPCs and ROPCs for Inclusion in the Quantitative PRA

	Number that can be evaluated quantitatively	Number that cannot be evaluated quantitatively	Number that cannot yet be determined	Total
Organic COPCs	237	133	0	370
Inorganic COPCs	33	21	0	54
ROPCs	18	28	0	46
Total	288	182	0	470

Appendix E

Appendix E

COPCs and ROPCs for Which There are Emission Rates

Table E-1. List of Organic Constituents for Which There are Estimated Emission Rates and No Emission Rates

CAS Registry Number	Constituent of Potential Concern With Emission Rates	CAS Registry Number	Constituent of Potential Concern With Emission Rates
Aromatic Halogenated Hydrocarbons		**Dioxin and Furan Compounds**	
58-90-2	2,3,4,6-Tetrachlorophenol	132-64-9	Dibenzofuran
59-50-7	4-Chloro-3-methylphenol	1746-01-6	2,3,7,8-Tetrachlorodibenzo(p)dioxin [a]
Aromatic Nonhalogenated Hydrocarbons		**PCBs**	
100-41-4	Ethyl benzene	1336-36-3	Polychlorinated biphenyls (PCBs)
100-42-5	Styrene	1746-01-6	2,3,7,8-TCDD (coplanar PCBs) [b]
106-42-3	p-Xylene	**Phthalates**	
108-38-3	m-Xylene	117-81-7	Bis(2-ethylhexyl)phthalate (DEHP)
108-88-3	Toluene	117-84-0	n-Dioctyl phthalate
71-43-2	Benzene	84-66-2	Diethyl phthalate
88-72-2	2-Nitrotoluene	84-74-2	Dibutyl phthalate
92-93-3	4-Nitrobiphenyl	85-68-7	Butylbenzyl phthalate
95-47-6	o-Xylene	**Light Polycyclic Aromatic Hydrocarbons**	
Non-aromatic Nonhalogenated Hydrocarbons		120-12-7	Anthracene
106-35-4	3-Heptanone	129-00-0	Pyrene
106-88-7	1,2-Epoxybutane	208-96-8	Acenaphthylene
106-97-8	Butane	602-87-9	5-Nitroacenaphthene
106-99-0	1,3-Butadiene	83-32-9	Acenaphthene
107-02-8	Acrolein	85-01-8	Phenanthrene
107-12-0	Propionitrile	86-73-7	Fluorene
107-13-1	Acrylonitrile	91-20-3	Naphthalene
107-18-6	2-Propene-1-ol	91-58-7	2-Chloronapthalene
107-31-3	Formic acid, methyl ester	95-13-6	Indene
107-87-9	2-Pentanone	**Heavy Polycyclic Aromatic Hydrocarbons**	
108-03-2	1-Nitropropane	1321-64-8	Pentachloronaphthalene
108-05-4	Vinyl acetate	1321-65-9	Trichloronaphthalene
108-10-1	4-Methyl-2-pentanone	1335-87-1	Hexachloronaphthalene
108-20-3	Bis(isopropyl)ether	1335-88-2	Tetrachloronaphthalene
108-87-2	Methylcyclohexane	189-55-9	Dibenzo[a,i]pyrene
108-94-1	Cyclohexanone	189-64-0	Dibenzo[a,h]pyrene
109-66-0	n-Pentane	191-24-2	Benzo(g,h,i)perylene
110-12-3	5-Methyl-2-hexanone	191-30-0	Benzo[a,i]pyrene
110-43-0	2-Heptanone	192-65-4	Dibenzo[a,e]pyrene
110-54-3	n-Hexane	193-39-5	Indeno(1,2,3-cd)pyrene
110-62-3	n-Valeraldehyde	205-82-3	Benzo(j)fluoranthene
110-82-7	Cyclohexane	205-99-2	Benzo(b)fluoranthene
110-83-8	Cyclohexene	206-44-0	Fluoranthene
111-65-9	n-Octane	207-08-9	Benzo(k)fluoranthene
111-84-2	n-Nonane	218-01-9	Chrysene
121-44-8	Triethylamine	2234-13-1	Octachloronaphthalene
123-19-3	4-Heptanone	224-42-0	Dibenz[a,j]acridine
123-38-6	n-Propionaldehyde	226-36-8	Dibenz[a,h]acridine
123-51-3	3-Methyl-1-butanol	3697-24-3	5-Methylchrysene
123-86-4	Acetic acid n-butyl ester	50-32-8	Benzo(a)pyrene
123-91-1	1,4-Dioxane	53-70-3	Dibenz(a,h)anthracene

Table E-1. List of Organic Constituents for Which There are Estimated Emission Rates and No Emission Rates

CAS Registry Number	Constituent of Potential Concern With Emission Rates	CAS Registry Number	Constituent of Potential Concern With Emission Rates
126-98-7	2-Methyl-2-propenenitrile	56-49-5	3-Methylcholanthrene
127-19-5	N,N-Dimethylacetamide	56-55-3	Benzo(a)anthracene
141-78-6	Acetic acid ethyl ester	**Light Substituted Benzene Compounds**	
141-79-7	4-Methyl-3-penten-2-one	100-00-5	p-Nitrochlorobenzene
142-82-5	n-Heptane	100-25-4	1,4-Dinitrobenzene
1634-04-4	Methyl tert-butyl ether	106-46-7	1,4-Dichlorobenzene
287-92-3	Cyclopentane	108-39-4	m-Cresol
4170-30-3	2-Butenaldehyde (2-Butenal)	108-90-7	Chlorobenzene
50-00-0	Formaldehyde	108-95-2	Phenol
540-84-1	2,2,4-Trimethylpentane	120-82-1	1,2,4-Trichlorobenzene
563-80-4	3-Methyl-2-butanone	120-83-2	2,4-Dichlorophenol
591-78-6	2-Hexanone	25551-13-	Trimethyl benzene
60-29-7	Ethyl ether	541-73-1	1,3-Dichlorobenzene
60-35-5	Acetamide	88-06-2	2,4,6-Trichlorophenol
624-83-9	Methyl isocyanate	88-75-5	2-Nitrophenol
64-17-5	Ethyl alcohol	95-48-7	o-Cresol
64-18-6	Formic acid	95-49-8	2-Chlorotoluene
64-19-7	Acetic acid	95-50-1	1,2-Dichlorobenzene
67-56-1	Methyl alcohol	95-57-8	2-Chlorophenol
67-63-0	2-Propyl alcohol	95-95-4	2,4,5-Trichlorophenol
67-64-1	2-Propanone (Acetone)	98-82-8	Cumene
71-23-8	n-Propyl alcohol	98-83-9	alpha-Methylstyrene
71-36-3	n-Butyl alcohol	98-95-3	Nitrobenzene
74-99-7	Methylacetylene	**Other Light Semivolatile Compounds**	
75-05-8	Acetonitrile	100-21-0	p-Phthalic acid
75-07-0	Acetaldehyde	101-84-8	Diphenyl ether
75-12-7	Formamide	106-93-4	Ethylene dibromide
75-15-0	Carbon disulfide	108-93-0	Cyclohexanol
75-21-8	Oxirane	109-99-9	Tetrahydrofuran
75-50-3	Trimethylamine	110-86-1	Pyridine
75-52-5	Nitromethane	111-76-2	Ethylene glycol monobutyl ether
75-55-8	2-Methylaziridine	121-69-7	Dimethylaniline
75-65-0	2-Methyl-2-propanol	122-39-4	N,N-Diphenylamine
78-83-1	2-Methylpropyl alcohol	144-62-7	Oxalic acid
78-92-2	1-Methylpropyl alcohol	542-88-1	Dichloromethyl ether
78-93-3	2-Butanone	57-14-7	1,1-Dimethylhydrazine
79-09-4	Propionic acid	59-89-2	N-Nitrosomorpholine
79-20-9	Methyl acetate	60-34-4	Methylhydrazine
96-22-0	3-Pentanone	621-64-7	Di-n-Propylnitrosamine
98-51-1	p-tert-Butyltoluene	627-13-4	Nitric acid, propyl ester
Non-aromatic Halogenated Hydrocarbons		62-75-9	N-Nitroso-N,N-dimethylamine
10061-01-	cis-1,3-Dichloropropene	79-10-7	2-Propenoic acid
10061-02-	trans-1,3-Dichloropropene	91-22-5	Quinoline
107-05-1	3-Chloropropene (Allyl chloride)	92-52-4	1,1`-Biphenyl
107-06-2	1,2-Dichloroethane	98-86-2	Acetophenone

Table E-1. List of Organic Constituents for Which There are Estimated Emission Rates and No Emission Rates

CAS Registry Number	Constituent of Potential Concern With Emission Rates	CAS Registry Number	Constituent of Potential Concern With Emission Rates
127-18-4	1,1,2,2-Tetrachloroethene	**Other Heavy Semivolatile Compounds**	
156-60-5	trans-1,2-Dichloroethylene	101-55-3	4-Bromophenylphenyl ether
27154-33-	Trichlorofluoroethane	107-66-4	Dibutylphosphate
540-59-0	1,2-Dichloroethylene	118-74-1	Hexachlorobenzene
56-23-5	Carbon tetrachloride	126-73-8	Tributyl phosphate
630-20-6	1,1,1,2-Tetrachloroethane	128-37-0	2,6-Bis(tert-butyl)-4-methylphenol
67-66-3	Chloroform	1582-09-8	Trifluralin
684-16-2	Hexafluoroacetone	1836-75-5	Nitrofen
71-55-6	1,1,1-Trichloroethane	2385-85-5	Mirex
74-83-9	Bromomethane	26140-60-	Terphenyls
74-87-3	Chloromethane	3825-26-1	Ammonium perfluorooctanoate
74-97-5	Bromochloromethane	603-34-9	Triphenylamine
75-00-3	Chloroethane	67-72-1	Hexachloroethane
75-01-4	1-Chloroethene	82-68-8	Pentachloronitrobenzene
75-09-2	Dichloromethane	87-68-3	Hexachlorobutadiene
75-27-4	Bromodichloromethane	87-86-5	Pentachlorophenol
75-34-3	1,1-Dichloroethane	88-85-7	2-sec-Butyl-4,6-dinitrophenol
75-35-4	1,1-Dichloroethene	88-89-1	Picric acid
75-43-4	Dichlorofluoromethane	96-69-5	Bis(3-tert-butyl-4-hydroxy-6-methyl-phenyl)sulf
75-45-6	Chlorodifluoromethane	**Herbicides and Organochlorinated Pesticides**	
75-61-6	Difluorodibromomethane	309-00-2	Aldrin
75-63-8	Trifluorobromomethane	319-84-6	alpha-BHC
75-69-4	Trichlorofluoromethane	319-85-7	beta-BHC
75-71-8	Dichlorodifluoromethane	319-86-8	Delta-BHC
75-99-0	2,2-Dichloropropionic acid	465-73-6	Isodrin
76-03-9	Trichloroacetic acid	50-29-3	4,4-DDT
76-11-9	1,1,1,2-Tetrachloro-2,2-difluoroethane	58-89-9	gamma-BHC (Lindane)
76-12-0	1,1,2,2-Tetrachloro-1,2-difluoroethane	60-57-1	Dieldrin
76-13-1	1,2,2-Trichloro-1,1,2-trifluoroethane	72-20-8	Endrin
76-14-2	1,2-Dichloro-1,1,2,2-tetrafluoroethane	72-43-5	Methoxychlor
76-15-3	Chloropentafluoroethane	72-54-8	4,4-DDD
78-87-5	1,2-Dichloropropane	72-55-9	4,4-DDE
79-00-5	1,1,2-Trichloroethane	76-44-8	Heptachlor
79-01-6	1,1,2-Trichloroethylene	8001-35-2	Toxaphene
79-34-5	1,1,2,2-Tetrachloroethane	93-72-1	Silvex (2,4,5-TP)
96-18-4	1,2,3-Trichloropropane	93-76-5	2,4,5-T
		94-75-7	2,4-D and esters

Table E-1. List of Organic Constituents for Which There are Estimated Emission Rates and No Emission Rates

Constituent of Potential Concern	Constituent of Potential Concern
Without Emission Rates	**Without Emission Rates**
Aromatic Halogenated Hydrocarbons	**Light Substituted Benzene Compounds (continued)**
Aromatic Nonhalogenated Hydrocarbons	n-Butyl benzene
Benzyl alcohol	2,4-Dimethylphenol
Benzaldehyde	4-Chlorotoluene
Non-aromatic Nonhalogenated Hydrocarbons	p-Cresol
Propargyl alcohol	p-Chloroaniline
Propylene gylcol monomethyl ether	p-Toluidine
2-Methoxyethanol	1,3,5-Trimethyl benzene
2-Ethoxyethanol	Bromobenzene
Cyanogen	2,4-Dinitrotoluene
Phosgene	sec-Butyl benzene
Glycidylaldehyde	2,4-Dinitrophenol
Methyl methacrylate	o-Dinitrobenzene
Ethyl methacrylate	4,6-Dinitro-o-cresol
p-Cymene	2,6-Dinitrotoluene
Non-aromatic Halogenated Hydrocarbons	Aniline
Chlorodibromomethane	Toluene-2,6-diamine
cis-1,2-Dichloroethene	1,2,3-Trichlorobenzene
Cyanogen bromide	o-Nitroaniline
Cyanogen chloride	o-Toluidine
1,3-Dichloropropene	1,2,4-Trimethyl benzene
Bromoethene	tert-Butyl benzene
Iodomethane	Benzotrichloride
Methylene bromide	1,3-Dinitrobenzene
Bromoform	**Other Light Semivolatile Compounds**
2-Chloropropane	4,4-Methylenedianiline
Pentachloroethane	Quinone
1,4-Dichloro-2-butene	Epichlorohydrin
1,2-Dibromo-3-chloropropane	Ethylene glycol
Dioxin and Furan Compounds [a]	Dichloroisopropyl ether
1,2,3,7,8,9-Hexachlorodibenzo(p)dioxin	Malononitrile
Octachlorodibenzo(p)dioxin	Ethylene glycol monoethyl ether acetate
1,2,3,4,6,7,8-Heptachlorodibenzo(p)dioxin	Bis(2-chloroethyl) ether
Octachlorodibenzofuran	Bis(2-chloroethoxy)methane
1,2,3,4,7,8-Hexachlorodibenzo(p)dioxin	1,3-Propane sultone
1,2,3,7,8-Pentachlorodibenzo(p)dioxin	1,2-Diphenylhydrazine
2,3,7,8-Tetrachlorodibenzofuran	Maleic hydrazide
1,2,3,4,7,8,9-Heptachlorodibenzofuran	Methyl styrene (mixed isomers)
2,3,4,7,8-Pentachlorodibenzofuran	Chlorocyclopentadiene
1,2,3,7,8-Pentachlorodibenzofuran	Ethyl Carbamate (urethane)
1,2,3,6,7,8-Hexachlorodibenzofuran	2-Chloroacetophenone
1,2,3,6,7,8-Hexachlorodibenzo(p)dioxin	1,2-Dimethylhydrazine
2,3,4,6,7,8-Hexachlorodibenzofuran	2,4-Toluene diisocyante
1,2,3,4,6,7,8-Heptachlorodibenzofuran	Ethyl methanesulfonate
1,2,3,4,7,8-Hexachlorodibenzofuran	Benzoic acid

Table E-1. List of Organic Constituents for Which There are Estimated Emission Rates and No Emission Rates

Constituent of Potential Concern	Constituent of Potential Concern
Without Emission Rates	**Without Emission Rates**
1,2,3,7,8,9-Hexachlorodibenzofuran	Dimethyl sulfate
PCBs [b]	Phthalic anhydride
2,3',4,4',5- Pentachlorobiphenyl	o-Anisidine
3,3',4,4'-Tetrachlorobiphenyl	N-Nitrosodi-n-butylamine
2,3,3',4,4'-Pentachlorobiphenyl	Safrole
3,3',4,4',5,5'- Hexachlorobiphenyl	Ethylene thiourea
2,2',3,4,4',5,5'- Heptachlorobiphenyl	Furfural
2,2',3,3',4,4',5- Heptachlorobiphenyl	Dichloropentadiene
2,3,3',4,4',5- Hexachlorobiphenyl	**Other Heavy Semivolatile Compounds**
2,3,3',4,4',5'- Hexachlorobiphenyl	Azobenzene
3,4,4',5-Tetrachlorobiphenyl	3,3'-Dimethoxybenzidine
2,3,4,4',5- Pentachlorobiphenyl	2-Cyclohexyl-4,6-dinitrophenol
2,3,3',4,4',5,5'- Heptachlorobiphenyl	Captan
2',3,4,4',5- Pentachlorobiphenyl	Pronamide
2,3',4,4',5,5'- Hexachlorobiphenyl	Chlorobenzilate
3,3',4,4',5- Pentachlorobiphenyl	Strychnine
Phthalates	Dimethyl aminoazobenzene
Dimethylphthalate	Pentachlorobenzene
Light Polycyclic Aromatic Hydrocarbons	Hexachlorophene
2-Methyl naphthalene	Hexachlorocyclopentadiene
Heavy Polycyclic Aromatic Hydrocarbons	Hexamethylene-1,5-diisocyanate
Benzo(e)pyrene	3,3-Dichlorobenzidine
Dibenzo(a,e)fluoranthene	1,2,4,5-Tetrachlorobenzene
Dibenzo(a,h)fluoranthene	1,3,5-Trinitrobenzene
Light Substituted Benzene Compounds	**Herbicides and Organochlorinated Pesticides**
4-Nitrophenol	Endothall
Benzyl chloride	Chlordane
n-Propyl benzene	

[a] 2,3,7,8-TCDD requirements will be used to represent emissions of other 2,3,7,8 substituted dioxin and furan compounds.

[b] All coplanar PCBs will be modeled together as 2,3,7,8-TCDD equivalents.

Table E-2. List of Inorganic Constituents for Which There are Estimated Emission Rates [a]

CAS Registry Number	Constituent	CAS Registry Number	Constituent
	Metals		**Non-metals and Anions**
7429-90-5	Aluminum	7664-41-7	Ammonia/Ammonium
7440-36-0	Antimony	24959-67-9	Bromide
7440-38-2	Arsenic	16887-00-6	Chloride
7440-39-3	Barium	57-12-5	Cyanide
7440-41-7	Beryllium	16984-48-8	Flouride
7440-69-9	Bismuth	14280-30-9	Hydroxide
7440-42-8	Boron	7553-56-2	Iodine (I2)
7440-43-9	Cadmium	14797-55-8	Nitrate
7440-70-2	Calcium	14797-65-0	Nitrite
18540-29-9	Chromium (total)	14265-44-2	Phosphate
7440-48-4	Cobalt	7723-14-0	Phosphorous
7440-50-8	Copper	14808-79-8	Sulfate
7439-89-6	Iron	63705-05-5	Total Sulfur
7439-92-1	Lead		**Criteria Pollutants**
7439-93-2	Lithium	124-38-9	Carbon dioxide
7439-95-4	Magnesium	10102-44-0	Nitrogen dioxide
7439-96-5	Manganese	10028-15-6	Ozone
7439-97-6	Mercury	no cas #	Particulate matter
7439-98-7	Molybdenum	7446-09-5	Sulfur dioxide
7440-02-0	Nickel		
7440-09-7	Potassium		
7440-16-6	Rhodium		
7782-49-2	Selenium		
7440-21-3	Silicon		
7440-22-4	Silver		
7440-23-5	Sodium		
7440-25-7	Tantalum		
7440-28-0	Thallium		
7440-31-5	Tin		
7440-33-7	Tungsten		
7440-61-1	Uranium		
7440-62-2	Vanadium		
7440-65-5	Yttrium		
7440-66-6	Zinc		
7440-67-7	Zirconium		

[a] Strontium does not have an emission rate.

Table E-3. List of Radionuclides for Which There are Estimated Emission Rates

CAS Registry Number	Radionuclide	CAS Registry Number	Radionuclide
With Emission Rates		**Without Emission Rates**	
13981-97-0	Barium-137	10045-97-3	Cesium-137
14762-75-5	Carbon-14	15510-73-3	Curium-242
13967-70-9	Cesium-134	15757-87-6	Curium-243
10198-40-0	Cobalt-60	13981-15-2	Curium-244
15585-10-1	Europium-154	14683-23-9	Europium-152
14391-16-3	Europium-155	14336-70-0	Nickel-59
15046-84-1	Iodine-129	13981-37-8	Nickel-63
13994-20-2	Neptunium-237	7440-03-1	Niobium-93
13981-16-3	Plutonium-238	13982-10-0	Plutonium-242
15117-48-3	Plutonium-239	14331-85-2	Protactinium-231
14119-33-6	Plutonium-240	13982-63-3	Radium-226
14119-32-5	Plutonium-241	15262-20-1	Radium-228
10098-97-2	Strontium-90	13967-48-1	Ruthenium-106
14133-76-7	Technetium-99	15715-94-3	Samarium-151
10028-17-8	Tritium	no cas #	Selenium-79
15117-96-1	Uranium-235	15594-54-4	Thorium-229
13982-70-2	Uranium-236	7440-29-1	Thorium-232
10098-91-6	Yttrium-90	15832-50-5	Tin-126
Without Emission Rates		14158-29-3	Uranium-232
14952-40-0	Actinium-227	13968-55-3	Uranium-233
14596-10-2	Americium-241	13966-29-5	Uranium-234
14993-75-0	Americium-243	7440-61-1	Uranium-238
14234-35-6	Antimony-125	15751-77-6	Zirconium-93
no cas #	Cadmium-113		

Supplement 2

Supplement 2
Environmental Performance Demonstration Plan

BNFL Inc.

Document title: **Environmental Performance Demonstration Plan**

Department:	Environmental, Safety, and Health Programs
Contract number:	DE-AC06-96RL13308
Author(s):	Jeffrey R. Markillie, REM
Principal Author Signature	
Document Number:	PL-W375-EN00003, Rev. 1
Checked by:	Gregory S. Normandin
Principal Checker Signature:	
Date of issue:	28 April 2000
Issue status:	Approved
Approved by:	O. Lee Bostic
Approver's position:	Manager, Environmental Safety

Approver's signature

BNFL Inc.
RPP-WTP
3000 George Washington Way
Richland, WA 99352
United States of America
Tel: 509 371 3000
Fax: 509 371 3001

Circulation List

Purpose of issue: 1 For comment
2 For action
3 For information

Name	Location	No of copies	Remarks	Purpose of issue
P.J. Bailey	I162	1		3
J. Rigg	L122	1		3
S. Sharpe	B103	1		2
J. Cook	P-113	1		3
B. Davies	A213	1		3
J. Pope	A215	1		3
G.S.F. Voyles	B105	1		2

History sheet

Rev	Date	Reason for revision	Revised by
A	Dec 1998	Draft for Review	Jeffrey Markillie
B	24 Mar 1999	Draft for Review	Jeffrey Markillie
C	7 May 1999	Draft for Review	Jeffrey Markillie
D	7 Oct 1999	Draft for Review	Jeffrey Markillie
E	13 Dec 1999	Draft for Review	Jeffrey Markillie
F	1 March 2000	Draft for Review	Jeffrey Markillie
0	31 March 2000	Approved	Jeffrey Markillie
1	28 April 2000	Approved	Jeffrey Markillie

Contents

Item — Page Number

History sheet iii

Acronyms and Abbreviations vi

1. Introduction 1
   - 1.1. Regulatory Requirements 1
   - 1.2. Regulatory Guidance 1
   - 1.3. Waste Treatment Process 1
   - 1.4. Environmental Performance Demonstration Approach 2
   - 1.5. RRP-WTP Commissioning Process 2
   - 1.6. Objectives 3
   - 1.7. Environmental Performance Demonstration Report 3
   - 1.8. Demonstration Plan Revisions 3

2. Engineering Description 4
   - 2.1. RPP-WTP Overview 4
   - 2.2. Pretreatment 5
     - 2.2.1. LAW Pretreatment 5
     - 2.2.2. HLW Pretreatment 8
     - 2.2.3. Pretreatment Emissions Control 8
   - 2.3. Low-Activity Waste Vitrification 9
     - 2.3.1. LAW Vitrification System 9
     - 2.3.2. LAW Offgas Treatment System 10
     - 2.3.3. Location and Description of Instrumentation for the Offgas Treatment System 12
   - 2.4. High-Level Waste Vitrification 13
     - 2.4.1. HLW Vitrification System 13
     - 2.4.2. HLW Offgas Treatment System 13
     - 2.4.3. Location and Description of Instrumentation for the Offgas Treatment System 16
   - 2.5. Cascade Ventilation System 16
   - 2.6. Facility Control Philosophy 17

3. New Facility Performance Demonstration 23
   - 3.1. Construction Testing 23
   - 3.2. Acceptance Testing 23
   - 3.3. Operational and Performance Testing 23
   - 3.4. Hot Startup 24

4. Description of Sampling, Monitoring and Analytical Procedures 25

5. Demonstration Schedule 29

Contents

Item — Page Number

6. Performance Demonstration Protocols 30
   6.1. Feed Simulants 30
   6.2. Constituents of Potential Concern 31
      6.2.1. Selection of the Chemical COPCs 31
      6.2.2. Selection of the Radionuclide COPCs 32
   6.3. Principal Organic Dangerous Constituent Selection and Feed Concentration 33
   6.4. Metals Selection, Rationale and Feed Concentration 34
   6.5. Radionuclide Surrogate Selection, Rationale and Feed Concentration 34
   6.6. Quality Assurance 34
7. Fast Shutdown Procedures 36
8. Post-Demonstration Operation 37
9. Anticipated Permit Conditions 38
10. Performance Demonstration Report 39
References 41
Appendix A Completion Schedule ....A-i

FIGURES

Figure 2-1. Location of the RPP-WTP on the Hanford Site 18
Figure 2-2. RPP-WTP Layout 19
Figure 2-3. RPP-WTP Process Flow Diagram 20
Figure 4-1. Sampling Locations for the Environmental Performance Demonstration 26
Figure 6-1. Selection of Constituents of Potential Concern 35

TABLES

Table 2-1. LAW Vitrification Offgas Treatment System Drawings 21
Table 2-2. HLW Vitrification Offgas Treatment System Drawings 22
Table 4-1. Summary of Sampling, Monitoring, and Analysis Procedures 27

Acronyms and Abbreviations

CFR	*Code of Federal Regulations*
COPC	constituent of potential concern
DOE	US Department of Energy
DOE-RL	US Department of Energy, Richland Operations Office
DQO	data quality objective
DRE	destruction and removal efficiency
DST	double-shell tank
DWPA	dangerous waste permit application
Ecology	Washington State Department of Ecology
EPA	US Environmental Protection Agency
EPDP	Environmental Performance Demonstration Plan
HEME	high efficiency mist eliminator
HEPA	high-efficiency particulate air [filter]
HLW	high-level waste
IHLW	immobilized high-level waste
ILAW	immobilized low-activity waste
ICS	integrated control system
LAW	low-activity waste
LERF/ETF	liquid effluent retention facility/effluent treatment facility
NO_x	nitrogen oxide
PCB	polychlorinated biphenyl
PCDD	polychlorinated dibenzo-p-dioxin
PCDF	polychlorinated dibenzofuran
PIC	product of incomplete combustion
PODC	principal organic dangerous constituent
RCRA	*Resource Conservation and Recovery Act of 1976*
RPP-WTP	River Protection Project - Waste Treatment Plant
SBS	submerged bed scrubber
SCR	selective catalytic reduction
SRE	system removal efficiency
TCO	thermal catalytic oxidation
TSD	treatment, storage, or disposal [facility]
TRU	transuranic
VSL	Vitreous State Laboratory
WAC	*Washington Administrative Code*
WESP	wet electrostatic precipitator

1. Introduction

1.1. Regulatory Requirements

An environmental performance demonstration plan (EPDP) is proposed for the River Protection Project - Waste Treatment Plant (RPP-WTP) to demonstrate compliance with the applicable performance standards of *Dangerous Waste Regulations* (WAC 173-303). The focus of the EPDP will be the vitrification miscellaneous treatment units, as defined by WAC 173-303.

1.2. Regulatory Guidance

Incinerator guidance documents and regulations have been used as required for thermal treatment units under the miscellaneous unit provisions of WAC 173-303-680. The recommendations contained in the guidance documents have been modified where appropriate. Due to the differences between incinerators and the RPP-WTP treatment process, this *Environmental Performance Demonstration Plan* incorporates only selected, applicable portions of these regulatory documents.

This EPDP has been designed in accordance with relevant portions of the following documents:

- WAC 173-303-680, "Miscellaneous Units"
- *Guidance on Setting Permit Conditions and Reporting Trial Burn Results* (EPA 1989a)
- *Hazardous Waste Incineration Measurement Guidance Manual* (EPA 1989b)
- *Practical Guide - Trial Burns for Hazardous Waste Incinerators* (EPA 1986)
- *Guidance on Collection of Emissions Data to Support Site-Specific Risk Assessments at Hazardous Waste Combustion Facilities* (EPA 1998b)

1.3. Waste Treatment Process

Mixed waste from the Hanford tank system will be stored and treated in the RPP-WTP. The waste feed is categorized into high-level waste (HLW) feed and low-activity waste (LAW) feed, based on the radioactivity component. The treatment processes are being designed to pretreat both LAW and HLW feed, immobilize the waste feed in a glass matrix through vitrification, and treat the offgas to a level that protects human health and the environment. Two separate melter processes will be used in the vitrification process, one to produce immobilized LAW (ILAW) and the other to produce immobilized HLW (IHLW).

The feed material to these melters is a water slurry of LAW or HLW waste feed, glass formers, reductant (sucrose), and metal oxides and hydroxides. The aqueous component of this slurry is a solution of sodium and other metal salts containing some organic derivatives of tri-butyl phosphate, normal paraffin hydrocarbon, chelating agents and trace amounts of a number of organic compounds.

1.4. Environmental Performance Demonstration Approach

The project plant commissioning organization will be responsible for conducting the environmental performance demonstration, as outlined in this plan. The EPDP will use the "Universal Approach" described in *Guidance on Setting Permit Conditions and Reporting Trial Burn Results* (EPA 1989a). This approach seeks to identify a single set of operating conditions for treating a relatively broad range of waste types. To establish the operating conditions for the RPP-WTP, the following performance demonstrations will be conducted on the LAW and HLW miscellaneous treatment units:

- Destruction and removal efficiency (DRE) test, designed to demonstrate the miscellaneous treatment units' ability to destroy and remove the selected organic compounds as principal organic dangerous constituents (PODCs)

- System removal efficiency (SRE) test, designed to demonstrate the ability of the miscellaneous treatment units to remove metals

Consistent with *Guidance on Collection of Emissions Data to Support Site-Specific Risk Assessments at Hazardous Waste Combustion Facilities* (EPA 1998b), BNFL Inc. may perform a normal operations demonstration. In such a case, the test conditions would reflect long-term facility operations, and would use equipment settings equivalent to those used during actual waste treatment. If the normal operations demonstration is performed, details about integrating it with the testing program will be provided when this plan is updated and submitted to the Washington State Department of Ecology (Ecology), before the commencement of the performance demonstration testing.

The pretreatment component of the RPP-WTP will be permitted as tank systems pursuant to WAC 173-303-640, "Tank Systems". Therefore, the pretreatment system will not be tested as part of the EPDP.

1.5. RRP-WTP Commissioning Process

The LAW vitrification plant is an independent building with its own offgas system and stack, and with three identical vitrification lines. Similarly, the HLW vitrification plant is a separate building with its own ventilation system and stack, and with one vitrification line. There will be two separate environmental performance demonstrations, one for the LAW plant and one for the HLW plant, to be performed during melter commissioning. Only one of the LAW vitrification lines will be tested.

The RPP-WTP will carry out these environmental performance demonstrations in conjunction with the commissioning process, which will consist of the following:

- Cold testing (construction testing, acceptance testing, and operational and performance demonstration testing) resulting in the production of nonradioactive glass products

- Formal review of operational readiness

- Hot startup (the introduction of radioactive material into the miscellaneous treatment units) resulting in the production of radioactive glass products

The environmental performance demonstration activities described in this document form the last stage of cold testing — that is, operational and performance testing. These performance demonstrations will not involve the use of actual radioactive waste. Instead, nonradioactive simulant feeds will be formulated to represent the actual LAW and HLW feeds to be processed by the RPP-WTP. The simulants will contain

selected constituents at concentrations equal to or above those anticipated in the actual LAW and HLW feeds, without exceeding plant design specifications. The fate of each selected constituent will then be measured through the vitrification process.

1.6. Objectives

The environmental performance demonstration has the following objectives:

- Calculate the DRE for selected PODCs.
- Calculate the SRE for selected regulated metals.
- Demonstrate that gaseous hydrogen chloride emissions do not exceed four pounds per hour from the stack.
- Measure selected constituents in the immobilized glass to validate the system mass balance and demonstrate treatment efficiency.
- Demonstrate that particulate matter stack emissions do not exceed 0.08 grains per dry standard cubic foot (180 milligrams per dry standard cubic meter) when corrected for the amount of oxygen in the offgas.
- Measure the products of incomplete combustion (PICs), including polychlorinated biphenyls (PCBs), polychlorinated dibenzo-p-dioxins (PCDDs) and polychlorinated dibenzofurans (PCDFs).
- Determine the emission rates of metal constituents.
- Determine the emission rates of hydrogen chloride and molecular chlorine.
- Recommend an operational envelope based on the SRE and DRE test conditions and results.

1.7. Environmental Performance Demonstration Report

When the environmental performance demonstration data has been analyzed, a detailed report will be developed and submitted to Ecology. This report will describe sampling and analysis activities conducted during the performance demonstration, identify the specific makeup of the simulants, and assess the performance of the LAW and HLW miscellaneous treatment units in relation to the objectives identified in section 1.6. In addition, the report will present proposed operating conditions for key system parameters.

1.8. Demonstration Plan Revisions

This EPDP is intended to provide early information on the approach and expected level of activities. Prior to the start of the environmental performance demonstration, a revised EPDP will reflect any changes arising from new regulations, guidance, sampling and analytical methods, and the final RPP-WTP design.

Design of the RPP-WTP treatment processes is still under way, and information dependent on the final design cannot be included in this document. A completion schedule detailing the missing information, and the date for expected inclusion of this information, is provided in Appendix A.

2. Engineering Description

The RPP-WTP is being developed to treat mixed tank waste stored at the US Department of Energy, Richland Operations Office (DOE-RL) Hanford Site. Waste treatment will be performed using a pretreatment system and two independent vitrification systems. Offgas generated by the pretreatment and vitrification processes will be treated in independent offgas treatment systems. This section provides an overview of the mixed waste treatment processes that will be used in the RPP-WTP. More detailed process information can be found in Chapter 4, section 4.2, of the RPP-WTP Dangerous Waste Permit Application (BNFL 2000a).

The mixed waste to be treated in the RPP-WTP is consistent with the definition of high-level waste found in 10 CFR 72.3. The mixed waste is further classified into LAW feed and a HLW feed.

The LAW feed consists primarily of the aqueous phase supernatant, containing soluble solids presently stored in the Hanford tank system. The HLW feed is primarily an aqueous slurry with a higher solids content than the LAW feed. The composition of the liquid fraction of the HLW feed is similar to LAW feed, whereas the HLW feed solids consist of precipitated metals, and radioisotopes of uranium, plutonium, and strontium.

Two vitrification systems are being designed to immobilize the radioactive waste: one for LAW feed and the second for HLW feed. Waste will be immobilized in the form of glass monoliths contained in metal containers. These IHLW and ILAW containers, and other containers of various secondary wastes generated during treatment operations, will be temporarily stored at the RPP-WTP and then transferred to an appropriate facility for disposal

2.1. RPP-WTP Overview

BNFL Inc. has entered into a contract to pretreat and vitrify radioactive waste stored underground at the Hanford Site, in single-shell and double-shell tanks operated by the Department of Energy (DOE) Office of River Protection. Waste contained in the single-shell tanks will be transferred to double-shell tanks before being transferred to the RPP-WTP.

The LAW and HLW feed will be retrieved and transferred, by DOE or its agent, from the double-shell tanks (DSTs) to facilities designed, built and operated by BNFL Inc. for pretreatment and vitrification. Vitrified immobilized waste and secondary waste generated by the processes will be transferred to permitted storage or disposal units.

DOE is leasing property at the Hanford Site to BNFL Inc. for the construction and operation of the RPP-WTP. The leased land lies at the eastern end of the 200 East Area of the Site, near the former grout treatment facility, 241-AP tank farm complex, and plutonium uranium extraction plant (PUREX). The location of the RPP-WTP on the Hanford Site is shown in Figure 2-1.

Four main process areas will contain most of the dangerous waste management operations, and will include major areas for pretreating HLW and LAW feed, and immobilizing tank waste in the LAW and HLW vitrification plants. Other smaller support buildings, such as the wet chemical storage building, the glass-former storage building, two melter storage buildings and a central waste storage area, will provide for storage or transfer of materials used in the treatment process, and for storage of wastes. The waste treatment plant will store and treat HLW feed and LAW feed from the Hanford Site DST system unit. The treatment processes are designed to pretreat both LAW feed and HLW feed, immobilize waste in a

glass matrix through vitrification, and treat the offgas. Two separate melter or vitrification processes will be used: one to produce ILAW, and the other to produce IHLW. Figure 2-3 provides a simplified process flow diagram of the treatment processes.

2.2. Pretreatment

The RPP-WTP will contain processes for pretreating and immobilizing both LAW feed and HLW feed, as indicated in the simplified process flow diagram shown in Figure 2-3. Characterized LAW and HLW feeds will be transferred from the Hanford tank system to the pretreatment plant. All waste transfers will be made through double-contained transfer pipes with leak-detection systems.

The following four waste feed types, or envelopes, will be treated in the RPP-WTP.

- Envelope A. This LAW feed envelope will contain cesium and technetium at concentrations high enough to warrant their removal during pretreatment, to ensure the ILAW glass meets applicable requirements.

- Envelope B. This LAW feed envelope will contain higher concentrations of cesium than envelope A. Both cesium and technetium will be removed to comply with the specifications for ILAW. This envelope will also contain higher concentrations of chlorine, chromium, fluorine and phosphates, and possibly sulfates, than those found in envelope A, which may limit the rate of waste incorporation into the glass

- Envelope C. This LAW feed envelope will contain organically complexed strontium and transuranic (TRU) compounds, that will require removal in a processing step unique to this waste envelope. As with envelopes A and B, cesium and technetium will also require removal in the pretreatment process to ensure that the ILAW specifications can be met.

- Envelope D. HLW feed envelope will be in the form of a slurry containing 10 to 200 grams of solids per liter of slurry. The liquid fraction of the slurry will be comprised of envelope A, B or C waste, and the solid fraction will be Envelope D waste. Envelope D waste will be delivered via pipeline into a receipt vessel or vessels located in the pretreatment plant.

LAW and HLW feed will first be treated in the pretreatment system. As shown in Figure 2-3, the pretreatment system will be divided into HLW and LAW feed treatment components.

2.2.1. LAW Pretreatment

Pretreatment of the LAW feed will occur in two plants: the pretreatment plant and the LAW pretreatment plant. Process steps include reducing radionuclide concentrations and reducing the volume of waste being fed to the LAW vitrification system. In addition, to ensure that the limits for the concentrations of the following constituents in the ILAW glass will be met, the LAW pretreatment process will remove entrained solids, cesium and technetium and, in the case of envelope C, strontium and TRU compounds. The removed constituents, with the exception of entrained solids, will be incorporated into the HLW melter feed. Entrained solids will either be returned to another permitted unit located at the Hanford Site or will be incorporated in the HLW or LAW melter feed.

2.2.1.1. LAW Feed Receipt

LAW feed will be pumped from the Hanford tank system via a double-walled pipeline into the LAW feed receipt vessels. These six vessels are identical in design and will be located in one cell. Two identical

pipelines, one in operation and the other on standby, will be used for the transfer. Each pipeline will be equipped with a leak detection system. Both rejected LAW feed and entrained solids from LAW ultrafiltration may be returned to the Hanford tank system via these same pipelines.

Each feed receipt pipeline can be routed to any of the six feed receipt vessels. Prior to a transfer, four of the vessels will be designated as the "active" receptors of the LAW feed. The remaining two vessels will be available to provide contingency space to avoid emergency transfers back to the Hanford tank system, in the event of a leak, overflow, or spill from the other vessels. During the transfer, no operations such as mixing may occur in the active vessels, nor may any other transfers be made to or from the active vessels. After delivery completion, the transferred feed volume will be confirmed, and the feed will be sampled and analyzed. Depending on the results of the analysis, the feed will be either transferred to LAW feed evaporation or transferred back to the Hanford tank system. Rejection of a completed feed transfer should never occur, but the option is left open, if confirmation sampling and analyses show that the waste is significantly different from what has been indicated by previous data.

2.2.1.2. LAW Feed Evaporator

The LAW feed stream will be evaporated as needed in the feed evaporator to provide a consistent feed composition for ultrafiltration, in order to minimize the amount of reagents used for strontium and TRU removal (in envelope C) and to optimize ion-exchange performance. This unit will be a continuous forced circulation vacuum evaporator that will concentrate the feed. The LAW feed will be recirculated through the evaporator reboiler until the sodium content of the stream reaches the desired concentration. The concentrated LAW feed will then be pumped to buffer tanks. The vapor stream from the evaporator will be condensed and routed to the process condensate tanks. If the condensate exceeds radioactivity limits, it will be routed to a contaminated condensate vessel and then back to the LAW feed evaporator. If it does not exceed radioactivity limits, it will be routed to a process condensate vessel, from which it may be transferred to the Hanford liquid effluent retention facility/effluent treatment facility (LERF/ETF), recycled as process water or routed to the contaminated condensate vessel.

2.2.1.3. Ultrafiltration

Following evaporation, the concentrated LAW feed will be sent to the ultrafiltration process to separate entrained solids and, in the case of envelope C, to remove strontium and TRU.

The entrained solids for all envelopes will be concentrated, washed to remove soluble components, and then sampled and analyzed to determine their final destination. For envelopes A and B, the permeate from separation of the entrained solids will be transferred to the cesium-exchange process.

After the entrained solids have been removed from envelope C wastes, strontium and TRU elements will be removed by precipitation. The resulting precipitate will be concentrated and washed in the ultrafiltration process before being routed to HLW feed receipt and storage. The separated strontium and TRU precipitate will be mixed with HLW feed and with pretreated cesium and technetium eluates (see section 2.2.1.5 for technetium eluates) from the ion-exchange process. The waste feed will then be incorporated into the HLW melter feed.

Ultimately, the concentrated entrained solids from envelopes A, B and C will either be transferred to a Hanford Site treatment, storage or disposal (TSD) unit or incorporated into the HLW or LAW melter feed.

2.2.1.4. Ion Exchange

To meet ILAW specifications, the radioactive cesium content of the LAW feed must be reduced. Permeate from ultrafiltration will enter the ion exchange system, where the cesium concentration will be reduced by passing the feed through successive ion exchange systems.

The system will have two sets of ion exchange columns arranged in parallel and one final ion exchange column. Each set will consist of two columns arranged in series, one in the lead position and the second in the lag position. One set from each system will process feed, while elution and regeneration take place on the lead column of the other set. When cesium loading on the lead column has reached approximately 50% cesium breakthrough, or when any significant breakthrough is seen after the lag column, the flow to that set of columns will be suspended and the LAW feed diverted to the other set of columns. The final, or trailing, column will function as a third column in series for either pair of main columns during loading.

At this stage, cesium will be removed from the lead column using a nitric acid solution and the resins will be regenerated for reuse. The resin will have a finite useful life, after which it will be removed from the columns and replaced. Spent resin will ultimately be transferred to a Hanford Site TSD facility for disposal. Ion exchange media or resins are discussed further in Chapter 4 of the RPP-WTP DWPA (BNFL 2000a).

Using evaporation, nitric acid will be recovered from the cesium eluate taken from the ion-exchange column. This recovery will allow reuse of recovered nitric acid and will also reduce the storage volume of the intermediate waste. An evaporation system will be used to concentrate the cesium eluate. The resultant concentrates will be stored prior to blending with the pretreated HLW feed, the separated strontium and TRU, and the technetium concentrate (as discussed below).

2.2.1.5. LAW Pretreatment Plant

Following the removal of cesium, the LAW feed will be transferred to the LAW pretreatment plant for removal of technetium in an ion exchange system. The technetium removal system will consist of four ion exchange columns, arranged as two sets of two columns in parallel. One set will operate in the loading cycle while the other set is being regenerated. One set will process feed, while elution and regeneration take place on the lead column of the other set.

When technetium loading on the lead column has reached approximately 50% breakthrough, or a significant proportion of the constituent has been detected in the effluent from its respective lag column, the two columns will be taken offline and the resin in the lead column will be regenerated. At this stage technetium will be eluted with water and the resins will be regenerated for reuse. The resultant technetium concentrates will be routed back to the pretreatment plant where it will be stored prior to blending with cesium concentrates, the pretreated HLW feed, and the separated strontium and TRU.

Resins used in the ion exchange columns cannot be regenerated indefinitely. Therefore, the resin must periodically be removed from the ion exchange columns and replaced. The spent resin collection and dewatering system will fluidize the ion exchange columns, using a flush liquor that hydraulically discharges the contents into spent resin collection vessels. Here, the resin slurry will be circulated, monitored for technetium content, and delivered to a sampling system to determine whether it meets Hanford Site acceptance criteria.

Spent resin that does not meet the criteria will be routed back to the ion exchange columns for re-elution. That which meets the criteria will be transferred to dewatering containers, where water will be removed

before it is transferred to a Hanford Site TSD facility for disposal. Liquor from the dewatering process will be reused as flush liquor for the ion exchange columns.

Following ion exchange, the LAW vitrification feed preparation system will concentrate the waste by evaporation, as needed to reduce the volume that must be processed through the LAW melters. Concentration of the product will be controlled to avoid precipitation of soluble compounds.

The concentrated feed will be discharged to the concentrated LAW melter feed lag storage holding tank. From there it will be transferred to a receipt tank or tanks in the LAW vitrification building. The condensate from the LAW melter feed and LAW feed evaporators will be combined, characterized, and either recycled within the process or transferred to the Hanford LERF/ETF.

2.2.2. HLW Pretreatment

HLW feed will be transferred from the Hanford tank system to the HLW feed receipt tanks. From there, it will be sent to the ultrafiltration vessels, where solids will be concentrated and washed, using either process water or caustic solution, to remove soluble components (mainly sodium salts). The ultrafiltration permeate will be transferred to the LAW pretreatment system and treated in the same manner as the LAW feed. The solids concentrate from the ultrafilter will be stored in the HLW feed lag storage vessels. The washed sludge will be combined with the cesium, technetium, and strontium and TRU which has been removed in the LAW pretreatment system, and will be transferred to the HLW vitrification system.

2.2.3. Pretreatment Emissions Control

Gaseous emissions will be produced within the pretreatment plant and the LAW pretreatment plant, from fluid transfer devices and agitators, exhausters, evaporator overheads, ejector transfers, and filling or emptying of vessels. Pretreatment emissions will be passed into the vessel ventilation system and treated in an emissions treatment system, which will consist of:

- High-efficiency mist eliminators (HEMEs), to remove entrained droplets and particulates.
- Counter-current scrubber, to remove acid gases. Excess scrubber solution will be transferred to the LAW pretreatment system.
- High-efficiency particulate air (HEPA) filtration with preheater.

The LAW pretreatment plant vessel ventilation system will include a volatile organic compound oxidation unit, HEPA filters and carbon bed adsorbers. Primary functions of this system will include:

- Collecting offgas from LAW pretreatment vessel vents
- Removing particulates from vent system offgas
- Preventing condensation in the HEPA filters
- Adsorbing or oxidizing organic gases, or both
- Collecting exhaust streams from LAW pretreatment system reverse-flow diverter and pulse-jet mixer jet pumps

The combined treated vessel ventilation offgas from the LAW pretreatment plant and treated jet pump exhaust streams will be routed to the pretreatment plant. Cleaned pretreatment and LAW pretreatment emissions streams will be monitored for radionuclides and other constituents, and released through the pretreatment building stack.

2.3. Low-Activity Waste Vitrification

The pretreated LAW feed will be processed in three melters, and offgas produced as a result of waste treatment will be treated in an offgas treatment system. The following sections address the LAW vitrification system, offgas treatment systems, waste feed cutoff system and control devices. Figure 2-3 depicts the vitrification and offgas treatment systems.

2.3.1. LAW Vitrification System

The primary functions of the LAW vitrification system are to:

- Convert blended waste slurry and glass-forming chemical additives into molten glass
- Discharge molten glass to metal containers

The LAW glass recipes comprise blends of glass-forming chemical additives: silica, alumina, boric acid, calcium silicate (wollastonite), ferric oxide, lithium carbonate, magnesium silicate (olivine), zircon sand and zinc oxide. Not all of these additives will be used in each recipe. The recipes will be prepared from formulations, developed by Vitreous State Laboratory (VSL), that were found to produce durable glass (VSL 1999). These chemical additives will be stored in silos prior to use. Reductant (sucrose) will be added with the glass-forming chemicals to enhance melter performance.

From the storage silos, dry chemicals will be weighed and transferred into a pneumatic blending silo, which will use compressed air to blend a batch of dry chemicals. Each dry chemical will be weighed, then transferred to the blend hopper. After blending, the glass-formers will be transferred to a feed hopper within the main facility and held until they are required for use. Weighing will be used to confirm dry chemical transfers. Each melter will have a glass-former feed hopper sized for preparation of a melter feed batch, and the entire contents of the feed hopper will be used in the preparation of a melter feed batch.

Following process-related sampling and analysis, the concentrated waste will be combined with glass-forming chemicals and then mixed. This material will be transferred as slurry to the LAW melter feed tanks to provide continuous feed to each of the three melters. Three electric-powered, joule-heated LAW melters will operate in parallel. Each melter will have a nominal throughput capacity of 10 metric tons and a maximum of 16.6 metric tons of glass per day. The operating temperature of the melter will be between 950 °C and 1,250 °C.

As the LAW feed enters the melter, it will form a cold cap of dried solids on the surface of the molten glass. An air agitation system will be used to incorporate the cold cap into the melt and mix it to enhance melter performance. The outer shell of the melter containing the molten glass bath will be water-cooled, to minimize migration of molten glass within the melter refractory and to reduce the heat load to the melter cave.

Feed components will be converted to their respective oxides, and will form the glass melt. As these materials are heated, gases will be released into the melter offgas system. Molten glass will be discharged

into stainless steel containers. The containers will be cooled, welded closed, decontaminated, stored and finally transferred to a permitted disposal unit. The process will yield a durable glass containing ILAW.

2.3.2. LAW Offgas Treatment System

The principal components of the offgas will be nitrogen and oxygen, which will emerge as a result of the controlled introduction of air into the melter, the agitation of the air, and the chemical decomposition reactions occurring in the melter. Water in the feed will be evaporated or flashed to steam in the melter and condensed in the offgas system. Also contained within the offgas will be radionuclides, primarily in the form of aerosols; nitrous oxides generated from the decomposition of nitrates in the waste feed; organic compounds; chloride; fluoride; and sulfur oxides.

The LAW offgas treatment system will treat normal offgas flows and intermittent surges of up to seven times the normal flow rate for condensable gases, such as steam, and up to three times the flow rate for non-condensable gases.

The LAW offgas treatment system will be composed of four components: a primary melter offgas treatment system, a secondary offgas treatment system, a vessel ventilation treatment system, and a standby offgas system.

2.3.2.1. Primary LAW Melter Offgas Treatment System

The primary melter offgas system will cool the offgas and remove the aerosols generated by the melter. It will consist of the following components:

- Film cooler
- Submerged bed scrubber (SBS)
- Wet electrostatic precipitator (WESP)

The following paragraphs describe these components in greater detail.

<u>Film cooler</u>

Offgas will exit the melt chamber and be mixed with compressed air in the LAW melter offgas film cooler. The film cooler will be an integral part of the melter, and will consist of a double-walled pipe designed to introduce steam or air (or a mixture of steam and air) along the walls of the offgas pipe through a series of holes or slots in the inner wall. This process will provide a film of air (or mixture of steam and air) along the pipe wall to cool the offgas. It will also ensure the offgas maintains a high velocity, to prevent most of the aerosols from sticking to pipe walls. In addition, a water spray ring and a mechanical reamer inserted into the offgas discharge line from the melter will be provided to remove buildup, if necessary. Dislodged particulates will either fall back into the melt pool, or be carried into the offgas stream and removed by the SBS.

<u>Submerged bed scrubber</u>

The SBS will remove entrained gross particulate, soluble material and organic components from the offgas, and will also cool the offgas prior to treatment. Offgas will be scrubbed by drawing it through an inlet pipe that will run down through the center of the packed bed, which will be covered with liquid. Gas bubbles formed underneath the packing support plate will be broken up and scrubbed as the gas rises through the packing. Steam generated in the melter will condense in the SBS, and the resulting water

overflow will be directed to the LAW offgas condensate collection vessel. The offgas condensate will be recycled to the pretreatment system.

Wet electrostatic precipitator

After larger aerosols have been removed in the SBS, the cooled offgas will be routed to a WESP. Ionizing electrodes located inside tubes within the WESP will create strong electrical fields that will charge aerosols entrained in the offgas stream. The charged aerosols will adhere to the oppositely-charged tube walls, and will then be washed from the tube walls and collected in the sump, which will drain into the WESP drain collection vessel.

2.3.2.2. Secondary LAW Offgas Treatment System

The secondary LAW offgas treatment system will consist of the following components:

- HEPA filtration unit
- Thermal catalytic oxidation (TCO) unit
- Selective catalytic reduction (SCR) unit
- Caustic scrubber

The following paragraphs describe these components in greater detail.

HEPA filtration

After leaving the WESP, the offgas will pass through the HEPA preheater to raise its temperature above the dewpoint, to prevent condensation as it passes through HEPA filtration. HEPA filters are capable of removing particulates 0.3 micron in diameter and larger, with an efficiency of 99.97 percent.

TCO unit

The offgas will pass through a heater, to raise its temperature to the desired operating range for removal of volatile organics in a TCO unit. This unit will use a precious metal catalyst to facilitate the decomposition of organics to carbon dioxide and water vapor. The treated offgas will be discharged to the SCR unit.

SCR unit

Gaseous nitrous oxide will be removed in a SCR unit and converted to nitrogen and water, using ammonia as the reducing agent. The reaction will occur in catalyst beds within the SCR column. Depending on inlet gas concentration, it will be possible to achieve high nitrous oxide removal efficiencies. The catalyst will be replaced periodically to ensure that offgas treatment adheres to design specifications. The addition of ammonia will be carefully controlled to minimize residual ammonia in the offgas stream.

Caustic scrubber

Offgas exiting the SCR unit will enter a caustic scrubber, where contaminants will be absorbed into a caustic liquid stream flowing counter-current to the offgas. The scrubbing liquid will remove acid gases and carbon-14 (as carbon dioxide) from the offgas. These contaminants will be absorbed into the liquid stream through interaction of the gas, liquid, and scrubber column packing media. To neutralize the

collected acid gases, sodium hydroxide solution will be added to the top of the scrubbing column and will serve as the scrubbing liquid. The scrubbing liquid will be recirculated through the column. After scrubbing, the treated offgas will be monitored and released through the LAW building stack.

2.3.2.3. LAW Vessel Ventilation System

Within the LAW vitrification plant, gaseous emissions will be produced from vessel vents and various equipment related to the LAW melter system. All vessel ventilation lines will be connected to the main vessel ventilation header. This main header will join the primary offgas treatment system lines downstream from the WESP and immediately upstream from the preheater for the secondary offgas system HEPA filters. The combined melter offgas streams and the vessel ventilation offgas stream will then go into the LAW secondary offgas treatment system described above.

2.3.2.4. Alternate Route

Infrequently, each melter may experience a reduction in vacuum, which will actuate an alternate route into the offgas treatment system. The following are abnormal situations that would require diversion:

- Plugging of the air film cooler line from the melter to the SBS
- Melter surge in excess of the design basis of seven times the volume of condensable gases and three times non-condensable gases

Automated gas pressure monitoring, alarm and control devices will detect these conditions. Each LAW melter will have an alternate route into the offgas treatment system. The alternate route will consist of a fast-actuating butterfly valve and a redundant bypass film cooler line from the melter to the SBS.

In the event of a plug developing in the line from the melter to the SBS, or a surge in offgas resulting in reduction of vacuum below the minimum normal set point, the butterfly valve will open the alternate route. Here, air and steam will flow through the bypass film cooler to cool the offgas and minimize the deposition of solids on the pipe wall.

A general power failure is estimated to occur on average once in10 years. In such a situation, the standby generators may take 15 to 30 seconds to come online. During this transition to standby power, the offgas exhaust fans would be without power, and offgas would leak from the melter to the cave. Ventilation air for the melter cell will be subject to all C5 ventilation maximum contamination controls (see section 2.5 for ventilation philosophy) and will be HEPA-filtered to prevent or control the release of emissions during or following such an occurrence.

2.3.3. Location and Description of Instrumentation for the Offgas Treatment System

The location of offgas treatment system temperature and pressure gauges, flow indicators and control devices are shown on the drawings listed in Table 2-1. The drawings are available in supplements 9 and 10 of the RPP-WTP DWPA (BNFL 2000a).

Key instrumentation for the LAW offgas treatment system is being designed. When the instrumentation design has been finalized, a reference table will be included in this section. The table will include information on the key LAW offgas measurement parameters, the instrument number and the associated drawing number. See Appendix A for the proposed information completion schedule.

2.4. High-Level Waste Vitrification

The pretreated HLW feed will be vitrified in one melter. The vitrification plant is being designed with a second HLW melter cave, in case increased waste processing warrants the installation of a second melter.

Offgas produced as a result of HLW vitrification will be cleaned in an offgas treatment system. The following sections address the HLW vitrification system, offgas treatment system, waste feed cutoff system and control devices. Figure 2-3 depicts the HLW vitrification and offgas treatment systems.

2.4.1. HLW Vitrification System

The primary functions of the HLW vitrification system are to:

- Convert blended waste slurry and glass-forming chemical additives into molten glass
- Discharge molten glass to metal containers

The HLW glass recipes comprise blends of glass-forming chemical additives: silica, boric acid, calcium silicate (wollastonite), ferric oxide and lithium carbonate. Not all of these additives will be used in each glass recipe. The glass recipes will be prepared from formulations, developed by VSL, that were found to produce durable glass (VSL 1999).

The glass-forming chemicals will be stocked in storage silos. Each dry chemical will be conveyed from its storage silo, weighed, and then transferred into a pneumatic blending silo, where compressed air will be used to blend dry chemicals for the HLW melter. After blending, the glass-forming chemicals will be transferred to the feed hopper in the main facility until they are required for use. Reductant (sucrose) will be added with the glass-forming chemicals to enhance melter performance. Weighing will be used to confirm dry chemical transfers, once the chemicals have been placed in the feed hopper. The entire contents of the feed hopper will be used in the preparation of a melter feed batch.

Waste feed will be transferred to the HLW melter feed vessel, from which it will be fed directly to the HLW melter. This will have a nominal throughput capacity of 1.5 metric tons per day and a maximum capacity of three metric tons per day. The operating temperature of the melter will be between 950 °C and 1,250 °C. As the HLW feed enters the melter, it will form a cold cap of dried solids on the surface of the molten glass. An air bubbler agitation system will be used to incorporate the cold cap into the melt and mix it to enhance melter performance. The steel outer shell of the melter will be water-cooled to minimize migration of molten glass within the melter refractory and to reduce the heat load to the melter cave.

The feed components will undergo a chemical reaction, be converted to their respective oxides, and form the glass melt. As these materials are heated, gases will be released into the melter offgas system. Molten glass will be discharged to stainless steel containers for cooling, solidification and storage. The process will yield a durable glass containing IHLW.

2.4.2. HLW Offgas Treatment System

The HLW melter offgas will consist of steam, products of chemical decomposition reactions that occur in the melter, organic compounds and radionuclides. Its volume will be smaller than that of the LAW melter offgas and will contain little nitrous oxide; however, it will have a considerably higher radioactivity level.

The HLW offgas treatment system will treat normal offgas flows and intermittent surges of up to seven times the normal flow rate for condensable gases, such as steam, and up to three times the normal flow rate for non-condensable gases. The system will be composed of four components: a primary melter offgas treatment system, a secondary offgas treatment system, a vessel ventilation treatment system, and a standby offgas system.

2.4.2.1. Primary HLW Melter Offgas Treatment System

The primary HLW melter offgas treatment system will consist of the following components:

- Film cooler
- SBS
- WESP
- HEME
- HEPA filtration

The following paragraphs describe these components in greater detail.

Film cooler

Offgas will exit the melt chamber and be mixed with compressed air in the HLW melter offgas film cooler. The film cooler will be an integral part of the melter, and will consist of a double-walled pipe designed to introduce steam or air (or a mixture of steam and air) along the walls of the offgas pipe, through a series of holes or slots in the inner wall. This process will provide a film of air (or mixture of steam and air) along the pipe wall to cool the offgas. It will also ensure the offgas maintains a high velocity, to prevent most of the aerosols from sticking to pipe walls. In addition, a water spray ring and a mechanical reamer inserted into the offgas discharge line from the melter will be provided to remove buildup, if necessary. Dislodged particulates will either fall back into the melt pool, or be carried into the offgas stream and removed by the SBS.

Submerged bed scrubber

The SBS will remove entrained gross particulate, soluble material and organic components from the offgas, and will also cool the offgas prior to subsequent treatment. Offgas will be scrubbed by drawing it into an inlet pipe that will run down through the center of the packed bed, which will be covered with liquid. Gas bubbles formed underneath the packing support plate will be broken up and scrubbed as the gas rises through the packing. Steam generated in the melter will condense in the SBS, and the resulting water overflow will be directed to the HLW offgas condensate collection vessel. The offgas condensate will be recycled to the pretreatment system.

Wet electrostatic precipitator

After the larger aerosols have been removed in the SBS, the cooled offgas will be routed to a WESP. Ionizing electrodes located inside tubes within the WESP will create strong electrical fields that will charge aerosols entrained in the offgas stream. The charged aerosols will adhere to the oppositely-charged tube walls, and will then be washed from the tube walls and collected in the sump, which will drain into the WESP drain collection tank.

High efficiency mist eliminator

The HEME, a demister with a removal efficiency of about 99 percent for aerosols down to submicron size, will further remove aerosols from the melter offgas stream. Aerosols will adhere to fiber-packing filaments within the HEME by surface tension. As the droplets grow they will acquire enough mass to fall by gravity to the bottom of the unit, where they will be collected and drain into the HEME collection tank.

HEPA filtration.

From the HEME, the offgas will pass through the HEPA preheater, where it will be heated to above the dewpoint in order to prevent condensation within the HEPA filters. The HEPA filters are capable of removing particulates of 0.3 micron and greater with an efficiency of 99.97 percent. The cleaned offgas will be discharged to the secondary HLW offgas treatment system.

2.4.2.2. Secondary HLW Offgas Treatment System

The secondary system will consist of the following components:

- Caustic scrubber
- TCO unit

The following paragraphs describe these components in greater detail.

Caustic scrubber

The offgas flow from the HEPA filters will be treated by the HLW offgas caustic scrubber, which will use a sodium hydroxide solution to remove soluble organics, acid gases, nitrous oxide and carbon dioxide (including radioactive carbon-14) from the offgas. The scrubber liquor will be combined with condensate or purge from the HLW melter SBS, and then will be either returned to the LAW feed evaporator, or sampled and transferred to the permitted Hanford LERF/ETF.

Thermal catalytic oxidation unit

After exiting the wet scrubber, the HLW offgas will pass through an electric preheater, to raise its temperature to the desired operating range for removal of residual volatile organics in a TCO. This unit will use a precious metal to facilitate the decomposition of organics to carbon dioxide and water vapor. The treated offgas will be monitored and discharged through the HLW plant stack.

2.4.2.3. HLW Vessel Ventilation Treatment System

Within the HLW vitrification plant, gaseous emissions will be produced from vessel vents and various equipment related to the HLW melter system. All vessel ventilation lines will be connected to the main vessel ventilation header, which will join the HLW offgas treatment system lines downstream from the WESP and upstream from the HEME. The combined melter offgas and vessel ventilation offgas streams will be treated in the remaining portion of the HLW primary and secondary offgas treatment systems.

2.4.2.4. Alternate Route

In the event of a plug developing in the film cooler line from the melter to the SBS, or a surge in offgas that reduces the melter vacuum below the minimum normal set point, a butterfly valve will open the alternate route to the SBS. Air and steam will flow through the bypass film cooler line to cool the offgas and minimize the deposition of solids on the pipe wall.

A general power failure is estimated to occur on average once in 10 years. In such a situation, the standby generators may take 15 to 30 seconds to come online. During this transition to standby power, the offgas exhaust fans would be without power, and offgas would leak from the melter to the cell. Ventilation air for the melter cell will be subject to all C5 ventilation maximum contamination controls (see section 2.5 for ventilation philosophy), and will be HEPA-filtered after power is restored to control the release of emissions. Much of the offgas leaked from a melter during such a short power outage would be recaptured into the melter offgas treatment system after power is restored, because a large portion of the offgas will normally be drawn from the air in the immediate vicinity of the melter.

2.4.3. Location and Description of Instrumentation for the Offgas Treatment System

The locations of offgas treatment system temperature and pressure gauges, flow indicators and control devices are shown on the drawings listed in Table 2-2. The drawings are available in supplements to the RPP-WTP DWPA (BNFL 2000a).

Key instrumentation for the HLW offgas treatment system is being designed. When the instrumentation design has been finalized, a reference table will be included in this section. The table will include information on the key HLW offgas measurement parameters, the instrument number and the associated drawing number. See Appendix A for the proposed information completion schedule.

2.5. Cascade Ventilation System

A primary factor in the design of the ventilation system for the RPP-WTP is the need to isolate the sources of radiation, and radiological and dangerous waste contamination, to protect human health and the environment during normal and abnormal operating conditions. Barriers or barrier systems, including ventilation systems, will minimize the release of radionuclides and contaminants. The ventilation systems are designed to conform to stringent nuclear facility ventilation standards, and fugitive emissions from the pretreatment and vitrification facilities will be minimized.

The pretreatment plant, LAW pretreatment plant, LAW vitrification plant and HLW vitrification plant will be divided into four numbered zones, with the higher number indicating greater contamination potential and therefore a requirement for a greater degree of control or restriction. A separate zoning system for the ventilation systems will be based on the system for classifying building areas for potential contamination. Zones classified as C5 will have the potential for the greatest contamination and will include the pretreatment cells, melter cells, and glass pouring and cooling cells. All C5 zones will be operated remotely. Zones classified as C1 will be those areas that have no risk of contamination, such as equipment rooms and offices.

Confinement will be achieved by maintaining C5 areas at the greatest negative pressure, with airflows cascaded through engineered routes from C2 areas via C3 areas to the C5 areas. The principle of a cascade system, in which air passes through more than one area, effectively reduces the number of separate ventilation streams and hence the amount of air requiring treatment. Adherence to these principles in the design and operation of the RPP-WTP will ensure that the plant will not become a

significant source of radiological or dangerous waste exposure to operators, or emissions to the environment.

2.6. Facility Control Philosophy

This section presents an overall control philosophy for the RPP-WTP, which has the following goals:

- Preservation of worker and public safety
- Protection of the environment
- Preservation of equipment integrity
- Assurance of product quality
- Minimization of plant lifetime costs

Various measures will be taken to achieve these goals.

The possibility of human error in facility operation will be addressed in the design hazards analysis. A simple and consistent operator interface will be developed for use throughout the facility, as follows:

- Automation will be used to optimize throughput and reduce operator radiological exposure. Where necessary, the system will be designed to allow human decisions to maximize throughput, meet product quality or ensure environmental protection.

- Diagnostics will be provided to reduce downtime. (For instance, overload and emergency stop signals will be monitored by the control system).

- Control modes will be simplified and the scope of fallback and recovery control provisions will be reduced to contain operating costs.

- A plant information computer with data entry and reporting capabilities will be provided to support product quality and tracking requirements, and to provide process information needed to optimize plant performance.

- Provisions will be made for overview and scheduling information.

The RPP-WTP requires a combination of batch and continuous monitoring and control. Process equipment will be contained within cells, due to the radioactivity levels of the waste.

The mechanical handling aspects of the RPP-WTP will be, for the most part, at the final stages of processing, and will require sequential control of mechanical equipment. The mechanical handling equipment will be contained within caves. Since direct access to the plant and equipment will not normally be achievable, windows or closed circuit television, or both, will provide a view of the equipment.

Process services, effluent and offgas treatment and ventilation services will require sequence control for startup and shutdown, and continuous monitoring and control.

Figure 2-1. Location of the RPP-WTP on the Hanford Site

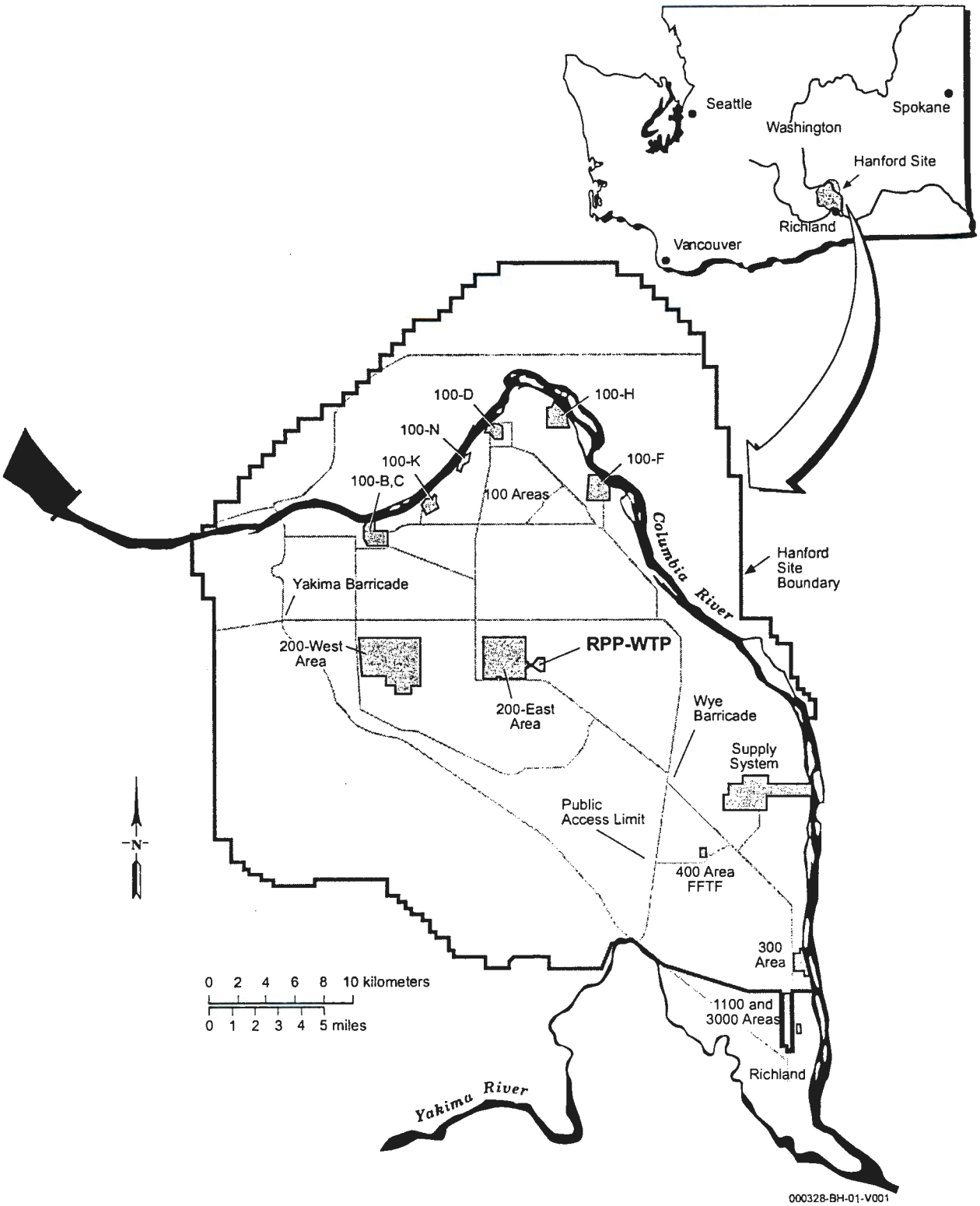

Figure 2-2. RPP-WTP Layout

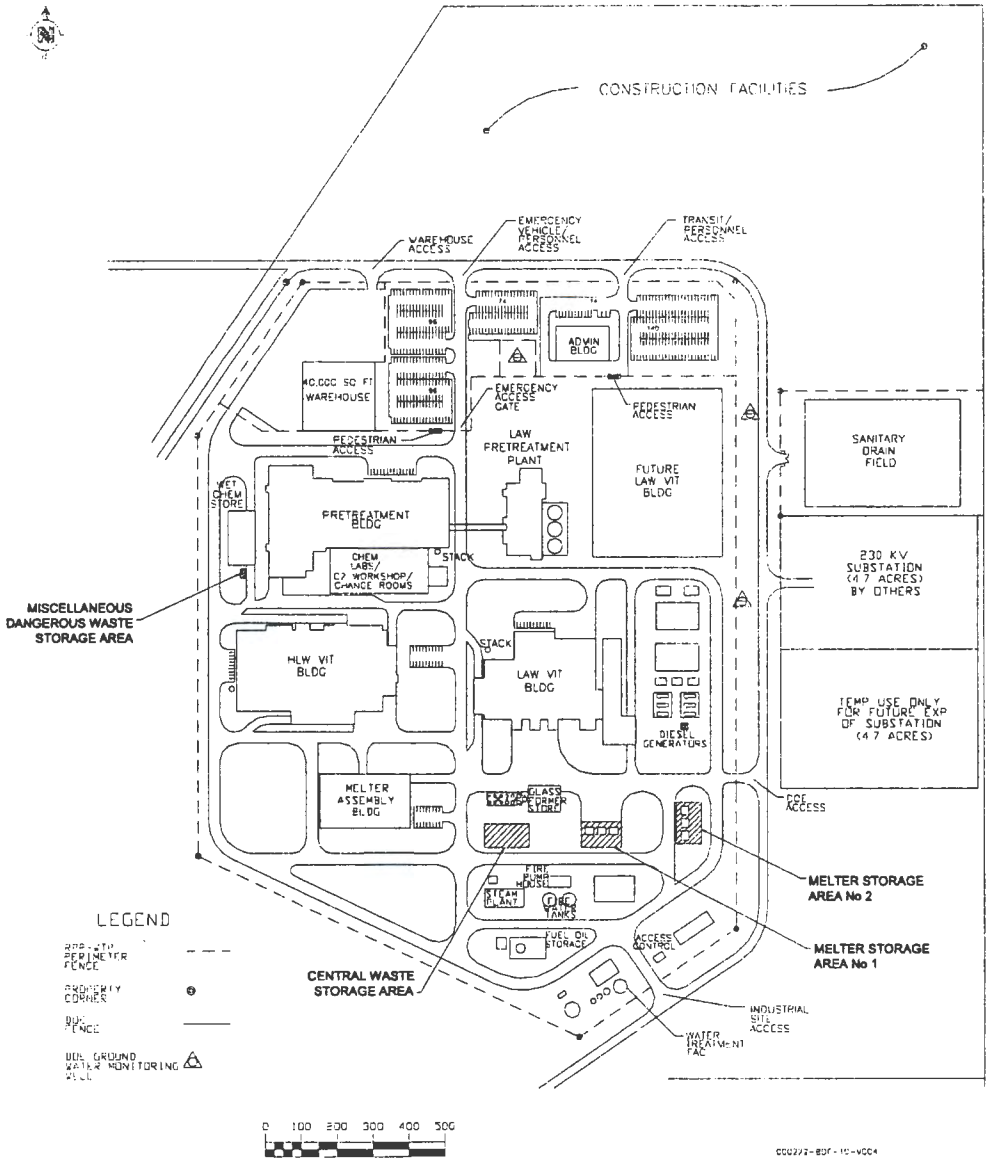

Figure 2-3. RPP-WTP Process Flow Diagram

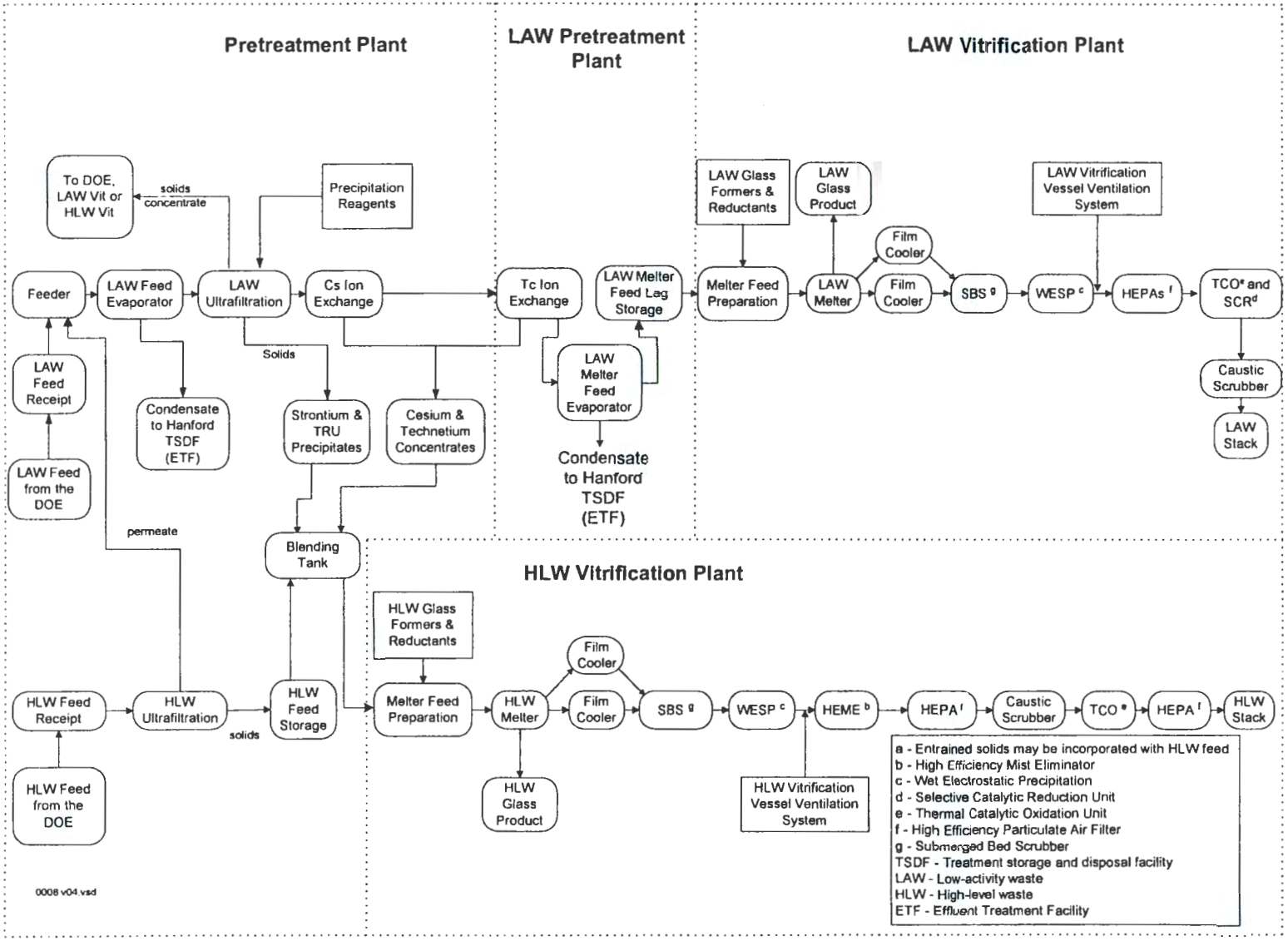

Table 2-1. LAW Vitrification Offgas Treatment System Drawings

Drawing Number	System Number	Title
DWG-W375LV-PR1002	211	LAW Melter 1 Offgas Quenching
DWG-W375LV-PR1003	231/234	LAW Melter 2 Offgas Quenching
DWG-W375LV-PR1004	231/234	LAW Melter 3 Offgas Quenching
DWG-W375LV-PR1005	231/234	Primary and Secondary Offgas Treatment

Table 2-2. HLW Vitrification Offgas Treatment System Drawings

Drawing Number	System Number	Title
DWG-W375HV-PR00031	211	HLW Vitrification-Feed Preparation and Offgas
DWG-W375HV-PR00032	231	HLW Vitrification-Offgas Treatment

3. New Facility Performance Demonstration

This section discusses the cold testing activities associated with the LAW and HLW miscellaneous treatment units. These activities consist of construction testing, acceptance testing, and operational and performance testing.

The environmental performance demonstration will commence during cold testing. Prior to the end of HLW and LAW vitrification system cold testing, a formal review of operational readiness will begin. Hot testing will take place once this formal review has been completed successfully. Once hot testing has been completed successfully, glass production will begin.

Commissioning of the RPP-WTP will be governed by a strategy document, which sets out the safety, quality and managerial arrangements for engineering commissioning of the RPP-WTP. Major components of this document will include:

- Definition of overall objectives
- Definition of commissioning documentation required and a logical hierarchy of documents
- Definition, validation and approval of required commissioning methods and operating instructions
- Identification of procedures and practices to ensure the following:
  - Safety in turnover from construction to operations
  - Safety in implementing the commissioning strategy
  - Safety for operations activities unique to commissioning
- Preparation of management interface methods

3.1. Construction Testing

Construction testing will typically include the initial energization of equipment and instrumentation, and a walkdown of piping to verify that instruments, equipment and piping have been constructed and installed as designed. These tests generally comprise individual component checks, continuity checks and a visual walkdown of systems.

3.2. Acceptance Testing

Completion of acceptance testing represents the formal transition of the LAW and HLW miscellaneous treatment units from construction to operational use. Acceptance testing will typically include testing of components and equipment to ensure that systems have been properly installed. Instrument calibrations will be performed and interlocks tested. Water will be pumped through piping to confirm that the systems perform as designed.

3.3. Operational and Performance Testing

Operational testing will typically involve using first water and then representative non-radioactive simulant feeds, to ensure that the LAW and HLW vitrification systems perform as required to meet the RPP-WTP specifications. Performance testing, including the environmental performance demonstration, will be carried out during operational testing. System feed during the environmental performance demonstration will consist of waste simulant containing PODCs, metals and radionuclide surrogates, as appropriate. The methodology for selecting these PODCs, metals and radionuclide surrogates is discussed in sections 6.3, 6.4, and 6.5, respectively.

Parameters that will control the performance of the LAW and HLW miscellaneous treatment units are currently being defined, in conjunction with technology development which is currently in progress. System parameters that may be used during environmental performance demonstrations (including post-demonstration operations, start-up and normal operations) are also being developed.

In accordance with WAC 173-303-807(1), the duration of the environmental performance demonstration will not exceed 720 hours per plant (LAW and HLW). If necessary, an additional 720 hours per plant may be requested, bringing the total to 1,440 operating hours each, to conclude the LAW and HLW miscellaneous treatment units' environmental performance demonstration.

As the design of the RPP-WTP progresses, additional information will be provided in this section. Information to be provided includes this list of system parameters, which will be provided in tables which will include parameter names, SRE and DRE demonstration values, normal operations and shakedown values, post-demonstration operations values, and comments. Refer to Appendix A for details of the proposed information completion schedule.

3.4. Hot Startup

Hot startup is the introduction of radioactive material into the miscellaneous treatment units. Immobilized waste produced during the hot startup phase will meet appropriate waste form specifications.

As the design of the RPP-WTP progresses, additional information will be provided in this section. Information to be provided includes details on the approach to commissioning the RPP-WTP. Refer to Appendix A for details of the proposed information completion schedule.

4. Description of Sampling, Monitoring and Analytical Procedures

Sampling and monitoring procedures and frequencies for use in the environmental performance demonstration are provided in section 5 of the *Quality Assurance Project Plan for the Environmental Performance Demonstration* (BNFL 2000b). A minimum of four sampling runs will be performed for each test condition, to ensure that at least three successful data-gathering events are completed. Process operating parameters will be monitored using process instrumentation that feeds data into the integrated control system (ICS). Additional process samples will be taken using appropriate methods, as described in *Test Methods for Evaluating Solid Waste*, SW-846 (EPA 1997b), or methods described by the American Society for Testing and Materials. Analytical procedures are presented in section 8 of the *Quality Assurance Project Plan for the Environmental Performance Demonstration* (BNFL 2000b).

A summary of sampling, monitoring and analysis procedures to be used during the EPDP and preliminary locations of the sampling activities is provided in Table 4-1 and in the process flow diagram in Figure 4-2. Sampling locations are indicated in the diagram by numbers 1 through 5. Sampling and analytical parameters include PODCs, metals, radionuclide surrogates, PICs, dioxins, furans, chlorine, hydrogen chloride, gross particulates, oxygen, carbon monoxide, and selected process and secondary waste streams. As the design of the RPP-WTP progresses, additional information regarding final sampling locations will be provided in this section. Refer to Appendix A for details of the proposed information completion schedule.

In addition to the targeted list of constituents undergoing sampling and analysis, the top 30 quantifiable organic peaks noted during gas chromatography/mass spectrometry analysis will be tentatively identified. In addition, all non-target peaks whose values are at least 10 percent of the nearest interval standard will be identified and quantified.

Data and records from the sampling and analytical activities will be retained in the EPDP files. Samples will be stored or disposed of by the laboratory, in accordance with applicable regulations.

Figure 4-1. Sampling Locations for the Environmental Performance Demonstration

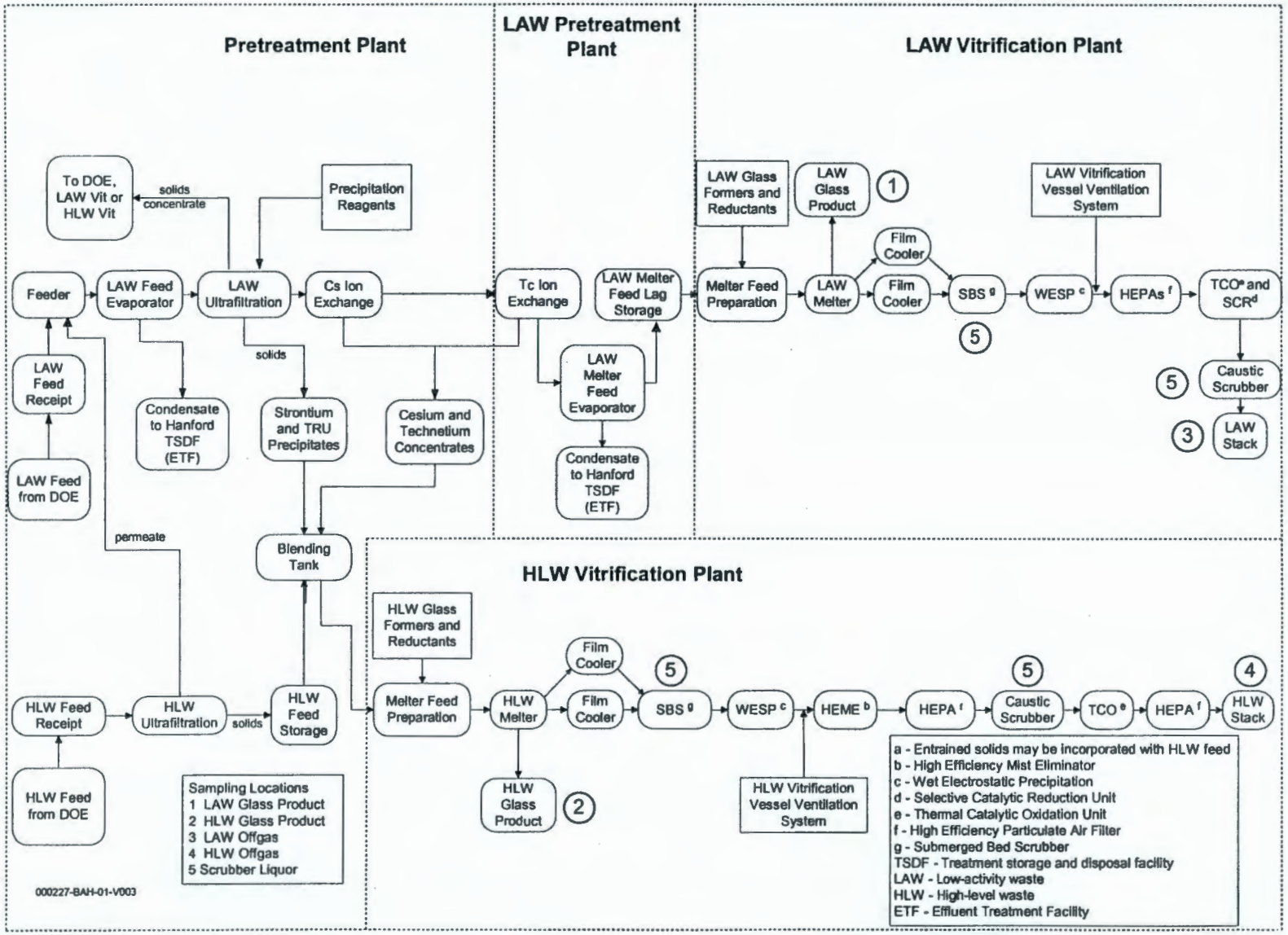

Table 4-1. Summary of Sampling, Monitoring, and Analysis Procedures

Sample Matrix	Analytical Parameter	Sampling Location		SW-846 Sampling Method [a]	Analysis Method [a]		Condition
		Description	Location		SW-846 Method [a]	Technique	
Offgas	Gross particulate (radionuclide surrogates), HCl, and Cl_2	Stack	3, 4	0050	EPA Method 5 [b]		SRE [c] and DRE [d]
					9057	Ion chromatography	
	Volatile organics (organics with boiling point < 30 °C)	Stack	3, 4	0040	8260B	GC/MS	DRE
	PODCs [e]	Stack	3, 4	0031	8260B	GC/MS [f]	DRE
	Volatile organics (organics with boiling point 30-100 °C)						
	Semivolatile organics (organics with boiling point >100 °C)	Stack	3, 4	0010	8270C	GC/MS	DRE
	Total organics: volatile, field GC fraction [g]	Stack	3, 4	0040	-	Bag: field GC/FID [h]	DRE
					-	Condensate: purge & trap GC/FID	
	Total organics: semivolatile, total chromatographic fraction [g]	Stack	3, 4	0010	-	GC/FID	DRE
	Total organics: nonvolatile, gravimetric fraction [g]				-	Gravimetric [g]	DRE
	PCDD, PCDF [i]	Stack	3, 4	0023A	8290	HRGC/HRMS [j]	DRE
	PCBs [k]				1668 [l]	HRGC/HRMS	
	Metals [m]	Stack	3, 4	0060	6010	ICP-AES [n]	SRE
					(Hg by 7470A)		
	O_2, CO_2	Stack	3, 4	EPA method 3A [b]	-	EPA method 3A [b]	SRE and DRE
	Sample and velocity traverses	Stack	3, 4	EPA method 1 [b]	-	EPA method 1 [b]	SRE and DRE
	Offgas velocity and flow rate	Stack	3, 4	EPA method 2 [b]	-	EPA method 2 [b]	SRE and DRE

Table 4-1. Summary of Sampling, Monitoring, and Analysis Procedures

Sample Matrix	Analytical Parameter	Sampling Location		SW-846 Sampling Method [a]	Analysis Method [a]		Condition
		Description	Location		SW-846 Method [a]	Technique	
	Moisture content	Stack	3, 4	EPA method 4 [b]	-	EPA method 4 [b]	SRE and DRE
	CO	Stack	3, 4	Continuous monitoring	-	Continuous monitoring	SRE and DRE
Glass waste form	Metals	Glass product	1, 2	Method TBD [o]	6010	ICP-AES	SRE
					(Hg by 7470A)	-	
	PODCs	Glass product	1, 2	Method TBD [o]	8260B	GC/MS	DRE
	Organics	Glass product	1, 2	Method TBD [o]	Method TBD	TBD	SRE and DRE
Scrubber liquor	PODCs	Location TBD [o]	5	Method TBD [o]	8260B	GC/MS	DRE

[a] Unless otherwise specified, all sampling and analysis methods are from *Test Methods for Evaluating Solid Waste*, SW-846 (EPA 1997b).
[b] 40 CFR Part 60 Appendix A
[c] SRE = system removal efficiency
[d] DRE = destruction and removal efficiency
[e] PODC = principal organic dangerous constituent
[f] GC/MS = gas chromatography/mass spectrometry
[g] *Guidance for Total Organics* (EPA 1996) prepared for EPA by Radian Corporation
[h] GC/FID = gas chromatography/flame ionization detection
[i] PCDD/PCDF = polychlorinated dibenzodioxin/polychlorinated dibenzofuran
[j] HRGC/HRMS = high-resolution gas chromatography/high-resolution mass spectrometry
[k] PCBs = polychlorinated biphenyls (coplanar PCBs and total PCBs)
[l] *Draft Method 1668 Toxic Polychlorinated Biphenyls by Isotope Dilution High Resolution Gas Chromatography/High Resolution Mass Spectrometry* (EPA1997a). This method provides for HRGC/HRMS analysis for 13 dioxin-like coplanar PCBs.
[m] Metals include Sb, As, Ba, Be, Cd, Cr, Pb, Hg, Ni, Se, Ag, Tl. Additional metals that may be included are Al, Cu, Co, Mn, Vn, and Zn.
[n] ICP-AES = inductively coupled plasma-atomic emission spectrometry
[o] TBD = to be determined

5. Demonstration Schedule

Due to the complexity of sampling activities and the need to log data and prepare samples for shipment, one sampling run will be performed on each scheduled test day. A minimum of four sampling runs per demonstration condition will be completed, in order to obtain at least three valid data sets.

As facility design progresses, a detailed schedule of the environmental performance demonstration activities will be developed and included in this section. The schedule will include a day-by-day breakdown of activities, sampling run numbers, estimated sampling durations and timing, and estimates of the quantity of simulants to be used. Refer to Appendix A for the proposed information completion date.

Prior to starting the EPDP, the LAW and HLW miscellaneous treatment units will already have been brought online using validated facility operating procedures. The approach to bringing these units online is presented in section 3. Before starting the environmental performance demonstration, each of the miscellaneous treatment units will be configured in the initial environmental performance demonstration condition and allowed to reach a steady state of operation. This will ensure that the performance of the melter is representative of the specified operating conditions.

Extensive quantities of non-radioactive simulant will be staged to support RPP-WTP commissioning. This staged feed will support systems operability testing, and will serve as a buffer if additional feed material is needed during the environmental performance demonstration. Upon completion of commissioning, any remaining waste simulant will be processed into glass or disposed of, according to applicable regulations.

6. Performance Demonstration Protocols

The environmental performance demonstration protocol will follow the universal approach described in *Guidance on Setting Permit Conditions and Reporting Trial Burn Results* (EPA 1989a) and the recommendations provided in *Guidance on Collection of Emissions Data to Support Site-Specific Risk Assessments at Hazardous Waste Combustion Facilities* (EPA 1998b). The protocol is designed to provide the statistically valid data necessary to support the goals outlined in section 1, and to provide the necessary operational flexibility to treat DST system unit waste. Consistent with the universal approach to permitting, the LAW and HLW miscellaneous treatment units will be demonstrated under the DRE and SRE conditions.

The radioactivity exposure of sampling and analytical personnel must be kept as low as reasonably achievable, in line with ALARA philosophy. Accordingly, non-radioactive waste simulants will be used for the environmental performance demonstration. The following sections describe the waste simulants, the methodologies used to select the chemical and radionuclide constituents of potential concern (COPCs), and the strategies for selecting PODCs, metals, and radionuclide surrogates for use in the simulants.

6.1. Feed Simulants

The EPDP activities will not involve the use of the Hanford tank system waste. The feeds used in testing the LAW and HLW miscellaneous treatment units will be non-radioactive simulants, to avoid exposing personnel involved in sampling and analysis to radioactive and dangerous waste. In addition, because the simulants will be formulated to contain specific quantities and concentrations of known compounds, an extensive waste analysis will not be needed. Demonstrating with simulants will provide a clear indication of how the vitrification systems will perform in the removal, destruction and treatment of radioactive, inorganic and organic COPCs contained in the actual HLW feed and LAW feeds.

The batch of simulants used in each performance demonstration run will be sampled to confirm its makeup. The performance demonstration report will identify the makeup of the simulants used during environmental performance demonstration. Two types of simulants will be developed: one to represent LAW envelopes A, B and C, and another to represent HLW envelope D.

For evaluating the destruction and removal of organic compounds and metals, simulants will be spiked with specific organic and inorganic constituents at known concentrations. The method used for selecting these constituents is discussed in sections 6.3 and 6.4.

For evaluating the treatment of radioactive wastes, simulants will contain non-radioactive substances acting as radionuclide surrogates. The rationale for selecting specific radionuclide surrogates, if used, is discussed in section 6.5.

For the DRE demonstration, the simulant will contain PODCs at known concentrations; and during the SRE demonstration, it will contain metals at known concentrations. The specific makeup of the simulant will be identified in the performance demonstration report.

Enough PODCs and metals will be added to the simulant, without exceeding melter design specifications, to measure the following:

- DRE for each PODC
- SRE for the selected metals
- Gaseous hydrogen chloride and molecular chlorine emissions
- Emissions rates for PCDDs, PCDFs, and PCBs
- Emissions rates of other organic constituents

6.2. Constituents of Potential Concern

The *Human Health Risk Assessment Protocol for Hazardous Waste Combustion Facilities* (EPA 1998a) recommends that the selection of COPCs focus on compounds that have the following characteristics:

- Are likely to be emitted, due to the presence of the compound or its precursors in the waste feed
- Are potential PICs
- Are potentially toxic to humans
- Have a definite propensity for bioaccumulating or bioconcentrating in human and ecological food chains

A listing of the COPCs and a detailed discussion of the COPC selection process can be found in the *Work Plan for Screening Level Risk Assessment for the River Protection Project – Waste Treatment Plant* (BNFL 2000c). The following sections briefly describe the methodology used to identify the chemical and radionuclide COPCs for the RPP-WTP.

6.2.1. Selection of the Chemical COPCs

The process by which the 410 inorganic and organic chemical COPCs were selected is depicted in Figure 6-1. Details of the selection process and a list of the COPCs can be found in the Risk Assessment Work Plan (BNFL 2000c). The list of chemical COPCs was compiled using input from the *Regulatory Data Quality Objectives Supporting Tank Waste Remediation System Privatization Project* (PNNL 1998), the list of PICs identified in Table A-1 of *Human Health Risk Assessment Protocol for Hazardous Waste Combustion Facilities* (EPA 1998a), and the criteria pollutants regulated by the National Ambient Air Quality Standards.

Analytes considered during the data quality objective (DQO) process (PNNL 1998) were selected from a large group of regulated constituents using technically defensible decision logic. This process selected compounds that could plausibly be present in the waste feed, and that could be of concern relative to the risk assessment and permitting activities. A consolidated list of 850 compounds (PNNL 1998, and EPA 1998a) was used as input for the regulatory DQO process. This list of compounds included constituents from the following sources:

- Toxic air pollutant lists, Class A (WAC 173-460-150) and Class B (WAC 173-460-160)
- Underlying hazardous constituents list (40 CFR 268.48)
- Universal treatment standards list (40 CFR 268.48)
- *Double-Shell Tank System Dangerous Waste Permit Application* constituents (DOE-RL 1996)
- DST waste stream profile sheet constituents

The list of 850 compounds was screened, to arrive at a final list consisting of 125 organic and 48 inorganic compounds, which are identified in the Risk Assessment Work Plan (BNFL 2000c). A brief discussion of the methodology and criteria used in the regulatory DQOs to narrow the initial input list is included below. Additional details regarding this process are in the *Regulatory Data Quality Objectives Supporting Tank Waste Remediation System Privatization Project* (PNNL 1998).

The list of 125 organics was based on an evaluation of the following criteria:

- Detectability in the single-shell and double-shell tank waste
- Stability in the DST environment
- Toxicity and carcinogenicity
- Availability of SW-846 analytical methods (EPA 1997b)
- Association with the operations at the Hanford Site

The following tasks were used to establish the list of 48 inorganics:

- Listing the inorganic compounds and metals in the list of 850 compounds
- Consolidating the list of metals and ions
- Comparing the resulting list with the Hanford Site waste inventories
- Considering the applicability of SW-846 analytical methods
- Assessing alternative sources of information

The combined list of 173 organics and inorganics retained by the DQOs was compared with the EPA list of recommended and potential PICs, contained in Table A.1 of *Human Health Risk Assessment Protocol for Hazardous Waste Combustion Facilities* (EPA 1998a). From this comparison, an additional 148 organics were added to the chemical COPCs. These 148 represent constituents that were not already identified as part of the DQO process. An additional 16 PICs were added to the list of COPCs based on results of the bench-scale melter test conducted by VSL (VSL 1999).

At the request of EPA Region 10, an additional 68 organic chemicals were added to the list of COPCs. These were originally eliminated from consideration in the original DQO process, due either to their low toxicity or to their infrequent detection or non-detection in tank waste data.

6.2.2. Selection of the Radionuclide COPCs

The selection process for the 46 radionuclide COPCs is depicted in Figure 6-1. Details of the selection process and a list of these COPCs can be found in the Risk Assessment Work Plan (BNFL 2000c). They were identified based on *Standard Inventories of Chemicals and Radionuclides in Hanford Site Tank Wastes* (Kupfer and others 1997). The information used to establish the global inventories originated from key historical records of various chemical flow sheets that were used in reprocessing irradiated Hanford Site reactor fuels, and from calculations of radionuclide isotope generation and decay. *Predominant Radionuclides in Hanford Site Waste Tanks* (Boothe 1996) provides the basis to consider 40 radionuclides that are estimated to represent over 99 percent of the inherent risks in each of the following five categories:

- Long-term or short-term inhalation hazards
- Long-term groundwater hazards
- Long-term external radiation hazards
- Long-term shielding concerns
- Short-term volatile hazards

An additional six radionuclides (yttrium-90, barium-137m, europium-155, curium-242, curium-243 and plutonium-242) were added to the list of 40 radionuclides, because they are expected to be present in the emissions. The resulting list of 46 radionuclides in the Risk Assessment Work Plan comprises the radionuclide COPCs, which represent over 99 percent of the activity associated with the 177 single-shell and double-shell waste tanks at the Hanford Site.

6.3. Principal Organic Dangerous Constituent Selection and Feed Concentration

PODCs will be selected from the list of COPCs discussed in section 6.2, based on a number of parameters, including heat of combustion (as described in *Thermal Stability-Based Incinerability Ranking* [Taylor and others 1997]), predicted behavior based on thermodynamic calculations, results of small-scale testing and technology demonstrations, preliminary risk assessment results, and Hanford tank waste analytical data.

The RPP-WTP has not yet selected the PODCs that will be measured during the EPDP. As the design of the RPP-WTP progresses, additional information will be provided in this section. Information to be provided includes the selection of PODCs. Refer to Appendix A for details of the proposed information completion schedule.

This section will identify the PODCs to be measured by the environmental performance demonstration and will provide the rationale for their selection. In addition, this section will provide the rationale for establishing the PODC feed rates, which will ensure that feed levels are high enough, in relation to the analytical quantification limits, to demonstrate destruction efficiencies.

The following calculations will be performed for each PODC to determine what quantity must be introduced into the feed stream:

$$Q_{\text{PODC}} = \left(PQL_{\text{PODC}}\right)\left(Q_{\text{offgas}}\right)$$

Where

Q_{PODC} is the emission rate of the PODC at the stack

PQL_{PODC} is the practical quantification limit of the PODC developed during the preliminary risk assessment

Q_{offgas} is the flow rate of the offgas

DRE may be expressed as

$$\text{DRE} = \left(\frac{Q_{\text{feed}} - Q_{\text{PODC}}}{Q_{\text{feed}}}\right)100$$

Where

DRE is the destruction and removal efficiency of the process for the PODC
Q_{feed} is the feed rate of the PODC
Q_{PODC} is the emission rate of the PODC at the stack

Thus,

$$\mathrm{DRE} = \left(1 - \frac{Q_{\mathrm{PODC}}}{Q_{\mathrm{feed}}}\right)100$$

Therefore, the minimum feed rate for each PODC needs to be

$$Q_{\mathrm{feed}} = \frac{Q_{\mathrm{PODC}}}{\left(1 - \frac{\mathrm{DRE}}{100}\right)}$$

$$Q_{\mathrm{feed}} = \frac{\left(PQL_{\mathrm{PODC}}\right)\left(Q_{\mathrm{offgas}}\right)}{\left(1 - \frac{\mathrm{DRE}}{100}\right)}$$

6.4. Metals Selection, Rationale and Feed Concentration

The metals will be selected from the list of 53 inorganic chemicals chosen during the COPC screening process discussed in section 6.2. Ideally, the waste simulant will represent waste to be treated by the RPP-WTP processes. However, if metal concentrations within the waste simulant are not sufficient for accurate measurement within the offgas, it will be spiked with metals from the list of COPCs to determine their fate within the treatment processes of the RPP-WTP. If metal spikes are used during the environmental performance demonstration, the identity and quantity of metals and the concentration of spiking solutions will be discussed in the report. Metal spikes will be obtained from vendors capable of documenting the purity of the spiking solutions. This documentation will be retained in the EPDP project files.

6.5. Radionuclide Surrogate Selection, Rationale and Feed Concentration

To ensure the safety of personnel involved in sampling and analysis, and to achieve the lowest detection limits possible during analysis, the environmental performance demonstration feed will be non-radioactive. Radionuclide surrogates may be used during the environmental performance demonstration, in which case their identity and concentration within the test feed will be presented in this section. If used, the rationale for selecting the radionuclide surrogates will also be presented in this section. Any radionuclide surrogate spikes will be obtained from vendors capable of documenting the purity of the spiking solution. This documentation will be retained in the EPDP files.

6.6. Quality Assurance

The Quality Assurance Project Plan for the Environmental Performance Demonstration (BNFL 2000b) describes in detail the sampling and analytical activities necessary to ensure that valid data will be obtained to evaluate the performance of the LAW and HLW miscellaneous treatment units and to set permit conditions. The RPP-WTP quality assurance program, described in the Quality Assurance Program and Implementation Plan (BNFL 1998), in conjunction with the Quality Assurance Project Plan for the Environmental Performance Program, prescribe the quality assurance system for of the environmental quality assurance activities.

Figure 6-1. Selection of Constituents of Potential Concern

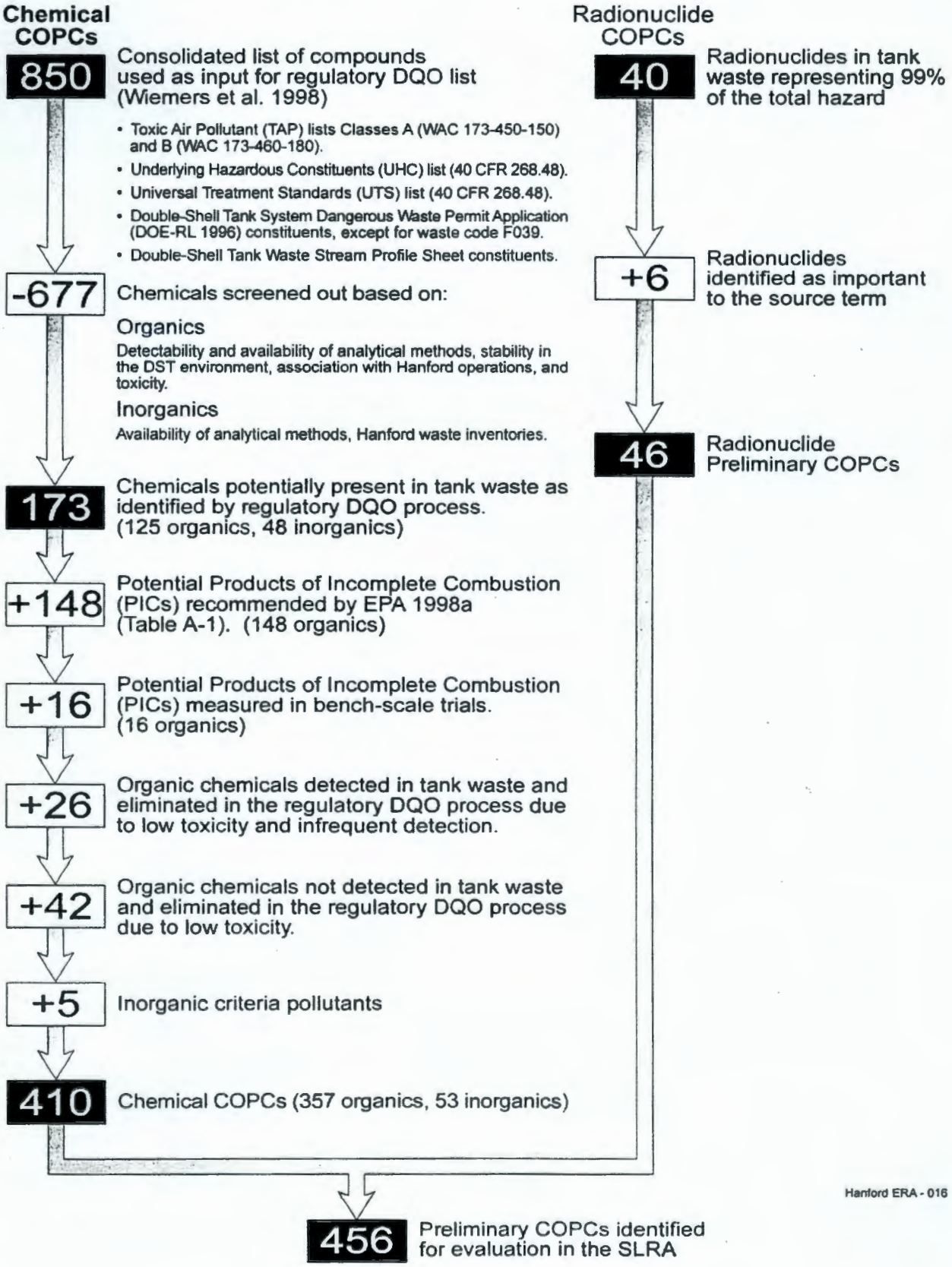

7. Fast Shutdown Procedures

During the performance demonstration, fast shutdown of the LAW and HLW miscellaneous treatment units will be initiated when a likely threat to the health and safety of operating personnel or the environment makes it necessary to terminate operation of the systems as quickly as possible. Fast shutdown will be designed to shut off waste feed promptly.

The automatic waste feed cutoff system will be activated if the ICS monitors any Group A process parameter that exceeds operational limits. Group A parameters are identified in section 1. In the unlikely event that a Group A parameter is exceeded, the waste feed to the melter will be automatically shut off and non-waste material will be introduced in its place, if necessary, to maintain minimum melter operating parameters.

Additional information about fast shutdown will be provided upon completion of design. Refer to Appendix A for the proposed information completion schedule.

8. Post-Demonstration Operation

The limits established by the environmental performance demonstration will define the operational parameters for the HLW and LAW miscellaneous treatment units. The ICS will ensure that waste is fed only while the treatment processes of the RPP-WTP are operating within established parameters. Post-demonstration operating conditions are identified in section 3.3.

9. Anticipated Permit Conditions

An operating specification based on the results of the environmental performance demonstration will accompany the demonstration report. This specification will establish limits for important process parameters to ensure the compliant and flexible operation of the RPP-WTP, and will be presented as expected permit conditions for the miscellaneous treatment units.

Consistent with regulatory guidance, these parameters will be placed into three groups:

- Group A: Continuously-monitored parameters that interlock with the automatic waste feed cutoff system. The waste feed is interrupted automatically when specified limits are exceeded.

- Group B: Parameters that do not require continuous monitoring and are not interlocked with the waste feed cutoff system.

- Group C: Limits for these parameters are set independently of the environmental performance demonstration conditions, and are based on design and operating specifications from the equipment manufacturer. These parameters are considered good operating practices, do not require continuous monitoring, and are not interlocked with the waste feed cutoff.

Desired permit conditions for the LAW and HLW miscellaneous treatment units will be summarized and included in a table to be added to this section when available. The table will list the parameters included in groups A, B and C, limits for each parameter, and any comments for each. Refer to Appendix A for the proposed information completion schedule.

10. Performance Demonstration Report

A report on the RPP-WTP environmental performance demonstration will describe the demonstration in detail, and will include raw data and calculations. This report will be submitted to DOE for review 60 days after the receipt of the analytical data. Following DOE review, the report will be forwarded to Ecology. The report will include the following, consistent with WAC 173-303-807 (6):

- A quantitative analysis of the trial PODCs in the performance demonstration feed.

- A quantitative analysis of the offgas, giving the concentration and mass emissions of the trial PODCs, oxygen, hydrogen chloride, carbon monoxide, and dangerous combustion byproducts. This will include the total mass emission rate of byproducts as a percentage of the total mass feed rate of PODCs fed to the miscellaneous treatment units.

- A quantitative analysis of the scrubber liquor and glass waste forms, to estimate the fate of the trial PODCs and whether they are designated according to WAC 173-303-70.

- A total mass balance of the trial PODCs in the waste.

- Computation of the DRE for each PODC across the HLW and LAW miscellaneous treatment units, using the equation from WAC 173-303-670(4)(a)(i):

$$\mathrm{DRE} = \frac{(W_{\mathrm{in}} - W_{\mathrm{out}}) \times 100\%}{W_{\mathrm{in}}}$$

Where

W_{in} is the mass feed rate of one PODC in the environmental performance feed stream entering the vitrification system

W_{out} is the mass emission rate of the same PODC present in exhaust emissions prior to release to the atmosphere

- Computation of particulate emissions using the following equation from WAC 173-303-670(4)(c)(ii)

$$P_{\mathrm{c}} = \frac{P_{m} \times 14}{21 - Y}$$

Where

P_{c} is the corrected concentration of particulate matter

P_{m} is the measured concentration of particulate matter

Y is the measured concentration of oxygen in the stack gas using the Orstat method for oxygen analysis of dry flue gas

- An identification of sources of fugitive emissions and their means of control.

- A measurement of the average, maximum and minimum temperatures of the miscellaneous treatment units, and velocity of the offgas from these units.

- A continuous measurement of carbon monoxide in the offgas.

- An identification of any existing air emission standards, where Washington State or the Benton County Clean Air Authority have established emissions standards that apply to the miscellaneous treatment units.

- Development of a scale-up factor for three LAW vitrification systems, to be applied in the final risk assessment.

- An assessment of the success in meeting the identified objectives in section 1.6.

The performance demonstration report will also include raw data from all sampling runs (such as printouts from continuous monitors, calibration logs, laboratory quality assurance and quality control data sheets, and chain of custody forms) and desired operating parameters. The report will also explain why any unused data from the sampling runs could not be used.

References

40 CFR 268. *Land Disposal Restrictions*. Code of Federal Regulations.

Boothe GF. 1996. *Predominant Radionuclides in Hanford Site Waste Tanks*, WHC-SD-WM-TI-731, Revision 0, 1996. Westinghouse Hanford Company, Richland, Washington, USA.

BNFL. 1998. *Quality Assurance Program and Implementation Plan*, BNFL-5193-QAP-01, Revision 4, May 1998. BNFL Inc., Richland, Washington, USA.

BNFL. 2000a. *River Protection Project-Waste Treatment Plant Dangerous Waste Permit Application*, BNFL-5193-RCRA-01, Revision 0, 31 March 2000. BNFL Inc., Richland, Washington, USA.

BNFL. 2000b. *Quality Assurance Project Plan for the Environmental Performance Demonstration*, QP-W375-EN00001, Revision 0, 31 March 2000. BNFL Inc., Richland, Washington, USA.

BNFL. 2000c. *Work Plan for Screening Level Risk Assessment for the RPP-WTP*, RPT-W375-EN00001, Revision E, 1 December 1999. BNFL Inc., Richland, Washington, USA.

DOE-RL. 1996. *Double-Shell Tank System Dangerous Waste Permit Application*, DOE/RL-88-21, Revision 8. US Department of Energy, Richland Operations Office, Richland, Washington, USA.

EPA. 1986. *Practical Guide - Trial Burns for Hazardous Waste Incinerators*, EPA/600-2-86. US Environmental Protection Agency, Washington, D.C., USA.

EPA. 1989a. *Guidance on Setting Permit Conditions and Reporting Trial Burn Results*, EPA/625/6-89/019. US Environmental Protection Agency, Washington, D.C., USA.

EPA. 1989b. *Hazardous Waste Incineration Measurement Guidance Manual*, EPA/625/6-89/021. US Environmental Protection Agency, Washington, D.C., USA.

EPA. 1994. *Exposure Guidance for RCRA Hazardous Waste Combustion Facilities*, EPA530-R-94-021. US Environmental Protection Agency, Washington, D.C., USA.

EPA. 1996. *Guidance for Total Organics*, Draft Final Report, EPA/600/R-96/036. US Environmental Protection Agency, Washington, D.C., USA.

EPA. 1997a. *Draft Method 1668 Toxic Polychlorinated Biphenyls by Isotope Dilution High Resolution Gas Chromatography / High Resolution Mass Spectrometry*, March 1997. US Environmental Protection Agency, Washington, D.C., USA.

EPA. 1997b. *Test Methods for Evaluating Solid Waste, Physical Chemical Methods*, SW-846, Third Edition. US Environmental Protection Agency, Washington, D.C., USA.

EPA. 1998a. *Human Health Risk Assessment Protocol for Hazardous Waste Combustion Facilities*, Peer Review Draft, EPA530-D-98-001B. US Environmental Protection Agency, Washington, D.C., USA.

EPA. 1998b. *Guidance on Collection of Emissions Data to Support Site-Specific Risk Assessments at Hazardous Waste Combustion Facilities,* Peer Review Draft, EPA530-D-98-002. US Environmental Protection Agency, Washington, D.C., USA.

Kupfer MJ, Boldt AL, Hodgson KM, Shelton LW, Simpson BC, Watrous RA, LeClair MD, Borsheim GL, Winward RT, Higley BA, and others. 1997. *Standard Inventories of Chemicals and Radionuclides in Hanford Site Tank Wastes,* HNF-SD-WM-TI-740, Revision 9, 1997. Lockheed Martin Hanford Corporation, Richland, Washington, USA.

PNNL. 1998. *Regulatory Data Quality Objectives Supporting Tank Waste Remediation System Privatization Project,* Wiemers ID, Lerchen ME, Miller M, and Meier K, PNNL-12040, December 1998. Pacific Northwest National Laboratory, Richland, Washington, USA.

Taylor P and others. 1997. *Thermal Stability-Based Incinerability Ranking*, August 1997 Update. University of Dayton Research Institute, Dayton, Ohio, USA.

VSL. 1999. *Determination of the Fate of Hazardous Organics During Vitrification of TWRS LAW and HLW Simulants,* Matlock K and Pegg I., Preliminary Data Summary Report, VSL-99R3580-1, 19 February 1999. Vitreous State Laboratory, The Catholic University of America, Washington, D.C., USA

WAC 173-303. *Dangerous Waste Regulations*. Washington Administrative Code.

WAC 173-460. *Controls for New sources of Toxic Air Pollutants*. Washington Administrative Code.

Appendix A
Completion Schedule

Appendix A
Completion Schedule

This *Environmental Performance Demonstration Plan* is intended to provide early information on the demonstration approach and expected level of activities. Design of the RPP-WTP treatment processes is still being developed. As a result, information that depends on the design has not been included in this document. Supplement 8, Completion Schedule, of the RPP-WTP DWPA contains detailed information regarding the missing information.

Supplement 3

Supplement 3
Quality Assurance Project Plan for the Environmental Performance Demonstration Plan

BNFL Inc.

Document title:	**Quality Assurance Project Plan for the Environmental Performance Demonstration**
Department:	Environmental, Safety, and Health Programs
Contract number:	DE-AC06-96RL13308
Author(s):	Jeffrey R. Markillie, REM
Principal Author Signature	
Document Number:	QP-W375-EN00001, Rev. 0
Checked by:	Gregory S. Normandin
Principal Checker Signature	
Date of issue:	31 March 2000
Issue status:	Approved
Approved by:	O. Lee Bostic
Approver's position:	Manager, Environmental Safety

Approver's signature

BNFL Inc.
RPP-WTP
3000 George Washington Way
Richland, WA 99352
United States of America
Tel: 509 371 3000
Fax: 509 371 3001

Circulation List

Purpose of issue: 1 For comment
2 For action
3 For information

Name	Location	No of copies	Remarks	Purpose of issue
P.J. Bailey	I162	1		3
J. Rigg	L122	1		3
S. Sharpe	B103	1		2
J. Cook	P113	1		3
B. Davies	A213	1		3
J. Pope	A215	1		3
G.S.F. Voyles	B105	1		2

History sheet

Rev	Date	Reason for revision	Revised by
A	Dec 1998	Draft for Review	Jeffrey Markillie
B	24 Mar 1999	Draft for Review	Jeffrey Markillie
C	7 May 1999	Draft for Review	Jeffrey Markillie
D	7 Oct 1999	Draft for Review	Jeffrey Markillie
E	13 Dec 1999	Draft for Review	Jeffrey Markillie
F	1 Mar 2000	Draft for Review	Jeffrey Markillie
0	31 March 2000	Final	Jeffrey Markillie

QUALITY ASSURANCE PROJECT PLAN APPROVAL FORM

Title: Quality Assurance Project Plan for the Environmental Performance Demonstration
Project: River Protection Project - Waste Treatment Plant
US Department of Energy, Office of River Protection, Hanford Site

Commitment to Implement this Quality Assurance Project Plan:

A. Dobson Head of Operations and Safety BNFL Inc.	Signature	3 April 2000 Date
G. Voyles RPP-WTP QA Manager BNFL Inc.	Signature	4/3/2000 Date
TBD Performance Demonstration Manager Company TBD	Signature	Date
TBD Sampling Contractor Project Manager Company TBD	Signature	Date
TBD Sampling Contractor QA Manager Company TBD	Signature	Date
TBD Analytical Contractor Project Manager Company TBD	Signature	Date
TBD Analytical Contractor QA Manager Company TBD	Signature	Date

LIST OF QUALITY ASSURANCE PROJECT PLAN RECIPIENTS

Name	Affiliation	Responsibility
A. Dobson	BNFL Inc.	RPP-WTP Head of Operations and Safety
G. Voyles	BNFL Inc.	RPP-WTP QA Manager
TBD	Company TBD	Performance Demonstration Manager
TBD	Sampling Contractor TBD	Sampling Project Manager
TBD	Sampling Contractor TBD	Sampling QA Manager
TBD	Analytical Contractor TBD	Analytical Project Manager
TBD	Analytical Contractor TBD	Analytical QA Manager

Contents

Item — Page Number

Acronyms and Abbreviations ix

1. Introduction 1

2. Project Description 2

2.1. RPP-WTP Overview 2

2.1.1. Description of Dangerous Waste Operations and Processes for Low-Activity Waste Treatment 2

2.1.2. Description of Dangerous Waste Operations and Processes for High-Level Waste Treatment 3

2.2. Environmental Performance Demonstration Program Design 4

3. Environmental Performance Demonstration Organization and Responsibilities 8

4. Quality Assurance and Quality Control Objectives 10

4.1. Quality Objectives 10

4.2. Approach to Environmental Performance Demonstration 10

4.3. Stack Method Quantitation Limits 10

5. Sampling and Monitoring Procedures 13

5.1. Offgas Sampling Location Determination 13

5.2. Offgas Sampling Methods 13

5.2.1. Total Particulate, Hydrogen Chloride, and Molecular Chlorine 13

5.2.2. Volatile Organic Compounds with Boiling Point Less Than 30 °C 14

5.2.3. Volatile Organic Compounds with Boiling Point Between 30 °C and 100 °C 14

5.2.4. Semivolatile Organic Compounds 14

5.2.5. Total Organic Compounds 14

5.2.6. Polychlorinated Dibenzo-p-dioxin, Polychlorinated Dibenzofuran, and Polychlorinated Biphenyls 14

5.2.7. Metals 15

5.2.8. Oxygen and Carbon Dioxide Monitors per Method 3A 15

5.2.9. Particle Size Distribution 15

5.3. Glass Waste Form Sampling and Analysis 15

5.4. Scrubber Liquor Sampling and Analysis 16

5.5. Process and Offgas Continuous Monitoring 16

6. Sample Handling, Traceability, and Holding Times 20

6.1. Sample Containers and Shipping Requirements 20

6.2. Sample Tracking and Management 20

6.3 Chain of Custody 21

7. Calibration Procedures and Frequency 24

7.1. Sampling Equipment 24

Contents

Item — Page Number

7.2. Laboratory Instruments 24
7.2.1. Hydrogen Chloride and Chlorine 24
7.2.2. Volatile Organics 24
7.2.3. Polychlorinated Dibenzo-p-dioxins and Polychlorinated Dibenzofurans 24
7.2.4. Semivolatile Organics 25
7.2.5. Polychlorinated Biphenyls 25
7.2.6. Total Organic Analysis 25
7.2.7. Metals 26

8. Analytical Procedures 28
8.1. Hydrogen Chloride, Chlorine 28
8.2. Volatile Organics 28
8.3. Polychlorinated Dibenzo-p-dioxins and Polychlorinated Dibenzofurans 28
8.4. Polychlorinated Biphenyls 29
8.5. Semivolatile Organic Compounds 29
8.6. Total Organic Analysis 29
8.7. Metals 29

9. Data Reduction, Validation, and Reporting 36
9.1. Data Reporting 36
9.1.1. Analytical Data Packages 36
9.1.2. Analytical Data Results 37
9.1.3. Report Preparation 38
9.2. Data Review 38
9.3. Data Reduction 39
9.3.1. Analytical Data Summary 39
9.3.2. Quality Control Data Summary 39
9.4. Train Total Calculations 40

10. Internal Quality Assurance Control Checks and Frequency 43

11. Performance and System Audits and Frequency 46

12. Preventive Maintenance Procedures and Schedules 48
12.1. Sampling System Maintenance 48
12.2. Laboratory Instrument Maintenance 48

13. Assessment Procedures for Accuracy, Precision, and Completeness 49
13.1. Analytical Accuracy 49
13.2. Analytical Precision 49
13.3. Representativeness 50
13.4. Completeness 50

Contents

Item	Page Number
14. Corrective Action	51
15. Quality Assurance Reporting	52
References	53
Appendix A Completion Schedule	A-i

FIGURES

Figure 2-1. Location of the RPP-WTP on the Hanford Site 6
Figure 2-2. RPP-WTP Process Flow Diagram 7
Figure 3-1. Environmental Performance Demonstration Program Organization 9
Figure 5-1. Sampling Locations for the Environmental Performance Demonstration 17
Figure 6-1. Example Chain-of-Custody Form 22
Figure 9-1. Internal Data Review Flowchart 41
Figure 9-2. Data Validation and Review Flowchart 42

TABLES

Table 4-1. Precision and Accuracy Objectives for Critical Measurements 11
Table 5-1. Sampling Procedures, Equipment, and Methods 18
Table 6-1. Sampling Containers, Preservatives, and Holding Times 23
Table 7-1. Sampling Equipment Calibration Procedures 27
Table 8-1. Summary of Analytical Procedures 30
Table 8-2. Volatile Compound Target Contaminant List 31
Table 8-3. Polychlorinated Dibenzo-pdioxins and Polychlorinated Dibenzofurans 32
Table 8-4. Polychlorinated Bi-phenyls Target Contaminant List 33
Table 8-5. Semivolatile Organic Compound Target List 34
Table 8-6. Metals Target List 35
Table 10-1. Field Checks of Sampling Equipment 44
Table 10-2. Quality Assurance Samples for Performance Demonstration of Each Melter System Under Each Condition 45

Acronyms and Abbreviations

ASTM	American Society for Testing and Materials
CFR	*Code of Federal Regulations*
CVAA	cold vapor atomic absorption spectrometry
DRE	destruction and removal efficiency
DST	double-shell tank
DWPA	dangerous waste permit application
Ecology	Washington State Department of Ecology
EPA	US Environmental Protection Agency
EPDP	environmental performance demonstration program
GC	gas chromatography
GC/ECD	gas chromatography electron capture device
GC/FID	gas chromatography/flame ionization detection
GC/MS	gas chromatography/mass spectrometry
HEPA	high efficiency particulate air (filter)
HLW	high-level waste
HRGC	high-resolution gas chromatography
HRMS	high-resolution mass spectrometry
ICAP	inductively coupled argon plasma
ICP	inductively coupled plasma
ICP-AES	inductively coupled plasma-atomic emission spectrometry
IDL	instrument detection limit
IHLW	immobilized high-level waste
ILAW	immobilized low-activity waste
LAW	low-activity waste
MDL	method detection limit
MS	mass spectrometry
NO_x	nitrogen oxides
PCB	polychlorinated biphenyl
PCDD	polychlorinated dibenzo-p-dioxin
PCDF	polychlorinated dibenzofuran
PIC	product of incomplete combustion
PM	particulate matter
PODC	principal organic dangerous constituent
PQL	practical quantitation limit
PUREX	Plutonium Uranium Extraction Plant

QA	quality assurance
QAPjP	*Quality Assurance Project Plan*
QC	quality control
RPD	relative percent difference
RPP-WTP	River Protection Project - Waste Treatment Plant
SMVOC	sampling method for volatile organic compounds
SRE	system removal efficiency
SRM	standard reference material
TCO	total chromatographable organics
TRU	transuranic
TSD	treatment, storage, or disposal facility
VOST	volatile organic sampling train
WAC	*Washington Administrative Code*

1. Introduction

This Quality Assurance Project Plan (QAPjP) will support the environmental performance demonstration program (EPDP) for the River Protection Project - Waste Treatment Plant (RPP-WTP), described in the *Environmental Performance Demonstration Plan* (BNFL 2000a), by providing the quality assurance (QA) component of the program. This document describes the testing and analytical activities necessary to ensure that the environmental performance demonstration data will be valid for evaluating process performance and setting permit conditions. The Quality Assurance Project Plan was prepared using the US Environmental Protection Agency's (EPA) *Interim Guidelines and Specifications for Preparing Quality Assurance Project Plans* (EPA 1983), *Preparation Aids for the Development of Category II Quality Assurance Project Plans* (EPA 1991), and *Guidance on Collection of Emissions Data to Support Site-Specific Risk Assessments at Hazardous Waste Combustion Facilities* (EPA 1998a).

This QAPjP, supporting the EPDP, is intended to provide early information on the approach and expected level of activities. Prior to the start of the environmental performance demonstration, a revised QAPjP will reflect any changes arising from new regulations, guidance, sampling and analytical methods, and the final RPP-WTP design.

2. Project Description

This section presents an overview of the RPP-WTP treatment process and provides a synopsis of the EPDP design.

2.1. RPP-WTP Overview

The US Department of Energy is leasing property at the Hanford Site to BNFL Inc. for construction and operation of the RPP-WTP. The leased land lies at the eastern end of the 200 East Area of the Hanford Site, near the former Grout Treatment Facility, 241-AP Tank Farm Complex, and Plutonium Uranium Extraction Plant (PUREX). The location of the RPP-WTP is provided in Figure 2-1.

Mixed waste from the Hanford Site double-shell tank (DST) system unit will be stored and treated in the RPP-WTP. The waste is categorized into high-level waste (HLW) feed and low-activity waste (LAW) feed based on the radioactivity component. The treatment processes are being designed to pretreat both LAW feed and HLW feed, immobilize the feed in a glass matrix through vitrification, and treat the offgas to a level protective of human health and the environment. Two separate melter processes will be used in the vitrification process, one to produce immobilized LAW (ILAW) and the other to produce immobilized HLW (IHLW). These processes are briefly described in the sections below. A process flow diagram for the RPP-WTP is provided in Figure 2-2.

2.1.1. Description of Dangerous Waste Operations and Processes for Low-Activity Waste Treatment

The LAW treatment process to be demonstrated in the environmental performance demonstration program encompasses the LAW vitrification units (which are regulated as miscellaneous treatment units under WAC 173-303) and their associated offgas treatment systems.

Information about waste receipt and the pretreatment system is provided to enable the reader to understand the RPP-WTP operations. Additional details about waste acceptance and waste characteristics are provided in Chapter 3 of the *RPP-WTP Dangerous Waste Permit Application* (BNFL 2000b); detailed process information and equipment descriptions are provided in Chapter 4 of the same.

The RPP-WTP will receive characterized LAW feed, which will be staged prior to pretreatment. The LAW feed will be pretreated through a multi-step process, including evaporation, to reduce the volume of the waste feed; ultrafiltration to remove strontium, transuranic (TRU) elements, and entrained solids; ion exchange to remove cesium and technetium. A second cycle of waste feed evaporation is performed prior to transferring the feed to a vitrification melter. The process flow for the LAW waste feed is illustrated in Figure 2-2.

In the LAW vitrification process, the waste feed will be mixed with glass formers and reductants, and pumped to the melter where it will form a cold cap of dried solids. The cold cap will eventually be incorporated in the molten glass. Each of the three LAW melters will have a nominal capacity of approximately 10 metric tons and maximum capacity of 16.6 metric tons of ILAW per day. Feed components will undergo chemical reaction, be converted to their respective oxides, and be dissolved in the molten glass. As the feed is heated in the LAW melter, steam and gases will be released to the offgas treatment system. The molten glass will be discharged to metal containers for cooling, solidification, storage, and transfer to a designated treatment, storage, or disposal (TSD) facility.

Offgas from the LAW melters will be treated to a level protective of human health and the environment. Offgas will pass through a film cooler and a submerged bed scrubber, before entering the wet electrostatic precipitator and high efficiency particulate air (HEPA) filtration for particulate removal. Thermal catalytic oxidation, selective catalytic reduction, and caustic scrubbing will remove acid gases, nitrogen oxides (NO_x), and organic constituents. The cleaned offgas will be monitored prior to release through the LAW plant stack. Details are provided in Chapter 4 of the *River Protection Program – Waste Treatment Plant Dangerous Waste Permit Application* (BNFL 2000b).

2.1.2. Description of Dangerous Waste Operations and Processes for High-Level Waste Treatment

The HLW treatment process that is to be demonstrated in the environmental performance demonstration program encompasses the HLW vitrification unit (which is regulated as a miscellaneous treatment unit under *Washington Administrative Code* [WAC] 173-303) and its associated offgas treatment systems.

Information about waste receipt and the pretreatment system, is provided to enhance the understanding of the planned RPP-WTP operations. Additional details about waste acceptance and waste characteristics are provided in Chapter 3 of the *River Protection Program – Waste Treatment Plant Dangerous Waste Permit Application* (DWPA) (BNFL 2000b); detailed process information and equipment descriptions are provided in Chapter 4 of the same.

Characterized HLW feed will be received by the RPP-WTP and enter a pretreatment process. The feed will pass through an ultrafiltration unit. Permeate from the ultrafiltration unit will be combined with the LAW feed. The remaining slurry will be treated and blended with the cesium and technetium concentrates from the ion exchange system, and also blended with strontium and TRU precipitates that have been separated from the LAW feed will also be blended into the slurry. The slurry of ultrafiltration solids, TRU/strontium precipitates, cesium and technetium concentrates from the ion exchange system will be blended with glass-forming chemicals and fed into the HLW melter.

The HLW melter will have a nominal capacity of approximately 1.5 metric tons and a maximum capacity of 3.0 metric tons of glass per day. The feed components will undergo chemical reaction, be converted to their respective oxides, and be dissolved in the molten glass. As the feed is heated, steam and gases will be released to the offgas treatment system. The molten glass will be discharged to metal containers for cooling, solidification, storage, and transfer for disposition.

Offgas from the HLW melter will be treated to a level protective of human health and the environment. Offgas will pass through a film cooler and a submerged bed scrubber before passing through a wet electrostatic precipitator and a high efficiency mist eliminator, and HEPA filter. Particulates will be removed in these processes. The offgas then passes through a caustic scrubber for removal of acid gases, NO_x, and carbon dioxide (CO_2), including carbon dioxide with carbon 14 radioisotope ($^{14}CO_2$). Organics will be removed using thermal catalytic oxidation. The cleaned offgas will be treated by HEPA filtration and monitored prior to release through the HLW plant stack.

The pretreatment component of the RPP-WTP will be permitted as tank systems per WAC 173-303-640. The pretreatment system will not be tested as part of the EPDP.

2.2. Environmental Performance Demonstration Program Design

An environmental performance demonstration program is proposed for the RPP-WTP to demonstrate compliance with applicable standards of WAC 173-303-680, and to provide emissions data for use in the risk assessment being developed in support of the DWPA (BNFL 2000b).

Incinerator guidance documents and regulations have been used as required for thermal treatment units under the miscellaneous unit provisions of WAC 173-303-680. The recommendations contained in the guidance documents have been modified where appropriate. Due to the differences between incinerators and the RPP-WTP treatment process, the *Environmental Performance Demonstration Plan* incorporates only selected, applicable portions of these regulatory documents.

The EPDP has been designed in accordance with applicable portions of the following documents:

- WAC 173-303-680. "Miscellaneous Units", *Dangerous Waste Regulations*
- *Guidance on Setting Permit Conditions and Reporting Trial Burn Results* (EPA 1989a)
- *Hazardous Waste Incineration Measurement Guidance Manual* (EPA 1989b)
- *Practical Guide - Trial Burns for Hazardous Waste Incinerators* (EPA 1986)
- *Guidance on Collection of Emissions Data to Support Site-Specific Risk Assessments at Hazardous Waste Combustion Facilities* (EPA 1998a)

The EPDP will use the "universal approach" to permitting described in *Guidance on Setting Permit Conditions and Reporting Trial Burn Results* (EPA 1989a). With this approach, a single set of operating conditions will be sought for treating a broad range of wastes. To establish a set of operating conditions, the following worst-case performance demonstrations will be performed on the LAW and HLW miscellaneous treatment units:

- A destruction and removal efficiency (DRE) test designed to demonstrate the ability of the RPP-WTP treatment systems to destroy and remove organic compounds as Principle Organic Dangerous Constituents (PODC's)
- A system removal efficiency (SRE) test designed to demonstrate the ability of the plant treatment systems to remove metals.

Consistent with *Guidance on Collection of Emissions Data to Support Site-Specific Risk Assessments at Hazardous Waste Combustion Facilities*, BNFL Inc. may perform a normal operations demonstration. In such a case, the test conditions would reflect long-term facility operations, and would use equipment settings equivalent to those used during actual waste treatment. If the normal operations demonstration is performed, details about integrating it with the testing program will be provided when this plan is updated and submitted, along with the *Environmental Performance Demonstration Plan*, to the Washington State Department of Ecology (Ecology), before the EPDP program is implemented.

The EPDP has the following objectives:

- Calculate the DRE for selected PODCs.

- Calculate the SRE for selected regulated metals.

- Demonstrate that gaseous hydrogen chloride emissions do not exceed four pounds per hour from the stack.

- Measure selected constituents in the immobilized to validate the system mass balance and demonstrate treatment efficiency.

- Demonstrate that particulate matter stack emissions do not exceed 180 milligrams per dry standard cubic meter or 0.08 grains per dry standard cubic foot, when corrected for the amount of oxygen in the offgas.

- Measure the products of incomplete combustion (PICs) including polychlorinated biphenyls (PCBs), polychlorinated dibenzo-p-dioxins (PCDDs) and polychlorinated dibenzofurans (PCDFs).

- Determine emission rates of metal constituents.

- Determine emission rates of hydrogen chloride and molecular chlorine.

- Recommend an operational envelope based on the SRE and DRE test conditions.

The LAW vitrification plant is an independent building with its own off-gas system and stack. The HLW vitrification plant similarly is a separate building with its own ventilation system and stack. There will , therefore, be two separate environmental performance demonstrations. The LAW plant has three identical vitrification lines. The demonstration test will be performed during melter commissioning. The RPP-WTP will carry out these environmental performance demonstrations in conjunction with the commissioning process. The commissioning process will consist of the following:

- Cold testing (construction testing, acceptance testing, and operational and performance demonstration testing)

- Formal review of operational readiness

- Hot startup (the introduction of radioactive material into the miscellaneous treatment units)

When analyses of the EPDP's data has been completed, a detailed performance demonstration report will be developed and submitted to Ecology. The performance demonstration report will describe sampling and analysis activities conducted during the EPDP, identify the specific makeup of the demonstration feeds, and assess the performance of the LAW and HLW treatment systems in relation to the objectives identified above. In addition, the report will present proposed operating conditions for key system parameters.

Figure 2-1. Location of the RPP-WTP on the Hanford Site

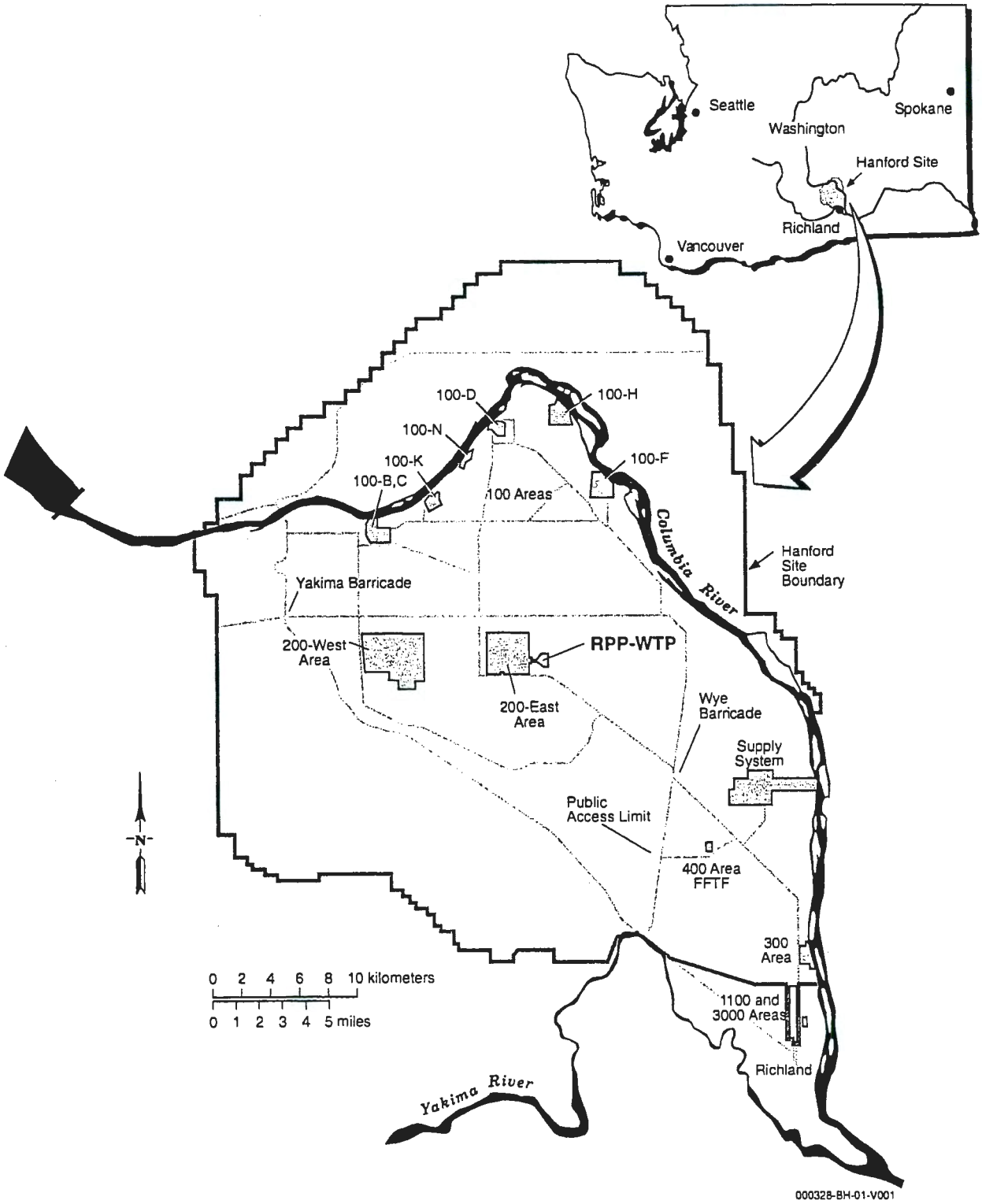

Figure 2-2. RPP-WTP Process Flow Diagram

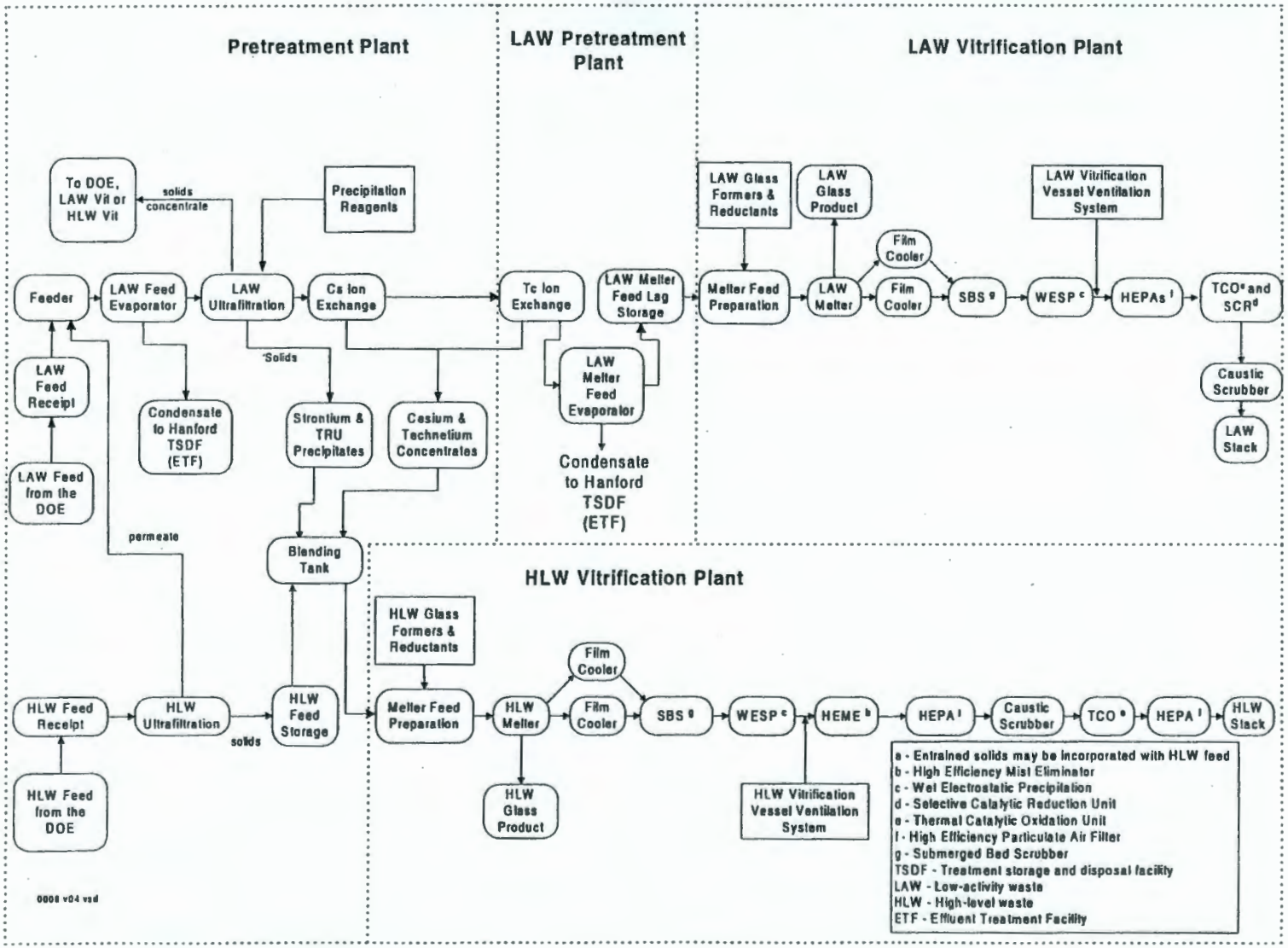

3. Environmental Performance Demonstration Organization and Responsibilities

The organization for the EPDP is expected to resemble the one shown in Figure 3-1. Any future changes to the organizational structure are not expected to have a significant impact on implementing this QA project plan. The RPP-WTP operations manager, supported by the RPP-WTP QA manager, facility manager, and environmental manager, will be responsible for the overall execution of the EPDP and the integration of the program into the facility's operational activities. The environmental performance demonstration manager will coordinate the sampling and analytical activities, and will be responsible for ensuring that EPDP's activities are conducted in strict accordance with the approved QA project plan. The RPP-WTP QA manager will provide QA oversight throughout the EPDP.

A team will be created to plan the details of the EPDP. The team will be composed of representatives from the analytical and sampling contractors, data validators, environmental staff, plant operators, and management. Internal communications between team members will clearly identify their roles and responsibilities, their authority to direct members of the groups they represent, the work to be accomplished, and the level of accuracy to be achieved.

All participants of the environmental performance demonstration will be involved in the planning process. This will ensure cooperative working relationships and an awareness of the importance of a successful demonstration.

The emissions sampling and analyses will be conducted by contractors under the direction of the environmental performance demonstration manager. The sampling contractor will be responsible for offgas sampling (including the arrangements to transfer the samples to the contracted analytical laboratory), analysis, data review, and reporting tasks.

Process samples, other than offgas samples, will either be taken by RPP-WTP personnel or under RPP-WTP staff supervision. Members of the sampling contractor's team may also take needed process samples when assisted by RPP-WTP personnel. The sampling contractor's field leader will take custody of the process samples for transfer to the contracted analytical laboratory. The RPP-WTP manager will be responsible for operation of the continuous process monitors used to collect data.

The QA managers from the sampling contractor and the RPP-WTP will be responsible for conducting periodic checks to verify that sampling and laboratory activities are performed with QA requirements and project procedures. The analytical contractor's manager and QA manager will support the sampling contractor, environmental performance demonstration manager, and RPP-WTP manager in all sampling and analytical procedures.

All members of the EPDP team will have the required training and experience as set forth in RPP-WTP training program (BNFL 2000c). Sampling team members who require unescorted access to sampling locations will be trained in accordance with the RPP-WTP training program (BNFL 2000c).

The RPP-WTP QA manager will provide a QA review of the activities associated with the EPDP. The RPP-WTP QA manager, or a designated representative, will inspect the sampling activities and manage analytical laboratory compliance with this plan. Stack sampling and analytical reports will be reviewed for completeness and accuracy by independent data validators.

Figure 3-1. Environmental Performance Demonstration Program Organization

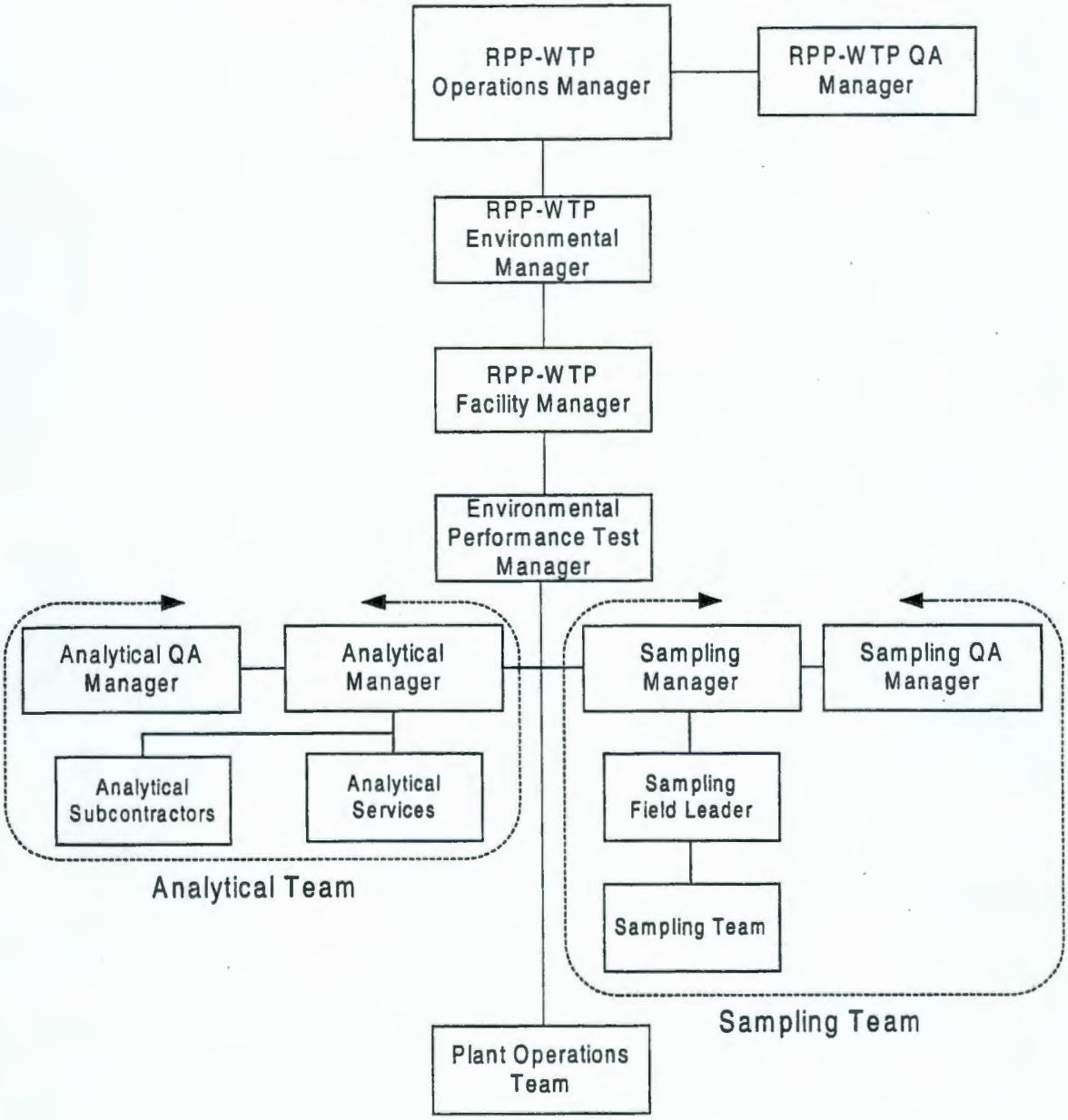

4. Quality Assurance and Quality Control Objectives

Laboratory service providers, suppliers, and QA documents will be approved by the RPP-WTP QA manager before EPDP's contracts are awarded. It is anticipated that EPDP's measurements will be made using the most recent methods from these sources: *Test Methods for Evaluating Solid Waste,* (EPA 1997a), and 40 CFR 60 Appendix A. The following sections identify quality objectives for critical measurements, approaches to sampling, and measurements of quantitation limits associated with the EPDP.

4.1. Quality Objectives

Table 4-1 presents the precision and accuracy objectives for critical measurements that will be made during the EPDP.

4.2. Approach to Environmental Performance Demonstration

The proposed EPDP will be performed on the LAW and HLW miscellaneous treatment units to demonstrate the objectives identified in section 2.2. Three data sets are required for each demonstration condition (EPA 1986). Four sample runs per demonstration condition will be performed to ensure that the data will meet applicable test criteria and that three data sets can be selected to achieve the completeness objective of 75 %. Data from different runs will not be combined to achieve a single data set. Field sampling data will be reviewed following each sample run so that determinations regarding the need to repeat any of the demonstrations can be made promptly. Calculations will be made at the RPP-WTP to ensure that the tests will yield valid samples. Samples taken from sample runs will be large enough to allow for multiple analysis. Laboratory analyses that do not meet acceptance criteria will be repeated, if possible. Each volatile organic sampling train (VOST) sample run will consist of four 30-minute samples. This approach will provide a contingency sample to ensure that at least three valid samples are obtained per sampling run, which is necessary since a VOST sample can be analyzed only once.

4.3. Stack Method Quantitation Limits

Risk-based quantitation limits, (including practical quantitation limits [PQLs] and method detection limits [MDLs] for PODCs), and potential PICs will be provided in this section upon completion of the preliminary risk assessment. Because research and development work to select PODC's is not completed, information related to stack method quantitation limits is not currently available. Refer to Appendix A for the approximate date this information will be provided. Planned categories and parameters include the following:

- Volatile organics that have a boiling point of less than 30 degrees Celsius (°C)
- Volatile organics that have a boiling point between 30 and 100 °C
- Semivolatile organics that have a boiling point greater than 100 °C
- PCDDs, PCDFs, and PCBs
- Total organics compounds
- Metals
- Gross particulate, HCl and Cl_2

Table 4-1. Precision and Accuracy Objectives for Critical Measurements

Parameter	Matrix	Quality Control Type [d]	Precision [a]	Accuracy [b]
Volatile organics (organics with boiling point < 30 °C)	Offgas	Duplicate analysis on one sample or run	≤50 % RPD	From 50 to150 %
	Scrubber liquor [c]	Analytical method surrogate spikes	----	Analytical method within limits
Volatile organics (organics with boiling point from 30 to 100 °C)	Offgas	Duplicate samples from EPA audit cylinder (if required)	≤50 % RPD	From 50 to 150 %
		Duplicate analysis on one sample or run	≤50 % RPD	From 50 to 150 %
	Scrubber liquor [c]	Method 8260B surrogate spikes	----	Within method 8260B limits
		Analytical method surrogate spikes	----	Within method limits
Semivolatile organics (organics with boiling point >100°C)	Offgas	Duplicate analysis on one sample or run	≤50 % RPD	From 50 to 150 %
		Method 8270C surrogate spikes	----	Within method 8270C limits
PCDD, PCDF, PCBs	Offgas	C^{13} labeled sampling surrogate spikes	≤35 % RPD	From 70 to 130 %
		Isotope dilution internal standard spikes	----	From 40 to 120 %
		EPA audit cylinder for PCDD and PCDF (if required)	----	±30 %
		Method 8290 surrogate spikes	----	Within method 8290 limits
Total organics: volatile, field GC fraction	Offgas	Calibration within method [e] specifications	----	See section 7.2.6
		Field spike sample	±30 %	80 to 120 %
Total organics: semivolatile, total chromatographic fraction	Offgas	Calibration within method [g] specifications	----	See section 7.2.6
Total organics: nonvolatile, gravimetric fraction	Offgas	Calibration within method [g] specifications	----	See section 7.2.6

Table 4-1. Precision and Accuracy Objectives for Critical Measurements

Parameter	Matrix	Quality Control Type[d]	Precision[a]	Accuracy[b]
Metals[f]	Offgas	Matrix spike and post-digestion spikes	≤35 % RPD	From 75 to 125 %
	Glass waste form	Laboratory control sample	----	From 75 to 125 %
Particulate, HCl, and Cl_2	Offgas	Matrix spikes	≤35 % RPD	±30 %
Sample and velocity traverses Offgas velocity and flow rate O_2 and CO_2 Moisture content	Offgas	Calibration of testing and analytical equipment within specifications of EPA methods 1 through 4[f]	----	Within method limits
Carbon monoxide (CO)	Offgas	Pre- and post-demonstration calibrations	Drift < 3 % of span	Calibration error <2 % of span

[a] Precision data quality objectives are defined by relative percent difference (RPD). See formula in section 13.2.

[b] Accuracy is, in general, defined as percent recovery of spiked analytes, or the bias associated with the measurements of standard reference materials and standards. See formula in section 13.1.

[c] PODCs only

[d] Unless otherwise specified, methods are from *Test Methods for Evaluation Solid Waste* (EPA 1997a).

[e] *Guidance for Total Organics* (EPA 1996).

[f] *Code of Federal Regulations* (40 CFR 60, Appendix A).

[g] Metals include: Sb, As, Ba, Be, Cd, Cr, Pb, Hg, Ni, Se, Ag, Tl. Additional metals that may be included are: Al, Cu, Co, Mn, Vn, and Zn

5. Sampling and Monitoring Procedures

Procedures described in this section apply to objectives of the *Environmental Performance Demonstration Plan*. Other sampling and monitoring activities associated with startup and operational demonstrations are not addressed in this plan. Sampling procedures, equipment, and methods that will be used are summarized in Table 5-1. Any planned variations to the standard methods will be described in this section. Trip blank and field blank samples will be taken as required by the standard methods.

Anticipated sampling locations for the EPDP are shown in Figure 5-1 (indicated by numbers 1 through 5). Because a waste simulant will be developed specifically for commissioning and demonstrations (using specified concentrations and quantities of known compounds), extensive waste analyses will not be performed. However, samples of the waste simulant will be taken to confirm the composition of the simulant, and determine that sampling and analysis can be reproduced. Additional information about waste simulants is provided in the *Environmental Performance Demonstration Plan*.

Data and records from sampling and analysis activities will be retained in the performance demonstration project files. The laboratory will disposition samples in accordance with applicable regulations.

5.1. Offgas Sampling Location Determination

Offgas sampling locations will be designed to accommodate the required sampling trains per specifications of EPA Method 1 as outlined in 40 CFR 60 Appendix A. Two trains will be able to sample simultaneously at each location. One train will begin sampling at the traverse point closest to the port (near wall), while the opposing train will begin sampling at the traverse point farthest from the port (far wall). The cross-sectional layout of the locations and the location of each traverse point will be presented when the design is completed. Refer to Appendix A for the approximate date this information will be provided.

Samples are collected isokinetically at the minimum number of traverse points specified in EPA Method 1 (40 CFR 60 Appendix A). The actual number and location of the traverse points for isokinetic sampling will be determined on location according to the procedures outlined in EPA Method 1. The absence of cyclonic flow at the offgas sampling location will be verified. These determinations will be made once during the EPDP setup. The sampling train data will be used to determine emissions of volatile organic PODCs, as discussed in SW-846, Method 0031 (EPA 1997a). This sampling train may be operated as a single-point sampling point in a port that does not meet EPA Method 1 criteria (40 CFR 60 Appendix A).

5.2. Offgas Sampling Methods

The following sections describe the offgas sampling methods that will be used during the EPDP.

5.2.1. Total Particulate, Hydrogen Chloride, and Molecular Chlorine

A sampling train, as described in SW-846 Method 0050 (EPA 1997a) will be used to sample particulates, HCl, and Cl_2 in the offgas. Each demonstration run will consist of a nominal three hour sampling period. Any PM recovered from the sampling train will be analyzed using EPA Method 5 (40 CFR 60 Appendix A). Hydrochloric acid and Cl_2 that is collected will be measured by ion chromatography using SW-846 Method 9057.

5.2.2. Volatile Organic Compounds with Boiling Point Less Than 30 °C

The SW-846 Method 0040, as clarified in Attachment 1 to *Guidance on Collection of Emissions Data to Support Site-Specific Risk Assessments at Hazardous Waste Combustion Facilities* will be used to sample highly volatile organic compounds (those with boiling points less than 30 °C).

Analysis of the gaseous sample will be conducted by gas chromatography/mass spectrometry (GC/MS) using SW-846, Method 8260B. Condensate collected during sampling will be analyzed using the purge and trap technique described in SW-846, Method 5030.

To minimize sample loss due to storage and shipping, bag samples will be analyzed onsite using the field gas chromatography/flame ionization detection (GC/FID) method described in *Guidance for Total Organics* (EPA 1996).

Condensate analysis will be conducted using the purge and trap technique discussed in SW-846 Method 5030.

5.2.3. Volatile Organic Compounds with Boiling Point Between 30 °C and 100 °C

Volatile organic compounds in the offgas that have boiling points between 30 °C and 100 °C will be measured using SW-846 Method 0031, Sampling Method for Volatile Organic Compounds (SMVOC). Samples obtained using the SMVOC sampling train will be thermally desorbed by SW-846 Method 5041A, and analyzed using the GC/MS protocol in SW-846 Method 8260B.

5.2.4. Semivolatile Organic Compounds

Semivolatile organic compounds, which are organic compounds with boiling points greater than 100 °C, will be sampled using the Modified Method 5 (MM5) train described in SW-846 Method 0010.

Sample extracts may be prescreened by GC/FID or a gas chromatograph with an electron capture device (GC/ECD) to obtain information regarding the complexity and concentration of the sample. Actual analysis will be performed using SW-846 Method 8270C.

5.2.5. Total Organic Compounds

Sampling of total organic compounds will be performed using methods described in *Guidance for Total Organics*. This sampling will measure the uncharacterized organic portion of emissions or those organic compounds that have not been specifically identified and quantified by other methods. This publication describes the measurement of total organics from stack emissions and related field sampling efforts.

5.2.6. Polychlorinated Dibenzo-p-dioxin, Polychlorinated Dibenzofuran, and Polychlorinated Biphenyls

PCDDs, PCDFs, and PCBs will be sampled from a single SW-846 Method 0023A sampling train using the approach described in Section B.9 of *Guidance on Collection of Emissions Data to Support Site-Specific Risk Assessments at Hazardous Waste Combustion Facilities.*

Analysis for PCDDs and PCDFs will be performed by high-resolution gas chromatography (HRGC) and high-resolution mass spectrometry (HRMS) according to SW-846 Method 8290. Analysis for

semivolatile organics will be performed using the GC/MS procedure of SW-846 Method 8270C. Analysis for PCBs will be performed using the HRGC/HRMS methods described in EPA Draft Method 1668 (EPA 1997b).

5.2.7. Metals

Metals identified in *Guidance on Collection of Emissions Data to Support Site-Specific Risk Assessments at Hazardous Waste Combustion Facilities* will be sampled and analyzed according to SW-846 Method 0060.

5.2.8. Oxygen and Carbon Dioxide Monitors per Method 3A

During each demonstration run, concentrations of oxygen and of carbon dioxide will be measured in accordance with EPA Method 3A (40 CFR Part 60 Appendix A), using continuous monitors.

5.2.9. Particle Size Distribution

Particle size distribution is typically made using the approach outlined in *Guidance on Collection of Emissions Data to Support Site-Specific Risk Assessments at Hazardous Waste Combustion Facilities*. This approach uses EPA Method 5i outlined in 62 *Federal Register* 67788 (62 FR 67788) to determine PM emissions and Method CARB 501 (CARB 1990) to determine particle size distribution. The size of PM obtained from Method CARB 501 typically ranges from 0.25 μm to 10 μm in diameter.

Unlike commercial nonradioactive thermal treatment units, the RPP-WTP will use HEPA filters as the final step to remove PM from the offgas stream before releasing the offgas to the environment. HEPA filters are capable of removing PM 0.3 μm in diameter and larger with an efficiency of 99.97 %. Because Method CARB 501 (CARB 1990) will not effectively measure the resultant particle size distribution that will be emitted from the RPP-WTP, particle size distribution measurements will not be performed. Vendor information on particle size distribution will be provided in the environmental performance demonstration report, if available.

5.3. Glass Waste Form Sampling and Analysis

The sampling method for molten glass will be determined upon completion of engineering optimization activities that are currently in progress. As the design of the RPP-WTP progresses, additional information related to the sampling method will be provided in this section. Refer to Appendix A for details of the proposed information completion schedule.

It is currently anticipated that midway through each sampling run, samples of molten glass will be obtained during a glass pour, to be used for organics and metals analysis. Samples will be allowed to cool and will be transferred from the melter cell to the sample preparation area. Samples destined for organics analysis will be analyzed by GC/MS using SW-846 Method 8260B protocol. Samples destined for metals analysis will be analyzed using inductively coupled argon plasma (ICAP) protocol, as described in SW-846 Method 6010. Mercury will be analyzed using the cold vapor atomic absorption spectrometry (CVAA) protocol of SW-846 Method 7470.

5.4. Scrubber Liquor Sampling and Analysis

The method for sampling PODCs in the submerged-bed scrubbers and the caustic scrubbers will be determined upon completion of the engineering optimization activities that are currently in progress. Refer to Appendix A for the approximate date this information will be provided.

It is currently anticipated that grab samples will be obtained every 30 minutes and deposited in an amber glass bottle. For volatile PODCs, the samples will be analyzed by GC/MS using SW-846 Method 8260B. If semivolatile PODCs are selected, analysis will be performed using SW-846 Method 8270C.

5.5. Process and Offgas Continuous Monitoring

Specific process and offgas parameters will be monitored using instrumentation that feeds data into the plant information computer. Due to the preliminary nature of the RPP-WTP design, information about process and offgas monitoring equipment, involved with the environmental performance demonstration program, is not currently available. Refer to Appendix A for the approximate date this information will be provided. When this information is available, it will include the following:

- Measurement devices to be used
- Frequency at which the measurement devices will sample the parameters being measured
- Frequency at which the measurement devices will record the value for the parameters
- How the measurement devices will calculate the recorded values from the values that are sampled
- How the parameter values will be recorded

Figure 5-1. Sampling Locations for the Environmental Performance Demonstration

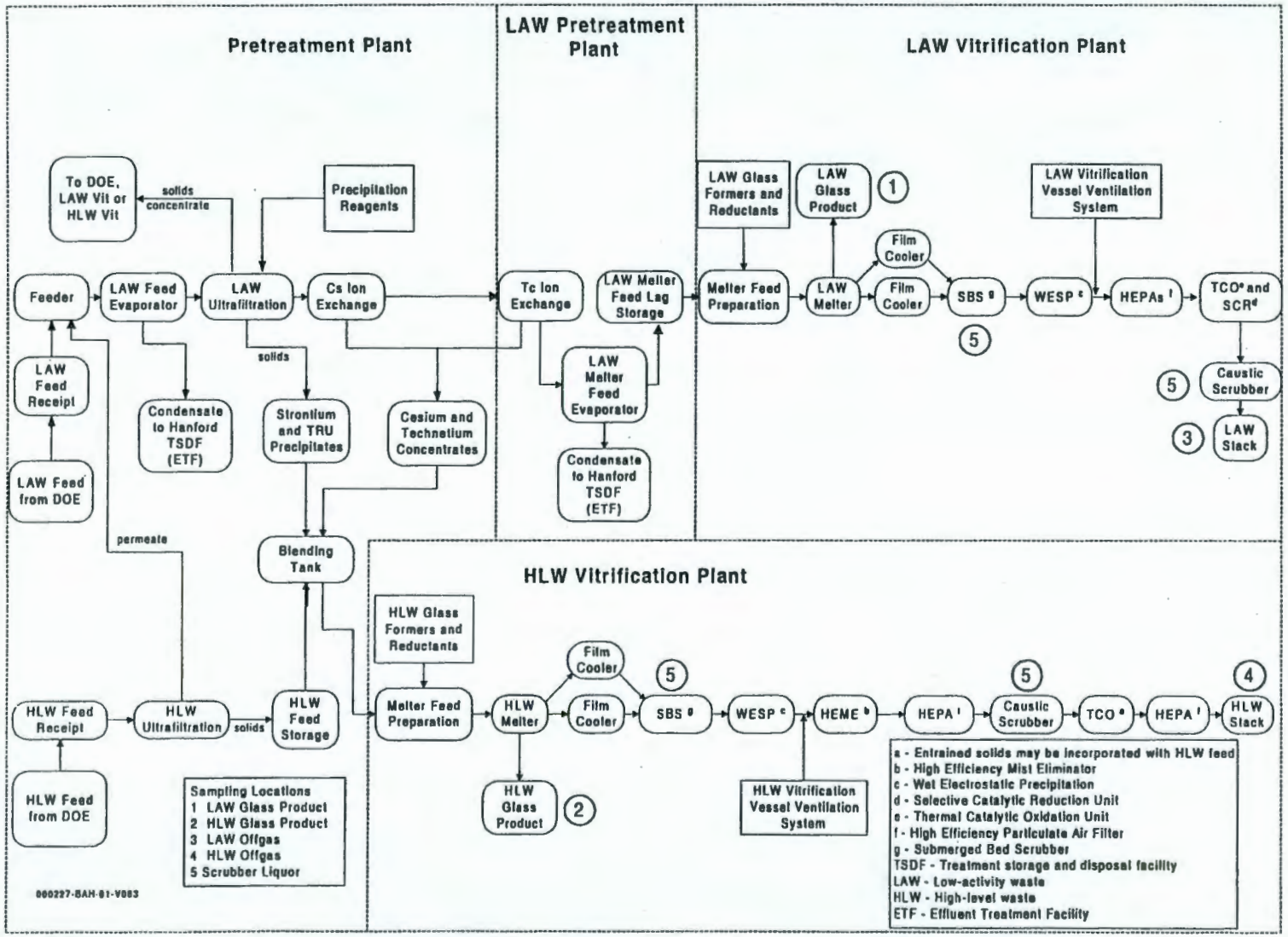

Table 5-1. Sampling Procedures, Equipment, and Methods

Sample Stream	Analytical Parameter	Sampling Equipment [a]	Frequency per Run	Condition [b]
Offgas	Gross particulate (radionuclide surrogates), HCl, Cl_2	0050 train	One 3 hour isokinetic sample per run	SRE and DRE
	Volatile organics (boiling point < 30 °C)	0040 train	One 2 hour isokinetic sample per run	DRE
	Volatile organics (boiling point 30 to 100 °C), principal organic dangerous constituents (PODCs)	0031 train	Four 30 minute samples per run	DRE
	Semivolatile organics (boiling point > 100 °C)	0010 train	One 3 hour isokinetic sample per run	DRE
	Total organics: volatile, field gas chromatography fraction [c]	0040 bag sample	One 2 hour isokinetic sample per run	DRE
	Total organics: semi- volatile, total chromatographic fraction [c] Total organics: nonvolatile gravimetric fraction [c]	0010 train	One 3 hour isokinetic sample per run	DRE
	PCDD [d], PCDF [e], PCBs [f]	0023A train	One 3 hour isokinetic sample per run	DRE
	Metals [g]	0060 train	One 3 hour isokinetic sample per run	SRE
	O_2, CO_2	EPA method 3A [h]	Simultaneous with isokinetic sampling	SRE and DRE
	Sample and velocity traverses	EPA method 1 [h]	Simultaneous with isokinetic sampling	SRE and DRE
	Offgas velocity and flow rate	EPA method 2 [h]	Simultaneous with isokinetic sampling	SRE and DRE
	Moisture content	EPA method 4 [h]	Simultaneous with isokinetic sampling	SRE and DRE
	CO	Continuous monitor	Continuous	SRE and DRE

Table 5-1. Sampling Procedures, Equipment, and Methods

Sample Stream	Analytical Parameter	Sampling Equipment [a]	Frequency per Run	Condition [b]
Glass waste form	PODCs	Method TBD [i]	Frequency TBD [i]	DRE
	Metals - total	Method TBD [i]	Frequency TBD [i]	SRE
	Organics	Method TBD [i]	Frequency TBD [i]	SRE and DRE
Scrubber liquor	PODCs	Method TBD [i]	Frequency TBD [i]	DRE

[a] Unless otherwise specified, all sampling and analysis methods are from *Test Methods for Evaluating Solid Waste*, SW-846 (EPA 1997a).

[b] SRE - system removal efficiency

[c] Total organics as defined by methodology in *Guidance for Total Organics* (EPA 1996)

[d] PCDD - polychlorinated dibenzo-p-dioxin

[e] PCDF - polychlorinated dibenzofuran

[f] PCB - polychlorinated biphenyl

[g] Metals include antimony, arsenic, barium, beryllium, cadmium, chromium, lead, mercury, nickel, selenium, silver, and thallium. Additional metals that may be included are aluminum, copper, cobalt, manganese, vanadium, and zinc.

[h] *Code of Federal Regulations* (40 CFR 60 Appendix A)

[i] TBD - to be determined

6. Sample Handling, Traceability, and Holding Times

Methods for handling samples, ensuring sample traceability, and identification of sample holding times are described in this section.

6.1. Sample Containers and Shipping Requirements

Guidelines pertaining to containers, preservatives, and holding times for samples are summarized in Table 6-1. Sampling trains assembled before arrival at the RPP-WTP will be certified by the sampling contractor that they have been prepared in accordance with the appropriate method. The sampling contractor will forward the certification to the environmental performance demonstration manager before sampling begins. The certification will become part of the EPDP file.

All samples requiring analysis at locations outside of the Hanford Site will be shipped by express air carrier to the analytical laboratory, in order to comply with required holding times for extraction and analysis. These samples will be packaged in accordance with applicable air transportation requirements.

6.2. Sample Tracking and Management

The following sample tracking and management procedures will be implemented as standards. Members of the sampling team will be responsible for:

- Labeling
- Preservative addition
- Packaging
- Handling
- Shipping
- Storing samples obtained in the field

These personnel will retain, to the extent possible, in situ characteristics of the samples to ensure analytical results are representative.

Each sample will be affixed with a tamper-indicating seal. Sampling personnel will record sampling activities in sample logs and custody forms. After each sampling run, the sampling contractor's field leader (or designee) will review the sample logs and custody forms.

Samples will be marked with their unique identification at the time of collection. A tag or label will be marked and attached to the sample container. As a minimum, sample identification will include the following:

- Project name and number
- Unique sample number
- Sampling location
- Sampling date and time
- Name of individual performing sampling
- Preservation or sample conditioning employed

Sample collection data for process streams and offgas will be recorded on field data sheets or data logger printouts. General field activities will be recorded on field activity daily log sheets.

6.3 Chain of Custody

A key consideration in evaluating the quality of analytical data, is the ability of the data's provider to demonstrate that the samples were received at the laboratory without alteration. Evidence of collection, shipment, laboratory receipt, and laboratory custody until disposal will be documented to verify the samples were not altered.

Documentation will be accomplished through a chain-of-custody form that will record each sample and names of individuals responsible for sample collection, shipment, and receipt. A sample will be considered in custody when the following conditions exist:

- In the possession of an individual
- In view, after being in physical possession
- Locked so that it cannot be tampered with, after having been in physical custody
- In a secured area that is restricted to authorized personnel

One copy of the chain-of-custody form will be retained in the sampling contractor's project file. Contents of the project file will be transferred to the RPP-WTP at the completion of the EPDP or at intervals designated by the environmental performance demonstration manager.

The chain-of-custody form will be signed by each individual when samples are in custody. Instructions for properly maintaining the chain-of-custody form will be listed on the form. An example chain-of-custody form is provided in Figure 6-1.

Figure 6-1. Example Chain-of-Custody Form

Sample Type	Date	Time	Sample Number	Name of Sampler (Print)	Signature of Sampler	Analysis Required	Remarks
Actual Sample							
Trip Blank							

Relinquished by: (Signature)	Date	Time	Received by: (Print)	Received By: (Signature)
Relinquished by: (Signature)	Date	Time	Received by: (Print)	Received By: (Signature)
Relinquished by: (Signature)	Date	Time	Received by: (Print)	Received By: (Signature)
Relinquished by: (Signature)	Date	Time	Received by: (Print)	Received By: (Signature)
Relinquished by: (Signature)	Date	Time	Received by: (Print)	Received By: (Signature)
Relinquished by: (Signature)	Date	Time	Received by: (Print)	Received By: (Signature)
Relinquished by: (Signature)	Date	Time	Received for Laboratory by: (Print)	Received for Laboratory by: (Signature)

Table 6-1. Sampling Containers, Preservatives, and Holding Times

Measurement	Matrix	Preservative	Holding Time
Volatile organics (including volatile organics with boiling point 30-100 °C; volatile organics with boiling point < 30 °C; and total organics, field gas chromatography fraction)	Tedlar bags	None	2 hours
	TenaxGC and TenaxGC charcoal	Cool to 4 °C	14 days to analysis
	Glass waste form	Cool to 4 °C Sodium bisulfate	14 days to analysis
	Liquid [a]	Cool to 4 °C Sodium bisulfate	14 days to analysis
Semivolatile organics (including semivolatile organics with boiling point > 100 °C; total organics, total chromatographic fraction; and total organics, gravimetric fraction)	XAD-2 resin	Cool to 4 °C	14 days to extraction 40 days from extraction to analysis
	Liquid [a]	Cool to 4 °C Sodium bisulfate	14 days to analysis
PCDD, PCDF, PCBs	XAD-2 resin	Cool to 4 °C	14 days to extraction 40 days from extraction to analysis
Metals	Solids and other non-aqueous	Cool to 4 °C	6 months to analysis (28 days for Hg)
	Aqueous and liquid	Cool to 4 °C Nitric acid, pH<2	6 months to analysis (28 days for Hg)
HCl, Cl_2 and particulate	0.1N NaOH	Cool to 4 °C	30 days to analysis
	0.1N H_2SO_4	Cool to 4 °C, pH<2	
	Particulate filter	Cool to 4 °C	

[a] PODCs only

7. Calibration Procedures and Frequency

7.1. Sampling Equipment

Sampling equipment will be maintained and calibrated by the sampling contractor in accordance with procedures in the *Quality Assurance Handbook for Air Pollution Measurement Systems* (EPA 1972). Calibration procedures and frequencies for sampling equipment are summarized in Table 7-1. Sampling personnel are responsible for ensuring the integrity of the sampling equipment and inspecting those components that are prepared by the analytical laboratory (such as filters and resin cartridges). Equipment that is out of calibration must be correctly calibrated before use. Calibration results will be recorded in the log book.

7.2. Laboratory Instruments

The analytical contractor's project manager and QA manager will ensure laboratory instruments are calibrated to meet criteria outlined in the reference methods. Instruments that do not meet required criteria will be repaired. Calibrations will be repeated until the applicable criteria is met. If an instrument is not in calibration and data has been collected with it, corrective action will be performed in accordance with section 14 of this QA plan. Data validation will be performed in accordance with section 9.2 of this QA plan.

7.2.1. Hydrogen Chloride and Chlorine

Hydrogen chloride and chlorine concentrations, will be analyzed by the analytical laboratory contractor per specifications in SW 846 Method 9057. The ion chromatograph will be calibrated daily with three concentration levels and a blank. A continuing calibration check will be conducted for every 10 samples. If the check standard response does not agree within ± 10 % of the initial curve, the calibration will be repeated.

7.2.2. Volatile Organics

Samples will be analyzed by the analytical laboratory contractor in accordance with SW-846 Method 8260B. Calibrations described in this method include a five-point initial calibration and daily tuning checks with bromofluorobenzene.

As discussed in the method, the initial calibration curve for each compound of interest will be verified every 12 hours of operation. The calibration curve will use a calibration standard at a concentration near the midpoint-concentration for the calibrating range of the GC/MS. The calibration curve will consist of five standards prepared from certified grade standard materials for the volatile organics. Continuing calibration percent difference must be within 20 % of the initial calibration response. Internal standards and surrogate compounds specified in SW-846 Method 8260B will be used in all analyses.

7.2.3. Polychlorinated Dibenzo-p-dioxins and Polychlorinated Dibenzofurans

The analytical laboratory contractor will measure PCDD and PCDF concentrations using HRGC/HRMS, as described in SW-846 Method 8290A. Calibration(s) will be conducted using C^{13} labeled and unlabeled standards representing the tetra through octa congeners, as discussed in Method 8290A. An initial calibration curve will be prepared at five concentration levels. One midrange calibration standard will be

used to conduct continuing calibrations every 12 hours to verify compound retention time windows and conformance with initial calibration response factors. Response factors must agree within 20 to 30 % of initial calibration as specified in section 7.7.4 of SW-846 Method 8290A.

Internal surrogates and surrogate spikes required by SW-846 Method 8290A will be used.

7.2.4. Semivolatile Organics

Samples will be analyzed by the analytical laboratory contractor in accordance with SW-846 Method 8270C. Calibrations described in this method include a five-point initial calibration and daily tuning checks with decafluorotriphenylphosphine.

The initial calibration curve for each compound of interest will be verified every 12 hours of operation. A calibration standard at a concentration near the midpoint concentration will be used for the calibrating range of the GC/MS. The continuing calibration response percent difference must be within ± 20 % of the initial calibration response. Internal standards and surrogate compounds specified in SW-846 Method 8270C will be used in all analyses.

7.2.5. Polychlorinated Biphenyls

PCB concentrations by congener will be measured by the analytical laboratory contractor using HRGC/HRMS as described in SW-846 Draft Method 1668 (EPA 1997b). Calibration will be conducted using C^{13} labeled and unlabeled standards. An initial calibration curve will be prepared at five concentration levels. One midpoint calibration standard will be used to conduct continuous calibration every 12 hours of operation for all native PCBs and labeled compounds to verify retention times and conformance with initial calibration response factors. Adjustments or recalibration will be performed until all performance criteria are met.

7.2.6. Total Organic Analysis

Total organic analyses will include analysis for volatile, semivolatile, and nonvolatile organic compounds using the approach described in *Guidance for Total Organics* (EPA 1996). In both cases, two types of analyses will be conducted, as described below.

7.2.6.1. Volatile Organics

The bag sample for gaseous phase volatile organic analysis, will be analyzed by the laboratory or sampling contractor in the field using GC/FID. A qualitative calibration will be conducted using a gas standard containing C_1 to C_{17} alkanes. The response factor for quantitation will be obtained from a three-point calibration with a certified propane standard gas. During the demonstration, a daily calibration check will be conducted with a midrange standard. If the daily response is not within 10 % of the initial calibration curve, the initial calibration will be repeated.

Condensates from the sample train will be analyzed by purge and trap GC/FID. Calibration will be performed with standards of pentane, hexane, and heptane in methanol. Calibration will be conducted at a minimum of three concentration levels. During the demonstration, a daily calibration will be conducted with a midrange standard. Daily response must be within 10 % of the original calibration curves.

7.2.6.2. Semivolatile Organics

Semivolatile analysis will consist of total chromatographable organics (TCO) analysis and gravimetric analysis.

TCO analysis will be performed by the analytical laboratory contractor with extracts from the SW-846 Method 0010 train. The retention time range for quantitation will be determined with standards of n-heptane and n-heptadecane. The calibration curve for quantification will be developed with standards of decane, dodecane, and tetradecane. Duplicate injections must yield results within 15 % of each other. The daily check standard must agree with the original response curve within 15 %. If the check is not within 15 % of the original response curve, the daily check standard will be repeated.

Gravimetric analysis for nonvolatile organics will be conducted by evaporating an aliquot of the SW-846 Method 0010 extract to dryness and weighing the residue to within ± 0.1 mg on an analytical balance. The balance will be calibrated with ASTM Class-S weights.

7.2.7. Metals

Metals will be measured by the analytical laboratory contractor using ICP/MS in accordance with SW-846 Method 6010B. The laboratory's instruments will be calibrated according to the manufacturer's recommended procedures using mixed calibration standards according to section 5.4 of this method. A daily calibration will be required. Calibration will be verified using a continuing calibration verification standard immediately following daily calibration, after 10 samples, and at the end of an analytical run. If the instrument does not reproduce the concentrations of the standard within 10 %, the complete calibration procedures will be repeated.

Mercury will be analyzed using cold vapor atomic absorption spectrometry (CVAA) in accordance with SW-846 Method 7470A. During the demonstration, a daily calibration check will be conducted with a midrange standard. If the daily response is not within 10 % of the initial calibration curve, the initial calibration will be repeated.

Table 7-1. Sampling Equipment Calibration Procedures

Equipment	Calibration Technique	Reference Standard	Acceptance Limit	Frequency
Dry-gas meter from 0 to 2 cfm[a]	Compare with wet test meter	Wet test meter with ± 1 % accuracy in 0 to 2 cfm range	Y ± 0.02 Y ΔH ± 0.15 Y ± 0.05 Y pre-test vs. post-test	Pre-test Post-test
Gas meter for 0 to 2 L per min	Compare volume measured with predicted volume based on rate measurement made with standard bubble meter at constant rate	Bubble meter	Y ± 0.02 Y Y ± 0.05 Y pre-test vs. post-test	Pre-test Post-test
Analytical balance	Compare with certified weight standards	Class S weights	± 0.5 mg	Daily
Type-S pitot tube	Check dimensions against design criteria	Design criteria	As stated in EPA Method 2	Pre-test
Probe nozzles	Measure three different diameters with caliper to ± 0.001 inch	Dial caliper	Difference between any 2 diameters <0.004 inch	Onsite before demonstration

[a] Cubic feet per minute

8. Analytical Procedures

Analytical procedures are shown in Table 8-1. The procedures will use EPA-approved, or State of Washington approved, methods to perform sample extractions and analyses. The analytical methods will be discussed briefly in the text. Modifications to the standard methods also will be described in the following sections.

In addition to the list of constituents undergoing analysis, the top 30 quantifiable organic peaks will be identified. All non-target peaks that are at least 10 % of the nearest internal standard will be identified and quantified.

The use of EPA or State of Washington approved, methods internal quality control (QC) checks, performance and system audits, and an accredited analytical laboratory, will ensure data are obtained. The name of the selected analytical laboratory and appropriate accreditation information will be provided when the *Environmental Performance Demonstration Plan* and this QAPjP are updated and submitted prior to the commencement of the environmental performance demonstration activities.

8.1. Hydrogen Chloride, Chlorine

Chloride ion content in the H_2SO_4 and NaOH fractions will be analyzed by ion chromatography in accordance with SW-846 Method 9057.

8.2. Volatile Organics

Volatile organics will be analyzed by GC/MS using SW-846 Method 8260B. All samples will be spiked with the internal standards and surrogate compounds specified in the method. Sorbent tubes will be thermally desorbed using SW-846 Method 5041A. TenaxGC and TenaxGC/charcoal tubes for each sample will be analyzed separately to verify collection efficiency. SW-846 Method 5031 or 5032 will be used to introduce the aqueous samples into the instrument for volatile analysis. Direct analysis using a sample loop will be used for sub-sampling from tedlar bags per SW-846 Method 0040. Purge and trap using SW-846 Method 5035 will be used to prepare samples when analysis by GC/MS in accordance with SW-846 Method 8260B is indicated.

The volatile organic target contaminant list is shown in Table 8-2. In addition to the list of constituents undergoing analysis shown in Table 8-2, the top 30 quantifiable organic peaks will be tentatively identified through the use of library searches. In addition, non-target peaks that are at least 10 % of the next internal standard will be identified and quantified.

8.3. Polychlorinated Dibenzo-p-dioxins and Polychlorinated Dibenzofurans

Analysis of PCDDs and PCDFs will be performed using HRGC/HRMS in accordance with SW-846 Method 8290. The method provides procedures for the detection and quantitative measurement of tetra- through octa-chlorinated homologues of PCDDs and tetra- through octa-chlorinated homologues of PCDFs. The analytical method calls for the use of HRGC and HRMS on purified sample extracts, in conjunction with matrix-specific extraction and analyte-specific cleanup. Compounds that can be determined using this method are presented in Table 8-3.

8.4. Polychlorinated Biphenyls

PCBs will be determined using the isotope dilution HRGC/HRMS procedure described in Draft Method 1668. PCBs that may be determined using this method are presented in Table 8-4.

8.5. Semivolatile Organic Compounds

Semivolatile organics analysis will be made using GC/MS in accordance with SW-846 Method 8270C. Typically, SW-846 Method 3510 will be used to prepare the samples for analysis. Target analytes for semivolatile organic analysis are shown in Table 8-5.

8.6. Total Organic Analysis

Total organic analysis will be conducted in accordance with the guidelines in *Guidance for Total Organics*. A gaseous phase bag sample will be analyzed for volatile organics by GC/FID and calibrated with propane standards. Condensate from the bag sampling will be analyzed by purge and trap GC/FID for volatile organics. The extract from SW-846 Method 0010 train will be analyzed for total chromatographable semivolatile organics by GC/FID and for nonvolatile organics by gravimetric analysis.

8.7. Metals

Process samples and offgas samples will be analyzed for the metals identified in *Guidance on Collection of Emission Data to Support Site-Specific Risk Assessments at Hazardous Waste Combustion Facilities* using ICP-AES as specified in SW-846 Method 6010B. These metals are identified in Table 8-6. Mercury will be measured using CVAA as specified by SW-846 Method 7470.

Table 8-1. Summary of Analytical Procedures

Analytical Parameter	Sample Matrix	Sample Preparation [a]	Analytical Method [a]
Principal organic dangerous constituents (PODCs)	Offgas	None	TBD [b] upon selection of PODCs
	Liquid	Purge and trap – 5030/5035, Dilution – 3580	
	Glass waste form	Purge and trap – 5035	
Volatile organics, boiling point < 30 °C	Offgas	None	8260B, GC/MS [c]
Volatile organics, boiling point 30-100 °C	Offgas	None	8260B, GC/MS
Semivolatile organics boiling point > 100 °C	Offgas	Soxhlet extraction – 3542, Condensate-liquid extraction – 3520	8270C, GC/MS
PCDD [d], PCDF [e]	Offgas	Soxhlet extraction – 3540	8290, HRGC/HRMS [f]
PCBs [g]	Offgas	Soxhlet extraction – 3540 Condensate-liquid extraction – 3250	1668, HRGC/HRMS
Total organics [h]	Offgas	Bag and condensate – none Method 0010 train – 3542, 3520	Field GC/FID [i], GC/FID [i], TCO [j], gravimetric [i]
Metals	Offgas	Acid digestion per 0060	6010, ICAP [k]
	Glass waste form	Acid digestion per 6010	6010, ICAP, 7470, CVAA [l] for Hg
HCl, Cl_2	Offgas	None	9057, ion chromatography
O_2, CO_2, H_2O, CO	Offgas	None	Methods 3A [m], 4 [m]

[a] Unless otherwise specified, all sample preparation and analytical methods are from SW-846 (EPA 1997a).
[b] TBD - to be determined
[c] GC/MS - gas chromatography/mass spectrometry
[d] PCDD - polychlorinated dibenzo-p-dioxin
[e] PCDF - polychlorinated dibenzofuran
[f] HRGC/HRMS - high-resolution gas chromatography/high-resolution mass spectrometry
[g] PCB - polychlorinated biphenyl
[h] Total organics as defined by methodology in *Guidance for Total Organics* (EPA 1996).
[i] Field gas chromatography with flame ionization detection, purge and trap gas chromatography with flame ionization, and gravimetric analysis methods, as described in *Guidance for Total Organics* (EPA 1996). GC/FID = gas chromatography/flame ionization detection
[j] TCO - total chromatographable organics
[k] ICAP - inductively coupled argon plasma emission spectrometry
[l] CVAA - cold vapor atomic absorption
[m] 40 CFR 60 Appendix A

Table 8-2. Volatile Compound Target Contaminant List

Chloromethane	2-Butanone	Bromoform
Bromomethane	1,1,1-Trichloroethane	4-Methyl-2-pentanone
Vinyl chloride	Carbon tetrachloride	2-Hexanone
Chloroethane	Vinyl acetate	Tetrachloroethene
Methylene chloride	Bromodichloromethane	1,1,2,2-Tetrachloroethane
Acetone	1,2-Dichloropropane	Toluene
Carbon disulfide	cis-1,3-Dichloropropene	Chlorobenzene
1,1-Dichloroethene	Trichloroethene	Ethylbenzene
1,1-Dichloroethane	Dibromochloromethane	Styrene
1,2-Dichloroethene	1,1,2-Trichloroethane	Xylenes (total)
Chloroform	Benzene	
1,2-Dichloroethane	trans-1,3-Dichloropropene	

Table 8-3. Polychlorinated Dibenzo-pdioxins and Polychlorinated Dibenzofurans

2,3,7,8-Tetrachlorodibenzo-p-dioxin (TCDD)	2,3,7,8-Tetrachlorodibenzofuran (TCDF)
1,2,3,7,8-Pentachlorodibenzo-p-dioxin (PeCDD)	1,2,3,7,8-Pentachlorodibenzofuran (PeCDF)
1,2,3,6,7,8-Hexachlorodibenzo-p-dioxin (HxCDD)	2,3,4,7,8-Pentachlorodibenzofuran (PeCDF)
1,2,3,4,7,8-Hexachlorodibenzo-p-dioxin (HxCDD)	1,2,3,6,7,8-Hexachlorodibenzofuran (HxCDF)
1,2,3,7,8,9-Hexachlorodibenzo-p-dioxin (HxCDD)	1,2,3,7,8,9-Hexachlorodibenzofuran (HxCDF)
1,2,3,4,6,7,8-Heptachlorodibenzo-p-dioxin (HpCDD)	1,2,3,4,7,8-Hexachlorodibenzofuran (HxCDF)
1,2,3,4,6,7,8,9-Octachlorodibenzo-p-dioxin (OCDD)	2,3,4,6,7,8-Hexachlorodibenzofuran (HxCDF)
	1,2,3,4,6,7,8-Heptachlorodibenzofuran (HpCDF)
	1,2,3,4,7,8,9-Heptachlorodibenzofuran (HpCDF)
	1,2,3,4,6,7,8,9-Octachlorodibenzofuran (OCDF)

Source: SW-846 Method 8290 (EPA 1997a)

Table 8-4. Polychlorinated Bi-phenyls Target Contaminant List

3,3'4,4'-Tetrachlorobiphenyl	2,3,3'4,4',5-Hexachlorobiphenyl
2,3,3',4,4'-Pentachlorobiphenyl	2,3,3',4,4',5'-Hexachlorobiphenyl
2,3,4,4',5-Pentachlorobiphenyl	2,3'4,4'5,5'-Hexachlorobiphenyl
2,3'4,4',5-Pentachlorobiphenyl	3,3'4,4'5,5'-Hexachlorobiphenyl
2'3,4,4',5-Pentachlorobiphenyl	2,2'3,3'4,4'5-Heptachlorobiphenyl
3,3'4,4',5-Pentachlorobiphenyl	2,2'3,4,4'5,5'-Heptachlorobiphenyl
	2,3,3'4,4'5,5'-Heptachlorobiphenyl

Source: SW-846 Method 1668 (EPA 1997a).

Table 8-5. Semivolatile Organic Compound Target List

Phenol	Nitrobenzene	bis(2-Chloroethyl)ether
Isophorone	Hexachlorocyclopentadiene	2-Chlorophenol
2-Nitrophenol	2,4,6-Trichlorophenol	1,3-Dichlorobenzene
2,4-Dimethylphenol	2,4,5-Trichlorophenol	1,4-Dichlorobenzene
Benzoic acid	Benzoic acid	2-Chloronaphthalene
Benzyl alcohol	bis(2-Chloroethoxy)methane	2-Nitroaniline
1,2-Dichlorobenzene	2,4-Dichlorophenol	Dimethylphthalate
2-Methylphenol	1,2,4-Trichlorobenzene	2,2'-oxybis(1-Chloropropane)
2,6-Dinitrotoluene	4-Methylphenol	4-Chloroaniline
N-Nitroso-di-n-propylamine	Hexachlorobutadiene	Hexachloroethane
4-Chloro-3-methylphenol	3-Nitroaniline	4-Bromophenyl-phenylether
Hexachlorobenzene	bis(2-Ethylhexyl)phthalate	2,4-Dinitrophenol
Pentachlorophenol	Di-n-octylphthalate	4-Nitrophenol
Dibenzofuran	2,4-Dinitrotoluene	Carbazole
Diethylphthalate	Di-n-butylphthalate	4-Chlorophenyl-phenylether
4-Nitroaniline	Butylbenzylphthalate	4,6-Dinitro-2-methylphenol
3,3'-Dichlorobenzidine	N-Nitrosodiphenylamine	

Table 8-6. Metals Target List

Aluminum	Cobalt
Copper	Manganese
Nickel	Selenium
Vanadium	Zinc
Arsenic	Beryllium
Cadmium	Chromium
Silver	Barium
Mercury	Lead
Antimony	Thallium

9. Data Reduction, Validation, and Reporting

This section describes the approach used to report, review, and reduce field and laboratory data into an appropriate presentation format for the environmental performance demonstration report. The report will present data to demonstrate compliance with the EPDP's objectives. Raw data will be generated as field sampling documentation, sample traceability documentation, laboratory processing documentation, and raw data from analytical results at the laboratory. Analytical results will be compiled in a report from the laboratory that will include the analytical data package. After the analytical results have been delivered to the laboratory analysis coordinator, the data will be verified to ensure compliance with the specifications required of the laboratory. If the data meet the analytical requirements, the data will be used to calculate the environmental demonstration program's performance indicators. Calculation of these performance indicators will incorporate the data reduction steps to organize the environmental performance demonstration data into a usable database.

9.1. Data Reporting

The analytical laboratory contractor will complete the data reporting process by compiling the analytical data packages and preparing results. The following sections address the data reporting activities to be performed by the analytical laboratory contractor.

9.1.1. Analytical Data Packages

Analytical data packages will be provided by the analytical laboratory contractor(s) and will be formatted and organized using the methods, standards, and format of the *National Functional Guidelines for Inorganic Data Review* (EPA 1994a) and *National Functional Guidelines for Organic Data Review* (EPA 1994b). These data packages will include the instrument's raw data, parameter-specific QC documentation, calibration and calibration check performance, and instrumentation performance information. These data are included so that an independent verification of the final analytical results can be conducted. In addition to the raw data, all analytical data packages will contain the following two elements:

- Case Narrative – This portion of the data package will identify project-specific information and any pertinent information from the performing laboratory concerning data quality. It will provide a cross-reference listing of the field sample and laboratory sample identities. The narrative also will summarize QC data and difficulties, or analytical anomalies, encountered during laboratory processing that are pertinent to achieving objectives specific to the environmental performance demonstration program.

- Traffic Reports – This portion of the data package will include the request for analysis, chain of custody, and traceability documentation for all samples.

Data packages for volatile and semivolatile PCDDs, PCDFs, and PCBs will include the following summary forms and supporting raw data:

- Analysis data summary sheet
- Surrogate recovery summary
- Field duplicate data

- Matrix spike and matrix spike duplicate recovery summary
- Method blank summary
- GC/MS tuning and mass calibration summary
- Initial calibration data
- Data qualifiers
- Continuing calibration data

Sections of the data packages for metals and chlorides by ICP or ICP/MS and CVAA will include the following summary forms and supporting raw data:

- Inorganic data analysis sheet
- Field duplicate data
- Data qualifiers
- Initial and continuing calibration verification
- Blanks
- Inductively coupled plasma (ICP) interference check sample
- Spike sample recovery
- Duplicates
- Laboratory control sample
- Standard addition methods
- ICP serial dilution
- Instrument detection limits
- ICP inter-element correction factors
- ICP linear ranges
- Preparation log
- Analysis run log

9.1.2. Analytical Data Results

Depending on the analytical parameter, laboratories recognize three different quantitation limits for presentation of analytical results. The limits are the method detection limit MDL, the instrument detection limit (IDL), and the practical quantitation limit PQL.

The MDL is a matrix-independent statistical limit, which may be defined as the minimum concentration of a substance that can be measured and reported with a 99 % confidence that the analyte concentration is greater than zero. It is determined from an analysis of seven replicate samples with analyte present at three to five times the estimated MDL. The MDL is determined by using the following formula:

$$MDL \text{ is } \sigma \times t$$

Where

σ is standard deviation
t is students' t-test value

The IDL is often used for inorganic analyses. The IDL is defined as the smallest signal above background noise that an instrument can detect reliably. The IDL is determined by taking the average of a standard deviation obtained from a signal from the analyte in a series of seven replicate measurements of a reagent blank's signal at the same wavelength, and multiplying this value by 3. The equation for the

calculation of IDL is identical to the equation for calculating the MDL. It is, therefore, like the MDL, a statistical limit, and is matrix independent.

The PQL is defined as the lowest level that can be achieved reliably within specified limits of precision and accuracy during routine laboratory operating conditions. It is matrix-dependent and is calculated as a multiple of the MDL or IDL. Each compound or element is assigned a multiplier that is contingent upon the behavior of the compound or element during analysis. Changes to extraction protocol, amount of sample used in preparation, dilution, and level of laboratory technician skill applied to the sample can raise or lower the PQL.

The analytical results for PCDDs and PCDFs will use an isotope dilution method. Each sample will be spiked with an isotopically labeled surrogate for each target compound. The recovery for each surrogate will be determined on a sample-by-sample basis; the analytical result will be normalized to the recovery of the corresponding surrogate compound. In this manner, the PQL for each sample and each compound can vary as the surrogate recovery varies. This isotope dilution method is considered to be the most accurate quantitation method available for these analyses.

Results of sample analyses will be reported in concentration units. Data reported as "not detected" will be referenced against a stated MDL or IDL value. Values between the MDL or IDL and the PQL will be qualified with a flag. Sample results will be reported for all samples and parameters required for the environmental performance demonstration as listed in Table 8-1. Based on guidelines found in the analytical method or in this document, the laboratory will assign qualifiers to the results, when appropriate. Data presented on tables in the performance demonstration report will include all data qualifiers.

9.1.3. Report Preparation

The analytical contractor will follow standard EPA operating procedures to apply the reporting process steps for the deliverables. The reporting process to be used is outlined in Figure 9-1.

The analytical laboratory contractor will review the calculations to confirm that the results are correct. An analysis-specific data review checklist will be used to ensure all preparation and analysis documentation for the demonstration run and QC samples is included in the data package. The laboratory project manager will perform the final review of the deliverables to check for completeness and to determine that the client's requirements for data quality were met.

9.2. Data Review

The internal data review process is summarized in Figure 9-1. The data review process will be initiated when the laboratory analysis coordinator receives analytical data packages from the laboratory and verifies that each sample was analyzed correctly for the parameter requested. Data transmittal may be electronic with a hard copy provided. This review of the deliverables will confirm that laboratory QC (such as matrix spike, matrix spike duplicates, and duplicate analyses) was performed and the results were reported. After this initial review, each data package will be compared with the raw data to verify that no transcription errors occurred during reporting.

Next, the data for each analytical parameter will be reviewed thoroughly for each individual sample to ensure that all the pertinent information is included in the analytical data package. This review will confirm that the data can be used to assess the performance of the RPP-WTP. Data validation will be performed using the process summarized in Figure 9-2.

9.3. Data Reduction

When the data review process is complete, the data will be separated by type into two groups: analytical results and QC results. Both the analytical and the QC results will be summarized in tables for presentation in the final performance demonstration report and reduced into a form that can be used in determining the performance of the treatment system.

9.3.1. Analytical Data Summary

Analytical data summary tables will be included in the performance demonstration report and will be categorized primarily by analytical parameter.

In the summary tables, the data for process and offgas train samples will be summarized for all sampling runs or on a run-by-run basis. The process sample results will be presented in terms of mass per unit volume (for liquid matrix samples) or per unit weight (for solid matrix samples). The data for offgas samples will be presented on a per tube basis (for Method 0031 samples) or on a front-half and back-half composite sample basis. Front-half and back-half results will be reported from the laboratory in terms of mass per unit volume. These concentrations will be converted to total train mass collected, by multiplying the recorded final volumes found on the field stack gas sample collection sheets by the concentration reported from the analytical laboratory. Total masses of the front-half and back-half will be added together into a train total that can be incorporated into DRE or emission calculations. Any estimated quantitation reported from the laboratory will be flagged on the analytical summary tables.

The analytical laboratory analysis coordinator, assisted by the analytical contractor manager, will evaluate the results, in order to determine whether the EPDP's objectives have been met by the reported data. All data collected during the EPDP will be validated through the review process described in this section and will be reported. If anomalous results are obtained, every reasonable effort will be made to identify the reason for the anomaly and the stage (for example, during sample collection, sample preparation, or analysis) at which it occurred. If any anomalies have occurred, the environmental performance demonstration report will include the results of the affected sample data, a thorough discussion of occurrence, and its impact on overall data usability.

9.3.2. Quality Control Data Summary

The QC data summary tables will be found in the QA/QC report appendix of the environmental performance demonstration report and may be organized by parameter. Types of QC data summary tables that will be included in the environmental performance demonstration report are as follows:

- Sample holding times
- Sample surrogate recovery results
- Matrix spike results
- Duplicate results
- Field blank results
- Trip blank background results
- Blank train background results
- Reagent blank background results
- Continuous emissions monitor calibration checks

Within each parameter, the tables will be categorized as accuracy determinations (such as surrogate recoveries and matrix spike/matrix spike duplicate analysis), precision determination (matrix spike/matrix spike duplicate analysis), and contamination evaluation results (information on field-generated blanks). The surrogate recoveries, the recoveries and relative percent differences (RPDs) from the matrix spike/matrix spike duplicate analyses, the RPDs from the duplicate analyses, and any other accuracy or precision estimates will be checked against the target acceptance limits found in section 4 of this document. Any data that fall outside of the target acceptance limits contained in the QAPjP will be flagged or footnoted on the QC data summary tables.

The laboratory analysis coordinator will be assisted by the analytical contractor manager during an evaluation of the results to determine if the QC target acceptance criteria have been met by the reported data. Any data that do not meet the target criteria will be flagged, footnoted, and discussed in the final report. All data collected during this project will be validated through the review process described in this section and will be reported. If anomalous results are obtained, every effort will be made to identify the cause of the anomaly and the stage (for example, during sample collection, sample preparation, or analysis) at which it occurred. If any anomalies have occurred, the environmental performance demonstration report will include the results of the affected sample data, a thorough discussion of the occurrence, and the impact on the data.

9.4. Train Total Calculations

The train total calculation of an analyte is the sum of two or more fractions of train components. Calculations will be carried out to at least one decimal place beyond that of the acquired data and should be rounded after final calculations to two significant figures for each analyte for each train total. Rounding of numbers should conform to procedures found in ASTM standards.

Figure 9-1. Internal Data Review Flowchart

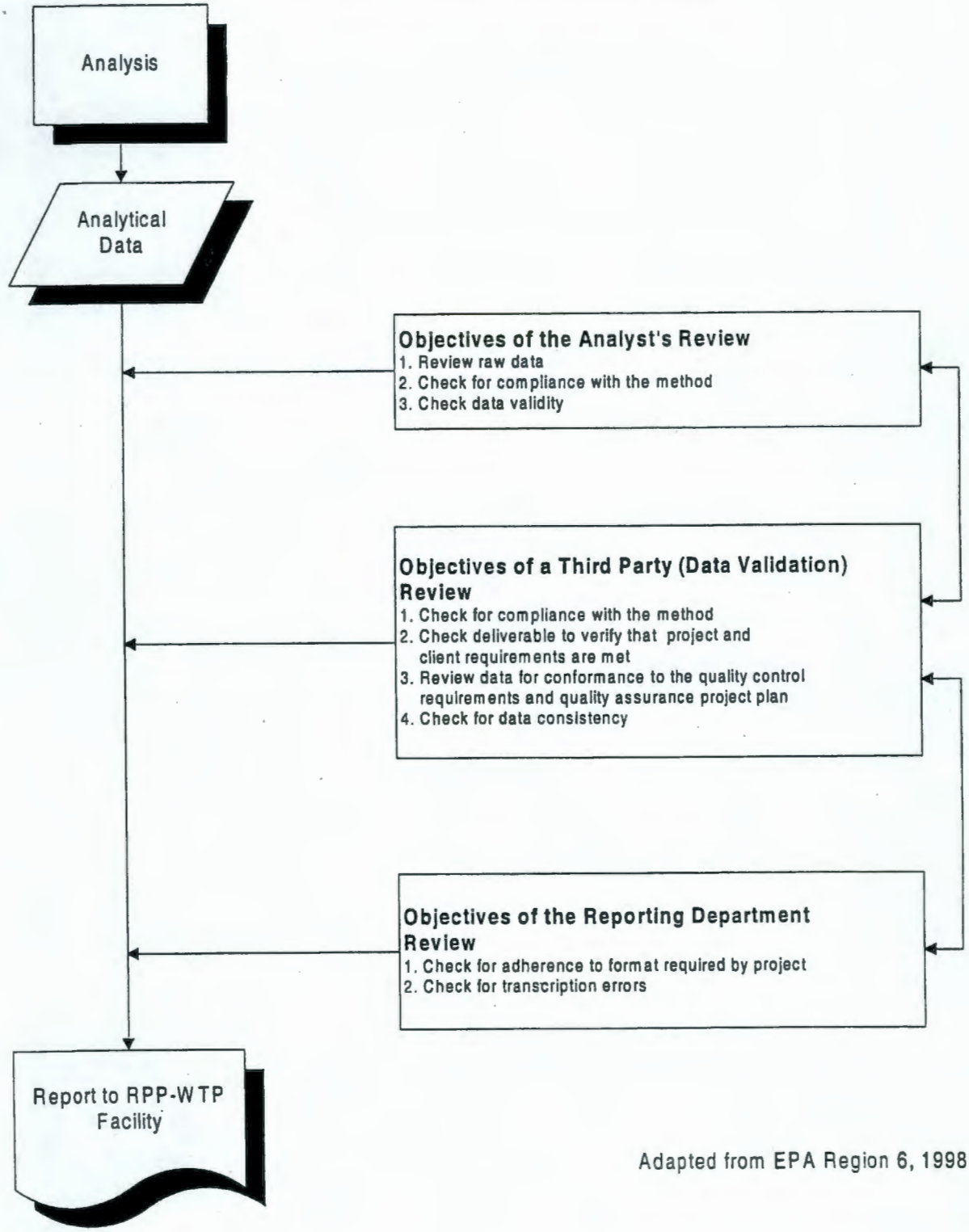

Adapted from EPA Region 6, 1998

Figure 9-2. Data Validation and Review Flowchart

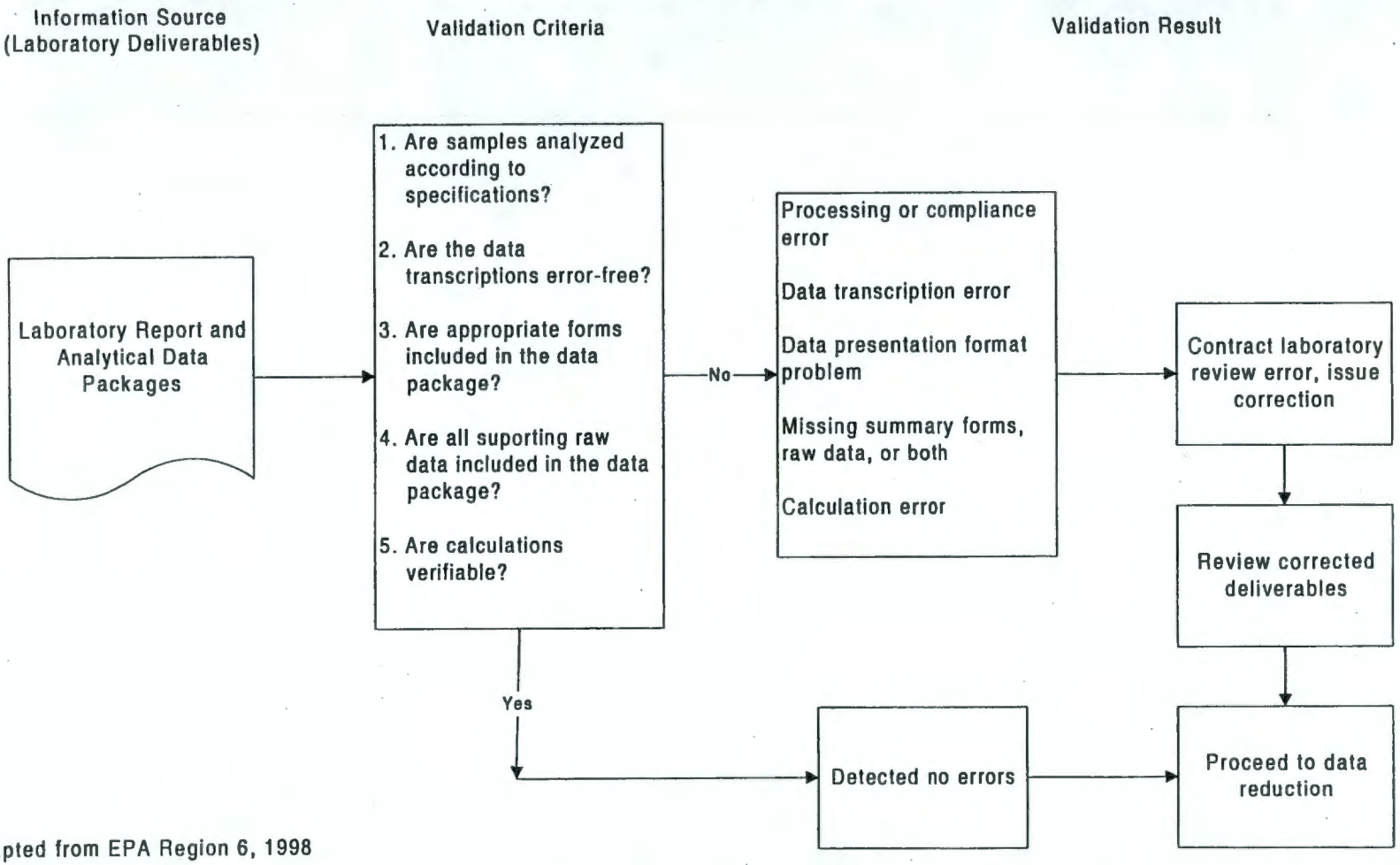

Adapted from EPA Region 6, 1998

10. Internal Quality Assurance Control Checks and Frequency

Field sampling equipment will be checked onsite by the sampling contractor to verify that the equipment has arrived undamaged. The field checks are shown in Table 10-1.

The location where the offgas sampling will occur, the number of sampling traverse points, and the cross-sectional layout of each traverse point will be determined using EPA Method 1 (40 CFR 60 Appendix A), as described in section 5.1. During facility commissioning, the absence of offgas cyclonic flow at the proposed offgas sampling location will be determined using Step 2.4 of EPA Method 1.

Preliminary calculation checks will be made at the RPP-WTP after each sampling run to verify that the reference method criteria for offgas velocity and volumetric flow rate as determined by EPA Method 2 (40 CFR 60 Appendix A) and the method criteria for moisture content as determined by EPA Method 4 (40 CFR 60 Appendix A) have been met. The sampling contractor field leader will be present at the RPP-WTP for the duration of the environmental performance demonstration. The sampling contractor field leader will review all calculations and sampling rates, visually inspect all samples, and determine if valid samples are being obtained. Any samples outside the established limits may be voided. Questionable samples that would produce fewer than three valid sampling runs per demonstration condition will be repeated to ensure that an adequate number of valid samples are obtained. Refer to section 14 for appropriate corrective action procedures.

All internal QC checks and frequencies for the laboratory analyses are contained in the specific methods. The analytical laboratory will perform these internal QC checks. The analytical laboratory will be accredited by the State of Washington.

A summary of QC samples to be analyzed in the demonstration program is presented in Table 10-2. One field blank and one method blank will be required per analysis batch of samples from the isokinetic sampling trains. (Field blanks are sample trains that are set up, leak-checked, recovered, and analyzed as a sample). Delays may require that these samples be shipped and analyzed in more than one batch. All samples for PODC analysis by GC/MS SW-846 Method 8260B will be spiked with internal standards before analysis. Surrogate spikes will be added before organic analysis.

The acceptance criteria for spike recoveries or duplicate analyses were presented in Table 4-1 as QC objectives. Any samples with results outside this range will be reanalyzed.

Table 10-1. Field Checks of Sampling Equipment

Equipment	Checked Against	Allowable Difference
Method 5 meter box	Critical orifice	± 5 %
VOST [a] meter box	Bubble meter	± 5 %
Pitot tube	Inspection	No visible damage
Digital temperature indicator	Millivolt signal	± 5 %
Thermocouples	ASTM [b] -3°F thermometer	± 1 %
Probe nozzles	Caliper	± 0.004 inch

[a] VOST - volatile organic sampling train
[b] ASTM - American Society for Testing and Materials

Table 10-2. Quality Assurance Samples for Performance Demonstration of Each Melter System Under Each Condition

Sample Stream	Parameter	No. of Samples	Field Duplicates	Blanks	MS/MSD	SW-846 Analytical Method [a]
PODC Spike Solutions [b]	PODCs TBD [d]	1	1	1 dilution solvent	1	Method TBD [c]
Offgas	Volatile organics (boiling point from 30 to 100 °C)	16 pair	5 pair	4 field blank 4 trip blank	N/A [d]	Method 8260B
	Volatile organics (boiling point < 30 ° C)	4	1	2 field blanks 4 trip blanks	1 field spike bag	Method 8260B
	Semivolatile organics (boiling point > 100 °C)	4	1	1 field blank 1 method blank	2	Method 8270C
	PCDD, PCDF, PCBs	4	1	1 field blank 1 trip blank	2	Methods 8290. 1668
	Total Organics: [f]					
	Volatile organics (bags)	4	1	2 field blanks 4 trip blanks	1 field spike bag	To Guidance
	Volatile organics (condensate)	4	1	2 field blanks 4 trip blanks	N/A [e]	To Guidance
	Semivolatile organics	4	1	1 trip blank 2 field blanks	N/A [e]	To Guidance
	Nonvolatile organics	4	1	1 trip blank 2 field blanks	N/A [e]	To Guidance
	Metals [e]	4	1	1 field blank 1 trip blank	2 + 1 lab control	Methods 6010, 7470 (Hg)
	HCl, Cl_2	4	1	1 acidified water 1 NaOH 1 deionized water	2 HCl 2 Cl_2 1 lab control – Cl	9057
Scrubber Liquor	PODCs	4	1	1 field blanks 1 trip blanks	1	Method TBD [c]
Glass Waste Form	PODCs	4	1	1 field blanks 1 trip blanks	1	Method TBD [c]
	Metals	4	1	1 field blanks 1 trip blanks	2	Method 6010, 7470 (Hg)

[a] Method refers to SW-846 (EPA 1997a), unless otherwise specified.
[b] PODC spike solution will be sampled once.
[c] TBD - to be determined
[d] N/A - Not applicable
[e] Metals will be sampled only under SRE conditions.
[f] Method in accordance with *Guidance for Total Organics* (EPA 1996)

11. Performance and System Audits and Frequency

The laboratory analytical manager and the RPP-WTP QA manager, or designated representative, will audit samplings by observing sampling operations. The analytical performance of the replicate analysis and spiked sample procedures outlined in section 8 of this document will also be audited.

Both performance and system audits will be conducted using the following procedures:

- All dry-gas meter systems will be audited for accuracy in the field by the use of a critical orifice or bubble meter.

- Control samples for analytical procedures will be analyzed.

- Filter and reagent blanks will be returned to the laboratory for analysis along with the samples.

- Sampling contractor field personnel will verify and document sampling equipment calibration before use. The environmental performance demonstration manager and the RPP-WTP QA manager, or designated representative, will review or observe the samplers' auditing procedures.

If directed by Ecology, EPA organic gas audit cylinders will be used to audit the SW-846 Method 0031 sampling procedure. Duplicate samples will be collected from each cylinder and used to determine the precision and accuracy of the sampling method. Results will be reported for confirmation of accuracy within ± 50 %.

If directed by Ecology, an audit solution provided by EPA will be analyzed for HCl. Results will be reported for confirmation of accuracy within ± 50 %.

If directed by Ecology, an audit sample (spiked XAD-2 resin sample) provided by EPA will be analyzed for 11 dioxins and 14 furan isomers. Results will be reported for confirmation of accuracy within ± 50 %. Additional audits that may be directed by Ecology include a metal audit sample, PCB audit sample, and a continuous emissions monitor audit using audit gases provided by EPA.

The RPP-WTP QA manager, or designated representative, will perform an independent QA oversight function associated with the environmental performance demonstration program. Corrective actions will be implemented per section 14 and RPP-WTP corrective action requirements. The RPP-WTP QA manager, or designated representative, will have the following responsibilities:

- Surveillance and inspecting process equipment, process controls, data acquisition and recording systems, process operations, and sampling activities, for compliance with this QAPjP and the *Environmental Performance Demonstration Plan*

- Performing audits of the analytical laboratories for compliance with this QAPjP prior to the environmental performance demonstration

- Reviewing stack sampling and analytical reports for completeness and accuracy

- Documenting the results of these inspections and audits in a written report that will be included in the environmental performance demonstration program files

12. Preventive Maintenance Procedures and Schedules

In order to ensure a successful EPDP, the sampling contractor and the analytical contractor will use preventive maintenance to guarantee sampling equipment and laboratory instrumentation are in good working order.

12.1. Sampling System Maintenance

All equipment used in offgas measuring systems must be maintained in good operating condition. A routine preventive maintenance program will be used to verify that sampling systems are operating properly. This program will have three major components: short-interval inspection, replacement of obsolete or damaged components, and scheduled disassembly and overhaul.

The short-interval inspection program will consist of inspecting each component of the sampling train after each job. This inspection will be accomplished after the post-demonstration calibration checks, and will include operating and inspecting each component to detect damage. If there is any potential to effect the integrity of the sample, short-interval inspections will be performed after sample extraction.

The operation of the sampling equipment will be checked daily during the environmental performance demonstration. As is standard practice, sufficient spare equipment will be shipped to the demonstration site so that defective equipment can be replaced promptly, to minimize down time. Spare reagents will also be taken to the field in case a sampling run has to be repeated.

12.2. Laboratory Instrument Maintenance

The analytical contractor will follow preventive maintenance schedules recommended by the equipment and instrument manufacturers, and will document maintenance activities in logbooks kept with each major analytical instrument. Expendable items and routine spare parts will be maintained with each instrument. Non-routine items will be covered under maintenance contracts signed with instrument manufacturers or other commercial service contractors so as to guarantee rapid service, if required.

13. Assessment Procedures for Accuracy, Precision, and Completeness

This section presents the specific calculations that will be used to describe the following data quality indicators: analytical accuracy, analytical precision, representativeness, and completeness.

13.1. Analytical Accuracy

Analytical accuracy can be estimated by calculating the percent recovery (%R) of laboratory matrix spike samples using the following equation described in *Preparation Aids for the Development of Category II Quality Assurance Project Plans* (EPA 1991):

$$\%R = \left(\frac{s - u}{C_{sa}}\right)100$$

Where

s is measured concentration in spiked laboratory aliquot
u is measured concentration in unspiked laboratory aliquot
C_{sa} is actual concentration of spike added

Accuracy can also be estimated by calculating percent recovery (%R) for the use of standard reference materials (SRM) or surrogates as outlined in *Preparation Aids for the Development of Category II Quality Assurance Project Plans* using the following:

$$\%R = \left(\frac{C_m}{C_{srm}}\right)100$$

Where

C_m is measured concentration of SRM or surrogate
C_{srm} is actual concentration of SRM or surrogate

Table 4-1 identifies those parameters for which accuracy will be estimated.

13.2. Analytical Precision

Precision can be estimated by analyzing matrix spikes and matrix spike duplicates. The relative percent difference between the analysis results for the matrix spike samples and the matrix spike duplicate samples will be calculated as outlined in *Preparation Aids for the Development of Category II Quality Assurance Project Plans*:

$$RPD = \frac{|S_{ms} - S_{msd}|}{\left(\frac{S_{ms} + S_{msd}}{2}\right)} \times 100$$

Where

ms is matrix spike
msd is matrix spike duplicate

Precision also can be estimated by analyzing duplicate samples. The relative percent difference between the analyte levels measured in these samples will be calculated using the following equation provided in *Preparation Aids for the Development of Category II Quality Assurance Project Plans*:

$$RPD = \frac{(C_1 - C_2)}{\left(\frac{C_1 + C_2}{2}\right)} \times 100$$

Where

C_1 is larger of the two observed values
C_2 is smaller of the two observed values

Table 4-1 identifies those parameters for which precision will be estimated based on the results of analyzing field duplicates or matrix spikes and matrix spike duplicates.

13.3. Representativeness

Representativeness is the degree to which a sample or a group of samples is indicative of the population being studied. This qualitative QA objective involves sample size, sample volume, sampling times, and sampling locations. The QA goal will be to obtain an adequate number of samples that represent the various waste streams at the time samples are collected. The sample size is determined by the analytical methodology and MDL requirements.

13.4. Completeness

Completeness will be reported as the percentage of all measurements judged to be valid. The formula used to calculate completeness, presented *Preparation Aids for the Development of Category II Quality Assurance Project Plans*, is as follows:

$$\%C = \left(\frac{V}{n}\right)100$$

Where

V is number of measurements judged valid
n is total number of measurements planned

14. Corrective Action

The need for corrective action will occur when a circumstance arises that adversely affects the quality of the data output. In most instances, the personnel conducting the field work and the laboratory analyses will be in the best position to recognize problems that will affect quality.

If the nonconforming situation occurs in the field, the decision on whether to take corrective action, and which action or actions to take, will be made by the environmental performance demonstration manager, the RPP-WTP QA manager or designee, and the sampling contractor manager. If the nonconforming situation occurs in the analytical laboratory, corrective actions will be determined by the environmental performance demonstration manager, the RPP-WTP QA manager or designee, and the analytical contractor manager. When a corrective action is taken, the sampling or analytical team members will be responsible for notifying the RPP-WTP QA manager or designee so that, if necessary, QA surveillance of the affected sampling or analysis system can be intensified. Any nonconformance and corrective action reports prepared by the sampling contractor or the analytical contractor will become part of the EPDP's record.

A second recognition level of the need for corrective action will be determined by the analytical contractor manager, who will determine the need for corrective action from the results of the analytical QA tests and from the review of the QA data generated during the environmental performance demonstration. The analytical contractor manager will be responsible for initiating corrective action by immediately notifying the environmental performance demonstration manager during the sample analysis phase. The appropriate management will then be responsible for instituting corrective action, and verifying that the corrective actions produce the desired results. Ultimately, the personnel performing and checking the sampling and analysis procedures, and results must participate in decisions to take corrective actions. To reach the appropriate decision, each individual must understand the program objectives and data quality required to meet these objectives.

If a situation arises that requires corrective action, the following closed-loop, corrective action system will be used per *Hazardous Waste Combustion Unit Permitting Manual* (EPA 1998b):

- Define the problem and ensure problem is documented in a corrective action system
- Assign responsibility for investigating the problem
- Investigate and determine the root cause of the problem
- Determine the course of corrective action needed to eliminate the root cause of the problem
- Assign responsibility for implementing the corrective action
- Evaluate the effectiveness of the corrective action and implement the correction
- Verify that the corrective action has eliminated the root cause of the problem
- If not completely successful, perform the process again

15. Quality Assurance Reporting

Effective management of environmental measurement and performance demonstration will require timely assessment and review of measurement activities. Such assessment and review will require effective interaction and feedback among team members. Periodic internal reports will be necessary to provide an ongoing evaluation and measurement of data quality. Such reports may include the following:

- Summary of project activities and general QA program status
- Summary of unscheduled maintenance activities
- Summary of corrective action activities
- Status of unresolved problems
- Audit results

Periodic meetings will be held during the sampling program to review project status and plan for upcoming activities. All non-conformances to corrective action quality will be reported to the RPP-WTP QA Manager. As a minimum, the RPP-WTP manager, operations manager, and QA manager, as well as the environmental performance demonstration manager and the sampling contractor field leader, or their designated representatives, will attend these meetings.

Results of inspections and summaries of problems and corrective action requests will be reported to project management and the RPP-WTP QA manager or designee. The analytical QA manager will discuss unresolved requests for corrective action with the sampling contractor project manager, who will then take measures to resolve problems. The sampling contractor project manager will then reevaluate the problem area to ensure that appropriate corrective actions were implemented. Copies of any reports written by the EPDP staff or contractors concerning quality issues (such as, non-conformance, deficiency) will be provided to the RPP-WTP QA manager or designee as soon as possible.

The performance demonstration report will include a separate QA section documenting QA and QC activities that support the credibility of the data and the validity of the conclusions.

The QA section will include the following items, as appropriate:

- Changes made in the field to the QAPjP that do not impact the results of the demonstration program

- Limitations or constraints on the applicability of the data

- Results of technical systems and performance evaluation QC audits

- Assessments of data quality in terms of precision, accuracy, completeness, MDL, representativeness, and comparability

References

40 CFR 60. *Protection of the Environment.* Code of Federal Regulations.

62 FR 67788. 1997. *Total Mercury and Particulate Continuous Emissions Monitoring Systems; Measurement of Low Level Particulate Emissions; Implementation at hazardous Waste Combustors; Proposed Rule-Notice of Data Availability and Request for Comments*, Vol. 62, No. 249, 30 December 1998. Federal Register.

BNFL. 2000a. *Environmental Performance Demonstration Plan,* PL-W375-EN00003, Revision 0, 31 March 2000. BNFL Inc., Richland, Washington, USA.

BNFL. 2000b. *RPP-WTP Dangerous Waste Permit Application*, BNFL-5193-RCRA-01, Revision 1, 31 March 2000. BNFL Inc., Richland, Washington, USA.

BNFL. 2000c. *River Protection Project –Dangerous Waste Training Plan,* PL-W375-EN00005, Revision 0, 31 March 2000. BNFL Inc., Richland, Washington, USA.

CARB. 1990. *Method 501 Determination of Size Distribution of Particulate Matter Emissions from Stationary Sources*, Stationary Source Test Methods, Volume 1, Methods for Determining Compliance with District Nonvehicular (Stationary Source) Emission Standards. California Air Resources Board Monitoring and Laboratory Division, Los Alomos, California, USA.

EPA. 1972. *Quality Assurance Handbook for Air Pollution Measurement Systems*, Volume III, EPA 600/4-72-02-7b. US Environmental Protection Agency, Washington, D.C., USA.

EPA. 1983. *Interim Guidelines and Specifications for Preparing Quality Assurance Project Plans*, Office of Exploratory Research, Quality Assurance Management Staff, QAMS-005/80, EPA 600/4-83-004. US Environmental Protection Agency, Washington, D.C., USA.

EPA. 1986. *Practical Guide - Trial Burns for Hazardous Waste Incinerators*, EPA/600-2-86. US Environmental Protection Agency, Washington, D.C., USA.

EPA. 1989a. *Guidance on Setting Permit Conditions and Reporting Trial Burn Results*, EPA/625/6-89/019. US Environmental Protection Agency, Washington, D.C., USA.

EPA. 1989b. *Hazardous Waste Incineration Measurement Guidance Manual*, EPA/625/6-89/021, US Environmental Protection Agency, Washington, D.C., USA.

EPA. 1991. *Preparation Aids for the Development of Category II Quality Assurance Project Plans*, EPA/600/8-91/004. US Environmental Protection Agency, Washington, D.C., USA.

EPA. 1994a. *National Functional Guidelines for Inorganic Data Review,* NTIS: PB94-963502 and NTIS: PB94-963501. US Environmental Protection Agency, Washington, D.C., USA.

EPA. 1994b. *National Functional Guidelines for Organic Data Review,* NTIS: PB94-963501. US Environmental Protection Agency, Washington, D.C., USA.

EPA. 1996. *Guidance for Total Organics*, Draft Final Report, EPA/600/4-96/036. US Environmental Protection Agency, Washington, D.C., USA.

EPA. 1997a. *Test Methods for Evaluating Solid Waste, Physical Chemical Methods,* SW-846, Third Edition. US Environmental Protection Agency, Washington, D.C., USA.

EPA. 1997b. *Toxic Polychlorinated Biphenyls by Isotope Dilution High Resolution Gas Chromatography/High Resolution Mass Spectrometry* (Draft Method 1668). US Environmental Protection Agency, Washington, D.C., USA.

EPA. 1998a. *Guidance on Collection of Emissions Data to Support Site-Specific Risk Assessments at Hazardous Waste Combustion Facilities*, Peer Review Draft, EPA-530-D-98-002. US Environmental Protection Agency, Washington, D.C., USA.

EPA. 1998b. *Hazardous Waste Combustion Unit Permitting Manual,* Component 2, "How to Review a Quality Assurance Project Plan". US Environmental Protection Agency, Region 6 Center for Combustion Science and Engineering, Dallas, Texas, USA.

WAC 173-303. *Dangerous Waste Regulations*. Washington Administrative Code.

Appendix A
Completion Schedule

Appendix A
Completion Schedule

This Quality Assurance Project Plan (QAPjP) for the RPP-WTP *Environmental Performance Demonstration Plan* (BNFL 2000a) is intended to provide early information on the demonstration approach and expected level of activities. Design of the RPP-WTP treatment processes is still being developed. As a result, information that is dependent on the design has not been included in this document. Supplement 8, Completion Schedule, of the RPP-WTP DWPA contains detailed information regarding the missing information.

Supplement 4

Supplement 4
Seismic Analysis and Design Approach

BNFL Inc.

Document title: **Seismic Analysis and Design Approach**

Department: Engineering

Contract title: River Protection Project – Waste Treatment Plant

Contract number: DE-AC06-96RL13308

Author(s): Gopi Aiyar Farhang Ostadan

Principal Author Signature

Document Number: RPT-W375-RU00005, Rev. D

Checked by: William White

Principal Checker Signature

Date of issue: August 6, 1999

Issue status: Approved

Approved by: Dave Houghton

Approver's position: Civil, Structural and Architectural Functional Manager

Approver's signature

ISSUED BY
RPP-WTP PDC
INIT DATE

BNFL Inc.
RPP-WTP Project
3000 George Washington Way
Richland, WA 99352
United States of America
Tel: 509 371 3500
Fax: 509 371 3504

History sheet

Rev	Date	Reason for revision	Revised by
A	4/30/99	Issued for internal review	-
B	5/18/99	Issued for PSC Review and RU Level 1 Meeting	Gopi Aiyar
C	6/10/99	Issued for RU Topical Meting	Gopi Aiyar
D	8/6/99	Issued for RU SER	Gopi Aiyar

Contents

Item — Page Number

Acronyms vi

1. Introduction 1

2. Scope 1

3. Facility Location and Description 1

3.1. Facility Location 1

3.2. Facility Description 2
3.2.1. Structures 2
3.2.2. Systems 2
3.2.3. Components 2

4. Applicable Documents 3

4.1. DOE Publications 3

4.2. NRC Publications 3

4.3. Industry Codes and Standards 4

4.4. Other Publications 4

5. Categorization of Structures, Systems and Components 6

6. Design Basis Earthquake 7

6.1. General 7

6.2. Design Response Spectra 7

6.3. Design Time Histories 12

7. Seismic Analysis 12

7.1. General 12

7.2. Seismic Analysis of SC-I and SC-II Structures, Systems and Components 13
7.2.1. Seismic Analysis of SC-I and SC-II Structures 13
7.2.2. Seismic analysis of SC-I and SC-II Systems and Components 17

7.3. Seismic Analysis of SC-III and SC-IV Structures, Systems and Components 22
7.3.1. General 22
7.3.2. Seismic Analysis of SC-III and SC-IV Building Structures 22
7.3.3. Seismic Analysis of SC-III and SC-IV Nonbuilding Structures 23
7.3.4. Seismic Analysis of SC-III and SC-IV Systems and Components 24
7.3.5. Interaction of SC-III/SC-IV Systems and Components with SC-I/SC-II Systems and Components 24

8. Seismic Design 25

8.1. General 25

Contents

Item — Page Number

8.2. Design Methods 25

8.3. Load Combinations and Structural Acceptance Criteria 25
8.3.1. Notations 25
8.3.2. General Notes on the Load Combinations 25
8.3.3. SC-I Structures 26
8.3.4. SC-II Structures 26
8.3.5. SC-III and SC-IV Structures 27

8.4. Stability Requirements for Building Structures 27
8.4.1. SC-I and SC-II Building Structures 27
8.4.2. SC-III and SC-IV Building Structures 28

8.5. Anchorage 28
8.5.1. Anchor Bolts and Concrete Expansion Anchors 28
8.5.2. Anchorage of Walls 28

8.6. Story Drift 29
8.6.1. SC-I and SC-II Building Structures 29
8.6.2. SC-III and SC-IV Building Structures 29

8.7. Building Separation 29
8.7.1. SC-I and SC-II Structures 29
8.7.2. SC-III and SC-IV Structures 30
8.7.3. Interaction of SC-III/SC-IV Structures with SC-I/SC-II Structures 30

8.8. Seismic Proportioning and Detailing 30
8.8.1. General 30
8.8.2. Requirements for Reinforced Concrete 31
8.8.3. Requirements for Structural Steel 32
8.8.4. Requirements for Masonry 32

9. Engineering Quality Assurance and Peer Review 32

9.1. Engineering Quality Assurance 32

9.2. Peer Review 32

9.3. Use of Computer Programs 33

10. Commentary 33

FIGURES

Figure 1. Hanford Site Horizontal and Vertical Response Spectra (2000-Year Motion) 5% Damping 9

Figure 2. RPP-WTP DBE Horizontal Response Spectra (0.50%, 2%, 3%, 4%, 5%, 7%, 10%, 12% Damping) 10

Figure 3. RPP-WTP DBE Vertical Response Spectra (0.50%, 2%, 3%, 4%, 5%, 7%, 10%, 12% Damping) .11

Figure 4. Damping Values for Response Spectra Analysis of Piping 20

Acronyms

ACI	American Concrete Institute
AISC	American Institute of Steel Construction
ANSI	American National Standards Institute
ASCE	American Society of Civil Engineers
ASME	American Society of Mechanical Engineers
ASTM	American Society for Testing and Materials
AWS	American Welding Society
BNFL	British Nuclear Fuels
DBE	Design Basis Earthquake
DOE	US Department of Energy
EPRI	Electric Power Research Institute
ICBO	International Conference of Building Officials
MCC	Motor Control Center
NPH	Natural Phenomena Hazard
NRC	Nuclear Regulatory Commission
PC	Performance Category
PGA	Peak Ground Acceleration
PRA	Probabilistic Risk Analysis
PSDF	Power Spectral Density Function
RG	Regulatory Guide
RPP-WTP	River Protection Project – Waste Treatment Plant
RRS	Required Response Spectrum
SASSI	A System for Analysis of Soil-Structure Interaction
SRD	Safety Requirements Document
SRP	Standard Review Plan
SRSS	Square Root of the Sum of the Squares
SSC	Structure, System and Component
SSI	Soil-Structure Interaction
TRS	Test Response Spectrum
TWRS-P	Tank Waste Remediation System Privatization
UBC	Uniform Building Code

1. Introduction

The River Protection Project – Waste Treatment Plant (RPP-WTP) Facility (formerly referred to as "TWRS-P Facility") processes and stores radioactive and hazardous materials. Consequently, it is necessary to ensure that the facility can provide adequate level of safety to facility and co-located workers and the public. To achieve this objective, the facility is required to be designed to withstand the effects of natural phenomena hazards (NPH), such as, earthquakes, without significant damage or loss of safety function.

2. Scope

These Criteria shall govern the seismic analysis and design of the RPP-WTP Facility.

The analysis criteria include dynamic as well as static analyses. The dynamic analysis criteria cover development of design response spectra for the Design Basis Earthquake (DBE) and associated input time histories, soil-structure interaction modeling and analysis, and generation of seismic loads and in-structure response spectra. The static analysis criteria cover computation of seismic loads using static force procedures.

The design criteria discuss combination of seismic loads with other loads for the structural design, proportioning and detailing of the structure to ensure ductile behavior, evaluation of foundation stability against sliding and overturning, story drift, building separation and anchorage.

The scope of these Criteria does not include determination of the DBE Peak Ground Acceleration (PGA). The PGA is established as described in the Document, RPT-W375-RU0002, "TWRS-P Facility Design Basis Earthquake – Peak Ground Acceleration, Seismic Response Spectra, and Seismic Design Approach" (Ref. 4.4.1). Accordingly, DBE with 0.26 g horizontal PGA will be used for the design of the RPP-WTP Facility.

These Criteria meet the seismic design requirements of DOE-STD-1020-94, "Natural Phenomena Hazards – Design and Evaluation Criteria for Department of Energy Facilities" (Ref. 4.1.1) as modified by the Document, RPT-W375-RU00003, "Applicability of DOE Documents to the Design of TWRS-P Facility for Natural Phenomena Hazards" (Ref. 4.4.2). The bases for selection of DOE-STD-1020-94 for seismic design of the RPP-WTP Facility are given in the Document, RPT-W375-RU00002 (Ref. 4.4.1).

3. Facility Location and Description

3.1. Facility Location

The RPP-WTP Facility will be located in the 200 East Area of the Hanford Site in Richland, Washington. Per UBC (Ref. 4.3.9), the site is located in Seismic Zone 2B.

3.2. Facility Description

Some of the major facility structures, systems and components are listed below.

3.2.1. Structures

- Pretreatment Building
- High Level Waste Vitrification Building
- Low Activity Waste Vitrification Building
- Administration Building
- Service Building
- Glass Former Store
- Wet Chemical Store
- Water Treatment Building
- Steam Plant
- Exhaust stacks
- Waste Transfer Lines

Pretreatment, HLW Vitrification and LAW Vitrification Buildings

These are multi-story structures partially embedded in ground. The materials of construction include reinforced concrete and structural steel.

All Other Structures

These are one and two-story structures founded at grade. The materials of construction include reinforced concrete, structural steel, and masonry.

3.2.2. Systems

- Piping
- Ventilation
- Off-Gas
- Electrical
- Fire Detection, Alarm and Suppression
- Communications
- Security

3.2.3. Components

- Tanks
- Process vessels
- Melters
- Bridge cranes
- Monorails
- Diesel generators
- Shield windows
- Manipulators

- Bulges
- Cabinets
- Compressors
- Pumps
- MCCs

4. Applicable Documents

The following documents shall govern the seismic analysis and design of the RPP-WTP Facility structures, systems and components.

4.1. DOE Publications

4.1.1.	DOE-STD-1020-94 including Change Notice #1 dated Jan 1996	Natural Phenomena Hazards Design and Evaluation for Department of Energy Facilities
4.1.2.	DOE-STD-1023-95 including Change Notice #1 dated Jan 1996	Natural Phenomena Hazards Assessment Criteria
4.1.3.	BNL 52361, Rev. 10/95	Seismic Design and Evaluation Guidelines for the Department of Energy High-Level Waste Storage Tanks and Appurtenances

4.2. NRC Publications

4.2.1.	Regulatory Guide 1.92, Rev. 1	Combining Modal Responses and Spatial Components in Seismic Response analysis
4.2.2.	Regulatory Guide 1.122, Rev. 1	Development of Floor Design Response Spectra for Seismic Design of Floor-Supported Equipment or Components
4.2.3.	Regulatory Guide 1.165, Rev. 0	Identification and Characterization of Seismic Sources and Determination of Safe Shutdown Earthquake Ground Motion
4.2.4.	Standard Review Plan, NUREG-0800, Section 3.7.1, Rev. 3 (Draft), 4/96	Seismic Design Parameters
4.2.5.	Standard Review Plan, NUREG-0800, Section 3.7.2, Rev. 3 (Draft), 4/96	Seismic System Analysis
4.2.6.	Standard Review Plan, NUREG-0800, Section 3.8.4, Rev. 2 (Draft), 4/96	Other Seismic Category I Structures

4.2.7.	Standard Review Plan, NUREG-0800, Section 3.8.5, Rev. 2 (Draft), 4/96	Foundations

4.3. Industry Codes and Standards

4.3.1.	ACI 318-95 and ACI 318R-95	Building Code Requirements for Structural Concrete and Commentary
4.3.2.	ACI 349-97 and ACI 349R-97	Code Requirements for Nuclear Safety-Related Concrete Structures and Commentary
4.3.3.	ACI 530-95	Building Code Requirements for Masonry Structures and Commentary
4.3.4.	AISC M016-89	Manual of Steel Construction – Allowable Stress Design, Ninth Edition
4.3.5.	ANSI/AISC N690-1994	Specification for the Design, Fabrication, and Erection of Steel Safety-Related Structures for Nuclear Facilities
4.3.6.	ASCE 4-98 (Draft)	Seismic Analysis of Safety-Related Nuclear Structures and Commentary
4.3.7.	1998 ASME Boiler and Pressure Vessel Code, Section III	Code Case N-411
4.3.8.	AWS D 1.4-98	Structural Welding Code-Reinforcing Steel
4.3.9.	1997 UBC	Uniform Building Code
4.3.10.	IEEE Std 344-1987	IEEE Recommended Practice for Seismic Qualification of Class 1E Equipment for Nuclear Power Generating Stations

4.4. Other Publications

4.4.1.	RPT-W375-RU00002, Rev. 2, by BNFL Inc.	TWRS-P Facility Design Basis Earthquake-Peak Ground Acceleration, Seismic Response Spectra, and Seismic Design Approach
4.4.2.	RPT-W375-RU00003, Rev. 1, by BNFL Inc.	Applicability of DOE Documents to the Design of TWRS-P Facility for Natural Phenomena Hazards
4.4.3.	RPT-W375-RU00004, Rev. 0, by BNFL Inc.	Validation of the Geomatrix Hanford Seismic Report for Use on the TWRS Privatization Project
4.4.4.	BNFL-5193-SRD-01, Rev. 2, by BNFL Inc.	TWRS-P Project Safety Requirement Document
4.4.5.	BNFL-5193-QAP-01, Rev. 4	TWRS-P Quality Assurance Program and Implementation Plan
4.4.6.	K70C515, Rev.0, by BNFL, Inc.	Code of Practice for Computer Program Use

4.4.7.	K70C518A, Rev. 0, by BNFL Inc.	Code of Practice for Engineering Calculations
4.4.8.	K70P555, Rev. 0, by BNFL, Inc.	Design Verification
4.4.9.	-	RPP-WTP Geotechnical Investigation Report (in development)
4.4.10.	Report No. UCB/GT/81-02, by Lysmer, et al., 1981, University of California, Berkeley, California	SASSI – A System for Analysis of Soil-Structure Interaction
4.4.11.	Report No. EERC 71-8, by Schnabel, et al., 1971, University of California, Berkeley, California	SHAKE – A Computer Program for Earthquake Response Analysis of Horizontally Layered Sites
4.4.12.	Report No. EERC 84-14, by Seed, et al., 1984, University of California, Berkeley, California	Moduli and Damping Factors for Dynamic Analyses of Cohesionless Soils
4.4.13.	Report No. EERC 88-15, by Sun, et al., 1988, University of California, Berkeley, California	Dynamic Moduli and Damping Ratios for Cohesive Soils
4.4.14.	Report by Idriss, 1990, H. Bolton Seed Memorial Symposium Proceedings, Volume 2	Response of Soft Soils During Earthquake
4.4.15.	Report No. EPRI TR-102293, 1993, by Electric Power Research Institute, Palo Alto, California	Guidelines for Determining Design Basis Ground Motions
4.4.16.	Report by Ostadan, 1988, Bechtel Power Corporation, San Francisco, California	Theoretical, Validation and User's Manuals for Computer Program SASSI
4.4.17.	BSIMQKE, 1984, by Bechtel Power Corporation, San Francisco, California	A Computer Program for Generation of Spectrum-Compatible Time Histories
4.4.18.	DATAN, 1991, by Bechtel Power Corporation, San Francisco, California	A Computer Program for Probabilistic Data Analysis
4.4.19.	3DG C01 00004, Rev. 1, by Bechtel Corporation, Houston, Texas	Seismic Analysis of Structures and Equipment for Nuclear Power Plants *(Note: This document is based on revision 3 of Bechtel Topical Report BC-TOP-4A, dated Sep 1974, which was approved by NRC on Oct 31, 1974.)*
4.4.20.	10 CFR 830.120 dated Jan 1998	Quality Assurance Requirements

4.4.21.	GT STRUDL, Version 9801-NT, by Georgia Tech Research Corporation, Atlanta, Georgia	Integrated CAE System for structural Engineering Analysis and Design
4.4.22	WHC-SD-W236A-TI-0002, Rev. 1A, by Geomatrix Consultants	Probabilistic Seismic Hazard Analysis-DOE Hanford Site, Washington
4.4.23.	Report dated 4/99 by Geomatrix Consultants	De-aggregation Analysis of the 200 West Area Ground Motion Hazard, Hanford Site, Washington

5. Categorization of Structures, Systems and Components

The RPP-WTP Facility structures, systems and components (SSCs) will be categorized as Seismic Category I, II, III, IV and V, as a consequence of their safety functions. These safety functions will be determined by the hazard evaluation process described in SRD, Appendix A, "Implementing Standards for Safety Standards and Requirements Identification" (Ref. 4.4.4) and by engineering analyses. Definitions of the seismic categories are as follows:

Seismic Category I (SC-I):

SSC important to safety and which has a seismic safety function.

Seismic Category II (SC-II):

SSC important to safety, whose failure during a seismic event could prevent a Seismic Category I SSC from performing its seismic safety function.

Seismic Category III (SC-III):

(a) SSC important to safety, but without seismic safety function.
(b) SSC not important to safety, but which has an inventory of radioactive or hazardous material in an amount less than an important to safety-significant quantity.

Seismic Category IV (SC-IV):

SSC not important to safety and without an inventory of radioactive or hazardous material, but requiring seismic protection.

Seismic Category V (SC-V):

SSC not important to safety and without any seismic design requirements.

DOE-STD-1020-94 (Ref. 4.1.1) uses NPH performance categorization ranging from PC-0 to PC-4. The correlation between the RPP-WTP Facility seismic categorization and DOE NPH performance categorization is as follows. The RPP-WTP Facility does not have a SSC designated as PC-4 *(See Section 10.5.a for explanation).*

RPP-WTP Seismic Category	Corresponding DOE NPH Performance Category
SC-I	PC-3 (See Note 1 below)
SC-II	PC-3 (See Note 1 below)
SC-III	PC-2
SC-IV	PC-1
SC-V	PC-0 (See Note 2 below)

Notes:

1. For the design of SC-I structures, no credit for inelastic energy absorption is taken; however, credit for inelastic energy absorption is allowed for the design of SC-II structures. See Section 10.5.b for explanation.

2. Since SC-V SSCs do not have seismic design requirements, they are not discussed in these Criteria.

6. Design Basis Earthquake

6.1. General

The BNFL Inc. document, RPT-W375-RU00002 (Ref. 4.4.1), establishes the DBE PGA for the RPP-WTP Facility site, based on PC-3 categorization of the Facility and consequent return period of 2,000 years per Table 2-1 of DOE-STD-1020-94 (Ref. 4.1.1). The PGA is based on the mean seismic hazard curve for the 200-East Area contained in the Geomatrix Consultants Report, WHC-SD-W236A-TI-002, "Probabilistic Seismic Hazard Analysis, DOE Hanford Site, Washington" (Ref. 4.4.22), corresponding to the 2,000-year return period. Accordingly, the value of the horizontal PGA for SC-I and SC-II facilities is 0.24 g. In addition, BNFL Inc. Document, RPT-W375-RU00004 (Ref. 4.4.3), contains independent evaluation of the Geomatrix Consultants Report and concludes that the seismic ground motion described therein is appropriate for the design of the RPP-WTP Facility. However, BNFL Inc. has conservatively elected to use a value of 0.26 g for SC-I and SC-II horizontal PGA, a value obtained from the mean seismic hazard curve for the 200-West Area corresponding to the 2,000-year return period. Consequently, the ground motion developed in the Geomatrix Consultants Report for the 200-West Area is adopted to develop the design response spectra and time histories for the RPP-WTP Facility application.

6.2. Design Response Spectra

The ground motion in the Geomatrix Consultants Report (Ref 4.4.22) is presented in terms of spectral acceleration values at 5% damping and spectral amplifications to construct acceleration response spectra at 0.50%, 2%, 7%, 10%, and 12% damping for various parts of the Hanford Site including the 200-East and 200-West Areas. The proposed ground motion spectral values include the effect of soil amplification at each area and represent the ground motion at the ground surface level in the free-field. Both horizontal and vertical response spectra are developed for each area at the above damping values. The acceleration response spectra at 5% damping for 200-East and 200-West Areas are shown in Figure 1. Since the acceleration response spectra for the 200-West Area envelop the spectra corresponding to the 200-East area at all frequencies, the response spectra for the 200-West Area are conservatively adopted to develop the RPP-WTP Facility DBE response spectra consistent with the adoption of 0.26 g PGA as described above. De-aggregation analyses of the 200-West Area horizontal and vertical spectra at 5% damping performed by Geomatrix Consultants (Ref. 4.4.23) show compliance with the requirements of Section 3.1.3 of DOE-STD-1023-95 (Ref. 4.1.2) and Appendix C of NRC RG 1.165 (Ref. 4.2.3).

Therefore, the horizontal response spectra are considered adequate for the RPP-WTP Facility design application.

As to the vertical response spectra, a dip exists at about 1Hz as shown in Figure 1. This is mainly due to the fact that the lower frequency portion of the response spectrum is strongly influenced by the Cascadia subduction zone events, whereas the remaining part of the spectrum is controlled by the shallow crustal events (Refs. 4.4.22 and 4.4.23). However, for design application, the dip is conservatively removed by increasing the spectral values at 1 Hz and 2 Hz by 25% and the spectral value at 3 Hz by 10%. In addition, the response spectra at 3% and 4% damping values are obtained from interpolation of the spectra at 2% and 5% damping using the log-interpolation relationship provided in Section 2.2 of ASCE 4 (Ref 4.3.6).

The plots of the horizontal and the modified vertical acceleration response spectra for all damping values are shown in Figures 2 and 3 for horizontal and vertical motions, respectively. These acceleration response spectra are used as design response spectra representing DBE for RPP-WTP Facility SC-I and SC-II structures defining ground motion in the free-field at the ground surface level. Following the recommendations of the Geomatrix report (Ref. 4.4.22), the horizontal and vertical response spectra are anchored to the PGA at 33Hz and 50 Hz, respectively. For structures with horizontal frequencies above 33 Hz, the PGA of 0.26 g shall be used. For structures with vertical frequencies above 50 Hz, the vertical PGA of 0.18 g shall be used.

Figure 1. Hanford Site Horizontal and Vertical Response Spectra (2000-Year Motion)
5% Damping

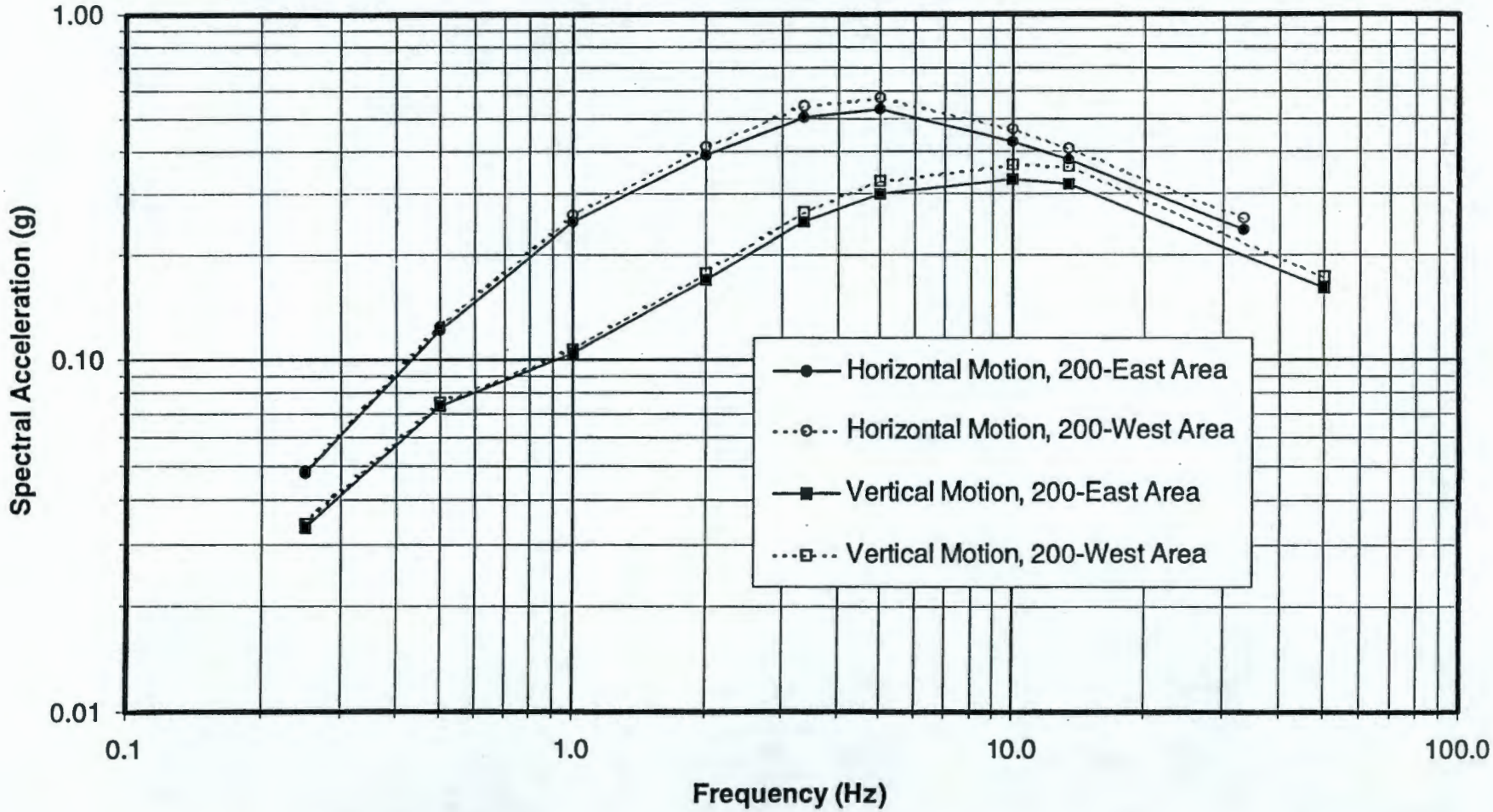

Figure 2. RPP-WTP DBE Horizontal Response Spectra (0.50%, 2%, 3%, 4%, 5%, 7%, 10%, 12% Damping)

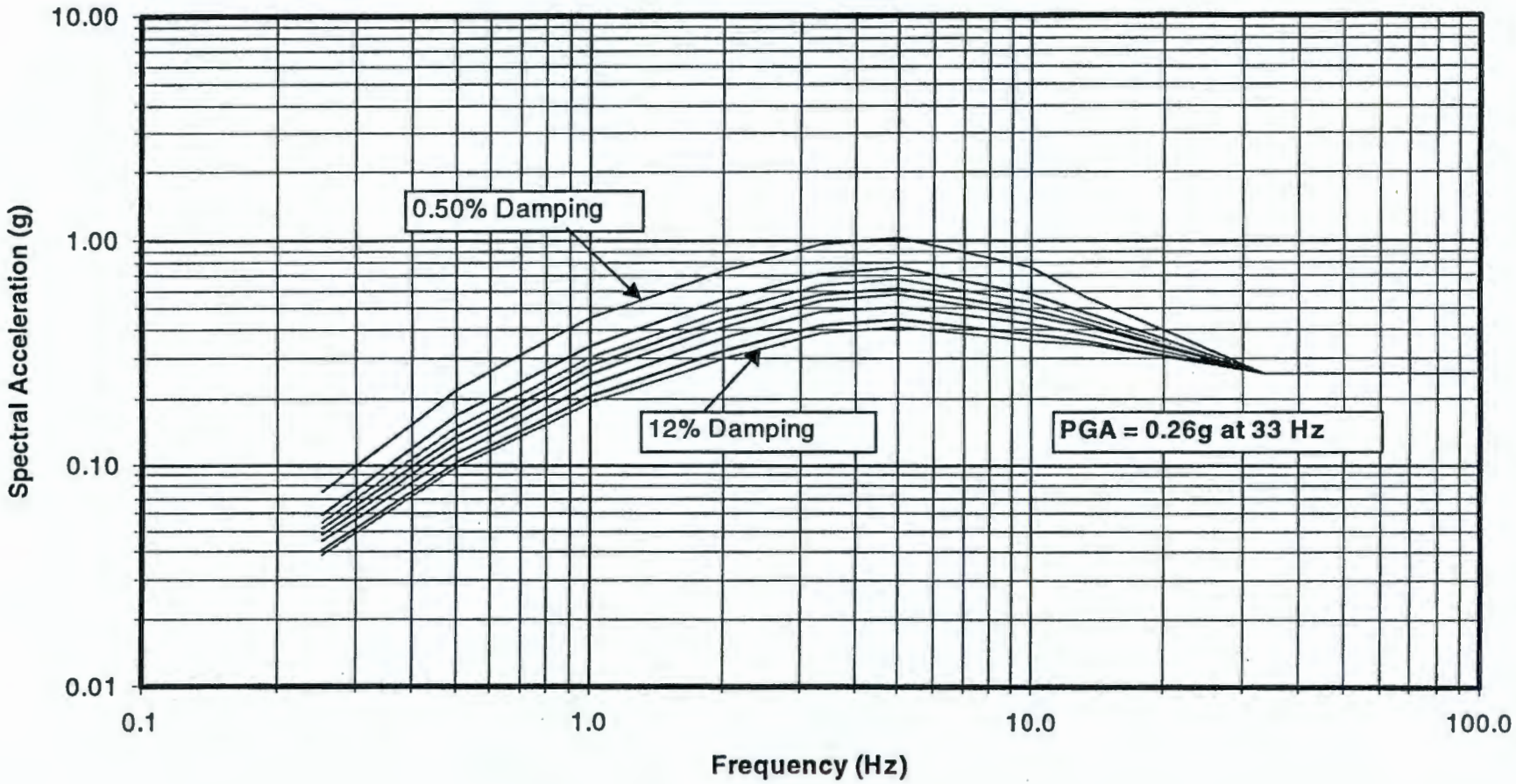

Figure 3. RPP-WTP DBE Vertical Response Spectra (0.50%, 2%, 3%, 4%, 5%, 7%, 10%, 12% Damping)

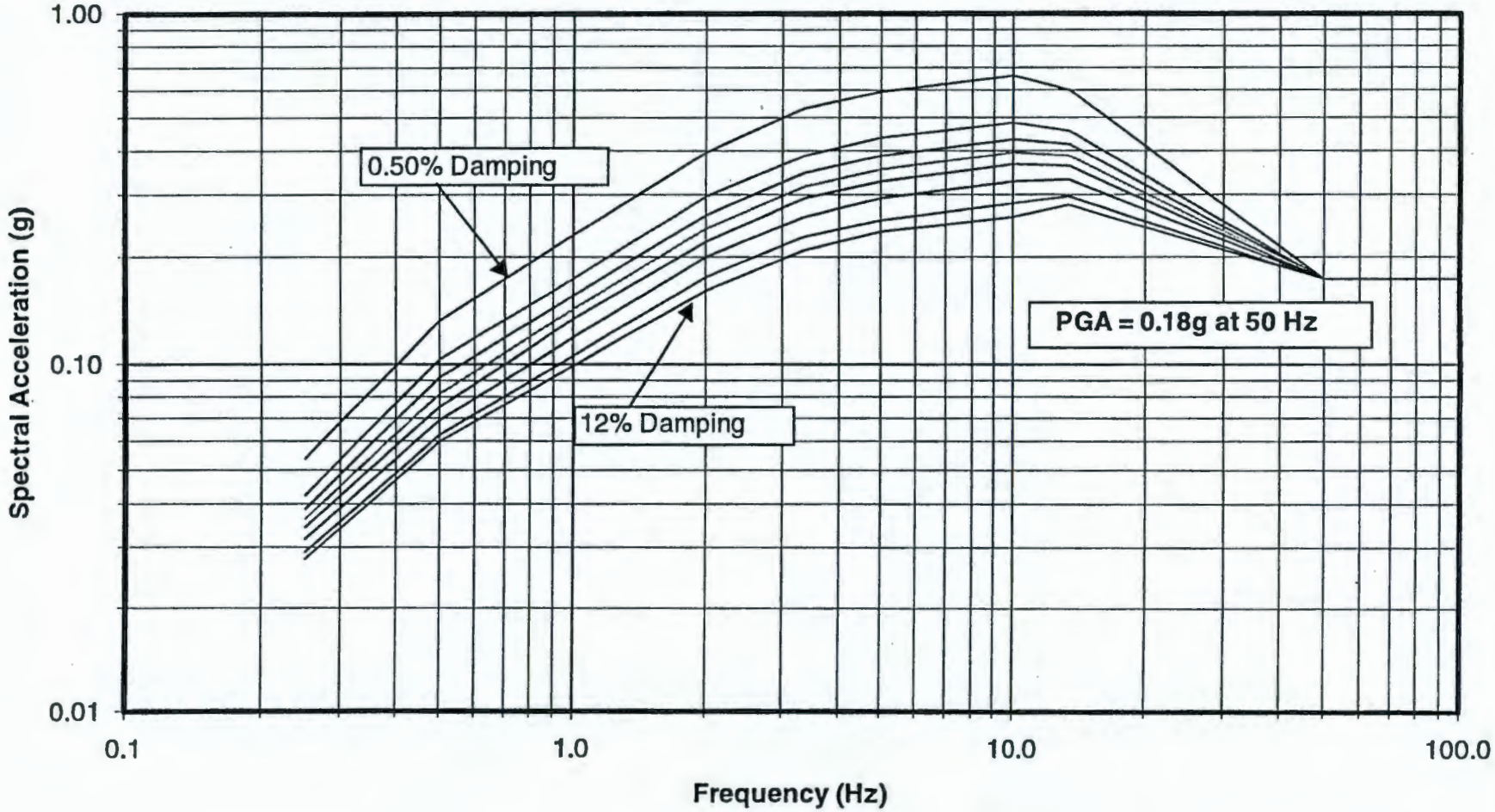

6.3. Design Time Histories

Following ASCE 4 (Ref. 4.3.6) and Section 3.7.1 of NUREG-0800 (Ref. 4.2.4), two horizontal acceleration-compatible time histories matching the horizontal response spectra and one vertical acceleration- compatible time history matching the vertical response spectra shall be generated. In generating the acceleration time histories the following requirements and recommendations shall be observed:

- Each component of the time history shall match the respective design response spectra following response spectrum matching requirements of ASCE 4 (Ref. 4.3.6) and Section 3.7.1 of NUREG-0800 (Ref. 4.2.4) at multiple damping simultaneously. The spectral damping used for generation of the time histories are selected to cover the range of applicable damping values described in Section 7.2.5. The applicable damping values for RPP-WTP Facility design application are 0.5%, 2%, 3%, 5%, and 7%.

- The time histories shall meet the criteria of Section 2.3 of ASCE 4 (Ref. 4.3.6) and Section 3.7.1 of NUREG-0800 (Ref. 4.2.4) for the strong motion duration.

- A one-sided target power spectrum density function compatible to the DBE response spectrum shall be developed. The power spectral density functions (PSDFs) of the design acceleration-compatible time histories shall be computed and smoothed following the requirements of Section 3.7.1 of NUREG-0800 (Ref. 4.2.4). The PSDFs shall be compared with the target power spectrum to ensure target power spectrum matching requirements outlined in Section 3.7.1 of NUREG-0800 (Ref. 4.2.4) are satisfied. This requirement ensures adequacy of the power in the design time histories.

- The statistical independence among the three components of the time histories shall be checked to meet the recommendations of Section 2.3 of ASCE 4 (Ref. 4.3.6) and the NRC Regulatory Guide 1.92 (Ref. 4.2.1).

- The time histories shall be baseline-corrected and the velocity and displacement time histories shall be generated.

Computer program BSIMQKE (Ref. 4.4.17) shall be used to generate acceleration time histories. Computer program DATAN (Ref. 4.4.18) shall be used to compute power spectral density functions and other statistical parameters for time histories. The set of three orthogonal time histories developed based on the above requirements and recommendations shall define the DBE control motion in the free-field for the RPP-WTP Facility SC-I and SC-II structures with control point defined at the ground surface level.

7. Seismic Analysis

7.1. General

This Section details the seismic analysis criteria to be used to compute the seismic loads on the SSCs and generation of in-structure response spectra.

7.2. Seismic Analysis of SC-I and SC-II Structures, Systems and Components

Note: In this Section, references in the text to DOE-STD-1020-94 (Ref. 4.1.1) and ASCE 4 (Ref. 4.3.6) are abbreviated as "DOE-STD-1020" and "ASCE 4" respectively.

7.2.1. Seismic Analysis of SC-I and SC-II Structures

7.2.1.1. Method of Analysis

Since RPP-WTP Facility structures are located on a deep soil site, seismic soil-structure interaction (SSI) analysis shall be performed to obtain seismic responses for design of SSCs as recommended in Section C.4.3 of DOE-STD-1020. For SSI analysis, the computer program SASSI (Refs. 4.4.10 and 4.4.16) also recommended in Section C.4.3 of DOE-STD-1020 shall be used.

SASSI (A System for Analysis of Soil-Structure Interaction) is an elastic linear finite element sub-structuring program that can solve two- and three- dimensional SSI problems with embedded flexible foundations. The program is formulated in frequency domain using the complex response method. Conversions between the time domain and the frequency domain are performed by Fast Fourier Transform technique. SASSI is an industry practice program for dynamic SSI analysis of critical structures.

Since SASSI is a linear program, soil nonlinearity is considered using the equivalent linear method and the computer program SHAKE (Ref. 4.4.11). The program SHAKE computes the responses of a system of horizontal soil layers resting on an elastic halfspace subjected to vertically propagating waves. The program is based on the continuum solution of the wave equation. The nonlinearities in soil shear modulus and damping are taken into account by using the equivalent linear method to obtain strain-compatible shear modulus and damping values.

7.2.1.2. Input Motion

The acceleration time histories defined in Section 6.3 shall be used as input motion both in the free-field SHAKE analyses and in the SASSI SSI analyses. Since the design response spectra include soil amplification effects (per the Geomatrix Consultants Report, Ref. 4.4.22), the control point for the time histories shall be set at the ground surface level in the free-field. The wave field shall consist of vertically propagating shear and compressional waves. Variation of amplitude and frequency content with depth in the free-field motion shall be considered in the analysis as recommended in Section C.4.3 of DOE-STD-1020 and in Section 3.3 of ASCE 4. The two standards also permit using the vertically propagating waves only if torsional effects due to nonvertically propagating waves are considered in the design. Both ASCE 4 and DOE-STD-1020 consider the accidental eccentricity as discussed in Section 7.2.8 to fully account for the possible effects of nonvertically propagating waves.

7.2.1.3. Dynamic Soil Properties

Dynamic soil properties in terms of maximum shear and compressional wave velocities, Poisson's ratio, and total density shall be obtained from site specific geotechnical investigation (Ref. 4.4.9). The site-specific low-strain shear wave velocity shall be used in the free-field SHAKE analysis to obtain strain-compatible soil properties. The strain-compatible soil properties shall be used in the subsequent SSI analyses. To take into account the soil nonlinear effects, strain-dependent soil properties shall be used in the SHAKE analysis. Depending on the soil type and in accordance with the recommendations in Section C.4.3 of DOE-STD-1020, the strain-dependent soil properties from published reports by Seed et

al. (Ref. 4.4.12) and Sun et al. (Ref. 4.4.13) shall be used. In addition, applicability of the more recent published data on strain-dependent soil properties such as the paper by Idriss (Ref. 4.4.14) and the generic curves published by EPRI (Ref. 4.4.15) shall be evaluated and considered for RPP-WTP application.

To account for the uncertainties and scatter in the dynamic soil properties, the best estimate low-strain shear modulus of the soil layers (G_{max}) at the site shall be obtained using the field geophysical investigation data (Ref. 4.4.9). As recommended in Section C.4.3 of DOE-STD-1020 and Section 3.3.1.7 of ASCE 4, the low strain shear modulus shall be varied between $(1 + C_v)*G_{max}$ and $G_{max} / (1 + C_v)$, where, C_v is a factor to account for uncertainties in soil properties and in the SSI analysis. If sufficient data are available, the mean and standard deviation of the low strain shear modulus shall be established for every soil layer. C_v shall be established so that it will cover the mean plus or minus one standard deviation for every layer. The minimum value of C_v shall be 0.50. If sufficient data is not available, the minimum value of C_v shall be 1.0.

For saturated soil layers, the presence of water shall be considered in selecting the Young's modulus and the Poisson's ratio for the soil layers.

Available geotechnical data from the nearby sites indicate deep water table and presence of dense to very dense granular material. For these reasons, there does not appear to be any potential for liquefaction and dynamic settlement. This will be confirmed by the RPP-WTP geotechnical investigation report (Ref. 4.4.9), when completed.

7.2.1.4. SSI Foundation Model

The foundations of the RPP-WTP Facility structures shall be modeled per the modeling criteria of SASSI, which include modeling the basement structure and the excavated soil. The soil layers shall be modeled using the strain-compatible soil properties obtained from free-field SHAKE analysis. To include the embedment effects, the basemat and the exterior embedded walls of the structures shall be modeled and the overall dimensions of the basement will be maintained in the SSI model. As recommended in Section 3.3.1.6 of ASCE 4, the foundation model shall consider the effect of basemat and the lateral wall flexibility.

7.2.1.5. Seismic Models of the Structures

The seismic models of the structures shall be constructed from the 3-D finite element models of the structures developed for the structural analyses using GT STRUDL computer program (Ref. 4.4.21). Each 3-D finite element model represents the entire structure, including basemat, walls, roof and floor slabs, structural steel framing and major penetrations and openings in the walls and slabs. The basemat, walls, floor slabs and roof slabs are represented by quadrilateral plate elements. Structural steel is represented by linear members.

Based on the size and refinement of the 3-D finite element model, either the finite element model or an equivalent lumped mass beam stick model shall be used in the SASSI analysis.

If the 3-D finite element model is used directly, the stiffness shall be represented by the stiffness of the individual elements. Since the mass will be distributed at the nodal points, the center of mass will be properly considered in the analysis. Fixed base modal properties and mode shapes of the model shall be obtained to characterize the dynamic behavior of the structure.

To develop an equivalent beam stick model, the beam sectional properties and mass points shall be developed. The mass centers and the centers of stiffness for each section shall be computed so that the beam stick model maintains the three-dimensional dynamic properties of the structure. The dynamic properties of the equivalent beam stick model in terms of the major fixed-base modal properties (natural frequencies and mode shapes) shall be computed. These properties shall be compared with the respective properties computed from the finite element model to ensure adequacy of the beam stick model. At locations where the vertical response of structural slabs are required (generating input motion for subsystems), a single degree-of-freedom system shall be attached to the beam stick model at appropriate elevation to include the vertical frequency of the slab.

The seismic mass shall consist of full dead load and 25% of live load. The dead load shall include the weight of structure, partitions, permanent equipment, piping, raceways, HVAC ductwork and other permanent static loads.

Structural properties in terms of the elastic Young's modulus and Poisson's ratio shall be obtained from the relationships recommended in Section 3.1.2.1 of ASCE 4.

The damping values shall be per Table 2-3 of DOE-STD-1020 and are reproduced below.

Structure	Damping (% of critical)	
	Response Level 1	Response Level 2
Reinforced concrete structures	4	7
Bearing-bolted steel structures	4	7
Friction-bolted steel structures	2	4
Welded steel structures	2	4

Response Level 2 damping values shall be used for computing seismic loads. Response Level 1 values shall be used for developing in-structure response spectra and input motions for subsystems.

In lieu of two seismic analyses of the structure, one with Response Level 1 damping values and the other with Response Level 2 damping values as described above, a single analysis using only the Response Level 1 damping values shall be considered to reduce the analysis cost, if it can be shown by parametric study that use of the lower Response Level 1 damping will have insignificant effect on seismic loads.

Since 15 % peak broadening will be performed for in-structure responses (see Section 7.2.1.8), no variation of structural properties is warranted as recommended in Section 3.1.3.1 of ASCE 4.

7.2.1.6. Subsystems Dynamic Coupling Criteria and Hydrodynamic Mass Effects

The coupling criteria described in Section 3.1.7 of ASCE 4 shall be used to identify the level of coupling between the subsystems and the primary system in the structural model. It is anticipated that only the total inertia of the subsystems may need to be included in the primary model. The in-structure responses shall be used for detail analysis and design of subsystems. In the event that subsystems need to be modeled as part of primary model, the recommendations of Section 3.1.7 of ASCE 4 shall be used to model the subsystems.

7.2.1.7. SSI Analysis Cases

The foundation model and the seismic model of the structure are combined to form the SSI model. SSI analyses of each structure shall include:

- The layering effects of the supporting soil layers and the radiation damping associated with soil-foundation interaction
- SSI analysis with best estimate, upper bound, and lower bound soil property profiles
- Flexibility of the basemat and embedded walls of the structure
- Monitoring the soil pressure behind the embedded walls of the structure. Parametric studies shall be performed to include the effect of soil-wall separation up to a depth that seismic soil pressure exceeds the in-situ static stress on the walls.
- Effect of concrete cracking depending on the stress level in the structural elements
- Structure-to-structure interaction analysis, if warranted, based on the proximity of the structures. To perform the structure-to-structure interaction analysis, SSI models of the affected structures shall be combined and analyzed.

7.2.1.8. SSI Structural Responses

- Structural response in terms of seismic shear and moments in all three directions (two horizontal and one vertical direction) shall be obtained from SSI analyses of the structures. The total response shall be obtained by combining the three co-directional responses by the "Component Factor Method (1/0.4/0.4)" illustrated by equation (3200-28) of ASCE 4. The results of applicable cases, such as, the best estimate, lower bound and the upper bound soil properties shall be enveloped.
- To account for accidental eccentricity, recommendation in Section 3.3.1.2 of ASCE 4 and Section 3.7.2 of NUREG-0800 (Ref.4.2.5) shall be followed. The additional torsional moment shall be computed from the story shear at the elevation and direction of interest times a moment arm equal to 5% of the building plan dimension perpendicular to the direction of motion in the analysis. The additional torsional moment shall be added to the torsional moment obtained directly from the SSI analysis.
- In-structure acceleration response spectra shall be computed at applicable damping ratios at the locations of the subsystems. The Square Root of the Sum of the Squares (SRSS) method shall be used to combine the spectral amplitudes of co-directional responses. The results of applicable cases, such as, the best estimate, lower bound and the upper bound soil properties shall be enveloped. Recommendations of Section 3.4.2.2 of ASCE 4 shall be used in selecting the frequency points for calculating the in-structure responses. A peak broadening of ±15% shall be used in accordance with the recommendations of Section 3.4.2.3 of ASCE 4. The enveloping acceleration response spectra shall be constructed in accordance with the requirements of NRC RG 1.122 (Ref. 4.2.2).
- Lateral seismic soil pressures shall be obtained from the SSI analyses. The results of applicable soil cases shall be enveloped to obtain the maximum design seismic lateral soil pressure.

7.2.2. Seismic analysis of SC-I and SC-II Systems and Components

7.2.2.1. Analysis Methods

One of the following analysis methods shall be used based on the characteristics and complexities of the system and component:

- Dynamic analysis
- Equivalent static analysis

In lieu of analysis, an equipment may be seismically qualified by testing as described in Section 7.2.2.5.

7.2.2.2. Dynamic Analysis

7.2.2.2.1. Methods

The dynamic analysis shall be accomplished using the response spectrum, frequency domain or time-history approach. Time-history analysis shall be performed using either the direct integration method or the modal superposition method.

7.2.2.2.2. Modeling

a) Equipment

Unless a more complex model, e.g., a finite element model, is required, the equipment shall be represented by a lumped-mass system consisting of discrete masses connected by weightless springs. The criteria used to lump masses shall be as follows:

(i) The number of masses is chosen so that all significant modes are included. The modes are considered as significant if the corresponding natural frequencies are less than 33 Hz and the stresses calculated from these modes are greater than 10% of the total stresses obtained from lower modes. This approach is acceptable provided at least 90% of the loading/inertia is contained in the modes used. Alternately, the number of degrees of freedom are taken more than twice the number of modes with frequencies less than 33 Hz.

(ii) Mass is lumped at the following points:

- Where a significant concentrated weight is located (e.g., the motor in the analysis of pump motor stand, the impeller in the analysis of pump shaft, etc).
- Where there is a significant change in either the geometry or stiffness

(iii) If the fundamental frequency of an equipment is equal to or greater than 33 hz, it shall be considered as seismically rigid and analyzed accordingly.

b) Piping

The piping system shall be modeled as an assemblage of pipe elements supported by hangers, guides, anchors, struts and snubbers. Pipe and hydrodynamic masses shall be lumped at the

nodes and connected by weightless elastic beam elements which reflect the physical properties of the corresponding piping segment. The node points shall be selected to coincide with the locations of large masses, such as valves, pumps and motors, and with locations of significant geometry change. All pipe-mounted equipment, such as valves, pumps and motors, shall be modeled with lumped masses connected by elastic beam elements which reflect the physical properties of the pipe-mounted equipment. The torsional effects of valve operators and other pipe-mounted equipment with offset centers of gravity with respect to the piping center line shall be included in the model. On straight runs, mass points shall be located at spacings no greater than the span which would have a fundamental frequency equal to 33 Hz, when calculated as a simply supported beam with uniformly distributed mass.

Snubbers shall be modeled with an equivalent stiffness which is based on dynamic tests performed on prototype snubber assemblies or on data provided by the vendor. Struts shall be modeled with a stiffness calculated based on their length and cross-sectional properties. The stiffness of the supporting structure for snubbers and struts shall be included in the piping analysis model, unless the supporting structure can be considered rigid relative to the piping. The supporting structure can be considered as rigid relative to the piping if its stiffness is at least 200 times that of piping.

Anchors at equipment such as tanks, pumps and heat exchangers shall be modeled with calculated stiffness properties. Mass effects shall be included for equipment which have a fundamental frequency less than 33 Hz. A simplified model of the equipment shall be included in the piping system model.

c) Distributive Systems

Distributive systems, such as, cable trays and HVAC ducts shall be modeled similar to piping systems.

7.2.2.2.3. Damping

The damping values shall be the Response Level 1 values of Table 2-3 of DOE-STD-1020 (except where noted) and are reproduced below.

System/Component	Damping (% of critical)	Remarks
Piping systems	Per Figure 4	Per ASME Code Case N-411
Electrical cabinets and other equipment	3	
Cable trays up to half-full	3	
Cable trays more than half-full	10	
HVAC ductwork	3	
Light-welded instrument racks	2	
Massive, low-stressed components (pumps, motors, etc.)	2	
Liquid-containing metal tanks (impulsive mode)	2	
Liquid-containing metal tanks (sloshing mode)	0.5	

See Section 10.7.2.2.2.3 for commentary.

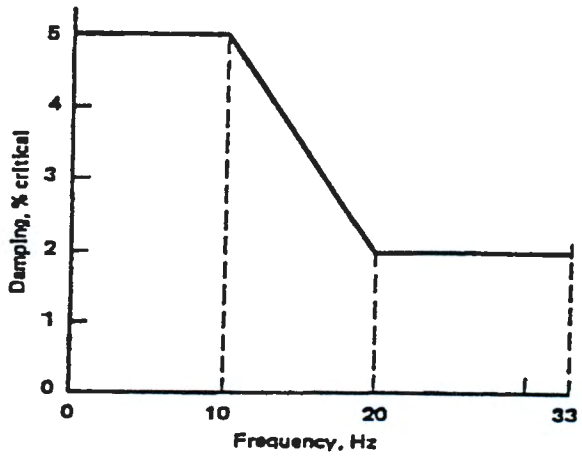

Figure 4. Damping Values for Response Spectra Analysis of Piping

Note: This figure is a reproduction of Figure 1 of ASME Code Case N-411 (Ref. 4.3.7)

7.2.2.3. Equivalent Static Analysis

Equivalent static analysis method may be used in lieu of a dynamic analysis if the system or component can be realistically represented by a simple model. A static analysis shall be performed by applying equivalent static forces at the mass locations in two principal horizontal directions and the vertical direction. The equivalent static force at a mass location shall be computed as the product of the mass and the seismic acceleration value applicable to that mass location. The seismic acceleration values shall be as follows:

(a) Single Mode Dominant Response

The acceleration value from the applicable in-structure response spectrum shall be used. In lieu of calculating the natural frequency, the peak value of the in-structure response spectrum acceleration may be used conservatively.

(b) Multiple Mode Dominant Response

1.5 times the peak acceleration value of the applicable in-structure response spectrum shall be used.

7.2.2.4. Total Seismic Response

The total seismic response shall be computed by combining the responses from the two horizontal and the vertical analysis by either the SRSS method, or the Component Factor method (1/0.4/0.4).

7.2.2.5. Seismic Qualification of Equipment by Testing

Testing procedures presented in IEEE Std 344 (Ref. 4.3.10) shall be followed. The actual mounting of the equipment shall either be simulated or duplicated. All normal loads acting on the equipment shall be simulated. The seismic load shall be defined by the Required Response Spectrum (RRS) obtained by enveloping and smoothing (filling in valleys) the in-structure spectra computed at the supports of the equipment by linear elastic analyses, and multiplied by a factor of 1.4. The Test Response Spectrum (TRS) of the shake table shall envelop the RRS.

7.2.2.6. Recommended Frequencies

The fundamental frequencies of equipment and components shall preferably be less than one-half or more than twice the dominant frequencies of the support structure, to avoid resonance.

7.2.2.7. Tanks

For the seismic analysis of tanks, the recommendation of BNL 52361 (Ref. 4.1.3) shall be followed.

7.2.2.8. Buried Pipes

For the analysis of buried waste transfer pipes, the recommendations of Section 3.5.2 of ASCE 4 shall be followed. Forces on straight segments and segments at bends and anchor points shall be determined.

7.2.2.9. Multiply-Supported Systems and Components

The inertial response shall be calculated using an upper bound envelope of individual response spectra for the support locations. The relative seismic support displacement, i.e., seismic anchor motion, shall be computed per the recommendations of Section 2.4.1 of DOE-STD-1020. The response from the relative seismic support displacement analysis shall be combined with the response from the inertial loads by the SRSS method.

In lieu of the response spectrum approach, time histories of the support motions may be used.

7.3. Seismic Analysis of SC-III and SC-IV Structures, Systems and Components

7.3.1. General

Earthquake loads on SC-III and SC-IV SSCs shall be calculated per UBC (Ref. 4.3.9) using the following static force procedures. The quoted section and formula numbers are from UBC. It should be noted that the UBC formulas express the earthquake loads in terms of "strength level". The dynamic lateral force procedure of Section 1631 shall be used for structures that do not meet the requirements of Section 1629.8.3.

7.3.2. Seismic Analysis of SC-III and SC-IV Building Structures

(a) It should be ensured that the structures meet the requirements of Section 1629.8.3.

(b) Earthquake load, E, shall be calculated per Formula (30-1), i.e.,

$$E = \rho E_h + E_v$$

E_h, the horizontal component of E, is the earthquake load due to the base shear, V, which shall be calculated per Section 1630.2.1, i.e.,

$$\frac{2.5\,C_a\,I\,W}{R} \geq V = \frac{C_v\,IW}{R\,T} \geq 0.11\,C_a\,I\,W$$

W, the seismic dead load, shall be as defined in Section 1630.1.1.

I, the Importance Factor shall be taken as 1.25 for SC-III structures and 1.00 for SC-IV structures

C_a and C_v, the seismic coefficients shall be as recommended in the RPP-WTP Geotechnical Investigation Report (Ref. 4.4.9).

R shall be as set forth in Table 16-N.

T, the structure period shall be determined per Section 1630.2.2.

ρ, the Reliability/Redundancy Factor, shall be calculated per Section 1630.1.1. ρ shall not be less than 1.0 and need not be greater than 1.5.

E_v, the vertical component of E, shall be equal to $0.5C_aID$, for Strength Design, and may be taken as zero for Allowable Stress Design. D represents the dead load of the structure.

See Section 10.7.3.2.b for commentary.

(c) Horizontal Torsional Moments: Increased shears resulting from horizontal torsion, where diaphragms are not flexible, shall be calculated per Section 1630.7. The flexibility of the diaphragms shall be determined per Section 1630.6.

(d) Vertical Distribution of Force: The base shear, V, shall be distributed over the height of the structure per the requirements of Section 1630.5.

(e) Horizontal Distribution of Shear: The distribution of story shears to the various elements of the vertical lateral-force-resisting system shall be per the requirements of Section 1630.6.

(f) Overturning Moments: The overturning moments caused by the forces described in (d) shall be computed per Section 1630.8. The overturning moments shall be distributed to the resisting elements in the manner prescribed in Section 1630.6.

(g) Diaphragms: Design seismic forces on diaphragms shall be calculated per Section 1633.2.9.

(h) Collector Elements: Design seismic forces on collector elements shall be calculated per Section 1633.2.6.

(i) Orthogonal Effects: Effects of earthquake forces acting in a direction other than the principal axes shall be considered as described in Section 1633.1.

(j) PΔ Effects: PΔ effects shall be considered as described in Section 1630.1.3.

(k) Increase in lateral earth pressure due to earthquake loading shall be calculated per the recommendations of the RPP-WTP Geotechnical Investigation Report (Ref. 4.4.9).

7.3.3. Seismic Analysis of SC-III and SC-IV Nonbuilding Structures

(a) Nonbuilding structures shall include all self-supporting structures other than buildings that carry gravity loads and resist the effects of earthquakes.

(b) Lateral earthquake forces on nonbuilding structures with structural systems similar to buildings, i.e., those with structural systems listed in Table 16-N, shall be calculated per Section 1630.2.1.

(c) The weight W shall include all dead loads defined in Section 1630.1.1 plus all normal operating contents for items such as tanks, vessels, bins and piping.

(d) The fundamental period of the structure shall be determined by rational methods, such as, Method B in Section 1630.2.2.

(e) Rigid structures, i.e., structures with period less than 0.06 second, and their anchorage shall be designed for the lateral force determined per Section 1634.3.

(f) Flat bottom tanks and tanks with supported bottoms, founded at or below grade, shall be designed to resist the seismic forces calculated per Section 1634.4.

(g) Seismic forces on nonbuilding structures not covered above shall be calculated per Section 1634.5.

7.3.4. Seismic Analysis of SC-III and SC-IV Systems and Components

(a) The lateral seismic force on systems and components, F_p, shall be calculated per Formula (32-1), i.e.,

$$F_p = 4.0\ C_a\ Ip\ W_p$$

W_p is the weight of the system or component

C_a, the seismic coefficient, shall be as recommended in the RPP-WTP Geotechnical Investigation Report (Ref. 4.4.9).

I_p, the Importance Factor, shall be taken as 1.50 for SC-III systems and components and 1.00 for SC-IV systems and components.

(b) F_p shall be distributed in proportion to the mass distribution of the system and component.

(c) Where an approved national standard or approved physical test data provide a basis for the earthquake-resistant design of a system or component, such a standard or data shall be acceptable with the limitations specified in Section 1632.5.

(d) For multiply-supported SC-III systems and components, relative seismic support displacement shall be considered using the value of story drift, Δ_M, discussed in Section 8.6.2.(a). The response from the relative seismic support displacement analysis shall be combined with the response from the inertial loads by the SRSS method.

See Section 10.7.3.4 for commentary.

7.3.5. Interaction of SC-III/SC-IV Systems and Components with SC-I/SC-II Systems and Components

To avoid interaction, SC-III/SC-IV systems and components shall be isolated from SC-I/SC-II systems and components. If it is not feasible or practical to isolate them, the adjacent SC-III/SC-IV systems and components shall be analyzed according to the same criteria as applicable to the SCI/SC-II systems and components. For SC-III/SC-IV systems attached to SC-I/SC-II systems, the dynamic effects of SC-III/SC-IV systems shall be simulated in the modeling of SC-I/SC-II systems. The attached SC-III/SC-IV system, up to the first anchor beyond the interface, shall also be designed in such a manner that it will not cause a failure of the SC-I/SC-II system due to the DBE.

8. Seismic Design

8.1. General

This Section details the criteria to be used for the design of structures for seismic loads. It also covers criteria for the design of anchorage, evaluation of stability of structures against sliding and overturning, story drift, building separation, and detailing of structures to ensure ductile behavior.

8.2. Design Methods

Reinforced concrete shall be designed by the Strength Design method. Design of SC-I and SC-II structures shall be governed by the provisions of ACI 349 (Ref. 4.3.2). Design of SC-III and SC-IV structures shall be governed by the provisions of ACI 318 (Ref. 4.3.1).

Structural steel shall be designed by the Allowable Stress Design method. Design of SC-I and SC-II structures shall be governed by the provisions of ANSI/AISC N690 (Ref. 4.3.5). Design of SC-III and SC-IV structures shall be governed by the provisions of AISC M016 (Ref. 4.3.4).

Masonry shall be designed by the Allowable Stress Design method. The design of SC-III and SC-IV structures shall be governed by the provisions of ACI 530 (Ref. 4.3.3). Masonry is not used in SC-I and SC-II structures.

See Sections 10.8.2 for commentary.

8.3. Load Combinations and Structural Acceptance Criteria

Only load combinations involving earthquake loads are discussed here.

8.3.1. Notations

D = Dead load
L = Live load, except roof live load
L_r = Roof live load
S_N = Snow load
E = Earthquake load
F = Load due to weight and pressures of fluid
H = Lateral earth pressure
R_o = Pipe reactions during normal operating conditions
T_o = Thermal loads during normal operating conditions
S = Allowable stress per Allowable Stress Design method
U = Required strength per Strength Design method

8.3.2. General Notes on the Load Combinations

(a) Where the structural effects of differential settlement, creep, or shrinkage may be significant, they shall be included with the dead load D in all the load combinations. Estimation of these effects shall be based on a realistic assessment of such effects occurring in service.

(b) Where any load reduces the effect of other loads, the corresponding coefficient for that load shall be taken as 0.9 if it can be demonstrated that the load is always present or occurs simultaneously with the other loads. Otherwise, the coefficient for that load shall be taken as zero.

(c) All load combinations shall be checked for zero live load condition.

8.3.3. SC-I Structures

(a) Reinforced Concrete

The following load combinations are based on Section 9.2 of ACI 349 (Ref. 4.3.2).

$U = D+L+L_r+F+H+T_o+R_o+E$
$U = D+L+S_N+F+H+T_o+R_o+E$

(b) Structural steel

The following load combinations are based on Table Q.1.5.7.1 of ANSI/AISC N690 (Ref. 4.3.5), as modified by Appendix F of Section 3.8.4 of NUREG-0800 (Ref. 4.2.6).

$1.6\ S = D+L+L_r+R_o+T_o+E$	except for compression in members and shear in members and bolted connections
$1.6\ S = D+L+S_N+R_o+T_o+E$	except for compression in members and shear in members and bolted connections
$1.4\ S = D+L+L_r+R_o+T_o+E$	For compression in members and shear in members and bolted connections
$1.4\ S = D+L+S_N+R_o+T_o+E$	For compression in members and shear in members and bolted connections

8.3.4. SC-II Structures

In the following equations, F_μ is the inelastic energy absorption factor from Table 2-4 of DOE-STD-1020-94 (Ref. 4.3.1).

(a) Reinforced Concrete

The following load combination are based on Section 9.2 of ACI 349 (Ref. 4.3.2).

$U = D+L+L_r+F+H+T_o+R_o+E/F_\mu$
$U = D+L+S_N+F+H+T_o+R_o+E/F_\mu$

(b) Structural steel

The following load combinations are based on Table Q.1.5.7.1 of ANSI/AISC N690 (Ref. 4.3.5), as modified by Appendix F of Section 3.8.4 of NUREG-0800 (Ref. 4.2.6).

$1.6\ S = D+L+L_r+R_o+T_o+E/F_\mu$	Except for compression in members and shear in members and bolted connections
$1.6\ S = D+L+S_N+R_o+T_o+E/F_\mu$	Except for compression in members and shear in members and bolted connections
$1.4\ S = D+L+L_r+R_o+T_o+E/F_\mu$	For compression in members and shear in members and bolted connections
$1.4\ S = D+L+S_N+R_o+T_o+E/F_\mu$	For compression in members and shear in members and bolted connections

8.3.5. SC-III and SC-IV Structures

The following load combinations are based on UBC (Ref. 4.3.9) Sections 1612.2.1 (for reinforced concrete) and 1612.3.2 (for structural steel and masonry).

(a) Reinforced Concrete

$U = 1.1\ (1.2D+L+0.2S_N+1.3F+1.6H+1.2T_o+E)$
$U = 1.1\ (0.9D \pm E)$

(b) Structural steel, Masonry and Foundation bearing capacity

$1.33\ S = D + L + E / 1.4$

$1.33\ S = D + L + S_N + E / 1.4$

$1.33\ S = 0.9\ D \pm E / 1.4$

8.4. Stability Requirements for Building Structures

The following minimum factors of safety shall be provided against sliding and overturning due to earthquake loads.

8.4.1. SC-I and SC-II Building Structures

The following factors of safety are based on Section 3.8.5 of NUREG-0800 (Ref. 4.2.7) requirements.

Load Combination	Sliding	Overturning
D + H + E	1.1	1.1

Stability against overturning due to seismic loads shall be evaluated by the "energy approach", i.e., the factor of safety against overturning shall be calculated as the ratio of potential energy required to cause overturning about one edge of the structure to the maximum kinetic energy in the structure due to the

earthquake. The procedure described in Section 4.4.2 of "Seismic Analysis of Structures and Equipment for Nuclear Power Plants" (Ref. 4.4.19) shall be followed for the evaluation.

8.4.2. SC-III and SC-IV Building Structures

The following factors of safety are based on UBC (Ref. 4.3.9) requirements.

Load Combination	Sliding	Overturning
D + H + E/1.4	1.5	1.5

8.5. Anchorage

8.5.1. Anchor Bolts and Concrete Expansion Anchors

(a) SC-I and SC-II SSCs

The design of anchor bolts and concrete expansion anchors shall be based on the "ductile design" philosophy of Appendix B of ACI 349 (Ref. 4.3.2).

(b) SC-III and SC-IV SSCs

The design of anchor bolts shall be per Section 1923 of UBC (Ref. 4.3.9).

The allowable design capacities of concrete expansion anchors shall be based on the manufacturers' recommendations, and shall include a minimum factor of safety of 4 on the mean ultimate capacity. The manufacturers' test data shall be current and shall be approved by the ICBO. Proportioning of the anchors subjected to combined shear and tension shall be similar to the service load design of cast-in-place anchor bolts described in Section 1923.1 of UBC (Ref. 4.3.9).

8.5.2. Anchorage of Walls

8.5.2.1. General

Concrete and masonry walls shall be anchored to floors/roofs that provide out-of-plane lateral support to the walls. The anchorage shall provide a positive direct connection between the wall and the floor/roof.

8.5.2.2. Anchorage of SC-I and SC-II Concrete Walls

The anchorage shall be designed for the lateral force computed as the product of the wall mass and peak acceleration value of the applicable in-structure response spectrum.

8.5.2.3. Anchorage of SC-III and SC-IV Concrete and Masonry Walls

The anchorage shall be capable of resisting the largest of the horizontal forces specified in Sections 1611.4, 1632 and 1633.2.8 of UBC (Ref. 4.3.9). Walls shall be designed to resist bending between anchors where the anchor spacing exceeds 4 feet. Required anchors in masonry walls of hollow units or cavity walls shall be embedded in a reinforced grouted structural element of the wall.

8.6. Story Drift

8.6.1. SC-I and SC-II Building Structures

The following requirements are based on the provisions of Section 2.3.2 of DOE-STD-1020-94 (Ref. 4.1.1).

(a) The story drift shall be calculated from a dynamic, elastic analysis.

(b) Calculated drift shall include translational as well as torsional deflections.

(c) Calculated story drift shall not exceed 0.01 times the story height for structures with contribution to distortion from both shear and flexure. For structures in which shear distortion is the primary contributor to drift, the calculated story drift shall not exceed 0.004 times the story height.

8.6.2. SC-III and SC-IV Building Structures

The following requirements are based on the provisions of the UBC (Ref. 4.3.9). The quoted section and formula numbers are from UBC.

(a) Story drift shall be computed using the maximum inelastic response displacement, Δ_M, given by Formula (30-17), i.e.,

$$\Delta_M = 0.7\ R\ \Delta_S$$

Δ_S is the total story drift due to the design seismic forces (strength level) and shall be calculated from a static, elastic analysis of the lateral force-resisting system subjected to the design base shear or determined from dynamic analysis. Calculated drift shall include translational as well as torsional deflections.

R shall be as set forth in Table 16-N.

(b) The design lateral forces used to determine the calculated drift may disregard the limitations of Formula (30-6) and may be based on the period determined from Formula (30-10) neglecting the 30 or 40 percent limitations of Section 1630.2.2, Item 2.

(c) Δ_M shall not exceed 0.025 times the story height for structures having a fundamental period of less than 0.7 second. For structures having a fundamental period of 0.7 second or greater, Δ_M shall not exceed 0.02 times the story height.

See Section 10.8.6.2 for commentary.

8.7. Building Separation

8.7.1. SC-I and SC-II Structures

The following requirement is based on the recommendation of Section 4.4.3 of "Seismic Analysis of Structures and Equipment for Nuclear Power Plants" (Ref. 4.4.18).

A minimum separation of Δ_E, calculated as follows, between adjacent SC-I/SC-II structures shall be provided.

$$\Delta_E = 1.2\ (\Delta_{E1} + \Delta_{E2})$$

Δ_{E1} and Δ_{E2} are the maximum elastic (for SC-I structures)/inelastic (for SC-II structures) response displacements of the adjacent structures along the same axis.

8.7.2. SC-III and SC-IV Structures

Adjacent SC-III and SC-IV structures shall be separated by a distance of Δ_{MT}, the minimum value of which is given by Formula (33-2) of UBC (Ref. 4.3.9), i.e.,

$$\Delta_{MT} = \sqrt{(\Delta_{M1})^2 + (\Delta_{M2})^2}$$

Δ_{M1} and Δ_{M2} are the maximum inelastic response displacements of the adjacent structures along the same axis, calculated per Formula (30-17) of UBC (Ref. 4.3.9).

8.7.3. Interaction of SC-III/SC-IV Structures with SC-I/SC-II Structures

The following requirements are based on the recommendations of Section 3.7.2 of NUREG-0800 (Ref. 4.2.5).

The design of a SC-III/SC-IV structure adjacent to a SC-I/SC-II structure. shall meet one of the following requirements:

(a) The collapse of the SC-III/SC-IV structure will not cause it to strike a SC-I/SC-II structure, system or component.

(b) The collapse of the SC-III/SC-IV structure will not impair the integrity of a SC-I/SC-II structure, system or component.

(c) The SC-III/SC-IV structure will be analyzed and designed to prevent its failure under the DBE.

8.8. Seismic Proportioning and Detailing

8.8.1. General

Seismic proportioning and detailing requirements shall be per UBC (Ref. 4.3.9) as follows.

- Reinforced Concrete: Section 1921 of UBC
- Structural Steel : Division V of Chapter 22 of UBC
- Masonry: Section 2106.1.12 of UBC

UBC Seismic Zone 3 and 4 provisions shall be followed for SC-I and SC-II structures. For SC-III and SC-IV structures, requirements of UBC Seismic Zone 2 structures shall be met. It should be noted that these requirements are in addition to the general design requirements contained in the industry codes and standards listed in Section 4.3.

All the quoted sections are from UBC.

See section 10.8.8.1 for commentary.

8.8.2. Requirements for Reinforced Concrete

8.8.2.1. General Requirements

The following requirements shall be applied to all structures, unless noted otherwise.

(a) SC-I and SC-II structures only: Compressive strength, f'_c, of concrete shall not be less than 3,000 psi (Ref. Section 1921.2.4.1).

(b) SC-I and SC-II structures only: Reinforcement resisting earthquake-induced flexural and axial forces in frame members shall comply with ASTM A 706 (Ref. Section 1921.2.5.1). Reinforcement complying with ASTM A615 shall be permitted only when the upper strength limits given in Section 1921.2.5.2 are satisfied.

(c) Welded splices and mechanical connection splices shall meet the requirements of Section 1921.2.6. Welding of reinforcing steel shall conform with the requirements of AWS D1.4 (Ref. 4.3.8) except as provided in ACI 318 (Ref. 4.3.1) and ACI 349 (Ref. 4.3.2).

8.8.2.2. Shear Walls, Diaphragms and Trusses

(a) Requirements of Section 1921.6 shall apply to SC-I and SC-II structures.

(b) There are no special requirements for SC-III and SC-IV structures.

8.8.2.3. Frames

(a) SC-I and SC-II structures

(i) Frames resisting earthquake forces shall be special moment-resisting frames (SMRF). Their properties and detailing shall be governed by the provisions of Sections 1921.3 through 1921.5.

(ii) Frames not resisting earthquake forces shall satisfy the requirements of Section 1921.7.

(b) SC-III and SC-IV structures

(i) Frames resisting earthquake forces shall, as a minimum, be intermediate moment-resisting frames (IMRF). Their properties and detailing shall be governed by the provisions of Section 1921.8.

(ii) Frames not resisting earthquake forces shall satisfy the requirements of Section 1921.7.

8.8.3. Requirements for Structural Steel

Requirement	Applicable UBC Section	
	SC-I & SC-II Structures	SC-III & SC-IV Structures
Definitions	2213.2	2213.2
Material specification	2213.4.1	2213.4.1
Member strength	2213.4.2	2213.4.2
Column	2213.5	No special requirement
Ordinary moment frame (OMF)	2213.6	2214.4
Special Moment-resisting frame (SMRF)	2213.7	2214.5
Braced frame	2213.8	2214.6
Special Concentrically-braced frame	2213.9	2213.9
Eccentrically braced frame (EBF)	2213.10	2213.10
Special truss moment frame	2213.11	2213.11
Nonbuilding structures	2213.9.6	2214.6.6
Nondestructive testing	2214.9 and 1703	2214.9 and 1703

8.8.4. Requirements for Masonry

Provisions of UBC Section 2106.1.12.3 shall be followed for masonry in SC-III and SC-IV structures.

9. Engineering Quality Assurance and Peer Review

9.1. Engineering Quality Assurance

The RPP-WTP Quality Assurance Program and Implementation Plan (Ref. 4.4.5) shall govern the seismic analysis and design of the RPP-WTP Facility. This Plan is in accordance with 10 CFR 830.120 (Ref. 4.4.20). Detailed provisions governing the design activities are included in Section 6.0 of the Plan. BNFL Code of Practice for Engineering Calculations (Ref. 4.4.7) shall be followed for preparation, checking, and approval of engineering calculations.

9.2. Peer Review

Seismic analysis and design of SC-I structures shall have an independent peer review. The review shall include these Criteria, analysis and design philosophy, lateral force resisting systems, and structural and seismic models of the structures. The review need not provide a detailed check but rather an overview to help identify oversights, errors, conceptual deficiencies, and other potential problems that may affect the performance of the structures during an earthquake.

The peer review shall be performed by qualified personnel not involved in the original design. The individuals may be from BNFL or Bechtel organizations.

The review shall be performed in accordance with the provisions of BNFL procedure K70P555, Design Verification (Ref. 4.4.8).

9.3. Use of Computer Programs

The computer program referenced in these Criteria have been verified and validated by Bechtel. The theoretical and user's manuals and program validation documentation are maintained by Bechtel in a controlled environment. If any of these programs are run on new platforms, they shall be revalidated and reverified per the provisions of BNFL procedure K70C515, Code of Practice for Computer Program Use (Ref. 4.4.6).

10. Commentary

These Criteria follow the requirements of DOE-STD-1020-94 (Ref. 4.1.1). Where exceptions are made, they are noted in the text and reference made to this Section for explanation. For convenience, the commentary section numbers are kept identical to the corresponding section numbers, with the prefix "10" added, e.g., section 10.7.3.2.b contains commentary on section 7.3.2.b.

10.5.a Absence of PC-4 SSCs at RPP-WTP Facility

A seismic probabilistic risk analysis (PRA) of the RPP-WTP Facility is proposed to be performed to demonstrate that the seismic design of the facility complies with the SRD (Ref. 4.4.4) radiation exposure standards for earthquakes beyond the DBE. The results of the seismic PRA will be used to determine strengthening of the facility, where required. This is expected to preclude designation of any RPP-WTP SSC as PC-4.

10.5.b Design of SC-I and SC-II Structures

PC-3 structure design requirements of DOE-STD-1020-94 (Ref. 4.1.1) will be followed for the design of Seismic Category I and II structures of the RPP-WTP Facility. Section 2.3.2 of DOE-STD-1020-94 allows reduction in the elastically computed seismic responses by the use of the inelastic energy absorption factor in the design of PC-3 structures. However, per the recommendation of subsection II of Section 3.7.2 of NUREG-0800 (Ref. 4.2.5), Seismic Category I structures are to be designed to remain elastic. Therefore, to satisfy both the DOE as well as the NRC recommendations, credit for inelastic energy absorption will not be taken in the design of Seismic Category I structures; however, credit for inelastic energy absorption will be considered in the design of Seismic Category II structures.

Seismic proportioning and detailing requirements of Section 8.8 to ensure ductile behavior are applicable to Seismic Category I as well Seismic Category II structures.

10.7.2.2.2.3 Damping Values for Seismic Analysis of Piping Systems

Damping values per Figure 4, which is a duplication of Figure 1 of ASME Code Case N-411 (Ref. 4.3.7), are proposed to be used. This has been acceptable to NRC for nuclear power plants.

10.7.3.2.b Seismic Analysis of SC-III and SC-IV Structures

Section 2.3.1 of DOE-STD-1020-94 (Ref. 4.1.1) specifies requirements for the seismic design of PC-1 (SC-IV) and PC-2 (SC-III) structures. These requirements are based on 1994 UBC. Since 1997 UBC (Ref. 4.3.9) is current, its requirements are followed in the design of the RPP-WTP Facility.

10.7.3.4 Seismic Analysis of SC-III and SC-IV Systems and Components

Section 2.4.1 of DOE-STD-1020-94 (Ref. 4.1.1) specifies requirements for the design of PC-1 (SC-IV) and PC-2 (SC-III) systems and components. These requirements are based on 1994 UBC. Since 1997 UBC (Ref. 4.3.9) is current, its requirements are followed in the design of the RPP-WTP Facility. The DOE Standard does not indicate the value of the importance factor, I_p, to be used. The I_p values are used from UBC table 16-K corresponding to the I values.

10.8.2 Design Methods

DOE-STD-1020-94 (Ref. 4.1.1) refers to Chapters 19 and 22 of UBC for design of reinforced concrete and steel structures respectively. The contents of Chapter 19 of the 1997 UBC (Ref. 4.3.9) are in general conformity with the provisions of ACI 318-95 (Ref. 4.3.1). Except for a few minor modifications, UBC has adopted AISC M016-89 (Ref. 4.3.4) for use in steel design. Therefore, there will not be any significant differences between the designs based on UBC and ACI/AISC codes. Since the ACI and AISC codes are national consensus codes, they have been preferred to UBC for the design of the RPP-WTP Facility.

The RPP-WTP Facility has major structures which process and store radioactive and hazardous materials. For design of these structures, it is considered appropriate to use ACI 349 (Ref. 4.3.2) and ANSI/AISC N690 (Ref. 4.3.5) for reinforced concrete and steel respectively, because these codes contain provisions for the design of nuclear facilities. Also, Section 3.8.4 of NUREG-0800 (Ref. 4.2.6) recommends use of ACI 349 and ANSI/AISC N690 for the design of Seismic Category I structures (other than the containment structure) of nuclear power plants.

As described in Section 5, the structures of the RPP-WTP Facility with seismic safety functions are to be categorized as either SC-I or SC-II. Therefore, their design will be governed by the provisions of ACI 349 (Ref. 4.3.2) and ANSI/AISC N690 (Ref. 4.3.5). The remaining structures of the RPP-WTP Facility are expected to be categorized as either SC-III or SC-IV, and their design will be governed by the provisions of ACI 318 (Ref. 4.3.1) and AISC M016 (Ref. 4.3.4).

10.8.6.2 Story Drift for SC-III and SC-IV Structures

The provisions of DOE-STD-1020-94 (Ref. 4.1.1) are based on 1994 UBC. The provisions of these Criteria are based on 1997 UBC (Ref. 4.3.9), since 1997 UBC is more current.

10.8.8.1 Seismic Proportioning and Detailing of SC-I and SC-II Structures

Though the RPP-WTP Facility site is located in Seismic Zone 2B (Ref. Section 3.1), the seismic proportioning and detailing requirements of Seismic Zone 3 and 4 are applied in the case of SC-I and SC-II structures. This is done to satisfy the requirements of Section 2.3.2 of DOE-STD-1020-94 (Ref. 4.1.1), according to which, Seismic Zone 3 and 4 provisions become applicable when the PGA for a PC-3 (SC-I/SC-II) facility is 0.25 g or more. The PGA corresponding to a SC-I/SC-II (PC-3) structure of the RPP-WTP Facility is 0.26 g.

Supplement 5

Supplement 5
Worked Example for Vessel V13024A

BNFL Inc.

Worked Example for Vessel V13024A

Contract deliverable number:	
Contract number:	DE-AC06-96RL13308
Department:	
Author(s):	R. A. La Pointe
Principal Author Signature	Robert LaPointe
Document Number:	RPT-W375PT-PR00014, Rev. 1
Checked by:	J. Su-Coker
Principal Checker Signature	
Date of issue:	28 April 2000
Issue status:	Approved
Approved by:	C. E. Corriveau
Approver's position:	Mechanical Lead Engineer

Approver's signature

BNFL Inc.
River Protection Project –
Waste Treatment Plant
3000 George Washington Way
Richland, WA 99352
United States of America
Tel: 509 371 3500
Fax: 509 371 3504

BNFL Inc.

Circulation List

Purpose of issue:
1 For comment
2 For action
3 For information

Name	Location	No of copies	Remarks	Purpose of issue

History Sheet

Rev	Date	Reason for revision	Revised by
0	30 March 2000	Approved	R. A. LaPointe
1	28 April 2000	Approved	R. A. LaPointe

Contents

Item	Page Number
Preface	vi
Acronyms and Abbreviations	vii
1. Introduction	1
1.1. Definitions	1
2. Design Philosophies	1
3. System Description	2
4. Vessel Function	2
5. Process Descriptions	3
6. Layout	3
7. Vessel System Operation	3
7.1. Liquid Mixing and Transfer System	3
7.2. Overflow Control System	4
7.2.1. Monitoring Instruments	4
7.2.2. Operational Interlocks	4
7.3. C5 Cell and Vessel Ventilation System	4
7.4. Containment System	5
7.5. Sampling System	6
8. Component Descriptions	7
8.1. Vessel V13024A	7
8.2. Piping Valves and Fittings	7
8.3. RFDs P13013A and B	8
8.4. Valves	8
8.5. Controls and Instrumentation	8
8.5.1. Vessels V13024A/B	8
8.5.2. Cesium Nitric Acid Recovery Cell Sump	8
8.6. Secondary Containment	9
9. Calculations	10
9.1. Vessel V13024A Design Conditions and Calculations	10
9.1.1. Software	10
9.1.2. Main Vessel Calculations	10
9.1.3. Charge Vessel Calculations	11
9.1.4. Fluidic Mixer Calculations	11
10. Operation	11

Contents

Item — Page Number

10.1. Primary Vessel Function 11

10.2. Spill Overflow Pathways 11

11. Waste Characteristics and Material Compatibility 12

11.1. Dangerous Characteristics of the Waste 12

11.2. Compatibility of Waste with Vessel V13024A and Cell Liner/Coating 12
11.2.1. Vessel V13024A 12
11.2.2. Coatings and Sealants 12

11.3. Corrosion Protection 13

12. Design Integrity Assessment 13

12.1. Work Schedule 13

References 14

Appendix 1 Basic Flow Diagram for the Cesium Nitric Acid Recovery System: PT System 320 ..... A1-i

Appendix 2 Simplified Process Flow Diagram for PT Systems 310 and 320 ..... A2-i

Appendix 3 Process Flow Diagram of Cesium Nitric Acid Recovery System: PT System 320 ..... A3-i

Appendix 4 Enlarged Plan View of Cesium Nitric Acid Recovery Cell A4-i

Appendix 5 Elevation of Lower Portion of Cesium Nitric Acid Recovery Cell A5-i

Appendix 6 Typical Cross Sections of Cell Wall-to-Floor Construction and Wall-to-Liner Details A6-i

Appendix 7 Liner Wall Height Calculations A7-i

Appendix 8 Process and Instrumentation Diagram of Cesium Nitric Acid Recovery Vessel V13024A A8-i

Appendix 9 Process and Instrumentation Diagram of Sump F15524 ..... A9-i

Appendix 10 Typical Cross Sections of Reverse Flow Diverter Nozzle A10-i

Appendix 11 Typical Reverse Flow Diverter System Arrangement and Generic Operating Instructions A11-i

Appendix 12 Pretreatment Plant Sump Design Options A12-i

Appendix 13 Preliminary Vessel V13024A Design Calculations A13-i

Appendix 14 Summary of Potentially Applicable Dangerous Waste Numbers A14-i

Appendix 15 Pre-construction Design Evaluation Report Outline A15-i

Preface

This Worked Example is intended to provide a comprehensive integrated demonstration of the engineering design methodology for the River Protection Project-Waste Treatment Plant (RPP-WTP) tank systems. The engineering information provided in this Worked Example is not typically generated in the engineering design process. Typically the engineering calculations to support design are not documented in the form presented in this Worked Example. The Worked Example is not intended to substitute for the engineering integrity assessment of the tanks systems as required by WAC 173-303-640(3)(a). That integrity assessment will be provided separately. Tank design aspects depicted in this Worked Example may be altered as the design progresses. Therefore, this document should only be considered an example of the comprehensive nature of the design process for RPP-WTP waste management systems. Future presentations of design information for tank systems will present in a different format and detail the information required to address the WAC 173-303-640 regulatory requirements. There is no intent to extend this Worked Example to encompass additional tank systems.

Acronyms and Abbreviations

ALARA	as low as reasonably achievable
ASME	American Society of Mechanical Engineers
DCS	distributed control system
DST	double-shell tank
Ecology	Washington State Department of Ecology
HEME	high-efficiency mist eliminator
HEPA	high-efficiency particulate air (filter)
HVAC	heating, ventilation, and air-conditioning
ISM	integrated safety management
LAW	low-activity waste
PJM	pulse jet mixer
RFD	reverse-flow diverter
RPP-WTP	River Protection Project – Waste Treatment Plant
WAC	*Washington Administrative Code*

1. Introduction

Several vessels and vessel systems will be in use at the River Protection Project – Waste Treatment Plant (RPP-WTP). To facilitate an understanding of a vessel system (i.e., vessel function, integrated design and operation), a worked example using a single vessel is provided.

For the purpose of the worked example, the cesium eluate receipt vessel (V13024A) was selected. The example includes information about: the room (cell) that houses the vessel, associated ancillary equipment, cell secondary containment, and cell and vessel ventilation.

The information in this report does address several major elements of Washington State Department of Ecology (Ecology) *Dangerous Waste Regulations*, Washington Administrative Code, WAC 173-303-640, *Tank systems*. In part, WAC 173-303-640 was used as a guideline for the development of this report as there are no applicable requirements for the RPP-WTP vessels in the *Washington Administrative Code* (WAC). For this report, vessels will be treated as tanks. The elements of WAC 173-303-640 are:

- Vessel structure: design codes and standards, vessel capacity calculations, structural calculations, and design seismic calculations
- Waste compatibility: material selection, waste types description, and corrosion protection measures
- Vessel system control: monitoring instruments, safety and operational interlocks, spill overflow pathways, and pressure and temperature monitoring systems, as required to demonstrate the plant-wide vessel system control philosophy
- Ancillary equipment: piping, fittings, valves, and pump designs
- Secondary containment: containment capacity calculations, material of construction, seismic calculations, and leak detection measures

1.1. Definitions

The following definitions apply to this worked example:

- Eluant: nitric acid solution used to remove the ions from the loaded resin
- Eluate: eluant exiting a cesium ion exchange column, containing the removed ions which were unloaded from the resin
- Elution: the process of using a nitric acid solution to remove ions from the resin

2. Design Philosophies

All equipment located within process cells will be designed to operate for the design life of the facility.

All in-cell operations will be performed remotely.

An important objective is to design in-cell vessels and associated equipment to be maintenance-free and replacement-free during the design life of the plant.

Corrosion protection is provided in the design primarily through the selection of the materials, and relies minimally on the use of coatings.

Heating, ventilation and air-conditioning (HVAC) systems are designed to ensure that air flow is inward, that is from out-cell, to in-cell, to vessel. This cascading concept is designed to draw air from areas with a relatively low level of potential radioactive contamination, through areas with an increasingly higher level of potential contamination. In this way, the potential for any backflow of radioactive or hazardous material from cell areas into an operating area will be greatly reduced.

C5 in-cell air will be removed using the C5 extraction system.

With few exceptions, piping systems will not contain external mechanical pumps, due to the susceptibility of the moving parts to failure. This practice reduces total amount of maintenance to be performed on contaminated pumps, in line with the ALARA (as low as reasonably achievable) philosophy embraced by RPP-WTP.

Automatic valves, which are maintainable, will be located out-cell. In-cell equipment is designed to be maintenance free.

Note: The design of this vessel system is still maturing and the design may continue to change through construction. Although some of the inputs are at different stages of development, every effort has been made to provide a coherent picture of the design.

3. System Description

SD-W375PT-PR0004, *System Description for Cesium Nitric Acid Recovery: PT320* provides insight into the process side of system design.

4. Vessel Function

A basic flow diagram of the cesium nitric acid recovery system is provided as Appendix 1.

The cesium eluate receipt vessel (V13024A) will be one of the two eluate receipt vessels in the cesium nitric acid recovery system (i.e., PT System 320). V13024A is designed to receive eluate from the cesium ion exchange columns (C13001 through C13004, and C13011). The vessel will store the eluate for analysis of nitric acid, nitrate salts and cesium-137 (^{137}Cs) concentrations, prior to sending the fluid for evaporation/concentration in the evaporator kettle (V13026).

Vessel V13024A will also be used to receive off-specification recovered acid for recycling through the cesium nitric acid recovery system, and may receive the discharge from ejectors used in emptying the evaporator kettle and the cesium concentrate vessel (V13073). The term "off-specification" refers to eluant that exceeds a pre-determined radioactivity level after having been processed through the nitric acid recovery portion of the process. An applicable portion of a simplified process flow diagram for PT System 320 and the cesium ion exchange system (PT System 310) is provided as Appendix 2. Appendix 3 presents the process flow diagram for the cesium nitric acid recovery system.

5. Process Descriptions

This vessel system will store the cesium eluate stream generated when the cesium ion exchange resin system is flushed with nitric acid to remove adsorbed ^{137}Cs thereby regenerating the resin. While in V13024A, the eluate will be sampled for cesium, nitrate salts and nitric acid content, prior to being sent to the evaporator kettle.

In the kettle, an evaporative process will be used to recover nitric acid and concentrate the eluate solution. The recovered nitric acid will be reused to elute the cesium ion exchange columns, while the recovered cesium concentrate will be transferred to storage vessel V13073, which will also collect recovered technetium concentrate from a separate ion exchange process.

Vessel V13024A and its sister vessel, V13024B, will be located upstream of the evaporator kettle. They will receive cesium eluate from the five cesium ion exchange columns, which will treat low-activity waste (LAW) in a loading mode process where ^{137}Cs ions are exchanged with sodium ions on the resin. When the ^{137}Cs concentration of the fluid exiting the lead ion exchange column contains 50% of the LAW feed ^{137}Cs concentration which entered that column (i.e. 50% breakthrough), a regeneration cycle will be initiated to remove the ^{137}Cs and regenerate the resin in the lead column. ^{137}Cs will be removed from the resin by elution using nitric acid. The eluate, containing ^{137}Cs, nitric acid, and nitrate salts, will be transferred from the cesium ion exchange columns to V13024A or B. This elution step will generate about 9,300 gallons of acidic fluid. A rinse, using 554 to 830 gallons of water, will immediately follow the elution step, and the rinse water will also be discharged into V13024A or B.

6. Layout

As shown in Appendix 4 (enlarged plan view of a cesium nitric acid recovery cell) and 5 (elevation of the lower portion of the cell), the skirt for Vessel V13024A will be located at the 0 foot elevation within the pretreatment building. The cesium ion exchange columns, which will be located above vessel V13024A in the same cell, are not shown in Appendix 5. The cell will be approximately 81.5 x 37.5 x 74 feet high.

The secondary containment sump will be located at the base of the north cell wall, halfway down the length of the wall (Appendices 4 and 5).

7. Vessel System Operation

7.1. Liquid Mixing and Transfer System

As described in Section 6, the five cesium ion exchange columns will be located above V13024A, which will facilitate the transfer of the cesium eluate and rinse water to V13024A. This vessel will also contain three pulse-jet mixers (PJMs), operated by process air, that will agitate the eluate to prevent stratification and ensure a homogenous sample mixture. Wash rings will also be installed within the vessel to wash down internal surfaces.

After the fluids in V13024A have been mixed and sampled, the mixture will be sent to the evaporator kettle using air-powered reverse-flow diverters (RFDs) (P13013A and P13013B).

7.2. Overflow Control System

7.2.1. Monitoring Instruments

Vessel V13024A level readout will be in the control room. The vessel will contain air reactive (bubbler) type level indicators and an alarm/trip system to monitor liquid levels, as follows:

- High-level alarm and trip (to trip off infeeds)
- Normal upper operating level
- Normal lower operating level
- Low-level alarm and trip (to trip off RFDs)

Sump level indication to detect a vessel or piping leak will be provided in the control room. Whether or not local indication is used will depend on the results of the integrated safety management (ISM) stage two process.

Information from the sump level indicator will be compared with information from the vessel level instruments to ascertain the magnitude of any leak. Typically, the sump level will be monitored using a bubbler-type level indicator and an alarm/trip system, as follows:

- Low operational control
- High operational control
- High-level alarm

During normal operation, the sump will contain a reference level of clean water. The water level will be maintained between the low and high operational control settings. Actions in response to a sump high-level alarm will be determined as a result of the ISM cycle, on a case-by-case basis.

7.2.2. Operational Interlocks

Two operational interlocks will be associated with V13024A. When the mixture level reaches the upper operating level or the high liquid level, eluant from the cesium ion exchange columns will be automatically routed to V13024B, and plant wash feeds to V13024A and B will be shut off. When the mixture level reaches the lower operating level, the mixture being transferred to the evaporator kettle will be discontinued by shutting off the V13024A RFDs (P13013A and B). The agitators will be turned off when the mixture level reaches the low liquid level.

Actions in response to a low-level condition will be determined later. In terms of current design, all the proposed actions (shutting off the agitators, plant wash, and vessel infeeds) will be initiated from the distributed control system (DCS).

A signal from the radiation monitor, which will monitor the activity of eluate exiting the columns undergoing elution, may preempt the upper operating level signal of the cesium eluate receipt vessel, to stop elution by shutting off the pump that is transferring eluant, and closing associated valves.

7.3. C5 Cell and Vessel Ventilation System

Air from the vessel and cell areas will be extracted and filtered using separate systems. Each extraction line will have a filtration system to remove radiological contamination. Each system will have primary and secondary filter banks with differential pressure instruments and high and low pressure alarms.

Radiation monitors, with high radiation alarms, will be provided between the primary and secondary filters to detect breakthrough of the primary filter. Discharges from the C5 cell and vessel ventilation systems will be monitored after filtration, before being routed to the atmosphere through the main discharge stack.

The vessel vent system, which will be comprised of two sub-systems, is designed to maintain negative pressure in V13024A/B as well as other tanks in the same cell. Exhaust air from the vessel will be routed to the gas treatment portion of the vessel vent system header, where it will undergo the following treatments:

- Nitrogen oxide compounds will be removed using a caustic scrubber.
- Radioactive aerosols and particulates will be removed using high-efficiency mist eliminators (HEMEs).
- Particulates will be removed using high-efficiency particulate air (HEPA) filters.
- Volatile organic compound vapors will be removed using organic absorbers.

The filters will be monitored for radiation, differential pressure and environmental discharge to the stack in the same manner as the C5 extraction system. Radiolytically-produced hydrogen inside V13024A will be controlled by introducing a regulated air in-bleed to the vessel headspace, using air drawn from a C3 area. The process vessel air inlets will be arranged on eight inlet headers, which will include a pair of HEPA filters, an isolation valve, a flow control valve and flow measurement. The HEPA filters will protect the C3 area in the unlikely event of backflow from the process vessel. This purge air will flow continuously into the vessel, maintaining the hydrogen concentration below 25% of lower flammability limit at all times. The vessel vent extraction fans will provide the motive force for the hydrogen control system, and will operate continuously. The fans will have emergency backup power, and the entire vessel vent flow-path will be seismically qualified.

The vessel vent system will also include a second header, separate from the process vessels, to handle exhaust air from fluidic devices, RFDs, and PJMs. This air stream will also be treated to remove radioactive aerosols and particulates using HEMEs and HEPA filters, before it passes through the extraction fans. The filters will be monitored for radiation and differential pressure and the air stream routed to the stack, in the same manner as the C5 extraction system and the other vessel vent header. There will be no provision for active control of hydrogen inside the fluidic devices and collection headers, other than by normal operation, since hydrogen will be generated at a low rate and there will be a low probability for achieving 25 % of hydrogen content lower flammability limit. In addition, the volumes of these spaces, compared with the process vessels, will be relatively small, and the consequences of potential conflagration or detonation will also be much smaller than in process vessels.

7.4. Containment System

As described in Section 6.0, vessel V13024A will be one of several vessels located within the cell. A portion of the cell will be lined with stainless steel sheet to provide, as secondary containment, a water-tight membrane that will contain any leaks of dangerous waste. The liner will be fabricated from 0.125 inch thick, formed and welded stainless steel sheet. The sheets will line the sump and cell floor and extend up the sides of the cell to a height of approximately 5.5 feet. The secondary containment volume is sized to contain, at a minimum, 100 percent of the capacity of the largest vessel, as required by

WAC 173-303-640(4)(d). To provide an additional margin of safety, one additional foot of liner height will be added, as freeboard.

The concrete surfaces of the ceiling and the wall above the liner will be covered with a coating that is compatible with the wastes. A sealant, compatible with the liner, wall coating and the waste feeds, will seal the liner-to-wall interface at the top edge of the liner. A typical cross-section of cell wall-to-floor construction and a detail of typical cell wall-to-floor liner are provided in Appendix 6. The liner wall height calculations are provided in Appendix 7.

To ensure that leakage or a spill in the cell is collected by the containment sump, the floor of the cell will slope towards it. The sump will be located at the lowest point in the cell and will contain level instrumentation, plant wash solvent lines, and high-pressure steam lines. The steam lines will connect to ejectors, which will discharge the sump contents to the plant wash vessel via a sample collection vessel. The sample collection vessel will use a RFD auto-sampler system.

Appendix 8 contains the process and instrumentation drawing of V13024A. Sump construction, including secondary containment liner configuration, is shown in Appendix 9. Sump F15524 is the design used for the cesium nitric acid recovery cell sump.

7.5. Sampling System

- The contents of V13024A will be agitated to reduce stratification.

- The liquor in V13024A will be lifted up to the auto-sampler (R15005) of an internally-mounted RFD. The auto-sampler will automatically take a sample of the liquor, which will then be placed in a container and transported to the laboratory via a pneumatic transport system. This system will make it possible to draw a sample and route it to the laboratory for analysis with no human contact.

- The V13024A sampler RFD inside the vessel will operate on the entrainment principle, using process air to draw a portion (a dollop) of the eluate for sample testing. Sampling will be accomplished by supplying a pulse of compressed process air to a RFD control cabinet, located outside of the cell, which goes to a jet pump to apply a vacuum to the RFD nozzles located within the vessel. The vacuum will draw eluate into a small charge vessel located inside V13024A. The pulse of air will be stopped, and the valve lineup in the control cabinet rearranged to allow discharge of the charge vessel contents.

  A second pulse of air will then be applied through the charge vessel, which will discharge the contents to an auto-sampler cabinet located in a bulge. The exact location of this auto-sampler has not yet been determined, but will probably be at a higher elevation within the plant than the cell. The sample will be discharged through lines in the top of the vessel, which will probably pass through the upper portion of the cell wall and into an adjacent cell. Where the line leaves the cell through the ceiling into an adjoining bulge, the pipe will bend to prevent shine from the cell into the bulge. The surface surrounding the pipe where it penetrates a wall can either be sealed, or an open channel could be left for piping. This will be determined by HVAC requirements. If the adjoining cell is also a C5 cell, then a tight seal will not be required.

8. Component Descriptions

8.1. Vessel V13024A

- Design standard or code: Cesium Eluate Receipt Vessel, V13024A, is designed to meet the requirements of the American Society of Manufacturing Engineers (ASME) *Boiler and Pressure Vessel Code, Section VIII, Division 1.*

- Design specification: "*Specification for Design and Fabrication of Pressure Vessels*", SP-W375-M00002, will be prepared specifically for design and procurement of vessels for this project.

- Vessel dimensions: The inside diameter of the vessel will be 114 inches, and tangent line-to-tangent line height will be 254 inches. The shell and heads of the vessel will be at least 0.375 inches thick. The heads will be of flanged and dished type, with a dish radius of 102.6 inches and a knuckle radius of 19.4 inches. The overall height of the heads, not including the straight flange, will be 28.4 inches. With these dimensions, the maximum capacity of the vessel will be approximately 11,843 gallons, with a operating volume of approximately 10,774 gallons.

- Vessel support: The vessel will be supported by a 0.31 inch thick skirt that will extend approximately 2 feet below the bottom of the lower vessel head and will have the same inside diameter as the vessel. The skirt will have a base ring containing 20 anchor bolts, and each anchor point will be reinforced with two gussets. The base ring will be bolted to a support structure anchored to the concrete foundation. The skirt will contain access ports to allow ad hoc inspections.

- Vessel material: The vessel will be fabricated from stainless steel using the *ASME Boiler and Pressure Vessel Code, Section VIII, Division I* rules.

- Seismic considerations: *Uniform Building Code*, Zone 2B (only for this report).

8.2. Piping Valves and Fittings

Design standards or codes: Piping design, fabrication, installation, and pressure-testing of process lines will be in accordance with ASME B31.3, "*Process Piping*", Category M Fluid Service. Category M applies to fluid service in which the potential for personnel exposure is judged to be significant, and where a single exposure to a very small quantity of a toxic fluid, caused by leakage can produce serious, irreversible harm to persons, through ingestion of the vapor or droplets or through bodily contact, even when prompt restorative measures are taken. Additional design requirements applied to the piping system are listed below:

- The cesium nitric acid recovery cell will not contain valves.

- All in-cell-piping joints will be welded.

- To minimize in-cell pipe welds, pipe bends will be used in lieu of elbows.

- The sample percentage of welds in active process piping, using radiography for inspection, is yet to be determined.

- Pipes and fittings will be stainless steel of sufficient thickness for the service and design life, including allowances for corrosion, erosion, and thinning due to bending, as applicable.

- Quality assurance measures and seismic qualification will be in accordance with the requirements, based on the quality and seismic classification of the piping.

- The piping system specification will be provided in piping class sheets contained in SP-W375-M00001, Rev. A.

- Details about the piping system supports will be supplied later.

- All piping, fittings, pumps, instruments, and supports will be fabricated of stainless steel.

- The seismic calculations and analysis will be supplied later.

8.3. RFDs P13013A and B

Cesium eluate will be transferred from V13024A to the evaporator kettle using the RFDs P13013 A and B located inside V13024A. Only one RFD will be required for normal operation, the other being available as a standby unit.

RFDs consist of two opposing convergent nozzles and an inlet/outlet port between the nozzles. They provide for maintenance-free transfer of liquids or slurries throughout the treatment process. A typical cross-section of a RFD nozzle is shown in Appendix 10. A typical RFD system arrangement and generic operating instructions are provided in Appendix 11.

8.4. Valves

There will be no valves in the cesium nitric acid recovery system.

There will be an actuated valve in each of the feed lines to V13024A and B which, when open, will allow eluate to flow to the respective vessel. These valves will be part of the cesium ion exchange system, and will be located in another cell.

8.5. Controls and Instrumentation

8.5.1. Vessels V13024A/B

The vessel functions and process will be controlled through the main DCS. Detailed control methods and specifications are not yet available and will be developed during the detailed design stage.

Generally, level measurement will be used to control operational settings within vessels and to activate trip devices associated with the vessel. V13024A will use a density-compensated bubbler for level measurements.

8.5.2. Cesium Nitric Acid Recovery Cell Sump

Release detection instrumentation for in-cell leakage will consist of a bubbler level measurement system in the cell sump. No installed cameras are to be provided in the process cells. Inspection access ports will be provided to allow the insertion of portable cameras for ad hoc inspection of the sump. Additional

access ports and means to perform periodic inspection of the in-cell areas including the underside of the main vessels will be provided.

8.6. Secondary Containment

- Design standards and codes:
  - The building will be designed, fabricated, constructed and tested in accordance with American Concrete Institute (ACI), 349, "Code Requirements for Nuclear Safety Related Concrete Structures".
  - The cell will be designed, fabricated, constructed and tested in accordance with ACI 349.
  - Information about the design, fabrication, construction and testing of the liner will be provided later.
  - Information about the design, fabrication, construction and testing of the sump will be provided later.
- Design specifications:
  - Building: Later
  - Cell: Later
  - Liner: Later
  - Sump: Later
- Dimensions:
  - The cesium nitric acid recovery cell will be approximately 81.5 x 37.5 x 74 feet high.
  - The floor, sump and a portion of the walls will be lined with a stainless steel liner. The liner height will be approximately 5.5 feet. See Appendix 8 for liner sizing calculations.
  - Sump: The are three options available for sump design. See Appendix 12 (Assembly W375-M00267-2) for details.
- Structural support:
  - The cesium nitric acid recovery cell will be an integral part of the pretreatment plant. Therefore, the vessel foundation design requirement will be met by the structural integrity of the plant. The liner of the cell will rest on an approximately ten-foot thick reinforced concrete pad.
- Seismic considerations: *Uniform Building Code* (UBC), Zone 2B (only for this report). More detailed seismic requirements are under consideration.

9. Calculations

9.1. Vessel V13024A Design Conditions and Calculations

This section provides design conditions and a calculations summary associated with V13024A. The actual calculations performed can be provided upon request.

9.1.1. Software

The software used for performing vessel calculations is Compress for Windows, provided by Codeware. Compress for Windows is widely used in the pressure vessel industry for designing vessels to the requirements of ASME Boiler and Pressure Vessel Code, Section VIII, Division 1 (ASME Code).

9.1.2. Main Vessel Calculations

It should be noted that the calculations were performed for each nozzle size and not for each individual nozzle. Appendix 13 presents the details of the V13024A design calculations.

The design conditions are as follows:

Internal design pressure:	15 psig
External design pressure:	0.2 psig
Design temperature:	150 °F

A corrosion allowance of 0.03 inch has been added to the inside surfaces of all vessels in the cell. Since V13024A is located indoors, the calculations do not include wind loads. Please note that although there are values for wind loading in the calculation, this feature is embedded in the software and is difficult to remove. No change has been made to the design parameters as there was no wind input. The seismic analysis (only for this report) is based on the rules of the UBC for seismic zone 2B. More extensive seismic requirements are being considered.

The liquid head due to the vessel contents is based on an operating volume of 10,774 gallons and liquid density of 63.5 pounds per cubic foot. This volume corresponds to a liquid height of 21.1 feet and a liquid pressure of 9.2 psi.

The calculations show that the thickness of the major components of the vessel will exceed those required by the ASME Code. The code required thicknesses for the top head, the shell and the bottom head are 0.0976 inch, 0.1266 inch, and 0.1382 inch respectively. A thickness of 0.375 inch has been specified for all three of these sections of the vessel. Similarly, the skirt analysis established a minimum design thickness of 0.0779 inch and the fabrication thickness will be 0.3125 inch.

The seismic analysis portion of this report was performed using the rules of Uniform Building Code for seismic zone 2B. The seismic zone factor is 0.2, the importance factor is 1.2, the site coefficient is 1.0, and the R_w factor is 3.0. The fundamental frequency of the vessel is calculated to be approximately 60 hertz. The seismic shear at the bottom of the vessel skirt is calculated to be 22,023 lbf, with a corresponding bending moment of approximately 363,110 lbf-ft. This value is provided for operating and corroded conditions. Calculations show that attaching the skirt to a 0.5 inch thick base ring using 20 one-inch diameter bolts on a 118-5/8 inch bolt circle meets the requirements of ASME, Section VIII, Div. I.

The vessel support structure calculation will be generated later.

9.1.3. Charge Vessel Calculations

Design calculations for the charge vessels associated with RFDs, will be generated later. The two process charge vessels and the auto-sampling charge vessel will have the same dimensions: a diameter of 18 inches and a shell length of 22 inches. The shell and heads are 0.5 inches thick.

The design parameters for RFD charge vessels are:

- Internal design pressure: 110 psig
- External design pressure: 15 psig
- Design temperature: 0 °F

9.1.4. Fluidic Mixer Calculations

The design calculations for the fluidic mixers will be generated later. All the fluidic mixers will have the same dimensions, with a diameter of 12 inches and a shell length of 128 inches. The shell and heads will be 0.25 inches thick.

The design parameters for fluidic mixers are:

- Internal design pressure: 110 psig
- External design pressure: 15 psig
- Design temperature: 0 °F

10. Operation

10.1. Primary Vessel Function

Vessels V13024A and B will receive cesium eluate from the cesium ion exchange columns. Each batch will be sampled and analyzed prior to sending it to the evaporator kettle. The vessels will also recycle recovered acid that is off-specification and requires reprocessing to be made useable.

During normal operation, one of the two vessels will receive and sample the cesium eluate and rinse water from the cesium ion exchange columns within a time period of approximately 33.3 hours, while the other vessel feeds the evaporator kettle.

10.2. Spill Overflow Pathways

Prior to V13024A being aligned to receive eluate, the DCS sequence will confirm that adequate vessel capacity exists to accept the expected inflow. If the capacity of V13024A is challenged, excess eluate will be routed, by gravity flow, through an overflow line to V13024B.

The DCS will monitor the vessels for unscheduled level changes, to warn Operations of any potential problem.

11. Waste Characteristics and Material Compatibility

11.1. Dangerous Characteristics of the Waste

The RPP-WTP will treat waste transferred from the Hanford Site double-shell tank (DST) system unit. The supernatant portion of the tank waste, referred to as LAW, will be processed in the pretreatment plant to remove radionuclides to the extent technically and economically practicable.

One of the treatment trains will remove cesium. V13024A will receive eluate from the cesium ion exchange columns. Waste numbers identified in the *Double-Shell Tank System Dangerous Waste Part A Permit Application* (DOE-RL 1996) will be potentially applicable to the cesium eluate. A summary of these dangerous waste numbers is presented in Appendix 14. It should be noted that the waste received from the examined waste tanks in the DST system unit will not exhibit characteristics of ignitability (D001) or reactivity (D003), based on current process knowledge.

A detailed prediction of the waste stream composition has not been determined at this stage of the design. However, the cesium eluate will contain high concentrations of cesium, particularly cesium-137, due to the preferential selectivity of the resin for this isotope. In addition, the waste may also contain elevated concentrations of sodium and potassium also due to preferential selectivity of the resin.

11.2. Compatibility of Waste with Vessel V13024A and Cell Liner/Coating

11.2.1. Vessel V13024A

The compatibility of the eluate wetted materials is a critical element in the design of the vessel, ancillary equipment, ventilation, and secondary containment. The design life for V13024A has been established as 40 years. Additionally, due to the ALARA principle, access to or replacement of the vessel should be minimized.

Material compatibility, particularly as it relates to corrosion, is a key consideration in achieving this service life objective, and is being evaluated for all vessels. Factors that influence corrosion, specifically pH, temperature and halide concentration, are being considered. In V13024A, the expected pH of the eluate stream is estimated to be 0.3 and the expected temperature is conservatively evaluated to be a nominal value of 77 °F. The effect of halogen content (chlorine and fluorine) has not been included in the evaluation, due to lack of halogen specific detail in the chemical composition of the waste stream. It is realized that chlorides and fluorides in nitric acid solutions tend to increase the corrosion rate of stainless steel; therefore, further investigation of the effect of prospective halogen content is ongoing.

Nitric acid wastes containing high concentrations of cesium may cause aggressive corrosion in the form of pitting. For this reason, 316L stainless steel has been selected for this vessel, since it offers greater resistance to pitting attack than 304 or 304L stainless steel.

11.2.2. Coatings and Sealants

The cell liner, coatings applied to the cell walls, and the sealant between the liner-to-wall interface will be compatible with the eluate and waste streams and temperatures and plant wash solvent (2M nitric acid or 2M sodium hydroxide) throughout the fluid temperature range. Evaluation of coating and sealing materials is underway.

11.3. Corrosion Protection

Stainless steel is specified for most waste-wetted surfaces.

Based on experience, a corrosion allowance of 0.03 inch is added to the thickness of the inside surfaces of all in-cell stainless steel vessels. Material compatibility studies are in progress.

Inspection frequencies, methods, and the equipment to be used for the cell sump and in-cell inspections, have yet to be determined. The general philosophy adopted for corrosion and integrity monitoring will be graded approach, where the levels of inspection and surveillance are based on the risks and consequences of corrosion. Due to the low temperatures involved, the low levels of stress cycling, the contents not being highly corrosive, and the vessel being constantly vented, V13024A is judged to be at low risk of failure. Therefore, periodic inspection at approximately five-year intervals, using portable camera equipment, is judged adequate. Details will be confirmed during the B2 detailed design stage.

12. Design Integrity Assessment

12.1. Work Schedule

The integrity assessment process is under development. The outline for the design evaluation phase is in Appendix 15.

References

ACI. 1997. *Code Requirements for Nuclear Safety Related Concrete Structures*, ACI-349-97, 1997 Edition. American Concrete Institute, Farmington Hills, Michigan, USA.

ASME. 1998. *Boiler and Pressure Vessel Code*, 1998 Edition. American Society of Mechanical Engineers. New York, New York, USA.

BNFL. 1999. *System Description for Cesium Nitric Acid Recovery: PT 320*, SD-W375PT-PR00004, Revision 1A, 10 November 1999. BNFL Inc., Richland, Washington, USA.

BNFL. 2000. Piping Class Material Index and Piping Class Sheets, SP-W375-M00001, Revision 00, 6 February 2000. BNFL Inc., Richland, Washington, USA.

DOE-RL. 1996. *Double-Shell Tank System Dangerous Waste Part A Permit Application,* DOE/RL-90-39, Revision 0, 28 June 1991. US Department of Energy, Richland, Washington, USA.

UBC. 1997. Uniform Building Code, 1997 Edition. International Conference of Building Officials, Whittier, California, USA.

WAC 173-303. *Dangerous Waste Regulations*. Washington Administrative Code.

Appendix 1
Basic Flow Diagram for the Cesium Nitric Acid Recovery System: PT System 320

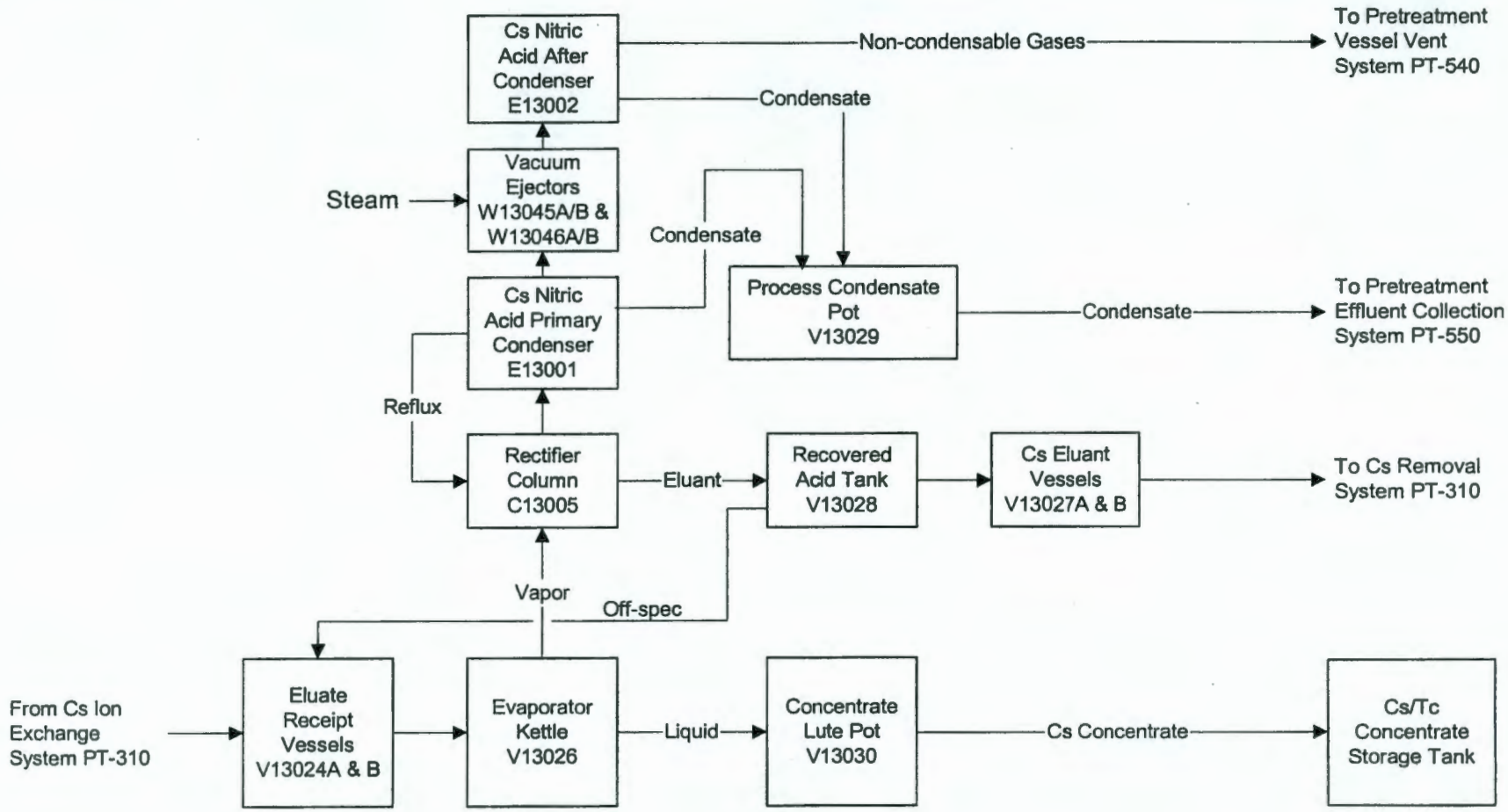
Cs Nitric Acid After Condenser E13002
Non-condensable Gases
To Pretreatment Vessel Vent System PT-540
Condensate
Steam
Vacuum Ejectors W13045A/B & W13046A/B
Condensate
Cs Nitric Acid Primary Condenser E13001
Process Condensate Pot V13029
Condensate
To Pretreatment Effluent Collection System PT-550
Reflux
Rectifier Column C13005
Eluant
Recovered Acid Tank V13028
Cs Eluant Vessels V13027A & B
To Cs Removal System PT-310
Vapor
Off-spec
From Cs Ion Exchange System PT-310
Eluate Receipt Vessels V13024A & B
Evaporator Kettle V13026
Liquid
Concentrate Lute Pot V13030
Cs Concentrate
Cs/Tc Concentrate Storage Tank

Appendix 2
Simplified Process Flow Diagram for PT Systems 310 and 320

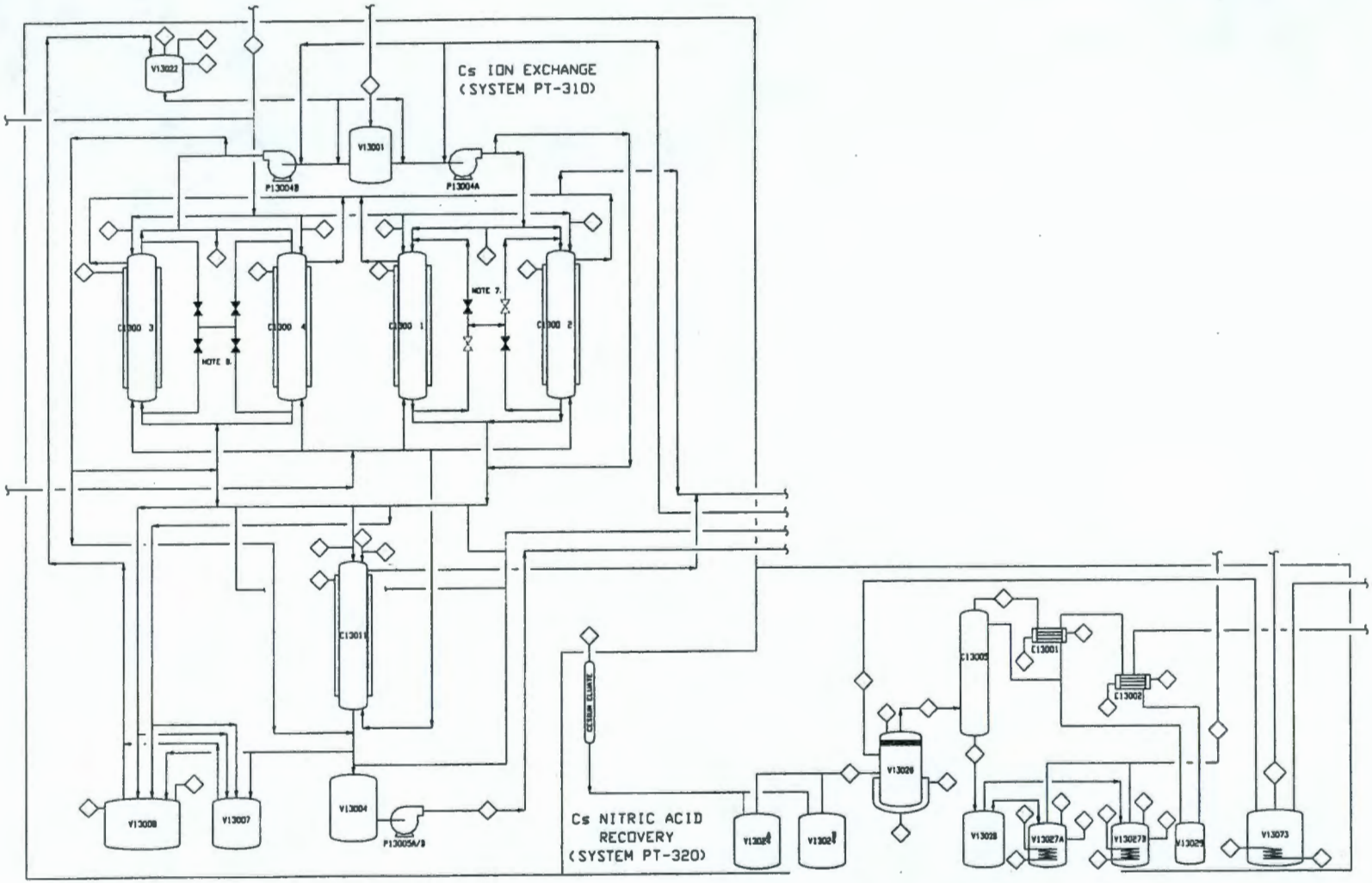
Cs ION EXCHANGE
(SYSTEM PT-310)
V13022
V13001
P13004B
P13004A
NOTE 7.
NOTE 8.
C1300 3
C1300 4
C1300 1
C1300 2
C13011
V13008
V13007
V13004
P13005A/B
CESIUM ELUATE
Cs NITRIC ACID
RECOVERY
(SYSTEM PT-320)
V13026
C13005
C13001
C13002
V13028
V13027A
V13027B
V13029
V13073

1

Appendix 3
Process Flow Diagram of Cesium Nitric Acid Recovery System: PT System 320

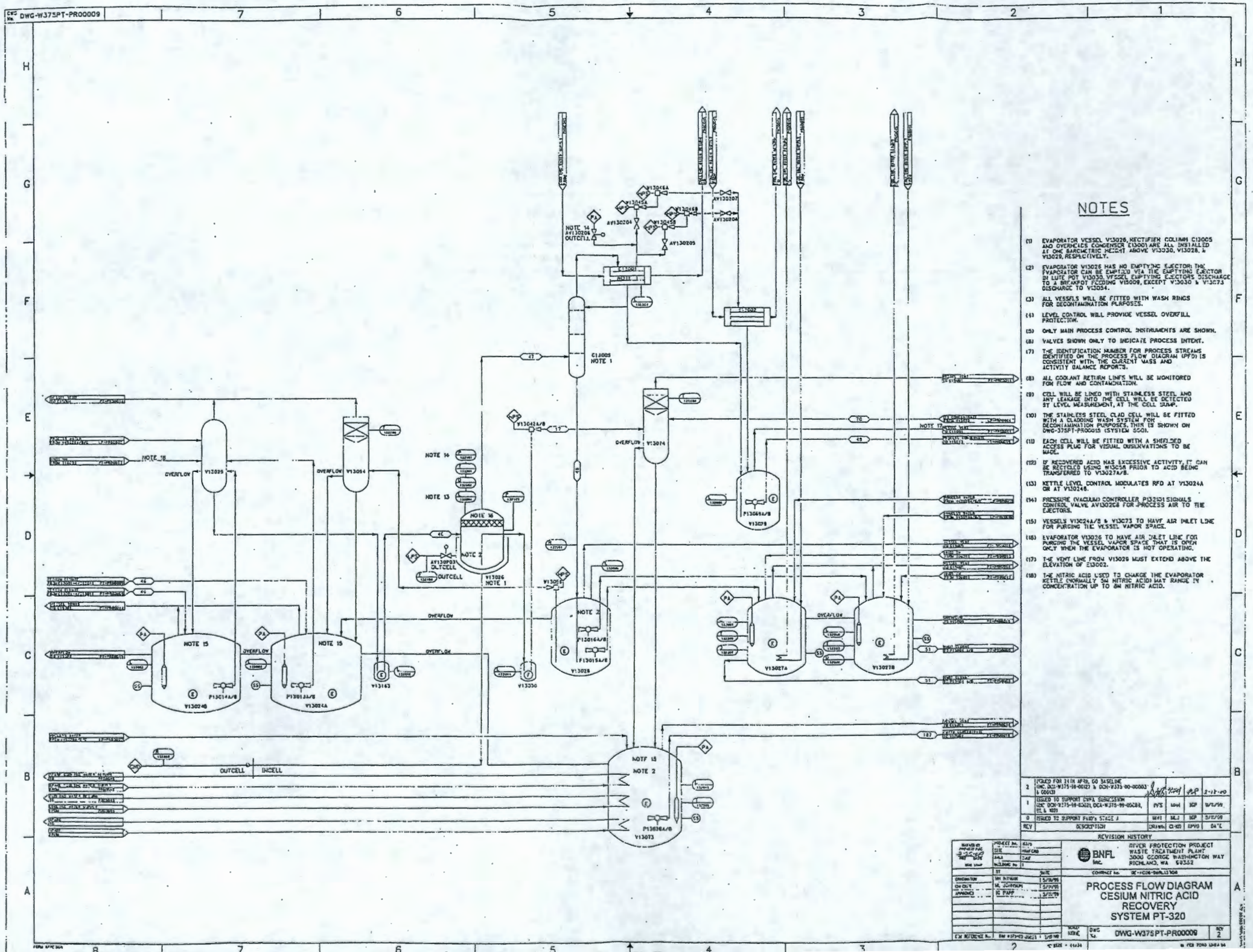
DWG-W375PT-PR00009
NOTES
(1) EVAPORATOR VESSEL V13026, RECTIFIER COLUMN C13005 AND OVERHEADS CONDENSER E13001 ARE ALL INSTALLED AT ONE BAROMETRIC HEIGHT ABOVE V13030, V13028, & V13029, RESPECTIVELY.
(2) EVAPORATOR V13026 HAS NO EMPTYING EJECTOR; THE EVAPORATOR CAN BE EMPTIED VIA THE EMPTYING EJECTOR IN LUTE POT V13030. VESSEL EMPTYING EJECTORS DISCHARGE TO A BREAKPOT FEEDING V13009, EXCEPT V13030 & V13073 DISCHARGE TO V13054.
(3) ALL VESSELS WILL BE FITTED WITH WASH RINGS FOR DECONTAMINATION PURPOSES.
(4) LEVEL CONTROL WILL PROVIDE VESSEL OVERFILL PROTECTION.
(5) ONLY MAIN PROCESS CONTROL INSTRUMENTS ARE SHOWN.
(6) VALVES SHOWN ONLY TO INDICATE PROCESS INTENT.
(7) THE IDENTIFICATION NUMBER FOR PROCESS STREAMS IDENTIFIED ON THE PROCESS FLOW DIAGRAM (PFD) IS CONSISTENT WITH THE CURRENT MASS AND ACTIVITY BALANCE REPORTS.
(8) ALL COOLANT RETURN LINES WILL BE MONITORED FOR FLOW AND CONTAMINATION.
(9) CELL WILL BE LINED WITH STAINLESS STEEL AND ANY LEAKAGE INTO THE CELL WILL BE DETECTED BY LEVEL MEASUREMENT, AT THE CELL SUMP.
(10) THE STAINLESS STEEL CLAD CELL WILL BE FITTED WITH A CLADDING WASH SYSTEM FOR DECONTAMINATION PURPOSES. THIS IS SHOWN ON DWG-375PT-PR00015 (SYSTEM 0001).
(11) EACH CELL WILL BE FITTED WITH A SHIELDED ACCESS PLUG FOR VISUAL OBSERVATIONS TO BE MADE.
(12) IF RECOVERED ACID HAS EXCESSIVE ACTIVITY, IT CAN BE RECYCLED USING V13054 PRIOR TO ACID BEING TRANSFERRED TO V13027A/B.
(13) KETTLE LEVEL CONTROL MODULATES RFD AT V13024A OR AT V13024B.
(14) PRESSURE (VACUUM) CONTROLLER P132101 SIGNALS CONTROL VALVE AV130206 FOR PROCESS AIR TO THE EJECTORS.
(15) VESSELS V13024A/B & V13073 TO HAVE AIR INLET LINE FOR PURGING THE VESSEL VAPOR SPACE.
(16) EVAPORATOR V13026 TO HAVE AIR INLET LINE FOR PURGING THE VESSEL VAPOR SPACE THAT IS OPEN ONLY WHEN THE EVAPORATOR IS NOT OPERATING.
(17) THE VENT LINE FROM V13026 MUST EXTEND ABOVE THE ELEVATION OF E13002.
(18) THE NITRIC ACID USED TO CHARGE THE EVAPORATOR KETTLE (NORMALLY 5M NITRIC ACID) MAY RANGE IN CONCENTRATION UP TO 8M NITRIC ACID.
REVISION HISTORY
REV DESCRIPTION
0 ISSUED TO SUPPORT FHD's STAGE 2
1 ISSUED TO SUPPORT DNFL SUBMISSION
2 ISSUED FOR 24IN AFRB, CD BASELINE
BNFL Inc.
RIVER PROTECTION PROJECT
WASTE TREATMENT PLANT
3000 GEORGE WASHINGTON WAY
RICHLAND, WA 99352
PROCESS FLOW DIAGRAM
CESIUM NITRIC ACID
RECOVERY
SYSTEM PT-320
DWG-W375PT-PR00009
REV 2
OVERFLOW
OUTCELL
INCELL
NOTE 15
NOTE 2
NOTE 13
NOTE 14
NOTE 16
V13029
V13054
V13026
V13028
V13027A
V13027B
V13024A
V13024B
V13073
V13163
V13030
C13005
NOTE 1

Appendix 4
Enlarged Plan View of Cesium Nitric Acid Recovery Cell

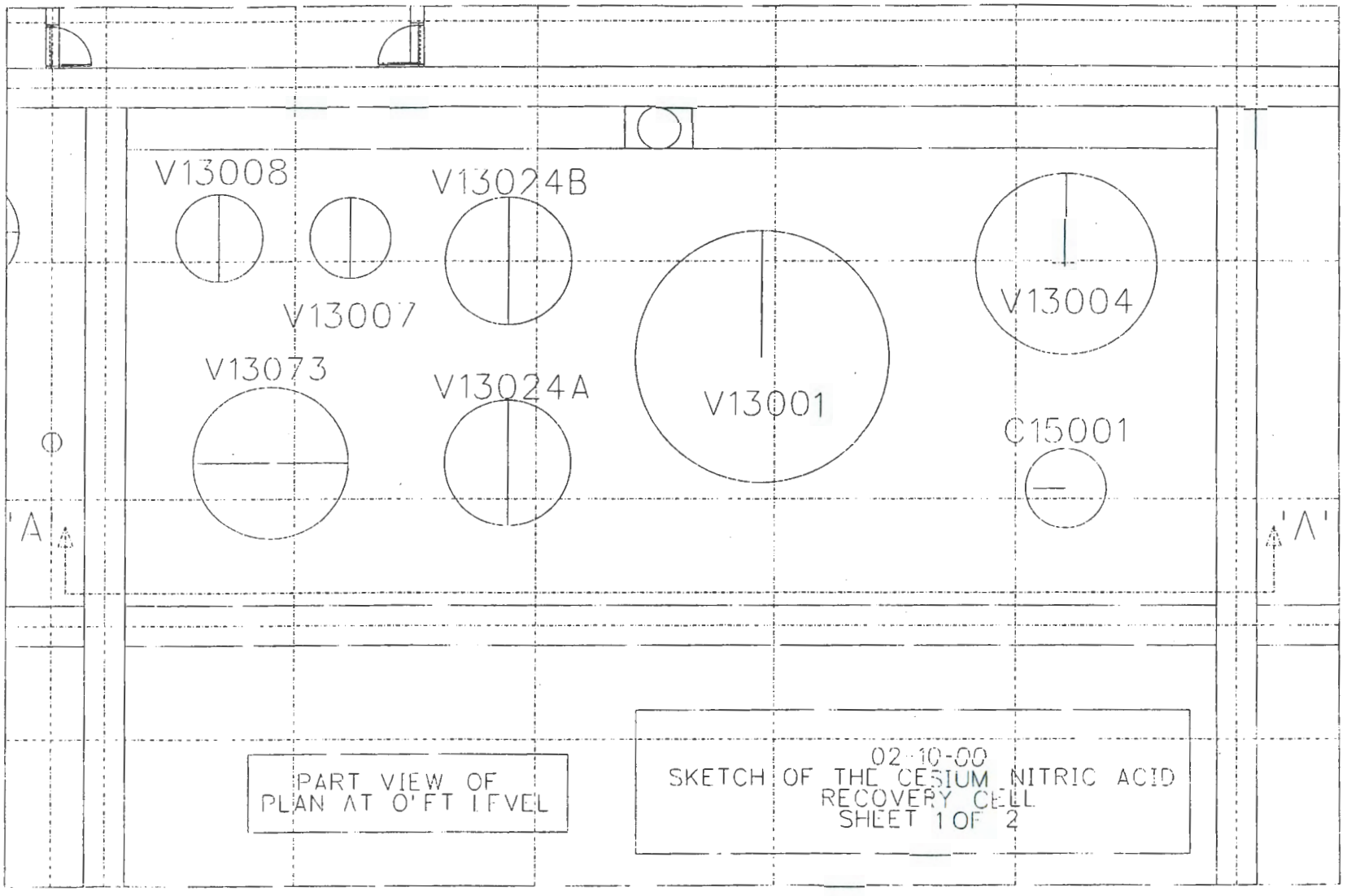
V13008
V13024B
V13007
V13004
V13073
V13024A
V13001
C15001
'A'
'A'
PART VIEW OF
PLAN AT 0'FT LEVEL
02-10-00
SKETCH OF THE CESIUM NITRIC ACID
RECOVERY CELL
SHEET 1 OF 2

1
2

Appendix 5
Elevation of Lower Portion of Cesium Nitric Acid Recovery Cell

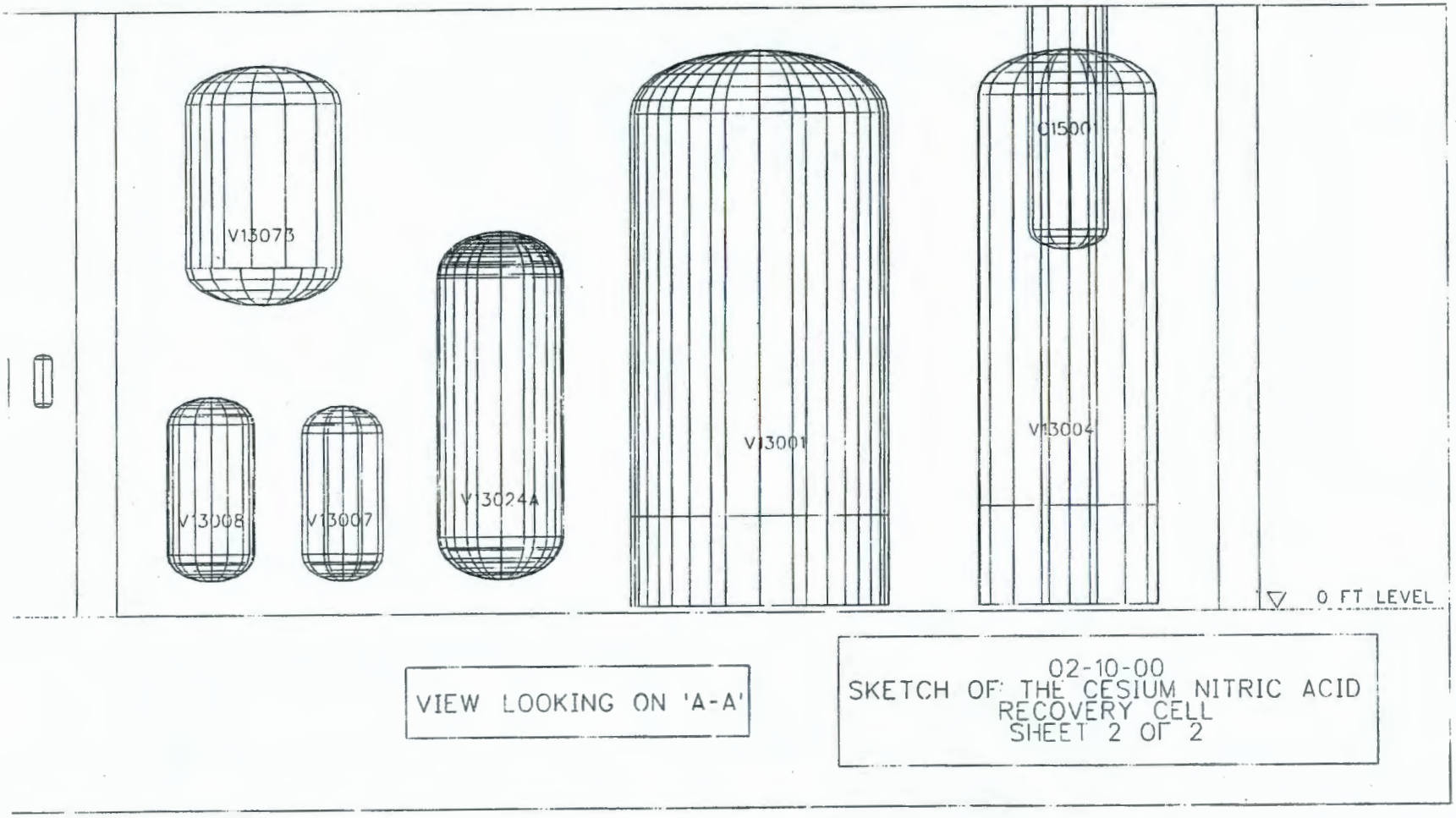
V13073
V13008
V13007
V13024A
V13001
V13004
0 FT LEVEL
VIEW LOOKING ON 'A-A'
02-10-00
SKETCH OF THE CESIUM NITRIC ACID
RECOVERY CELL
SHEET 2 OF 2

1

Appendix 6
Typical Cross Sections of Cell Wall-to-Floor Construction and Wall-to-Liner Details

1

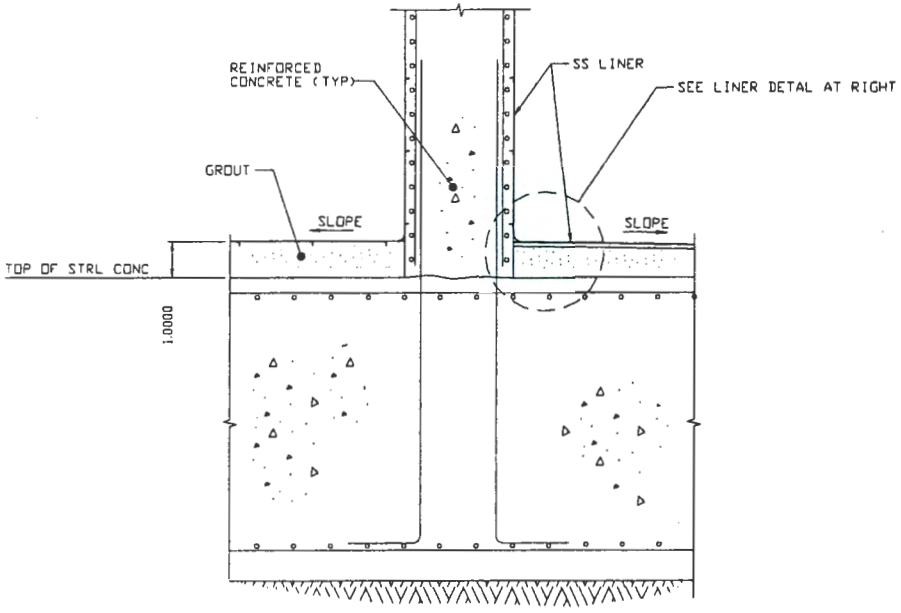

TYPICAL WALL TO FLOOR CONSTRUCTION

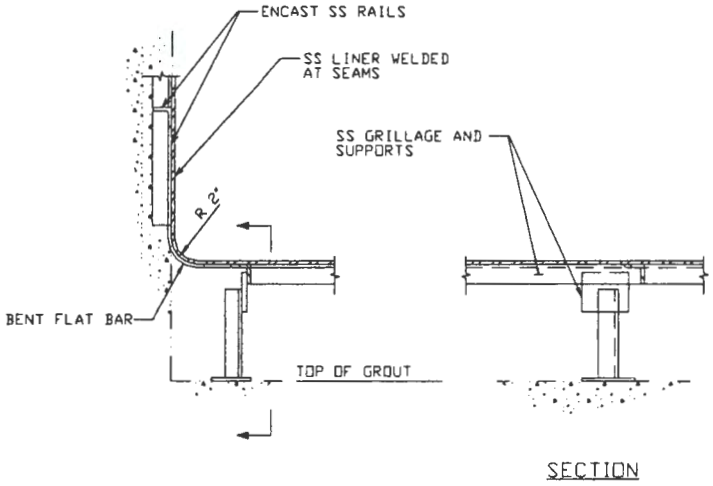

TYPICAL WALL TO FLOOR LINER DETAIL

2

Appendix 7
Liner Wall Height Calculations

Stainless Steel Liner Quantity Estimation

			Based on BNFL NF 0015/1, Issue 3, March 1996													Based on WAC 173-303-640(4)(d)										
Cell No.	Cell name	Vessel identification no.	Maximum capacity (Gal)	Volume (V) (ft^3)	Length a (ft)	Width b (ft)	Slab thickness t ft)	Depth of sump below cell floor s (ft)	Distance from sump to the furthest point on cell floor d (ft)	s+d/100 (ft)	Is s+d/100 < t?	Height Ref. Section 8.3 h (ft)	Volume of liquor Ref. Sec. 8.4 V1 (ft^3)	V-V1 (ft^3)	Height. Ref. Sec.8.4 h1=h+(V-V1)/ab+1.64 (ft)	Area of cell (ft^2)	Deductible tank area (ft^2)	Drop in floor @ 1% slope (ft)	Volume in sloped area (ft^3)	Net volume (ft^3)	Net floor area (ft^2)	Depth of liquor (ft)	Maximum liner height including 1 ft free board	Use maximum liner height (ft)	Area of liner (ft^2) (Base)	Area of liner (ft^2) (Walls)
001	LAW receipt cell	V-11020 A, V-11020B, V-11020 C, V-11020 D, V-11020 E, V-11020 F	445,655	59,620	117.00	159.00	10.0	1.5	98.7	2.5	yes	0.99	6,120.6	53,499.1	5.5	18,603.0	8,310.6	0.59	5,441.4	54,178.3	10,292.4	5.3	6.8	7.0	18603	3864
002	LAW Eva. FD cell (between G.5 & E.3)	V11001B	118,760	15,888	37.1	37.5	10.0	1.5	52.8	2.0	yes	0.53	244.6	15,643.1	13.4	1,391.3	0.0	0.38	260.9	15,626.9	1,391.3	11.2	12.6	13.5	1391	1986
012	LAW Eva. FD cell (between grid lines K & G.5)	V-11001A	118,760	15,888	37.1	41.5	10.0	1.5	55.7	2.1	yes	0.56	285.7	15,602.0	12.3	1,539.7	0.0	0.42	319.5	15,568.2	1,539.7	10.1	11.5	12.5	1540	1932
003	B &D receipt cell (between grid lines G.5 & E.3)	V-12001B, V-12001F V-12010B	93,376	12,492	96.4	37.5	10.0	1.5	103.4	2.5	yes	1.03	1,246.4	11,245.4	5.8	3,615.0	805.1	0.38	677.8	11,814.0	2,809.9	4.2	5.6	6.0	3615	1557
004	B & D receipt cell (between grid lines K & G.5)	V-12001A, V-12001C V-12001D	93,376	12,492	96.4	41.5	10.0	1.5	105.0	2.5	yes	1.05	1,399.6	11,092.3	5.5	4,000.6	981.9	0.42	830.1	11,661.7	3,018.7	3.9	5.3	5.5	4001	1460
005	Permeate hold cell (between grid lines G.5 & E.3)	V-12010A, V-12015B V-12015A	57,626	7,709	62.5	37.5	10.0	1.5	72.9	2.2	yes	0.73	569.4	7,139.8	5.4	2,343.8	353.5	1.59	1,863.3	5,845.9	1,990.3	2.9	5.5	5.5	2344	941
006	Cs/Tc concentrate storage cell (between grid lines K & G.5)	V-12001E, V-13073 V-12007	93,376	12,492	62.5	41.5	10.0	1.5	75.0	2.3	yes	0.75	648.6	11,843.2	7.0	2,593.8	217.0	0.75	973.0	11,518.9	2,376.8	4.8	6.6	7.0	2594	1378
007	Cs removal/nitric acid recovery cell (between grid lines G.5 & E.3)	V-13024A, V-13024B V-13007, V-13008 V-13001, V-13004	66,507	8,897	81.5	37.5	10.0	1.5	89.7	2.4	yes	0.90	914.0	7,983.4	5.1	3,056.3	346.4	0.90	1,370.9	7,526.4	2,709.8	2.8	4.7	5.5	3056	1202
008	Ultra-filtration cell. (between grid lines K & G.5)	V-12006A, V-12006B, V-12006C, V-12004A, V-12004B, V-12011A, V-12011B, V15044	26,577	3,555	81.50	41.50	10.0	1.5	91.5	2.4	yes	0.91	1,031.1	2,524.4	3.3	3,382.3	898.0	0.91	1,546.7	2,008.8	2,484.2	0.8	2.7	3.5	3382	749
009	Effluent treatment cell (between grid lines G.5 & E.3)	V-15018, V-15013,	85,609	11,453	70.5	37.5	10.0	1.5	79.9	2.3	yes	0.80	703.7	10,749.1	6.5	2,643.8	380.2	0.80	1,055.6	10,397.2	2,263.6	4.6	6.4	6.5	2644	1318
010	Entrained solids cell (between grid lines K & G.5)	V-12016A, V-12016B	84,096	11,250	69.5	40.5	10.0	1.5	80.4	2.3	yes	0.80	754.7	10,495.6	6.2	2,814.8	615.8	0.80	1,132.1	10,118.3	2,198.9	4.6	6.4	6.5	2815	1342
011U	Cell at El. -50'-0"	V-15009, V-12002	93376	12,492	70.0	33.0	10.0	1.5	77.4	2.3	yes	0.77	595.9	11,895.9	7.6	2,310.0	871.1	0.77	893.8	11,598.0	1,438.9	8.1	See Note 1	50.0	2310	10220
N/A	Decontamination vessel access (EL. 0')	V14001	1650	250	26.0	9.0	10.0	1.5	22.0	1.7	yes	0.22	17.2	232.8	2.9	234.0	0	0.22	25.7	224.3	234.0	1.0	2.0	3.0	234	210
N/A	Maintenance cave (EL. 27'-6")	N/A	N/A	N/A	68.0	23.0	3.0	1.5	N/A	N/A	N/A	N/A	N/A	N/A	N/A	1,564.0	N/A	N/A	N/A	N/A	1,564.0	N/A	N/A	3.0	1,564	546
N/A	Maintenance cave (EL. 38'-6")	N/A	N/A	N/A	23.5	23.0	N/A	1.5	N/A	N/A	N/A	N/A	N/A	N/A	N/A	540.5	N/A	N/A	N/A	N/A	540.5	N/A	N/A	3.0	541	279
N/A	In-cell pumps, ultra-filters & valves	N/A	N/A	N/A	316.5	38.0	N/A	1.5	83.0	2.3	N/A	N/A	N/A	N/A	N/A	12,027.0	N/A	N/A	N/A	N/A	12,027.0	N/A	N/A	3.0	12,027	2,127
																								Σ	62,660	31,110
																								Add contingency 5% =	3,133	1,556
																								TOTAL=	98,458	sq. ft
																								Total Weight =	251 Tons	

Basis: Sections 7.4 and 8.4, NF 0015/1, Issue 3, March 1996, *Cell Cladding in Stainless Steel*
Assumptions:
1. Only the largest vessel/piping in any cell fails.
2. Piping discharge volume is equal to the largest vessel volume.
3. t = maximum safe slab thickness, assumed same as basement thickness (10 ft).
4. s = sump depth, assumed 1.5 ft

REF: Drawing No. DWG-W375PT-PL00009, Rev. D, 12/21/1999, and DWG-375PT-PT-PL00009, Rev. A, 12/20/1999 *Pretreatment Building General Arrangement Plans at 0'-0" & (-)50'-0"*

NOTES:
1. Since contaminated waste may come from Incell Pumps, Ultrafilters and Valves area at EL. 0', all four walls in this cell are fully lined.
2. Floor/Wall liner thickness is assumed 1/8" (Stainless Steel)

Appendix 8
Process and Instrumentation Diagram of Cesium Nitric Acid Recovery Vessel V13024A

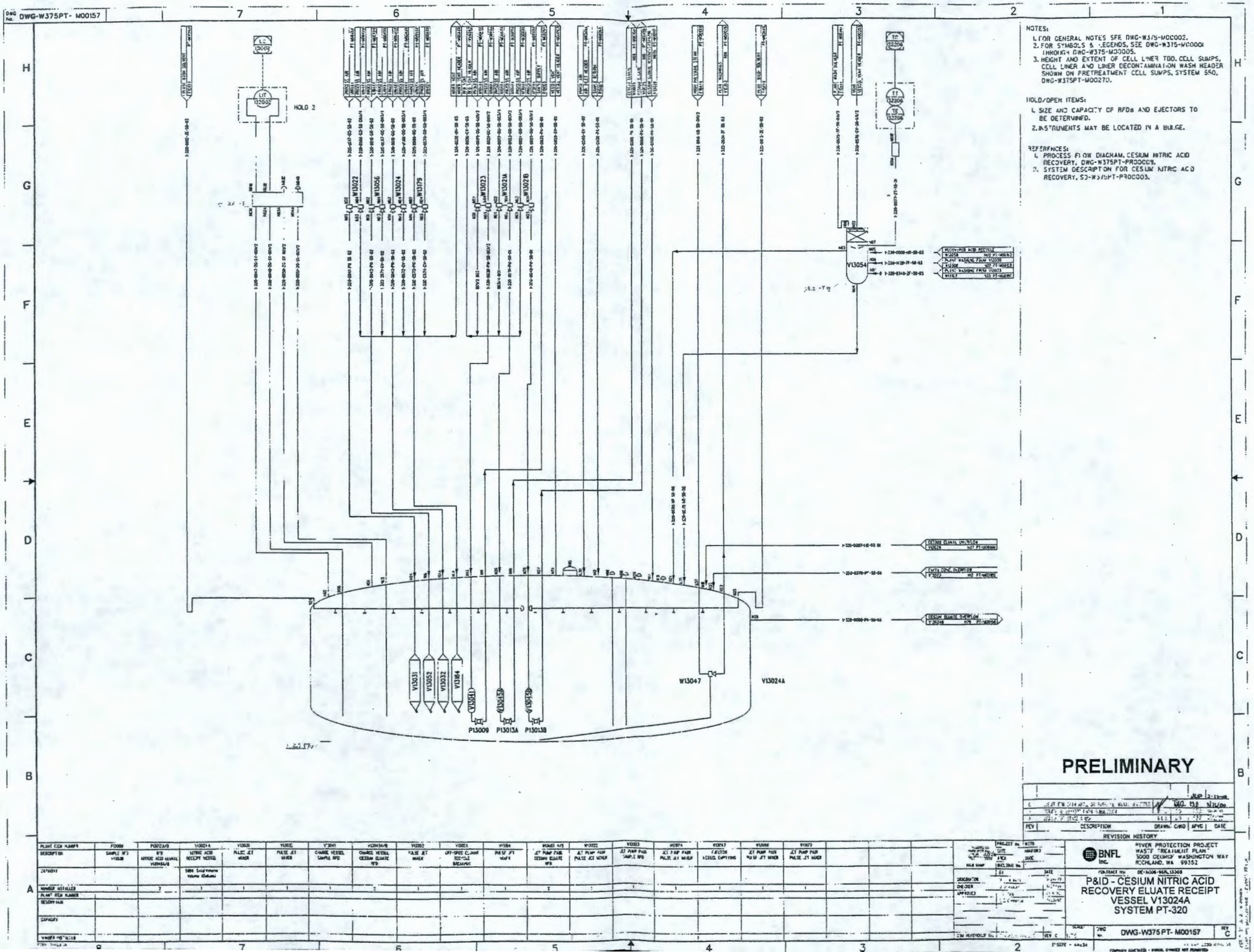
DWG-W375PT- M00157
HOLD 2
V13024A
W13047
P13009
P13013A
P13013B
NOTES:
1. FOR GENERAL NOTES SEE DWG-W375-M00002.
2. FOR SYMBOLS & LEGENDS, SEE DWG-W375-M00001 THROUGH DWG-W375-M00005.
3. HEIGHT AND EXTENT OF CELL LINER TOO. CELL SUMPS, CELL LINER AND LINER DECONTAMINATION WASH HEADER SHOWN ON PRETREATMENT CELL SUMPS, SYSTEM 550, DWG-W375PT-M00270.
HOLD/OPEN ITEMS:
1. SIZE AND CAPACITY OF RFDs AND EJECTORS TO BE DETERMINED.
2. INSTRUMENTS MAY BE LOCATED IN A BULGE.
REFERENCES:
1. PROCESS FLOW DIAGRAM, CESIUM NITRIC ACID RECOVERY, DWG-W375PT-PR00009.
2. SYSTEM DESCRIPTION FOR CESIUM NITRIC ACID RECOVERY, SD-W375PT-PR00003.
PRELIMINARY
REVISION HISTORY
BNFL Inc.
RIVER PROTECTION PROJECT WASTE TREATMENT PLANT
3000 GEORGE WASHINGTON WAY
RICHLAND, WA 99352
P&ID - CESIUM NITRIC ACID RECOVERY ELUATE RECEIPT VESSEL V13024A
SYSTEM PT-320
DWG-W375PT- M00157

Appendix 9
Process and Instrumentation Diagram of Sump F15524

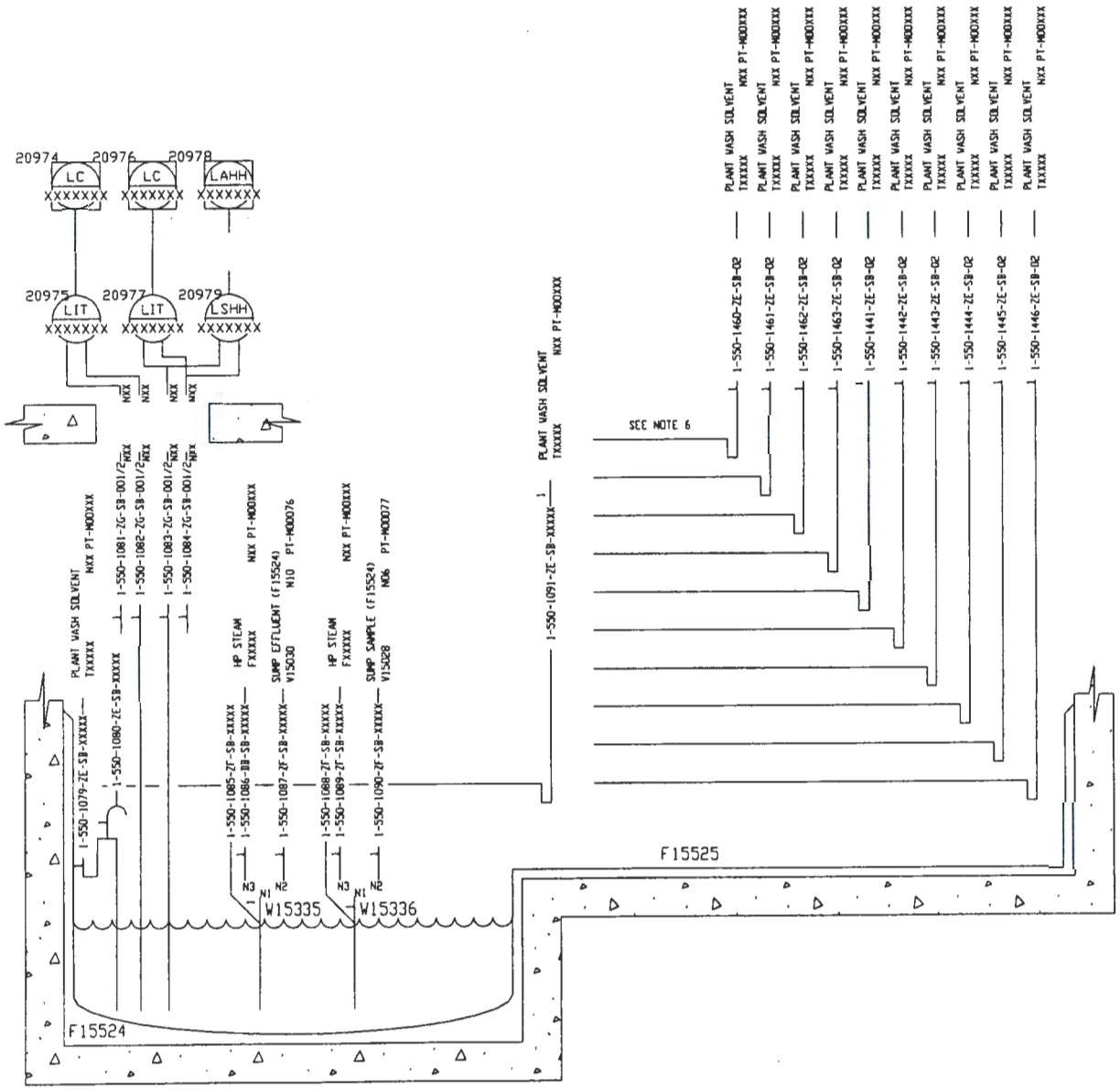
20974
LC
XXXXXXX
20976
LC
XXXXXXX
20978
LAHH
XXXXXXX
20975
LIT
XXXXXXX
20977
LIT
XXXXXXX
20979
LSHH
XXXXXXX
NXX
PLANT WASH SOLVENT
TXXXXX
NXX PT-MOOXXX
1-550-1081-ZG-SB-001/2
1-550-1082-ZG-SB-001/2
1-550-1083-ZG-SB-001/2
1-550-1084-ZG-SB-001/2
1-550-1079-ZE-SB-XXXXX
1-550-1080-ZE-SB-XXXXX
HP STEAM
FXXXXX
SUMP EFFLUENT (F15524)
V15030
N10 PT-MOOO76
1-550-1085-ZF-SB-XXXXX
1-550-1086-BB-SB-XXXXX
1-550-1087-ZF-SB-XXXXX
1-550-1088-ZF-SB-XXXXX
1-550-1089-ZF-SB-XXXXX
SUMP SAMPLE (F15524)
V15028
N06 PT-MOOO77
1-550-1090-ZF-SB-XXXXX
1-550-1091-ZE-SB-XXXXX
N3
N1
N2
W15335
W15336
F15524
F15525
SEE NOTE 6
1-550-1460-ZE-SB-02
1-550-1461-ZE-SB-02
1-550-1462-ZE-SB-02
1-550-1463-ZE-SB-02
1-550-1441-ZE-SB-02
1-550-1442-ZE-SB-02
1-550-1443-ZE-SB-02
1-550-1444-ZE-SB-02
1-550-1445-ZE-SB-02
1-550-1446-ZE-SB-02

1
2

Appendix 10
Typical Cross Sections of Reverse Flow Diverter Nozzle

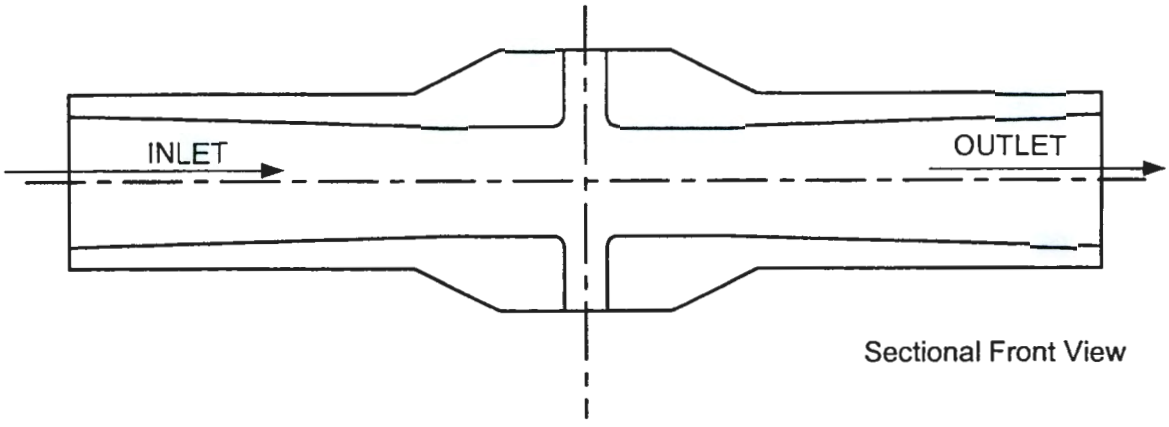

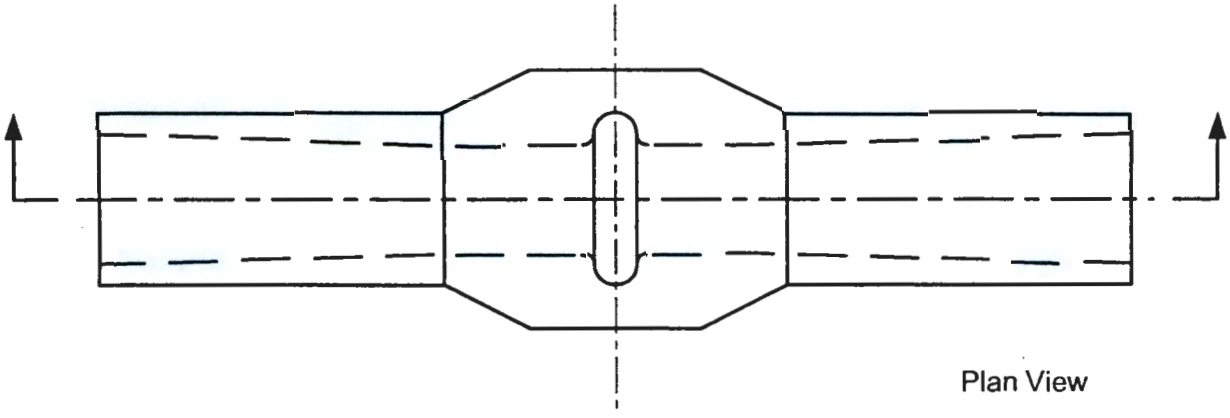

TYPICAL RFD NOZZLE

Appendix 11
Typical Reverse Flow Diverter System Arrangement and Generic Operating Instructions

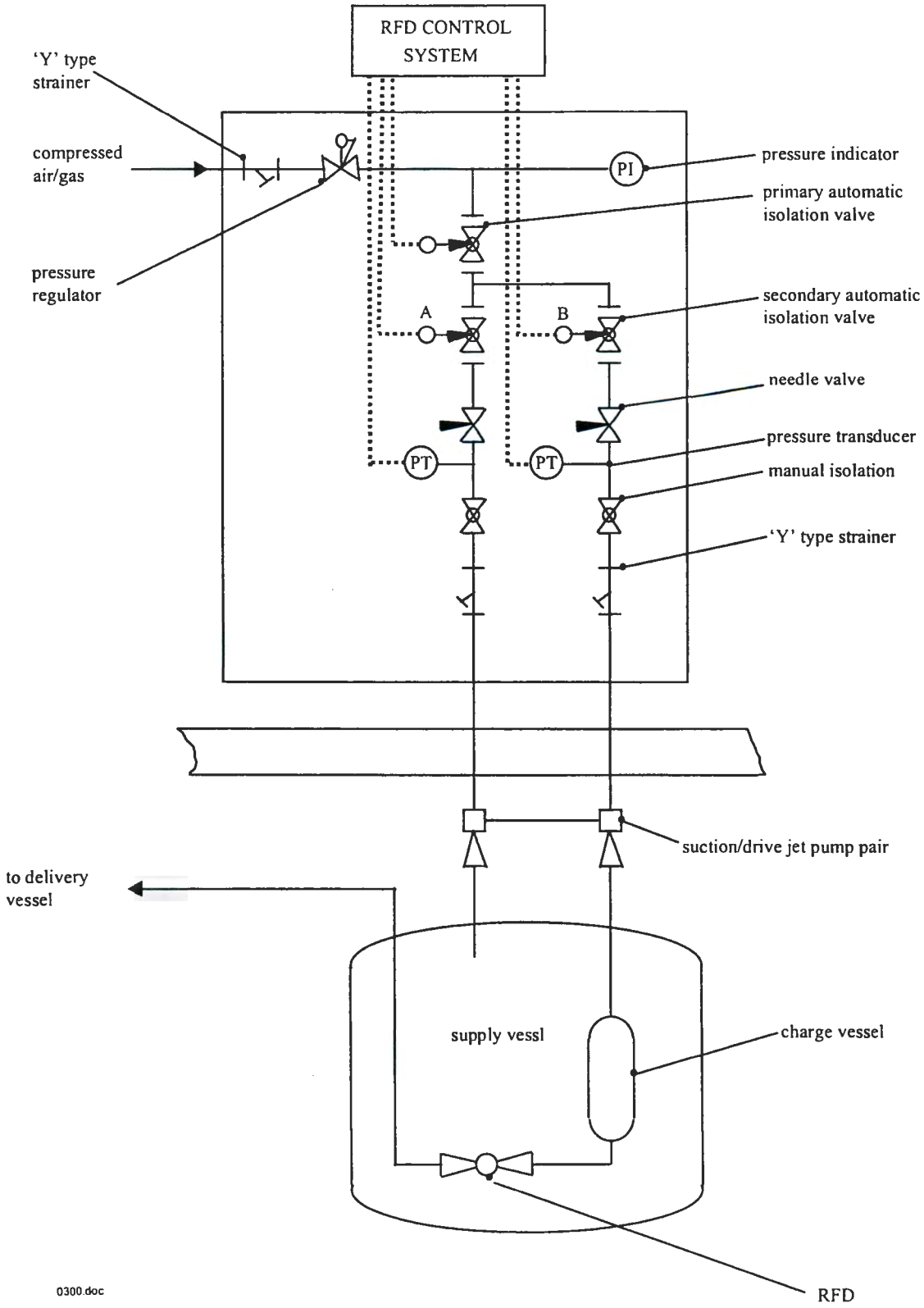
RFD CONTROL SYSTEM
'Y' type strainer
compressed air/gas
pressure regulator
PI
pressure indicator
primary automatic isolation valve
A
B
secondary automatic isolation valve
needle valve
PT
PT
pressure transducer
manual isolation
'Y' type strainer
suction/drive jet pump pair
to delivery vessel
supply vessl
charge vessel
RFD

0300.doc

1

RFD Pump Operations

Operation of the pump is cyclical and the flow of liquid from the pump is not continuous. There are three phases in the cycle: suction phase, drive phase, and blowdown phase.

Figure 1 shows a typical RFD pumping system arrangement.

Suction Phase

In the suction phase, the secondary automatic valve A is open, admitting air to the suction jet pump. Valve B is shut and liquid is drawn from the supply tank through the RFD and into the charge vessel. The suction ejector is designed so that it cannot produce a vacuum capable of lifting liquid higher than a certain valve known as the "suction lift". After a short time, the liquid reaches this "suction life" height and stops, then valve A is shut.

Drive Phase

When valve A is shut, valve B is opened, admitting air to the drive nozzle. Air passes through the nozzle and pressurizes the charge vessel. Liquid is forced across the RFD and into the delivery pipe. The delivery pipe is quickly filled with liquid that flows into the delivery vessel.

Blowdown Phase

When the charge vessel is nearly empty, valve B is shut; no air is supplied to either jet pump. The compressed air in the charge vessel passes back through the paired jet pumps, down the vent pipe, and into vessel vent system.

Shortly after blowdown begins, the pressure in the charge vessel falls below the delivery head and the flow of liquid into the delivery vessel is halted. The liquid in the delivery vessel then falls back down the pipe, across the RFD, and into the charge vessel. After a short time the pressure in the charge vessel falls to zero (gauge). The cycle is now complete.

Appendix 12
Pretreatment Plant Sump Design Options

DWG-W375PT-M00267

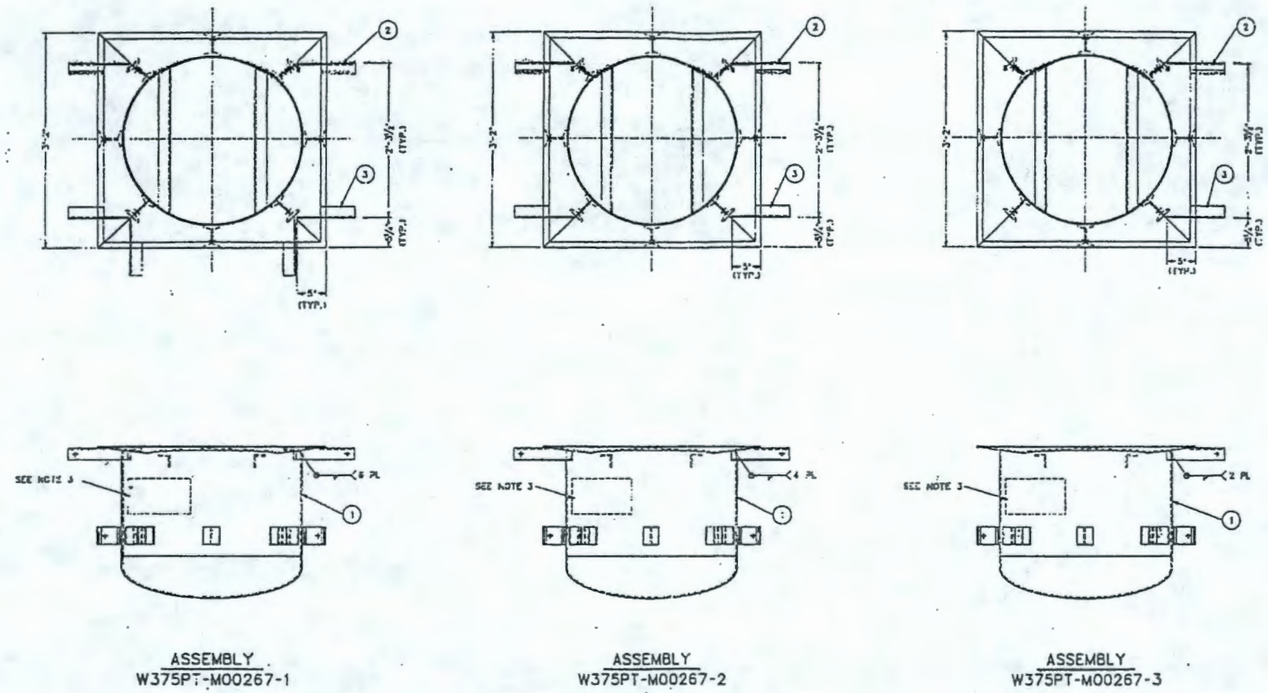

ASSEMBLY
W375PT-M00267-1

ASSEMBLY
W375PT-M00267-2

ASSEMBLY
W375PT-M00267-3

ASSEMBLY W375PT-M00267-1 PARTS/MATERIAL LIST

ITEM	QTY	DESCRIPTION	REFERENCE	CL	MATL
1	1	SUB-ASSEMBLY - A	DWG-W375PT-M00268		
2	3	LINER SUPPORT, DETAIL 4	DWG-W375PT-M00268		
3	3	LINER SUPPORT, DETAIL 5	DWG-W375PT-M00268		

ASSEMBLY W375PT-M00267-2 PARTS/MATERIAL LIST

ITEM	QTY	DESCRIPTION	REFERENCE	CL	MATL
1	1	SUB-ASSEMBLY - A	DWG-W375PT-M00268		
2	1	LINER SUPPORT, DETAIL 4	DWG-W375PT-M00268		
3	2	LINER SUPPORT, DETAIL 5	DWG-W375PT-M00268		

ASSEMBLY W375PT-M00267-3 PARTS/MATERIAL LIST

ITEM	QTY	DESCRIPTION	REFERENCE	CL	MATL
1	1	SUB-ASSEMBLY - A	DWG-W375PT-M00268		
2	1	LINER SUPPORT, DETAIL 4	DWG-W375PT-M00268		
3	1	LINER SUPPORT, DETAIL 5	DWG-W375PT-M00268		

NOTES:

1. FABRICATION, INSPECTION, ACCEPTANCE AND SHIPPING REQUIREMENTS IN STRICT ACCORDANCE WITH SP-W375PT-WXXXXX.
2. DIMENSIONS AND TOLERANCES AS PER ASME / ANSI - Y14.5. ALL DIMENSIONS ARE IN INCHES WITH A TOLERANCE OF PLUS OR MINUS 1/64". ALL DIMENSION AND TOLERANCES APPLY AT FINAL ACCEPTANCE, UNLESS OTHERWISE SPECIFIED.
3. EACH ASSEMBLY SHALL BE CLEARLY MARKED IN AREA SHOWN. MINIMUM LABEL LETTER HEIGHT 2". MARK IN ACCORDANCE WITH XXXXXXXXXXXXXXXXX, WITH PLANT ITEM NUMBER.
4. ALL WELDS SHALL BE INSPECTED IN ACCORDANCE WITH XXXXXXXXXXXXXXXXX
5. ALL WELDS SHALL BE INSPECTED IN ACCORDANCE WITH XXXXXXXXXXXXXXXXX

PRELIMINARY

THIRD ANGLE PROJECTION

REVISION HISTORY

REV	DESCRIPTION	DRAWN	CHKD	APVD	DATE
1	ISSUED TO SUPPORT DAPA SUBMISSION				

BNFL Inc.
RIVER PROTECTION PROJECT
WASTE TREATMENT PLANT
2000 GEORGE WASHINGTON WAY
RICHLAND, WA 99352

CONTRACT NO. DE-AC06-96RL13364

PRETREATMENT SUMP
ASSEMBLIES
SHEET 1 OF 2

DWG- W375PT-M00267 REV A

DWG No. DWG-W375 PT-M00268

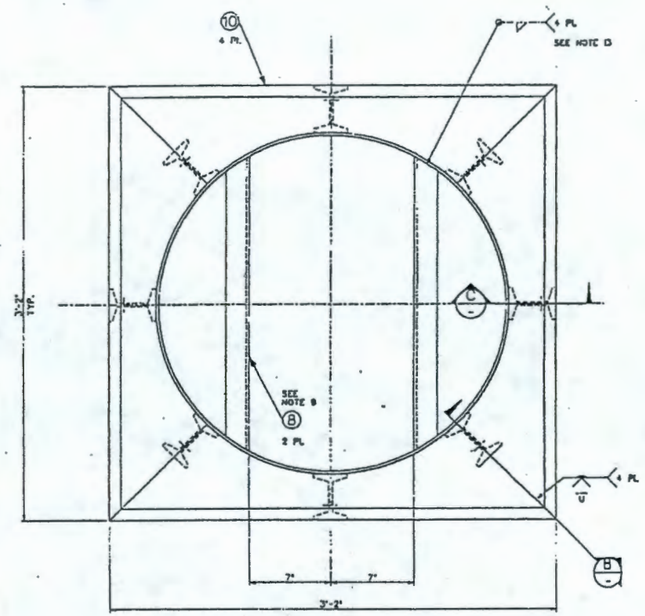

SUB-ASSEMBLY A
PLAN VIEW

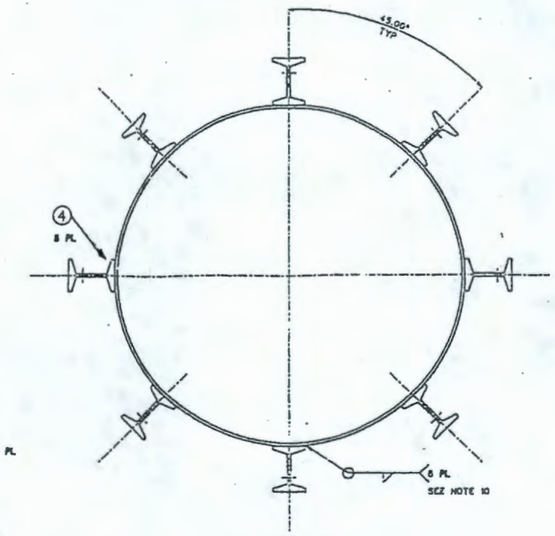

SECTION A

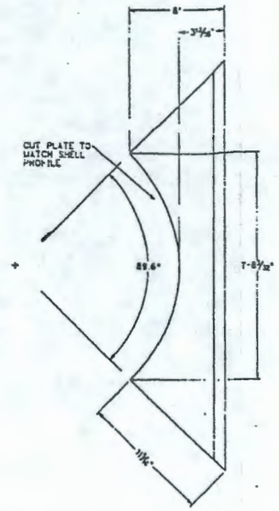

DETAIL 7

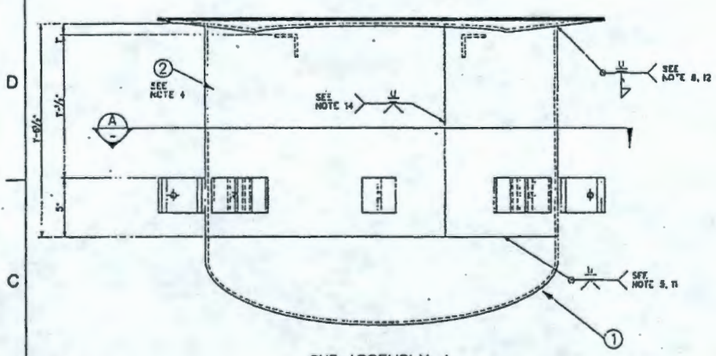

SUB-ASSEMBLY A
ELEVATION VIEW

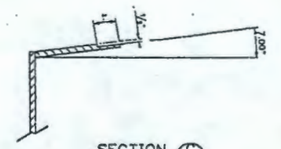

SECTION C
HALF SCALE

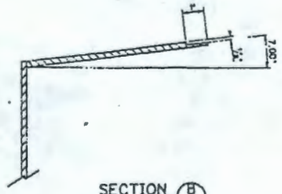

SECTION B
HALF SCALE

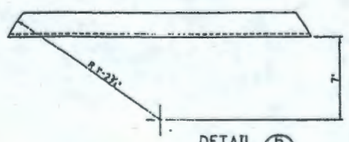

DETAIL 6

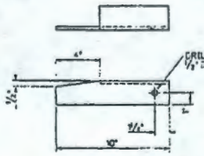

DETAIL 5

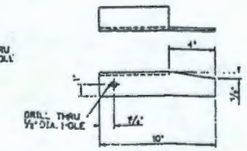

DETAIL 4

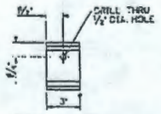

DETAIL 3

PARTS/MATERIAL LIST

ITEM	QTY	DESCRIPTION	REFERENCE	DL	MATL
1	1	STANDARD DISHED HEAD, 304L SST ANY GRADE, 1/2" THK.			
2	1	SHELL, 30" O.D. x 48 1/2" LG., 304 SST ANY GRADE, 1/2" THK			
3	8	3/4 x 8.5, 2" LG., 304, SST, ANY GRADE			
4	4	L 3x3x1/4", 10" LG, 304L SST, ANY GRADE			
5	4	L 2x2x1/4", 11" LG, 304L SST, ANY GRADE			
6	1	L 3x3x1/4", 27" LG, 304L SST, ANY GRADE			
7	4	PLATE, 24 x 8, 304L SST ANY GRADE 1/2" THK			

NOTES:

1. FABRICATION, INSPECTION, ACCEPTANCE AND SHIPPING REQUIREMENTS IN STRICT ACCORDANCE WITH SP-W375PT-WXXXXX.
2. DIMENSIONS AND TOLERANCES AS PER ASME / ANSI - Y14.5. ALL DIMENSIONS ARE IN INCHES WITH A TOLERANCE OF PLUS OR MINUS 1/64". ALL DIMENSION AND TOLERANCES APPLY AT FINAL ACCEPTANCE, UNLESS OTHERWISE SPECIFIED.
3. BREAK ALL SHARP EDGES , AND REMOVE ALL BURRS.
4. ITEM 2, DOWNSTAND SHALL FROM SINGLE PLATE.
5. WELD ITEM 1 TO ITEM 2, ACCEPTABLE ALTERNATE WELD.

6. ALL WELDS SHALL BE INSPECTED IN ACCORDANCE WITH XXXXXXXXXXXXXXXXX
7. ALL WELDS SHALL BE INSPECTED IN ACCORDANCE WITH XXXXXXXXXXXXXXXXX
8. WELD ITEM 10 TO ITEM 2, ACCEPTABLE ALTERNATE WELD.

9. ITEM 8 TO SUPPORT PHAMERCATOR LINES.
10. ITEM 3 SHALL BE WELDED TO ITEM 2 ON A LINE AROUND THE CIRCUMFERENCE OF ITEM 2, 8 PLACES EQUALLY SPACED.
11. MAXIMUM RADIAL MISMATCH OF ITEM 1 TO ITEM 2 SHALL BE 1/64" ANY MISMATCH TO BE EQUALLY DISTRIBUTED AROUND CIRCUMFERENCE OF SHELL.
12. COPE TOP OF SHELL TO MATCH ITEM 10, TRANSITION PROFILE.
13. WELD ITEM 8 TO ITEM 2, 4 PL.
14. SEAM WELD ITEM 2, ACCEPTABLE ALTERNATE WELD.

PRELIMINARY

REV	DESCRIPTION	DRAWN	CHKD	APVD	DATE
A	ISSUED TO SUPPORT DNFA SUBMISSION		HRC-0137		3/16/09

REVISION HISTORY

THIRD ANGLE PROJECTION

BNFL Inc.
RIVER PROTECTION PROJECT
WASTE TREATMENT PLANT
3000 GEORGE WASHINGTON WAY
RICHLAND, WA 99352

CONTRACT No. DE-AC09-04RL13338

PRETREATMENT SUMP
DETAILS
SHEET 2 OF 2

SCALE 3" = 1'-0" | DWG No. DWG- W375PT-M00268 | REV A

Appendix 13
Preliminary Vessel V13024A Design Calculations

The following appendix contains the output of the preliminary design calculations for vessel V13024A, as produced by the pressure vessel software application COMPRESS (version 6) published by Codeware.

Table Of Contents

1. Nozzle Schedule
2. Pressure Summary
3. Thickness Summary
4. Weight Summary
5. Hydrotest
6. Seismic Code
7. Top Head
8. Straight Flange on Top Head
9. Shell
10. Straight Flange on Bottom Head
11. Bottom Head
12. Support Skirt
13. Support Skirt Base Ring
14. N1 2" Nozzle (N1)
15. N4 1" Nozzle (N4)
16. N5 3/4" Nozzle (N5)
17. N15 24" Manway (N15)

Nozzle Schedule

Nozzle mark	Service	Size	Materials						
			Nozzle	Impact?	Norm?	Pad	Impact?	Norm?	Flange
N1	N1 2" Nozzle	2" Sch 80S	SA-312 TP316L Smls pipe	No	No	N/A	N/A	N/A	N/A
N4	N4 1" Nozzle	1" Sch 80S	SA-312 TP316L Smls pipe	No	No	N/A	N/A	N/A	N/A
N5	N5 3/4" Nozzle	0.61 IDx0.22	SA-312 TP316L Smls pipe	No	No	N/A	N/A	N/A	N/A
N15	N15 24" Manway	23.25 IDx0.38	SA-240 316L (low stress)	No	No	N/A	N/A	N/A	N/A

Pressure Summary

Pressure Summary for Chamber bounded by Bottom Head and Top Head

Identifier	P Design (psi)	T Design (°F)	MAWP (psi)	MAP (psi)	MAEP (psi)	T_c external (°F)	MDMT Rating		Corrosion Allowance (in)
							MDMT (°F)	Exemption	
Top Head	15.0	150.0	77.82	92.07	19.96	150.0	-425.0	Note 1	0.031
Straight Flange on Top Head	15.0	150.0	92.47	109.44	5.15	150.0	-425.0	Note 1	0.031
Shell	15.0	150.0	84.35	109.44	5.15	150.0	-425.0	Note 1	0.031
Straight Flange on Bottom Head	15.0	150.0	84.30	109.44	5.15	150.0	-425.0	Note 1	0.031
Bottom Head	15.0	150.0	68.61	92.07	19.96	150.0	-425.0	Note 1	0.031
N1 2" Nozzle (N1)	15.0	150.0	103.09	121.95	0.20	150.0	-425.0	Note 2	0.000
N4 1" Nozzle (N4)	15.0	150.0	103.09	121.95	0.20	150.0	-425.0	Note 2	0.000
N5 3/4" Nozzle (N5)	15.0	150.0	103.09	121.95	0.20	150.0	-425.0	Note 2	0.000
N15 24" Manway (N15)	15.0	150.0	57.63	69.02	0.20	150.0	-425.0	Note 2	0.031

Minimum design metal temperature (MDMT) is -425.0°F

Chamber MAWP hot & corroded is 57.63 psi @ 150.0°F

Chamber MAP cold & new is 69.02 psi @ 70.0°F

Chamber MAEP is 0.20 psi @ 150.0°F
Vacuum rings did not govern the external pressure rating.

Design notes are available on the Settings Summary page.

Thickness Summary

Component Identifier	Diameter: (in)	Length (in)	Nominal t (in)	Design t (in)	Joint E	Load
Top Head	114.00 ID	30.24	0.3750*	0.0976	1.0000	Internal
Straight Flange on Top Head	114.00 ID	1.50	0.3750	0.1266	1.0000	External
Shell	114.00 ID	251.00	0.3750	0.1266	1.0000	External
Straight Flange on Bottom Head	114.00 ID	1.50	0.3750	0.1266	1.0000	External
Bottom Head	114.00 ID	30.24	0.3750*	0.1382	1.0000	Internal
Support Skirt	114.00/114.00 ID	52.00	0.3125	0.0782	0.5500	Seismic

Diameter:: Diameter:

Nominal t: Vessel wall nominal thickness

Design t: Required vessel thickness due to governing loading + corrosion

Joint E: Longitudinal seam joint efficiency

* Head minimum thickness

Load

internal: Circumferential stress due to internal pressure governs

external: External pressure governs

Wind: Combined longitudinal stress due to STATUS + wind governs

Seismic: Combined longitudinal stress due to STATUS + seismic governs

Weight Summary

Component	Weight (lb) Contributed by Vessel Elements						
	Metal New*	Metal Corroded*	Insulation	Lining	Piping	Operating Liquid	Test Liquid
Top Head	1,575.98	1,446.86	0.00	0.00	0.00	0.00	7,892.20
Shell	9,808.08	8,991.89	0.00	0.00	0.00	82,991.05	92,479.53
Bottom Head	1,625.90	1,492.61	0.00	0.00	0.00	7,650.13	7,741.46
Support Skirt	1,692.37	1,692.37	0.00	0.00	0.00	0.00	0.00
Support Skirt Base Ring	375.00	375.00	0.00	0.00	0.00	0.00	0.00
TOTAL:	**15,077.32**	**13,998.73**	**0.00**	**0.00**	**0.00**	**90,641.18**	**108,113.18**

* Shells with attached nozzles have weight reduced by material cut out for opening.

Component	Weight (lb) Contributed by Attachments						
	Body Flanges	Nozzles & Flanges	Packed Beds	Ladders & Platforms	Trays & Supports	Rings	Vertical Loads
Top Head	0.00	118.15	0.00	0.00	0.00	0.00	0.00
Shell	0.00	0.00	0.00	0.00	0.00	0.00	0.00
Bottom Head	0.00	0.00	0.00	0.00	0.00	0.00	0.00
Support Skirt	0.00	0.00	0.00	0.00	0.00	0.00	0.00
TOTAL:	**0.00**	**118.15**	**0.00**	**0.00**	**0.00**	**0.00**	**0.00**

Vessel operating weight, Corroded: 104,758.07 lb
Vessel empty weight, Corroded: 14,116.89 lb
Vessel empty weight, New: 15,195.47 lb
Vessel test weight, New: 123,308.66 lb

Vessel center of gravity location (from datum)

Vessel Lift Weight, New: 15,195.47 lb
Center of Gravity: 104.94"

Hydrostatic Test Report

Shop test pressure determination for Chamber bounded by Bottom Head and Top Head based on MAWP per UG-99(b)

Shop hydrostatic test gauge pressure is 86.449 psi at 70.00 °F (the chamber MAWP = 57.632 psi)

Identifier	Test pressure psi	Test liquid static head psi	UG-99 stress ratio	UG-99 pressure factor	Stress during test psi	Allowable test stress psi	Stress excessive?
Top Head (1)	90.564	4.115	1.0844	1.5	12,389	22,545	No
Straight Flange on Top Head (1)	90.564	4.115	1.0844	1.5	13,766	22,545	No
Shell (1)	90.564	4.115	1.0844	1.5	13,766	22,545	No
Straight Flange on Bottom Head (1)	90.564	4.115	1.0844	1.5	13,766	22,545	No
Bottom Head (1)	90.564	4.115	1.0844	1.5	12,389	22,545	No
N1 2" Nozzle (N1) (2)	88.541	2.093	1.0000	1.5	13,533	33,818	No
N4 1" Nozzle (N4)	89.967	3.519	1.0000	1.5	12,716	33,818	No
N5 3/4" Nozzle (N5)	88.517	2.069	1.0000	1.5	12,113	33,818	No
N15 24" Manway (N15)	88.132	1.683	1.0844	1.5	26,626	22,545	*Yes*

Notes:
(1) The allowable test stress includes consideration of strain hardening.
(2) N1 2" Nozzle (N1) limits the UG-99 stress ratio.
(3) P_L stresses at nozzle openings have been estimated using the Codeware beam on elastic foundation method.

The field test condition has not been investigated.

Seismic Calculations

Method of seismic analysis: **UBC 1994**
Seismic Zone: 2B
Seismic Zone Factor (table 16-I): Z = 0.2000
Importance Factor: I = 1.2000
Site Coefficient: S = 1.0000
R_W Factor (table 16-P): R_W = 3.0000

Vessel Characteristics

Vessel height: 27.7703 ft
Vessel Weight:
Operating, Corroded: 104758.0703 lb
empty:, Corroded: 14116.8867 lb
Fundamental Period: , T:
Operating, Corroded: 0.0637 sec (f = 15.7016 Hz)
empty:, Corroded: 0.0273 sec (f = 36.6571 Hz)

Period of Vibration Calculation

The fundamental period of vibration T (above) is calculated using the Rayleigh method of approximation:

$T = 2 * PI * Sqr(\{Sum(W_i * y_i^2)\} / \{g * Sum(W_i * y_i)\})$, where

W_i is the weight of the ith lumped mass, and
y_i is its deflection when the system is treated as a cantilever beam.

Seismic Shear Reports:

Operating, Corroded
empty:, Corroded

Basc Shear Calculations

Seismic Shear Report: Operating, Corroded

Component	Elevation of bottom above base (in)	Elastic modulus E (10^6 psi)	Inertia I (ft^4)	Seismic shear at Bottom (lbf)	Bending Moment at Bottom (lbf-ft)
Top Head	303.00	27.9	*	677.79	1,062.92
Shell	52.00	27.9	9.7469	22,083.68	264,710.03
Support Skirt	0.00	27.9	8.84	23,023.13	363,110.44
*Moment of Inertia I varies over the length of the component					

Seismic Shear Report: empty:, Corroded

Component	Elevation of bottom above base (in)	Elastic modulus E (10^6 psi)	Inertia I (ft^4)	Seismic shear at Bottom (lbf)	Bending Moment at Bottom (lbf-ft)
Top Head	303.00	28.3	*	667.21	1,048.18
Shell	52.00	28.3	9.7469	2,872.83	43,388.08
Support Skirt	0.00	28.3	8.84	3,082.07	56,392.88
*Moment of Inertia I varies over the length of the component					

Base Shear Calculations

Operating, Corroded
empty:, Corroded

Base Shear Calculations: Operating, Corroded

C is the lesser of 2.75 and the value computed below: (2.7500)
$1.25 * S / T^{2/3} = 1.25 * 1.0000 / (0.0637)^{2/3} = 7.8380$
(C/R_W) is the greater of 0.4 and the value computed below:: (0.9167)
$C / R_W = 2.7500 / 3.0000 = 0.9167$

$V = Z * I * (C/R_W) * W$

$= 0.2000 * 1.2000 * 0.9167 * 104758.0703$

$= 23046.7773$

Base Shear Calculations: empty:, Corroded

C is the lesser of 2.75 and the value computed below: (2.7500)
$1.25 * S / T^{2/3} = 1.25 * 1.0000 / (0.0273)^{2/3} = 13.7937$
(C/R_W) is the greater of 0.4 and the value computed below:: (0.9167)
$C / R_W = 2.7500 / 3.0000 = 0.9167$

$V = Z * I * (C/R_W) * W$

$= 0.2000 * 1.2000 * 0.9167 * 14116.8867$

$= 3105.7153$

Top Head

ASME Section VIII Division 1, 1998 Edition, A98 Addenda

Component: F&D Head
Material specification: SA-240 316L (low stress)
Rated MDMT per UHA-51(d)(1)(a) = -425°F

Internal design pressure: P = 15.0000 psi @ 150.00°F
External design pressure: P_e = 0.2000 psi @ 150.00°F

Static liquid head:

P_s =0.0000 psi(SG=1.0000, H_s=0.0000", Operating head)
P_{th}=4.1151 psi(SG=1.0000, H_s=114.0000", Horizontal test head)

Corrosion allowance: Inner C = 0.0313" Outer C = 0.0000"

Design MDMT = 0.00°F No impact test performed
Rated MDMT = -425.00°F Material is not normalized

Radiography: Category A joints - Seamless No X-Ray
Head to shell seam - Spot UW-11(a)(5)b Type 1

Estimated weight*: New = 1576.0 lb corr = 1446.9 lb
Capacity*: New = 928.4 US gal corr = 929.6 US gal
* includes straight flange if applicable

Inside diameter = 114.0000"
Crown L = 102.6000
Knuckle radius = 19.3800
Minimum head thickness = 0.3750"
Flange length = 1.5000"
Nominal flange thickness = 0.3750"

M (New)

M=1/4 * [3 + Sqr(L/r)]
=1/4 * [3 + Sqr(102.6000/19.3800)]
=1.3252

M (Corroded)

M=1/4 * [3 + Sqr(L/r)]
=1/4 * [3 + Sqr(102.6313/19.4113)]
=1.3248

Design thickness, (at 150.00°F) Appendix 1-4(d)

t = P*L*M/(2*S*E - 0.20*P) + Corrosion
= 15.0000*102.6313*1.3248/(2*15400.0000*1.00 - 0.20*15.0000) + 0.0313
= 0.0976"

Maximum allowable working pressure, (at 150.00°F) Appendix 1-4(d)

P = 2*S*E*t/(L*M + 0.20*t) - P_s
= 2*15400.0000*1.00*0.3437 / (102.6313*1.3248 + 0.20*0.3437) - 0.0000
= 77.8153 psi

Maximum allowable pressure, (at 70.00°F) Appendix 1-4(d)

P = 2*S*E*t/(L*M + 0.20*t)
= 2*16700.0000*1.00*0.3750 / (102.6000*1.3252 + 0.20*0.3750)
= 92.0665 psi

External Pressure, (Corroded & at 150.00°F) UG-33(d)

A = 0.13 / (R_o / t)
= 0.13 / (102.9750 / 0.0348)
= 0.000042

From table HA-4: B = 592.1425

P_a = B / (R_o / t)
= 592.1425 / (102.9750 / 0.034798)
= 0.2001 psi

Check the external pressure per UG-33(a)(1)

t = 1.67*(P_e+P_{s2})*L*M / (2*S*E - 0.20*1.67*(P_e+P_{s2}))
= 1.67*0.2000*102.6000*1.3248 / (2*15400.0000*1 - 0.20*1.67*0.2000)
= 0.001474"

Design thickness for external pressure P_a = 0.2001 psi

= t + Corrosion = 0.034798 + 0.0313 = 0.066098"

Maximum Allowable External Pressure, (Corroded @ 150.00°F)

A = 0.13 / (R_o / t)
= 0.13 / (102.9750 / 0.3437)
= 0.000417

From table HA-4: B = 5979.1626

P_a = B/(R_o/t)
= 5979.1626 / (102.9750 / 0.3437)
= 19.956671 psi

Check the Maximum External Pressure, UG-33(a)(1) & App. 1-4(c)

P_e = 2*S*E*t / ((L*M + 0.20*t) * 1.67) - P_{s2}
= 2*15400.0000*1*0.3437 / ((102.6313*1.3248 + 0.20*0.3437) * 1.67) - 0.0000
= 46.5960 psi

The maximum allowable external pressure is 19.9567 psi

Head design thickness = 0.0976"

The governing condition is due to internal pressure.

The head thickness of 0.3750" is adequate.

Straight Flange on Top Head

ASME Section VIII Division 1, 1998 Edition, A98 Addenda

Component: Straight Flange
Material specification: SA-240 316L (low stress)

Rated MDMT per UHA-51(d)(1)(a) = -425°F

Internal design pressure: P = 15.0000 psi @ 150.00°F
External design pressure: P_e = 0.2000 psi @ 150.00°F

Static liquid head:

P_s =0.0000 psi(SG=1.0000, H_s=0.0000" Operating head)
P_{th}=4.1151 psi(SG=1.0000, H_s=114.0000", Horizontal test head)
P_{tv}=1.3588 psi(SG=1.0000, H_s=37.6422", Vertical test head)

Corrosion allowance: Inner C = 0.0313" Outer C = 0.0000"

Design MDMT = 0.00°F No impact test performed
Rated MDMT = -425.00°F Material is not normalized

Radiography: Longitudinal joint - Seamless No X-Ray
Circ. joint right/bottom - Spot UW-11(a)(5)b Type 1

Estimated weight: New = 58.6 lb corr = 53.7 lb
Capacity: new = 66.3 US gal corr = 66.4 US gal

ID = 114.0000"
Length L_c = 1.5000"
t = 0.3750"

Design thickness, (at 150.00°F) UG-27(c)(1)

t = P*R/(S*E - 0.60*P) + Corrosion
= 15.0000*57.0313/(15400.0000*1.00 - 0.60*15.0000) + 0.0313
= 0.0869"

Maximum allowable working pressure, (at 150.00°F) UG-27(c)(1)

P = S*E*t/(R + 0.60*t) - P_s
= 15400.0000*1.00*0.3437 / (57.0313 + 0.60*0.3437) - 0.0000
= 92.4740 psi

Maximum allowable pressure, (at 70.00°F) UG-27(c)(1)

P = S*E*t/(R + 0.60*t)
= 16700.0000*1.00*0.3750 / (57.0000 + 0.60*0.3750)
= 109.4364 psi

External Pressure, (Corroded & at 150.00°F) UG-28(c)

L/D_o = 272.9332/114.7500 = 2.3785
D_o/t = 114.7500/0.095339 = 1203.6031

Experimental basin formula

$P_a = [2.42*E/(1-\mu^2)^{0.75}]*[(t/D_o)^{2.50}/(L/D_o-0.45*(t/D_o)^{0.50})] / 3$

$= [2.42*27600000.00/(1-0.30^2)^{0.75}]*[(0.095339/114.750000)^{2.50}/(272.9332/114.7500-0.45*(0.095339/114.7500)^{0.50})] / 3$

= 0.2010 psi

Design thickness for external pressure P_a = 0.2010 psi

= t + Corrosion = 0.095339 + 0.0313 = 0.1266"

Maximum Allowable External Pressure, (Corroded & at 150.00°F) UG-28(c)

L/D_o = 272.9332/114.7500 = 2.3785
D_o/t = 114.7500/0.3437 = 333.8668
From table G: A = 0.000091
From table HA-4: B = 1289.4224

$P_a = 4*B/(3*(D_o/t))$

= 4*1289.4224/(3*(114.7500/0.3437))

= 5.1494 psi

Cylinder design thickness = 0.1266"

The governing condition is due to external pressure.

The cylinder thickness of 0.3750" is adequate.

Thickness Required Due to Pressure + External Loads

Condition	Pressure P (psi)	Allowable Stress Before UG-23 Stress Increase (psi)		Temperature (°F)	CorrosionC (in)	Load	Req'd Thk Due to Tension (in)	Req'd Thk Due to Compression (in)
		S_t	S_c					
Operating, Hot & Corroded	15.00	15400.00	8472.70	150.00	0.0313	Seismic	0.0270	0.0268
Operating, Hot & New	15.00	15400.00	8611.40	150.00	0.0000	Seismic	0.0270	0.0268
Hot Shut Down, Corroded	0.00	15400.00	8472.70	150.00	0.0313	Seismic	0.0003	0.0006
Hot Shut Down, New	0.00	15400.00	8611.40	150.00	0.0000	Seismic	0.0003	0.0007
Empty, Corroded	0.00	16700.00	8961.17	70.00	0.0313	Seismic	0.0003	0.0006

Empty, New	0.00	16700.00	9105.51	70.00	0.0000	Seismic	0.0003	0.0006
Vacuum	-0.20	15400.00	8472.70	150.00	0.0313	Seismic	0.0009	0.0012
Hot Shut Down, Corroded, Weight & Eccentric Moments Only	0.00	15400.00	8472.70	150.00	0.0313	Seismic	0.0004	0.0005

Shell

ASME Section VIII Division 1, 1998 Edition, A98 Addenda

Component: Cylinder
Material specification: SA-240 316L (low stress)

Rated MDMT per UHA-51(d)(1)(a) = -425°F

Internal design pressure: P = 15.0000 psi @ 150.00°F
External design pressure: P_e = 0.2000 psi @ 150.00°F

Static liquid head:

P_s =8.1218 psi (SG=1.0000, H_s=225.0000" Operating head)
P_{th}=4.1151 psi (SG=1.0000, H_s=114.0000", Horizontal test head)
P_{tv}=10.4191 psi(SG=1.0000, H_s=288.6422", Vertical test head)

Corrosion allowance: Inner C = 0.0313" Outer C = 0.0000"

Design MDMT = 0.00°F No impact test performed
Rated MDMT = -425.00°F Material is not normalized

Radiography: Longitudinal joint - Full UW-11(a) Type 1
Circ. joint right/bottom - Spot UW-11(a)(5)b Type 1

Estimated weight: New = 9808.1 lb corr = 8991.9 lb
Capacity: new = 11090.8 US gal corr = 11102.9 US gal

ID = 114.0000"
Length L_c = 251.0000"
t = 0.3750"

Design thickness, (at 150.00°F) UG-27(c)(1)

t = P*R/(S*E - 0.60*P) + Corrosion
= 23.1218*57.0313/(15400.0000*1.00 - 0.60*23.1218) + 0.0313
= 0.1171"

Maximum allowable working pressure, (at 150.00°F) UG-27(c)(1)

P = S*E*t/(R + 0.60*t) - P_s
= 15400.0000*1.00*0.3437 / (57.0313 + 0.60*0.3437) - 8.1218
= 84.3521 psi

Maximum allowable pressure, (at 70.00°F) UG-27(c)(1)

P = S*E*t/(R + 0.60*t)
= 16700.0000*1.00*0.3750 / (57.0000 + 0.60*0.3750)
= 109.4364 psi

External Pressure, (Corroded & at 150.00°F) UG-28(c)

L/D_o = 272.9332/114.7500 = 2.3785
D_o/t = 114.7500/0.095339 = 1203.6031

Experimental basin formula

$P_a = [2.42*E/(1-\mu^2)^{0.75}]*[(t/D_o)^{2.50}/(L/D_o-0.45*(t/D_o)^{0.50})] / 3$

$= [2.42*27600000.00/(1-0.30^2)^{0.75}]*[(0.095339/114.750000)^{2.50}/(272.9332/114.7500-0.45*(0.095339/114.7500)^{0.50})] / 3$

= 0.2010 psi

Design thickness for external pressure P_a = 0.2010 psi

= t + Corrosion = 0.095339 + 0.0313 = 0.1266"

Maximum Allowable External Pressure, (Corroded & at 150.00°F) UG-28(c)

L/D_o = 272.9332/114.7500 = 2.3785
D_o/t = 114.7500/0.3437 = 333.8668
From table G: A = 0.000091
From table HA-4: B = 1289.4224

$P_a = 4*B/(3*(D_o/t))$
= 4*1289.4224/(3*(114.7500/0.3437))
= 5.1494 psi

External Pressure + Weight + Seismic Loading Check (Bergman, ASME paper 54-A-104)

$P_v = VAccel*W / (2*\pi*R_m) + M / (\pi*R_m^2)$
$= 1.2000*10556.90 / (2*\pi*57.2031) + 3176520.25 / (\pi*57.2031^2)$
= 344.2491 lb/in

$\alpha = P_v / (P_e*D_o)$
= 344.249084 / (0.2000*114.7500)
= 15.0000

n = 4

$m = 1.23 / (L/D_o)^2$
$= 1.23 / (272.933228/114.7500)^2$
= 0.2174

Ratio $P_e = (n^2 - 1 + m + m*\alpha) / (n^2 - 1 + m)$
$= (4^2 - 1 + 0.217419 + 0.217419*14.999960) / (4^2 - 1 + 0.217419)$
= 1.2143

Ratio $P_e*P_e \leq$ MAEP design cylinder thickness is satisfactory.

Cylinder design thickness = 0.1266"

The governing condition is due to external pressure.

The cylinder thickness of 0.3750" is adequate.

Thickness Required Due to Pressure + External Loads

Condition	Pressure P (psi)	Allowable Stress Before UG-23 Stress Increase (psi)		Temperature (°F)	CorrosionC (in)	Load	Req'd Thk Due to Tension (in)	Req'd Thk Due to Compression (in)
		S_t	S_c					
Operating, Hot & Corroded	15.00	15400.00	8472.70	150.00	0.0313	Seismic	0.0450	0.0053
Operating, Hot & New	15.00	15400.00	8611.40	150.00	0.0000	Seismic	0.0451	0.0048
Hot Shut Down, Corroded	0.00	15400.00	8472.70	150.00	0.0313	Seismic	0.0178	0.0339
Hot Shut Down, New	0.00	15400.00	8611.40	150.00	0.0000	Seismic	0.0179	0.0340
Empty, Corroded	0.00	16700.00	8961.17	70.00	0.0313	Seismic	0.0012	0.0080
Empty, New	0.00	16700.00	9105.51	70.00	0.0000	Seismic	0.0013	0.0085
Vacuum	-0.20	15400.00	8472.70	150.00	0.0313	Seismic	0.0174	0.0344
Hot Shut Down, Corroded, Weight & Eccentric Moments Only	0.00	15400.00	8472.70	150.00	0.0313	Seismic	0.0029	0.0035

Straight Flange on Bottom Head

ASME Section VIII Division 1, 1998 Edition, A98 Addenda

Component: Straight Flange
Material specification: SA-240 316L (low stress)

Rated MDMT per UHA-51(d)(1)(a) = -425°F

Internal design pressure: P = 15.0000 psi @ 150.00°F
External design pressure: P_e = 0.2000 psi @ 150.00°F

Static liquid head:

P_s =8.1760 psi (SG=1.0000, H_s=226.5000" Operating head)
P_{th}=4.1151 psi (SG=1.0000, H_s=114.0000", Horizontal test head)
P_{tv}=10.4733 psi(SG=1.0000, H_s=290.1422", Vertical test head)

Corrosion allowance: Inner C = 0.0313" Outer C = 0.0000"

Design MDMT = 0.00°F No impact test performed
Rated MDMT = -425.00°F Material is not normalized

Radiography: Longitudinal joint - Full UW-11(a) Type 1
Circ. joint right/bottom - Spot UW-11(a)(5)b Type 1

Estimated weight: New = 58.6 lb corr = 53.7 lb
Capacity: new = 66.3 US gal corr = 66.4 US gal

ID = 114.0000"
Length L_c = 1.5000"
t = 0.3750"

Design thickness, (at 150.00°F) UG-27(c)(1)

t = P*R/(S*E - 0.60*P) + Corrosion
= 23.1760*57.0313/(15400.0000*1.00 - 0.60*23.1760) + 0.0313
= 0.1173"

Maximum allowable working pressure, (at 150.00°F) UG-27(c)(1)

P = S*E*t/(R + 0.60*t) - P_s
= 15400.0000*1.00*0.3437 / (57.0313 + 0.60*0.3437) - 8.1760
= 84.2980 psi

Maximum allowable pressure, (at 70.00°F) UG-27(c)(1)

P = S*E*t/(R + 0.60*t)
= 16700.0000*1.00*0.3750 / (57.0000 + 0.60*0.3750)
= 109.4364 psi

External Pressure, (Corroded & at 150.00°F) UG-28(c)

$L/D_o = 272.9332/114.7500 = 2.3785$
$D_o/t = 114.7500/0.095339 = 1203.6031$

Experimental basin formula

$P_a = [2.42*E/(1-\mu^2)^{0.75}]*[(t/D_o)^{2.50}/(L/D_o-0.45*(t/D_o)^{0.50})] / 3$

$= [2.42*27600000.00/(1-0.30^2)^{0.75}]*[(0.095339/114.750000)^{2.50}/(272.9332/114.7500-0.45*(0.095339/114.7500)^{0.50})] / 3$

$= 0.2010$ psi

Design thickness for external pressure P_a = 0.2010 psi

= t + Corrosion = 0.095339 + 0.0313 = 0.1266"

Maximum Allowable External Pressure, (Corroded & at 150.00°F) UG-28(c)

$L/D_o = 272.9332/114.7500 = 2.3785$
$D_o/t = 114.7500/0.3437 = 333.8668$
From table G: A = 0.000091
From table HA-4: B = 1289.4224

$P_a = 4*B/(3*(D_o/t))$
$= 4*1289.4224/(3*(114.7500/0.3437))$
$= 5.1494$ psi

Cylinder design thickness = 0.1266"

The governing condition is due to external pressure.

The cylinder thickness of 0.3750" is adequate.

Thickness Required Due to Pressure + External Loads

Condition	Pressure P (psi)	Allowable Stress Before UG-23 Stress Increase (psi)		Temperature (°F)	CorrosionC (in)	Load	Req'd Thk Due to Tension (in)	Req'd Thk Due to Compression (in)
		S_t	S_c					
Operating, Hot & Corroded	15.00	15400.00	8472.70	150.00	0.0313	Seismic	0.0469	0.0434
Operating, Hot & New	15.00	15400.00	8611.40	150.00	0.0000	Seismic	0.0469	0.0434
Hot Shut Down, Corroded	0.00	15400.00	8472.70	150.00	0.0313	Seismic	0.0197	0.0162
Hot Shut Down, New	0.00	15400.00	8611.40	150.00	0.0000	Seismic	0.0197	0.0162
Empty, Corroded	0.00	16700.00	8961.17	70.00	0.0313	Seismic	0.0003	0.0002

Empty, New	0.00	16700.00	9105.51	70.00	0.0000	Seismic	0.0003	0.0002
Vacuum	-0.20	15400.00	8472.70	150.00	0.0313	Seismic	0.0193	0.0159
Hot Shut Down, Corroded, Weight & Eccentric Moments Only	0.00	15400.00	8472.70	150.00	0.0313	Seismic	0.0235	0.0196

Bottom Head

ASME Section VIII Division 1, 1998 Edition, A98 Addenda

Component: F&D Head
Material specification: SA-240 316L (low stress)
Rated MDMT per UHA-51(d)(1)(a) = -425°F

Internal design pressure: P = 15.0000 psi @ 150.00°F
External design pressure: P_e = 0.2000 psi @ 150.00°F

Static liquid head:

P_s =9.2011 psi(SG=1.0000, H_s=254.8999", Operating head)
P_{th}=4.1151 psi(SG=1.0000, H_s=114.0000", Horizontal test head)

Corrosion allowance: Inner C = 0.0313" Outer C = 0.0000"

Design MDMT = 0.00°F No impact test performed
Rated MDMT = -425.00°F Material is not normalized

Radiography: Category A joints - Full UW-11(a) Type 1
Head to shell seam - Spot UW-11(a)(5)b Type 1

Estimated weight*: New = 1625.9 lb corr = 1492.6 lb
Capacity*: New = 928.4 US gal corr = 929.6 US gal
* includes straight flange if applicable

Inside diameter = 114.0000"
Crown L = 102.6000
Knuckle radius = 19.3800
Minimum head thickness = 0.3750"
Flange length = 1.5000"
Nominal flange thickness = 0.3750"

M (New)

M=1/4 * [3 + Sqr(L/r)]
=1/4 * [3 + Sqr(102.6000/19.3800)]
=1.3252

M (Corroded)

M=1/4 * [3 + Sqr(L/r)]
=1/4 * [3 + Sqr(102.6313/19.4113)]
=1.3248

Design thickness, (at 150.00°F) Appendix 1-4(d)

t = P*L*M/(2*S*E - 0.20*P) + Corrosion
= 24.2011*102.6313*1.3248/(2*15400.0000*1.00 - 0.20*24.2011) + 0.0313
= 0.1382"

Maximum allowable working pressure, (at 150.00°F) Appendix 1-4(d)

$P = 2*S*E*t/(L*M + 0.20*t) - P_s$
$= 2*15400.0000*1.00*0.3437 / (102.6313*1.3248 + 0.20*0.3437) - 9.2011$
$= 68.6142$ psi

Maximum allowable pressure, (at 70.00°F) Appendix 1-4(d)

$P = 2*S*E*t/(L*M + 0.20*t)$
$= 2*16700.0000*1.00*0.3750 / (102.6000*1.3252 + 0.20*0.3750)$
$= 92.0665$ psi

External Pressure, (Corroded & at 150.00°F) UG-33(d)

$A = 0.13 / (R_o / t)$
$= 0.13 / (102.9750 / 0.0348)$
$= 0.000042$

From table HA-4: B = 592.1425

$P_a = B / (R_o / t)$
$= 592.1425 / (102.9750 / 0.034798)$
$= 0.2001$ psi

Check the external pressure per UG-33(a)(1)

$t = 1.67*(P_e+P_{s2})*L*M / (2*S*E - 0.20*1.67*(P_e+P_{s2}))$
$= 1.67*0.2000*102.6000*1.3248 / (2*15400.0000*1 - 0.20*1.67*0.2000)$
$= 0.001474"$

Design thickness for external pressure P_a = 0.2001 psi

= t + Corrosion = 0.034798 + 0.0313 = 0.066098"

Maximum Allowable External Pressure, (Corroded @ 150.00°F)

$A = 0.13 / (R_o / t)$
$= 0.13 / (102.9750 / 0.3437)$
$= 0.000417$

From table HA-4: B = 5979.1626

$P_a = B/(R_o/t)$
$= 5979.1626 / (102.9750 / 0.3437)$
$= 19.956671$ psi

Check the Maximum External Pressure, UG-33(a)(1) & App. 1-4(c)

$P_e = 2*S*E*t / ((L*M + 0.20*t) * 1.67) - P_{s2}$
$= 2*15400.0000*1*0.3437 / ((102.6313*1.3248 + 0.20*0.3437) * 1.67) - 0.0000$
$= 46.5960$ psi

The maximum allowable external pressure is 19.9567 psi

Head design thickness = 0.1382"

The governing condition is due to internal pressure.

The head thickness of 0.3750" is adequate.

Support Skirt

Material:	SA-240 316L (low stress)
Design temperature, operating:	150°
Design temperature, vacuum:	150°
Inner diameter at top, new:	114 in
Inner diameter at bottom, new:	114 in
Overall length:	52 in
Corrosion allowance inside:	0 in
Corrosion allowance outside:	0 in
Weld joint efficiency top:	0.55
Weld joint efficiency bottom:	0.8
Nominal thickness, new:	0.3125 in

Skirt design thickness, largest of the following + corrosion = 0.0782 in

The governing condition is due to earthquake, compressive stress at the base, operating & new.

The skirt thickness of 0.3125 in is adequate.

Loading	Vessel Condition (Stress)	Governing Skirt Location	Temp. (°F)	Allowable Stress (psi)	Calculated Stress/E (psi)	Required thickness (in)
Wind	operating, corroded (tens)	bottom	150.00	9,990.59	-928.71	0.0290
Wind	operating, corroded (comp)	bottom	150.00	9,990.59	929.60	0.0291
Wind	operating, new (tens)	bottom	150.00	9,990.59	-937.36	0.0293
Wind	operating, new (comp)	bottom	150.00	9,990.59	938.20	0.0293
Wind	empty, corroded (tens)	bottom	70.00	10,569.53	-121.04	0.0036
Wind	empty, corroded (comp)	bottom	70.00	10,569.53	121.94	0.0036
Wind	empty, new (tens)	bottom	70.00	10,569.53	-130.60	0.0039
Wind	empty, new (comp)	bottom	70.00	10,569.53	131.43	0.0039
Wind	test, new (tens)	bottom	70.00	10,569.53	-1,093.95	0.0323
Wind	test, new (comp)	bottom	70.00	10,569.53	1,094.79	0.0324
Wind	vacuum, corroded (tens)	bottom	150.00	9,990.59	-928.71	0.0290
Wind	vacuum, corroded (comp)	bottom	150.00	9,990.59	929.60	0.0291
Seismic	operating, corroded (tens)	bottom	150.00	18,480.00	304.52	0.0051
Seismic	operating, corroded (comp)	bottom	150.00	9,990.59	2,473.59	0.0774
Seismic	operating, new (tens)	bottom	150.00	18,480.00	310.81	0.0053
Seismic	operating, new (comp)	bottom	150.00	9,990.59	2,499.33	0.0782
Seismic	empty, corroded (tens)	bottom	70.00	20,040.00	81.51	0.0013
Seismic	empty, corroded (comp)	bottom	70.00	10,569.53	356.79	0.0105
Seismic	empty, new (tens)	bottom	70.00	20,040.00	87.62	0.0014
Seismic	empty, new (comp)	bottom	70.00	10,569.53	384.53	0.0114
Seismic	vacuum, corroded (tens)	bottom	150.00	18,480.00	304.52	0.0051
Seismic	vacuum, corroded (comp)	bottom	150.00	9,990.59	2,473.59	0.0774

Loading due to wind, operating & corroded

Windward side (tensile)

Required thickness, tensile stress at base:

$t = -W/(\pi*D*S_t*E) + 48*M/(\pi*D^2*S_t*E)$

$= -104{,}275.6/(\pi*114.3125*9{,}990.588*1) + 48*119.5266/(\pi*114.3125^2*9{,}990.588*1)$
$= 0.0290$ in

Required thickness, tensile stress at the top:

$t = -W_t/(\pi*D_t*S_t*E) + 48*M_t/(\pi*D_t^2*S_t*E)$

$= -102{,}583.2/(\pi*114.3125*9{,}990.588*1) + 48*119.5266/(\pi*114.3125^2*9{,}990.588*1)$
$= 0.0286$ in

Leeward side (compressive)

Required thickness, compressive stress at base:

$t = W/(\pi*D*S_c*E_c) + 48*M/(\pi*D^2*S_c*E_c)$

$= 104{,}275.6/(\pi*114.3125*9{,}990.588*1) + 48*119.5266/(\pi*114.3125^2*9{,}990.588*1)$
$= 0.0291$ in

Required thickness, compressive stress at the top:

$t = W_t/(\pi*D_t*S_c*E_c) + 48*M_t/(\pi*D_t^2*S_c*E_c)$

$= 102{,}583.2/(\pi*114.3125*9{,}990.588*1) + 48*119.5266/(\pi*114.3125^2*9{,}990.588*1)$
$= 0.0286$ in

Loading due to wind, operating & new

Windward side (tensile)

Required thickness, tensile stress at base:

$t = -W/(\pi*D*S_t*E) + 48*M/(\pi*D^2*S_t*E)$

$= -105{,}243.7/(\pi*114.3125*9{,}990.588*1) + 48*112.0433/(\pi*114.3125^2*9{,}990.588*1)$
$= 0.0293$ in

Required thickness, tensile stress at the top:

$t = -W_t/(\pi*D_t*S_t*E) + 48*M_t/(\pi*D_t^2*S_t*E)$

$= -103{,}551.3/(\pi*114.3125*9{,}990.588*1) + 48*112.0433/(\pi*114.3125^2*9{,}990.588*1)$
$= 0.0288$ in

Leeward side (compressive)

Required thickness, compressive stress at base:

$t = W/(\pi*D*S_c*E_c) + 48*M/(\pi*D^2*S_c*E_c)$

$= 105{,}243.7/(\pi*114.3125*9{,}990.588*1) + 48*112.0433/(\pi*114.3125^2*9{,}990.588*1)$
$= 0.0293$ in

Required thickness, compressive stress at the top:

$t = W_t/(\pi*D_t*S_c*E_c) + 48*M_t/(\pi*D_t^2*S_c*E_c)$

$= 103{,}551.3/(\pi*114.3125*9{,}990.588*1) + 48*112.0433/(\pi*114.3125^2*9{,}990.588*1)$
$= 0.0289$ in

Loading due to wind, test & new

Windward side (tensile)

Required thickness, tensile stress at base:

$t = -W/(\pi*D*S_t*E) + 48*M/(\pi*D^2*S_t*E)$

$= -122{,}816.4/(\pi*114.3125*10{,}569.53*1) + 48*112.0433/(\pi*114.3125^2*10{,}569.53*1)$
$= 0.0323$ in

Required thickness, tensile stress at the top:

$t = -W_t/(\pi*D_t*S_t*E) + 48*M_t/(\pi*D_t^2*S_t*E)$

$= -121{,}124.1/(\pi*114.3125*10{,}569.53*1) + 48*112.0433/(\pi*114.3125^2*10{,}569.53*1)$
$= 0.0319$ in

Leeward side (compressive)

Required thickness, compressive stress at base:

$t = W/(\pi*D*S_c*E_c) + 48*M/(\pi*D^2*S_c*E_c)$

$= 122{,}816.4/(\pi*114.3125*10{,}569.53*1) + 48*112.0433/(\pi*114.3125^2*10{,}569.53*1)$
$= 0.0324$ in

Required thickness, compressive stress at the top:

$t = W_t/(\pi*D_t*S_c*E_c) + 48*M_t/(\pi*D_t^2*S_c*E_c)$

$= 121{,}124.1/(\pi*114.3125*10{,}569.53*1) + 48*112.0433/(\pi*114.3125^2*10{,}569.53*1)$
$= 0.0319$ in

Loading due to earthquake, operating & corroded

Windward side (tensile)

Required thickness, tensile stress at base:

$t = -W/(\pi*D*S_t*E) + 48*M/(\pi*D^2*S_t*E)$

$= -125{,}130.7/(\pi*114.3125*9{,}990.588*1) + 48*363{,}110.4/(\pi*114.3125^2*9{,}990.588*1)$
$= 0.0051$ in

Required thickness, tensile stress at the top:

$t = -W_t/(\pi*D_t*S_t*E) + 48*M_t/(\pi*D_t^2*S_t*E)$

$= -123{,}099.9/(\pi*114.3125*9{,}990.588*1) + 48*263{,}507.0/(\pi*114.3125^2*9{,}990.588*1)$
$= 0.0035$ in

Leeward side (compressive)

Required thickness, compressive stress at base:

$t = W/(\pi*D*S_c*E_c) + 48*M/(\pi*D^2*S_c*E_c)$

$= 125{,}130.7/(\pi*114.3125*9{,}990.588*1) + 48*363{,}110.4/(\pi*114.3125^2*9{,}990.588*1)$
$= 0.0774$ in

Required thickness, compressive stress at the top:

$t = W_t/(\pi*D_t*S_c*E_c) + 48*M_t/(\pi*D_t^2*S_c*E_c)$

$= 123{,}099.9/(\pi*114.3125*9{,}990.588*1) + 48*263{,}507.0/(\pi*114.3125^2*9{,}990.588*1)$
$= 0.0651$ in

Loading due to earthquake, operating & new

Windward side (tensile)

Required thickness, tensile stress at base:

$t = -W/(\pi*D*S_t*E) + 48*M/(\pi*D^2*S_t*E)$

$= -126{,}292.4/(\pi*114.3125*9{,}990.588*1) + 48*367{,}222.2/(\pi*114.3125^2*9{,}990.588*1)$
$= 0.0053$ in

Required thickness, tensile stress at the top:

$t = -W_t/(\pi*D_t*S_t*E) + 48*M_t/(\pi*D_t^2*S_t*E)$

$= -124{,}261.6/(\pi*114.3125*9{,}990.588*1) + 48*266{,}695.6/(\pi*114.3125^2*9{,}990.588*1)$
$= 0.0034$ in

Leeward side (compressive)

Required thickness, compressive stress at base:

$t = W/(\pi*D*S_c*E_c) + 48*M/(\pi*D^2*S_c*E_c)$

$= 126{,}292.4/(\pi*114.3125*9{,}990.588*1) + 48*367{,}222.2/(\pi*114.3125^2*9{,}990.588*1)$
$= 0.0782$ in

Required thickness, compressive stress at the top:

$t = W_t/(\pi*D_t*S_c*E_c) + 48*M_t/(\pi*D_t^2*S_c*E_c)$

$= 124{,}261.6/(\pi*114.3125*9{,}990.588*1) + 48*266{,}695.6/(\pi*114.3125^2*9{,}990.588*1)$
$= 0.0658$ in

Support Skirt Base Ring

Base configuration:	single base plate
Foundation compressive strength:	750 psi
Anchor bolt material:	Stainless Steel
Anchor bolt allowable stress, S_b:	20,000.00 psi
Bolt circle, BC:	118.625 in
Anchor bolt corrosion allowance:	0 in
Anchor bolt clearance:	0.375 in
Base plate material:	Stainless Steel
Base plate allowable stress, S_p:	20,000.00 psi
Base plate inner diameter, D_i:	109.625 in
Base plate outer diameter, D_o:	121.625 in
Base plate thickness, t_b:	0.5 in
Gusset separation, w:	4 in
Gusset height, h:	4.75 in
Gusset thickness, t_g:	0.375 in
Initial bolt preload:	0 % (0 psi)
Number of bolts, N:	20
Bolt size and type:	1 inch series 8 threaded
Bolt root area (corroded), A_b:	0.551 in^2
Diameter of anchor bolt holes, d_b:	1.375 in

Loading	Vessel condition	Base M (lb-ft)	W (lb)	Required bolt area (in^2)	t_r Base (in)	Foundation bearing stress (psi)
Wind	operating, corroded	119.5	104,650.6	0.0000	0.2824	48.70
Wind	operating, new	112.0	105,618.7	0.0000	0.2837	49.15
Wind	empty, corroded	119.5	14,009.4	0.0000	0.1035	6.54
Wind	empty, new	112.0	15,078.3	0.0000	0.1073	7.04
Wind	test, new	112.0	123,191.4	0.0000	0.3064	57.33
Seismic	operating, corroded	363,110.4	104,650.6	0.1057	0.4631	130.97
Seismic	operating, new	367,222.2	105,618.7	0.1074	0.4655	132.33
Seismic	empty, corroded	56,392.9	14,009.4	0.0220	0.1768	19.09
Seismic	empty, new	60,752.7	15,078.3	0.0238	0.1835	20.56

Anchor bolt load (governing)

$P = -W / N + 48 * M / (N*BC)$
$= -105{,}618.7 / 20 + 48 * 367{,}222.2 / (20*118.625)$
$= 2{,}148.64$ lb

Required area per bolt $= P / S_b = 0.107432\ in^2$

The area provided (0.551 in^2) by the specified anchor bolt is adequate.

Foundation bearing stress (governing)

$A_c = pi*(D_o^2 - D_i^2)/4 - N*pi*d_b^2/4$
$= \pi*(121.625^2 - 109.625^2)/4 - 20*\pi*1.375^2/4$
$= 2,149.7820\ in^2$

$I_c = \pi*(D_o^4 - D_i^4)/64$
$= \pi*(121.625^4 - 109.625^4)/64$
$= 3,652,030.0000\ in^4$

$f_c = N*A_b*Preload/A_c + W/A_c + 6*M*D_o/I_c + V_a/A_c$
$= 20*0.551*0/2,149.782 + 105,618.7/2,149.782 + 6*367,222.2*121.625/3,652,030 + 21,123.74/2,149.782$
$= 132.33$ psi

As f_c <= 750 psi the base plate width is satisfactory.

Base plate foundation bearing load (governing)

From Brownell & Young, Table 10.3:, l/b = 0.2520965

$M_x = 0.0059*132.3344*13.88357^2 = 150.4968$

$M_y = -0.44555*132.3344*3.5^2 = -722.2797$

$t_r = (6*M_{max} / S_p)^{0.5}$
$= (6*722.2797 / 20,000.00)^{0.5}$
$= 0.4654932$ in

The base plate thickness is satisfactory.

Base plate bolt load (Jawad & Farr eq. 12.13, governing)

Bolt load $F = A_b*f_s = 0.551*3,899.529 = 2,148.64$ lb

$t_r = (3.91*F/(S_y*(2*b/w+w/(2*l)-d_b*(2/w+1/(2*l)))))^{0.5}$
$= (3.91*2,148.64/(36,000.00*(2*3.5/4+4/(2*2)-1.375*(2/4+1/(2*2)))))^{0.5}$
$= 0.3684789$ in

The base plate thickness is satisfactory.

Check skirt for gusset reaction (Jawad & Farr eq. 12.14)

$S_r = 1.5*F*b/(gussets*\pi*t_{sk}^2*h)$
$= 1.5*2,148.64*3.5/(2*\pi*0.3125^2*4.75)$
$= 3,870.34$ psi

As S_r <= 23,100.00 psi the skirt thickness is adequate to resist the gusset reaction.

N1 2" Nozzle (N1)

Reinforcement Calculations for Nozzle MAWP:

$t_{w(lower)}$ = 0.3750 in
Leg_{41} = 0.2500 in
Leg_{43} = 0.2500 in
h_{new} = 0.2500 in

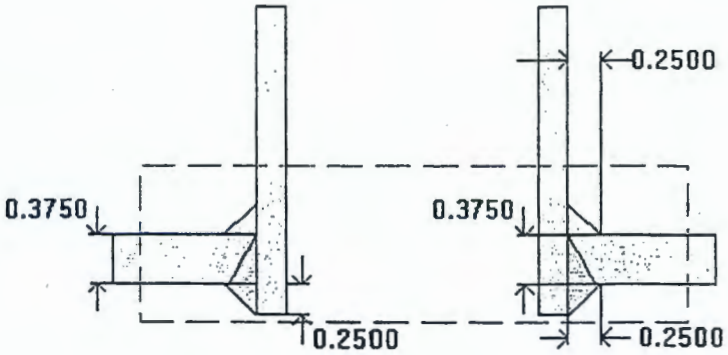

Note: round corners per UW-16(a)(3)

Located on:	Top Head
Liquid static head included:	0 psi
Nozzle material specification:	SA-312 TP316L Smls pipe
Nozzle description:	2" Sch 80S
Nozzle orientation:	90°
Calculated as hillside:	yes
Local vessel thickness:	0.3750 in
End of nozzle to datum line:	279.6491 in
Nozzle inside diameter, new:	1.9390 in
Nozzle nominal wall thickness:	0.2180 in
Nozzle corrosion allowance:	0.0000 in
Opening chord length:	2.1054 in
Projection available outside vessel, Lpr:	6.0000 in
Distance to head center, R:	40.0000 in

UG-37 Area Calculation Summary (in^2) For P = 103.09 psi @ 150.00°F							UG-45 Nozzle Wall Thickness Summary (in) The nozzle passes UG-45	
A required	A available	A_1	A_2	A_3	A_5	A welds	t_{req}	t_{min}
This nozzle is exempt from area calculations per UG-36(c)(3)(a)							0.1348	0.1908

Weld Failure Path Analysis Summary
The nozzle is exempt from weld strength calculations per UW-15(b)(2)

UW-16 Weld Sizing Summary			
Weld description	Required weld throat size (in)	Actual weld throat size (in)	Status
Nozzle to shell fillet (Leg_{41})	0.1526	0.1750	weld size is adequate

Reinforcement Calculations for Nozzle MAP:

UG-37 Area Calculation Summary (in^2) For P = 121.95 psi @ 70.00°F							UG-45 Nozzle Wall Thickness Summary (in) The nozzle passes UG-45	
A required	A available	A_1	A_2	A_3	A_5	A welds	t_{req}	t_{min}
This nozzle is exempt from area calculations per UG-36(c)(3)(a)							0.1348	0.1908

Weld Failure Path Analysis Summary
The nozzle is exempt from weld strength calculations per UW-15(b)(2)

UW-16 Weld Sizing Summary			
Weld description	Required weld throat size (in)	Actual weld throat size (in)	Status
Nozzle to shell fillet (Leg_{41})	0.1526	0.1750	weld size is adequate

Reinforcement Calculations for External Pressure:

UG-37 Area Calculation Summary (in^2) For Pe = 0.20 psi @ 150.00°F							UG-45 Nozzle Wall Thickness Summary (in) The nozzle passes UG-45	
A required	A available	A_1	A_2	A_3	A_5	A welds	t_{req}	t_{min}
This nozzle is exempt from area calculations per UG-36(c)(3)(a)							0.0625	0.1908

Weld Failure Path Analysis Summary
Weld strength calculations are not required for external pressure

UW-16 Weld Sizing Summary			
Weld description	Required weld throat size (in)	Actual weld throat size (in)	Status
Nozzle to shell fillet (Leg_{41})	0.1526	0.1750	weld size is adequate

N4 1" Nozzle (N4)

Reinforcement Calculations for Nozzle MAWP:

$t_{w(lower)} = 0.3750$ in
$Leg_{41} = 0.2500$ in
$Leg_{43} = 0.2500$ in
$h_{new} = 0.2500$ in

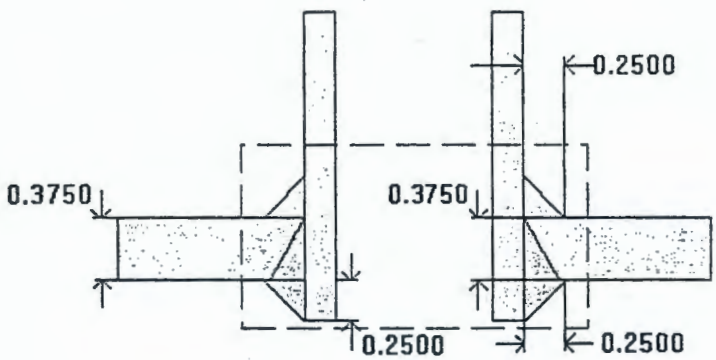

Note: round corners per UW-16(a)(3)

Located on:	Top Head
Liquid static head included:	0 psi
Nozzle material specification:	SA-312 TP316L Smls pipe
Nozzle description:	1" Sch 80S
Nozzle orientation:	180°
Calculated as hillside:	yes
Local vessel thickness:	0.3750 in
End of nozzle to datum line:	279.4317 in
Nozzle inside diameter, new:	0.9570 in
Nozzle nominal wall thickness:	0.1790 in
Nozzle corrosion allowance:	0.0000 in
Opening chord length:	1.0391 in
Projection available outside vessel, Lpr:	6.0000 in
Distance to head center, R:	40.0000 in

UG-37 Area Calculation Summary (in^2) For P = 103.09 psi @ 150.00°F							UG-45 Nozzle Wall Thickness Summary (in) The nozzle passes UG-45	
A required	A available	A_1	A_2	A_3	A_5	A welds	t_{req}	t_{min}
This nozzle is exempt from area calculations per UG-36(c)(3)(a)							0.1164	0.1566

Weld Failure Path Analysis Summary
The nozzle is exempt from weld strength calculations per UW-15(b)(2)

UW-16 Weld Sizing Summary			
Weld description	Required weld throat size (in)	Actual weld throat size (in)	Status
Nozzle to shell fillet (Leg_{41})	0.1526	0.1750	weld size is adequate

Reinforcement Calculations for Nozzle MAP:

UG-37 Area Calculation Summary (in^2) For P = 121.95 psi @ 70.00°F							UG-45 Nozzle Wall Thickness Summary (in) The nozzle passes UG-45	
A required	A available	A_1	A_2	A_3	A_5	A welds	t_{req}	t_{min}
This nozzle is exempt from area calculations per UG-36(c)(3)(a)							0.1164	0.1566

Weld Failure Path Analysis Summary
The nozzle is exempt from weld strength calculations per UW-15(b)(2)

UW-16 Weld Sizing Summary			
Weld description	Required weld throat size (in)	Actual weld throat size (in)	Status
Nozzle to shell fillet (Leg_{41})	0.1253	0.1750	weld size is adequate

Reinforcement Calculations for External Pressure:

UG-37 Area Calculation Summary (in^2) For Pe = 0.20 psi @ 150.00°F							UG-45 Nozzle Wall Thickness Summary (in) The nozzle passes UG-45	
A required	A available	A_1	A_2	A_3	A_5	A welds	t_{req}	t_{min}
This nozzle is exempt from area calculations per UG-36(c)(3)(a)							0.0625	0.1566

Weld Failure Path Analysis Summary
Weld strength calculations are not required for external pressure

UW-16 Weld Sizing Summary			
Weld description	Required weld throat size (in)	Actual weld throat size (in)	Status
Nozzle to shell fillet (Leg_{41})	0.1253	0.1750	weld size is adequate

N5 3/4" Nozzle (N5)

Reinforcement Calculations for Nozzle MAWP:

$t_{w(lower)}$ = 0.3750 in
Leg_{41} = 0.2500 in
Leg_{43} = 0.2500 in
h_{new} = 0.2500 in

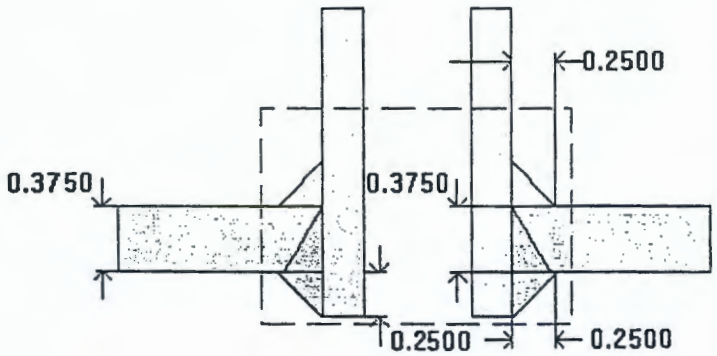

Note: round corners per UW-16(a)(3)

Located on:	Top Head
Liquid static head included:	0 psi
Nozzle material specification:	SA-312 TP316L Smls pipe
Nozzle description:	
Nozzle orientation:	270°
Calculated as hillside:	yes
Local vessel thickness:	0.3750 in
End of nozzle to datum line:	279.3768 in
Nozzle inside diameter, new:	0.6120 in
Nozzle nominal wall thickness:	0.2190 in
Nozzle corrosion allowance:	0.0000 in
Opening chord length:	0.6645 in
Projection available outside vessel, Lpr:	6.0000 in
Distance to head center, R:	40.0000 in

UG-37 Area Calculation Summary (in^2) For P = 103.09 psi @ 150.00°F							UG-45 Nozzle Wall Thickness Summary (in) The nozzle passes UG-45	
A required	A available	A_1	A_2	A_3	A_5	A welds	t_{req}	t_{min}
This nozzle is exempt from area calculations per UG-36(c)(3)(a)							0.0989	0.1916

Weld Failure Path Analysis Summary
The nozzle is exempt from weld strength calculations per UW-15(b)(2)

UW-16 Weld Sizing Summary			
Weld description	Required weld throat size (in)	Actual weld throat size (in)	Status
Nozzle to shell fillet (Leg_{41})	0.1526	0.1750	weld size is adequate

Reinforcement Calculations for Nozzle MAP:

UG-37 Area Calculation Summary (in^2) For P = 121.95 psi @ 70.00°F							UG-45 Nozzle Wall Thickness Summary (in) The nozzle passes UG-45	
A required	A available	A_1	A_2	A_3	A_5	A welds	t_{req}	t_{min}
This nozzle is exempt from area calculations per UG-36(c)(3)(a)							0.0989	0.1916

Weld Failure Path Analysis Summary
The nozzle is exempt from weld strength calculations per UW-15(b)(2)

UW-16 Weld Sizing Summary			
Weld description	Required weld throat size (in)	Actual weld throat size (in)	Status
Nozzle to shell fillet (Leg_{41})	0.1533	0.1750	weld size is adequate

Reinforcement Calculations for External Pressure:

UG-37 Area Calculation Summary (in^2) For Pe = 0.20 psi @ 150.00°F							UG-45 Nozzle Wall Thickness Summary (in) The nozzle passes UG-45	
A required	A available	A_1	A_2	A_3	A_5	A welds	t_{req}	t_{min}
This nozzle is exempt from area calculations per UG-36(c)(3)(a)							0.0625	0.1916

Weld Failure Path Analysis Summary
Weld strength calculations are not required for external pressure

UW-16 Weld Sizing Summary			
Weld description	Required weld throat size (in)	Actual weld throat size (in)	Status
Nozzle to shell fillet (Leg_{41})	0.1533	0.1750	weld size is adequate

N15 24" Manway (N15)

Reinforcement Calculations for Nozzle MAWP:

$t_{w(lower)}$ = 0.3750 in
Leg_{41} = 0.3750 in
Leg_{43} = 0.3750 in
h_{new} = 0.3750 in

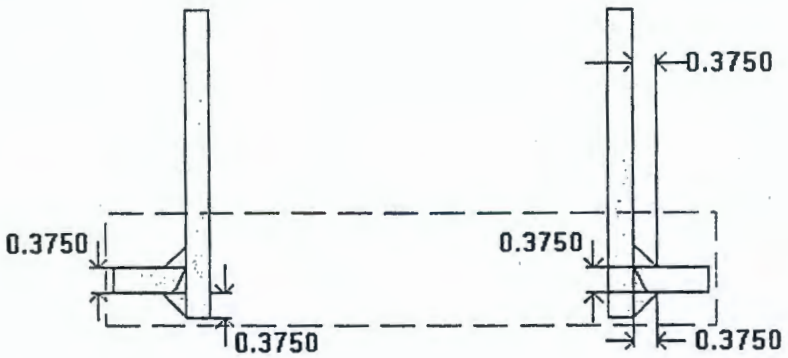

Note: round corners per UW-16(a)(3)

Located on:	Top Head
Liquid static head included:	0 psi
Nozzle material specification:	SA-240 316L (low stress)
Nozzle orientation:	0°
Calculated as hillside:	yes
Local vessel thickness:	0.3750 in
End of nozzle to datum line:	288.6421 in
Nozzle inside diameter, new:	23.2500 in
Nozzle nominal wall thickness:	0.3750 in
Nozzle corrosion allowance:	0.0313 in
Opening chord length:	23.8749 in
Projection available outside vessel, Lpr:	7.8853 in
Distance to head center, R:	22.0000 in

UG-37 Area Calculation Summary (in^2) For P = 57.63 psi @ 150.00°F The opening is adequately reinforced							UG-45 Nozzle Wall Thickness Summary (in) The nozzle passes UG-45	
A required	A available	A_1	A_2	A_3	A_5	A welds	t_{req}	t_{min}
4.5864	4.5995	3.6194	0.5156	0.2148	--	0.2497	0.0938	0.3750

Weld Failure Path Analysis Summary
The nozzle is exempt from weld strength calculations per UW-15(b)(1)

UW-16 Weld Sizing Summary			
Weld description	Required weld throat size (in)	Actual weld throat size (in)	Status
Nozzle to shell fillet (Leg_{41})	0.2406	0.2625	weld size is adequate

Reinforcement Calculations for Nozzle MAP:

UG-37 Area Calculation Summary (in^2) For P = 69.02 psi @ 70.00°F The opening is adequately reinforced							UG-45 Nozzle Wall Thickness Summary (in) The nozzle passes UG-45	
A required	A available	A_1	A_2	A_3	A_5	A welds	t_{req}	t_{min}
5.0504	5.0539	3.8788	0.6127	0.2812	--	0.2812	0.0625	0.3750

Weld Failure Path Analysis Summary
The nozzle is exempt from weld strength calculations per UW-15(b)(1)

UW-16 Weld Sizing Summary			
Weld description	Required weld throat size (in)	Actual weld throat size (in)	Status
Nozzle to shell fillet (Leg_{41})	0.2500	0.2625	weld size is adequate

Reinforcement Calculations for External Pressure:

UG-37 Area Calculation Summary (in^2) For Pe = 0.20 psi @ 150.00°F The opening is adequately reinforced							UG-45 Nozzle Wall Thickness Summary (in) The nozzle passes UG-45	
A required	A available	A_1	A_2	A_3	A_5	A welds	t_{req}	t_{min}
0.4154	8.4113	7.3750	0.5718	0.2148	--	0.2497	0.0938	0.3750

Weld Failure Path Analysis Summary
Weld strength calculations are not required for external pressure

UW-16 Weld Sizing Summary			
Weld description	Required weld throat size (in)	Actual weld throat size (in)	Status
Nozzle to shell fillet (Leg_{41})	0.2406	0.2625	weld size is adequate

Appendix 14
Summary of Potentially Applicable Dangerous Waste Numbers

Characteristic Waste Numbers				Listed Waste Numbers		
D001	D002	D003	D004	F001	F002	F003
D005	D006	D007	D008	F004	F005	F039
D009	D010	D011	D018			
D019	D022	D028	D029			
D030	D033	D034	D035			
D036	D038	D039	D040			
D041	D043	WT01	WT02			
WP01	WP02					

[a] Multi-source leachate (F039) is derived from waste numbers F001 through F005.

Appendix 15
Pre-construction Design Evaluation Report Outline

Outline – Pre-Construction Tank Integrity Assessment Report

The report that will be submitted to an independent party for design assessment of each tank system and the ancillary equipment will contain, at a minimum, the following:

- A sketch of the tank system, including connected piping and fittings. If there is more than one tank in the system, then the individual tanks will be clearly labeled.
- Structural design standards to be used, and the calculations for the non-standard tanks, foundation design, and any required anchoring.
- A description of the dangerous wastes to be stored and their compatibility with the tank system.
- A description of the pressure control system.
- A description of the secondary containment system.
- The design of the ancillary equipment.
- The corrosion potential and the corrosion protection for the tank system.

A "tank system" refers to a dangerous waste storage or treatment tank and its associated ancillary equipment and containment system. "Ancillary equipment" refers to any device, including, but not limited to, such devices as piping, fittings, flanges, valves, and pumps, that is used to distribute, meter, or control the flow of dangerous waste, from its point of generation to a storage or treatment tank(s), between dangerous waste storage and treatment tanks to a point of disposal onsite, or to a point of shipment for disposal offsite.

All the reports for tank systems and the ancillary equipment belonging to a system will be grouped together. Reports for all systems in a building will similarly be grouped together, and the final report that will be submitted to an independent party for design assessment will be composed of reports from all the buildings.

The following will be the outline of the report:

Report for the Design Assessment of the Tank Systems

1.0 Pre-treatment Building

1.1 System 110: LAW Feed Receipt

V11020A-F	LAW Feed Receipt Vessels
V11027	Line Flush Makeup Vessel

1.2 System 120: LAW Feed Evaporation

V11001A/B	LAW Feed Evaporator Feed Vessels
V11002	Evaporator Circulation Vessel
V11004	LAW Fed Evaporator Pulsepot
V11005	LAW Feed Evaporator Process Condensate Pot
V11010	Demister
V11050	LAW Feed Evaporator Lute Pot

V11051A	LAW Feed Evaporator Concentrate Pulsepot
V11051B	LAW Feed Evaporator Concentrate Breakpot

1.3 System 210: HLW Feed Receipt

V12001A-F	Envelope D Receipt Vessels
V12002	Acidic HLW Effluent Collection Vessel
V12003A/B	HLW Effluent Return Breakpots
V12119	Line Flush Vessel
V12356	HLW Effluent Discharge Breakpot
V12369	Acidic Effluent Breakpot

1.4 System 220: HLW Pretreatment

V12004A/B	HLW Ultrafiltration Feed Vessels
V12005A/B	HLW Ultrafiltration Pulsepots
V12006A/B/C	HLW Ultrafiltration Permeate Collection Vessels
V12007	HLW Feed Blending Vessel
V12099A/B	HLW Ultrafiltration Pulsepots

1.5 System 230: LAW Ultrafiltration

V12010A/B	Evaporator Concentrate Buffers
V12011A/B	Ultrafiltration Feed Vessels
V12013A/B	Ultrafiltration Pulsepots
V12014A/B	Ultrafiltration Pulsepots
V12015A/B	LAW Permeate Hold Vessels
V12016A/B	Entrained Solids Hold Vessels
V12333A/B	LAW Ultrafiltration Feed Return Breakpots

1.6 System 310: Cesium Removal Using Ion Exchange

C13001-4,11	Cs Ion Exchange Columns
V13001	LAW Feed Tank
V13004	Treated LAW Collection Tank
V13007	Caustic Rinse Tank
V13008	Caustic Rinse Collection Tank
V13022	Cs Reagent Tank

1.7 System 320: Cesium Nitric Acid Recovery

C13005	Rectifier Column
V13024A/B	Cs Eluate Receipt Vessels
V13025	Evaporator Feed Pulsepot
V13026	Evaporator Kettle
V13027A/B	Cs Eluant Vessels
V13028	Recovered Acid Tank
V13029	Process Condensate Pot
V13030	Cs Concentrate Lute Pot
V13054	Offspec Eluant Recycle Breakpot
V13073	Cs & Tc Concentrate Storage Tank
V13074	Breakpot for V13073

1.8 System 540: Vessel Vent

C15001	Caustic Scrubber
C15002A/B	Vessel Vent Organic Adsorber

V15044	Vessel Vent Scrub Collection Vessel
V15048A/B	Vessel Vent HEME
V15301A/B	Vessel Vent HEME Seal pots
V15302A/B	Vessel Vent HEME Seal pots
V15303A/B/C/D	RFD/PJM Seal Pots
V15304A/B/C/D	RFD/PJM HEME
V15305A/B/C/D	RFD/PJM Seal Pots
V15307	VOC Unit Hold Vessel

1.9 System 550: Plant Wash and Effluent Collection

V15001-8, 12, 17	
V15030, 30, 31, 309	
V15310, 312	Breakpots
V15009	Plant Wash Vessel
V15013	Acidic Effluent Vessel
V15018	Contaminated Effluent Vessel

2.0 Law Pre-treatment Building

3.0 LAW Vitrification Building

4.0 HLW Vitrification Building

Please note that the above is an outline example only. The system numbers and the vessels for the LAW pre-treatment, LAW vitrification, and HLW vitrification buildings will be need to be added as well to make the outline complete. Also, only the in-cell vessels and those out-cell vessels that will classify as containing "dangerous waste" will be included in the report.