00 8594

(3) Sta 4 SEP 23 1994

ENGINEERING DATA TRANSMITTAL

Page 1 of 1

1. EDT 150212

2. To: (Receiving Organization)	3. From: (Originating Organization)	4. Related EDT No.:
K Basins - Facility Compliance	ICF Kaiser Hanford Company	N/A
5. Proj./Prog./Dept./Div.:	**6. Cog. Engr.:**	**7. Purchase Order No.:**
N040/K Basins	J. E. Orchard (ICF Kaiser)	N/A

8. Originator Remarks: N/A

9. Equip./Component No.: N/A

10. System/Bldg./Facility: 07/105KW/100K

11. Receiver Remarks:

The attached engineering study is not a design document and does not affect changes to K Basins systems or operations.

It is intended only to support a larger effort by the K Basins Organization to examine the feasibility of irradiated fuel and sludge consolidation in the KW Basin in response to TPA Milestone (target date) M-34-00-T03.

Project N040 is postponed indefinitely and may be deferred to other Spent Nuclear Fuel Project efforts.

12. Major Assm. Dwg. No.: N/A

13. Permit/Permit Application No.: N/A

14. Required Response Date: September 23, 1994

15. DATA TRANSMITTED

(A) Item No.	(B) Document/Drawing No.	(C) Sheet No.	(D) Rev. No.	(E) Title or Description of Data Transmitted	(F) Approval Designator	(G) Reason for Transmittal	(H) Originator Disposition	(I) Receiver Disposition
1	WHC-SD-N040-ES-001	N/A	0	Spent Fuel Consolidation in the 105KW Building Fuel Storage Basin	N/A	1	1	1

16. KEY

Approval Designator (F)	Reason for Transmittal (G)		Disposition (H) & (I)	
E, S, Q, D or N/A (see WHC-CM-3-5, Sec.12.7)	1. Approval 2. Release 3. Information	4. Review 5. Post-Review 6. Dist. (Receipt Acknow. Required)	1. Approved 2. Approved w/comment 3. Disapproved w/comment	4. Reviewed no/comment 5. Reviewed w/comment 6. Receipt acknowledged

17. SIGNATURE/DISTRIBUTION (See Approval Designator for required signatures)

(G) Reason	(H) Disp.	(J) Name	(K) Signature	(L) Date	(M) MSIN	(J) Name	(K) Signature	(L) Date	(M) MSIN	(G) Reason	(H) Disp.
1	/	Cog.Eng. B. H. Johnson	BH	9/16/94	R3-85						
1	/	Cog. Mgr. D. J. Watson		9/16/94	X0-41						
1	/	Cog. Eng. R. G. Gant	RGG	9/19/94	X3-79						
1		CENTRAL FILES			L8-04						
1		OSTI (2)			L8-07						

OCT 1994 RECEIVED EDMC

18.	19.	20.	21. DOE APPROVAL (if required)
B. H. Johnson 9/16/94 Signature of EDT Originator Date	D. J. Watson 9-16-94 Authorized Representative for Receiving Organization Date	D. J. Watson 9-16-94 Cognizant Manager Date	Ctrl. No. ☐ Approved ☐ Approved w/comments ☐ Disapproved w/comments

BD-7400-172-2 (04/94) GEF097

BD-7400-172-1 (02/89)

JKE 9/23/94

SUPPORTING DOCUMENT

1. Total Pages 96 102

2. Title	3. Number	4. Rev No.
Spent Fuel Consolidation in the 105KW Building Fuel Storage Basin	WHC-SD-N040-ES-001	0

5. Key Words

Project N040, Fuel Consolidation, 105KW, Fuel Storage Basin

APPROVED FOR PUBLIC RELEASE

KMB 9/23/94

6. Author

Name: B. H. Johnson

B.H. Johnson

Signature

Organization/Charge Code 7FA20/KK4W4

7. Abstract

This study is one element of a larger engineering study effort by WHC to examine the feasibility of irradiated fuel and sludge consolidation in the KW Basin in response to TPA Milestone (target date) M-34-00-T03.

The study concludes that up to 11,500 fuel storage canisters could be accommodated in the KW Basin with modifications. These modifications would include provisions for multi-tiered canister storage involving the fabrication and installation of new storage racks and installation of additional decay heat removal systems for control of basin water temperature. The ability of existing systems to control radionuclide concentrations in the basin water is examined. The study discusses requirements for spent nuclear fuel inventory given the proposed multi-tiered storage arrangement, the impact of the consolidated mass on the KW Basin structure, and criticality issues associated with multi-tiered storage.

8. PURPOSE AND USE OF DOCUMENT - This document was prepared for use within the U.S. Department of Energy and its contractors. It is to be used only to perform, direct, or integrate work under U.S. Department of Energy contracts. This document is not approved for public release until reviewed.

PATENT STATUS - This document copy, since it is transmitted in advance of patent clearance, is made available in confidence solely for use in performance of work under contracts with the U.S. Department of Energy. This document is not to be published nor its contents otherwise disseminated or used for purposes other than specified above before patent approval for such release or use has been secured, upon request, from the Patent Counsel, U.S. Department of Energy Field Office, Richland, WA.

DISCLAIMER - This report was prepared as an account of work sponsored by an agency of the United States Government. Neither the United States Government nor any agency thereof, nor any of their employees, nor any of their contractors, subcontractors or their employees, makes any warranty, express or implied, or assumes any legal liability or responsibility for the accuracy, completeness, or any third party's use or the results of such use of any information, apparatus, product, or process disclosed, or represents that its use would not infringe privately owned rights. Reference herein to any specific commercial product, process, or service by trade name, trademark, manufacturer, or otherwise, does not necessarily constitute or imply its endorsement, recommendation, or favoring by the United States Government or any agency thereof or its contractors or subcontractors. The views and opinions of authors expressed herein do not necessarily state or reflect those of the United States Government or any agency thereof.

9. Impact Level N/A

10. RELEASE STAMP

OFFICIAL RELEASE BY WHC
DATE SEP 23 1994
STA 4

RELEASE AUTHORIZATION

Document Number:	WHC-SD-N040-ES-001, REV 0
Document Title:	Spent Fuel Consolidation in the 105KW Building Fuel Storage Basin
Release Date:	9/23/94

* * * * * * * * * * * * * *

This document was reviewed following the procedures described in WHC-CM-3-4 and is:

APPROVED FOR PUBLIC RELEASE

* * * * * * * * * * * * * *

WHC Information Release Administration Specialist:

Kara Broz

Kara Broz
(Signature)

9/23/94
(Date)

A-6001-400 (07/94) WEF256

N040ES

ENGINEERING STUDY

FOR

SPENT FUEL CONSOLIDATION IN THE 105KW BUILDING FUEL STORAGE BASIN

PROJECT N-040

Prepared by

ICF Kaiser Hanford Company
Richland, Washington

for

Westinghouse Hanford Company

Wayne Adams	9/16/94	J.R. Buchanan	9-14-94
Principal Lead Engineer	Date	Technical Documents	Date
D Lundgren	9-15-94	S.D. Consort	9/14/94
Safety Engineering	Date	Environmental Engineering	Date
[illegible] 9-15-94		[illegible]	9/16/94
Quality Engineering	Date	Project Manager	Date

Westinghouse Hanford Company

[illegible]	9-16-94
K Basins Facility Compliance	Date

ENGINEERING STUDY

SPENT FUEL CONSOLIDATION IN THE 105KW BUILDING FUEL STORAGE BASIN

PROJECT N-040

Prepared for

Westinghouse Hanford Company

September 1994
(Issue I)

For the U.S. Department of Energy
Contract DE-AC06-93RL12359

Prepared by

ICF Kaiser Hanford Company
Richland, Washington

N040ES

ICF Kaiser Hanford Company

TABLE OF CONTENTS

I. INTRODUCTION 1
A. PURPOSE 1
B. FACILITY DESCRIPTION 2
C. SYSTEM DESCRIPTION 3
1. Canister Storage 3
2. Basin Water Cooling 4
3. Basin Water Treatment and Filtration 5
4. Instrumentation and Inventory Control 6
D. ASSUMPTIONS 7
1. Canister Storage 8
2. Basin Water Cooling 9
3. Basin Water Treatment and Filtration 9
4. Instrumentation and Inventory Control 9

II. SUMMARY AND CONCLUSIONS 10
A. CANISTER STORAGE 10
B. BASIN WATER COOLING 12
C. BASIN WATER TREATMENT 13
D. INSTRUMENTATION AND INVENTORY CONTROL 13
1. Instrumentation 13
2. Inventory Control 13

III. DESCRIPTION OF ALTERNATIVES 15
A. CANISTER STORAGE 15
1. Criteria 15
2. Alternatives Considered - Storage Arrangements and Storage Methods 16
3. Identification of Preferred Arrangement and Method 22
B. COOLING OF BASIN WATER 28
1. Criteria 28
2. Alternatives Considered 31
3. Identification of Preferred Alternative 35
C. WATER FILTRATION AND TREATMENT 36
1. Criteria and Alternatives Considered 36
2. Identification of Preferred Alternative 38
D. INSTRUMENTATION AND INVENTORY CONTROL 39
1. Criteria 39
2. Alternatives Considered 40
3. Identification of Preferred Alternatives 51

IV. REQUIRED CHANGES TO IMPLEMENT PREFERRED ALTERNATIVE 52
A. CANISTER STORAGE 52
B. MECHANICAL 53
C. INSTRUMENTATION AND INVENTORY CONTROL 53

V. CONSTRUCTIBILITY 53
A. CANISTER STORAGE 53
1. Temporary Relocation of Existing Canisters and New Storage . 53
2. Remove Existing Racks 55
3. Place New Rack Modules 59

VI. REFERENCES 60

APPENDICES

Appendix A. Cost Estimate
Appendix B. Calculation Index
Appendix C. Escalation Analysis Schedule
Appendix D. Radionuclides Data
Appendix E. Figures
Appendix F. Sketches

ABBREVIATIONS

ALARA	as low as reasonably achievable
ANSI	American National Standards Institute
CFR	Code of Federal Regulations
DAS	data acquisition system
DOE	U.S. Department of Energy
ECN	Engineering Change Notice
HEM	high enrichment material
HPS	Hanford Plant Standard
LEM	low enrichment material
MBA	material balance areas
mtu	metric ton unit
PUREX	Plutonium Uranium Extraction
ROM	rough order of magnitude
SDC	Standard Design Criteria
SNM	special nuclear material
SPR	single pass reactor
TPA	Tri-Party Agreement
WHC	Westinghouse Hanford Company

ENGINEERING STUDY

SPENT FUEL CONSOLIDATION IN THE 105KW BUILDING FUEL STORAGE BASIN

PROJECT N-040

I. INTRODUCTION

A. PURPOSE

This study was initiated prior to the Spent Nuclear Fuel Project Systems Engineering Baseline Development effort.

DOE, Federal, and State agencies involved with the Hanford Site are concerned about the KE Basin leakage and its effect on the environment. A Hanford Federal Facility Agreement and Consent Order (TPA) milestone, M-34-00-T03, has been established to submit an engineering study for determining the feasibility of moving the irradiated fuel and sludge (once encapsulated) currently stored in the KE Basin to the KW Basin for temporary storage. A TPA target milestone, M-34-00-T08, has been established for removing of all fuel and sludge from both KE and KW Basins in an encapsulated form by December 31, 2002.

This study is one part of a larger WHC engineering study effort to examine the feasibility of irradiated fuel and sludge consolidation in the KW Basin in response to TPA Milestone M-34-00-T03. This study focuses on the facility upgrades associated with consolidated fuel storage in the KW Basin.

Consolidated storage at the KW Basin will create a significant increase in the amount of spent fuel to be stored at that facility. It is projected that this increase will create a subsequent increase in the pool heat loading and

water treatment requirements and may require the modification or reconfiguration of existing facility support systems, including the attendant instruments and controls.

B. FACILITY DESCRIPTION

The 105KE and 105KW Buildings are located near the Columbia River in the 100K Area reactor sites on the northern edge of the Hanford Site.

The 105KE and 105KW Buildings are the main reactor buildings. All levels of these buildings are deactivated except for portions of the ground level which is approximately 30,000 ft^2 associated with the fuel storage basin area. The fuel storage basin and handling areas, some supporting office spaces, the motor control center rooms, and the compressor rooms are still in use.

The 100K Area spent fuel storage basins (K Basins) were built in the early 1950s to receive and provide temporary storage for fuel irradiated in the 105KE and 105KW production reactors awaiting shipment to other Hanford Site processing facilities. The reactors in the 105KE and 105KW Buildings were shut down in 1971 and 1970, respectively, and the K Basins were taken out of service.

In 1972, the PUREX facility in the 200-East Area was shut down. The increasing inventory of irradiated fuel produced at the N Reactor was stored in the N Reactor fuel storage basin (N Basin). The K Basins were later brought back into service to provide temporary storage and handling of irradiated N Reactor fuel. Before the N Reactor fuel service, both basins were modified by projects H-501 (KE Basin) and H-508 (KW Basin). The KE Basin was brought back into service in June 1975 and the KW Basin was restarted in February 1981. Prior to service as a repository for irradiated N Reactor fuel, the KW Basin was drained and cleaned, and the walls and floor were lined with an epoxy coating.

The N Reactor was shut down in 1987. By 1989, all remaining irradiated fuel at the N Reactor fuel storage facility had been shipped to the K Basins for storage.

C. SYSTEM DESCRIPTION

1. Canister Storage

The material to be stored is categorized by physical properties, packaging, and enrichment. The material physical properties are categorized as spent fuel elements and sludge.

The study separates materials into the following levels of enrichment for storage arrangement purposes:

- HEM, as unirradiated U235, with enrichment greater than 0.95 wt%.

- LEM, as unirradiated U235, with enrichment less than or equal to 0.95 wt%. Most of the storage materials are LEM, including the KE Basin sludge.

Following is a list, by source location, weight, and number of canisters of the spent fuel and sludge to be consolidated at the KW Basin. Only encapsulated canisters will be stored in the KW Basin.

- The KW Basin contains 961 metric tons of spent fuel packaged in 3,817 sealed (MK-I and MK-II) canisters (ref 1).

- The KE Basin contains 1,150 metric tons of irradiated fuel and 0.5 metric tons of irradiated SPR fuel in 3,671 open canisters. This fuel is assumed to be repackaged into sealed (MKII)

canisters prior to transfer to the KW Basin for consolidated storage. According to past experience, the repackaging of spent fuel elements requires more canisters than the number of canisters started with. The additional volume is due to damaged and corroding fuel elements. A repackaging factor of 1.05 is used for planning purposes. Therefore, repackaging requires 3,671 canisters * 1.05 = 3,855 canisters.

- The KE Basin also contains an estimated 775 ft^3 (minimum) (ref 2) of sludge, estimated by WHC from observations of the KE Basin. The ratio of water to sludge in situ by volume is estimated to range from 0 to 2. With each canister having a packaging volume of 1.56 ft^3, the minimum number of sludge canisters range from 500 to 1,500 canisters. A minimum of 1,000 sealed canisters of sludge is assumed to be included with the consolidated spent fuel canister inventory.

- The PUREX facility contains 2.9 mtu of irradiated SPR fuel (assumed HEM), which when packaged will require an estimated 30 canisters and 0.5 mtu of irradiated fuel (assumed HEM) which when packaged will require an estimated six sealed (MK-II) canisters.

Based on the number of spent fuel and sludge canisters estimated above, it is assumed that a minimum of 8,750 canisters, rounded up for conservatism, would need to be consolidated at the KW Basin.

2. <u>Basin Water Cooling</u>

The consolidated spent fuel and sludge inventory will be submerged in the KW Basin water. The basin water acts as a heat sink to absorb the decay heat from the canisters. Other sources of absorbed heat include heat generated by operating pumps and the

heat transfer from the surrounding soil. To maintain the basin water at a constant temperature, a water cooling system is necessary to remove the added heat.

The KW Basin has a water cooling system composed of a 200-ton water-cooled chiller and a 60-ton air-cooled condenser with the associated evaporator (ref 3). (See sketch ES-N040-M01. All sketches are located in Appendix F.) The 200-ton water-cooled chiller relies on filtered river water for cooling. The water cooling loop includes 8-in. diameter supply and return piping, two 500-gpm pumps and two 500-gpm capacity filters.

3. Basin Water Treatment and Filtration

The existing water treatment system includes two 500-gpm primary cartridge filters for removal of solids, three ion-exchange columns installed in the basin water cooling loop, and two ion exchange modules installed in the sand filter loop.

The primary filters are installed in parallel in the water cooling loop, and each filter is supplied by a 500-gpm primary circulation pump. These filters are usually run separately using the other as a standby. However, the piping system is capable of handling the operation of both pumps and filters simultaneously for a total capacity of 1,000 gpm. The primary filters are fitted with filter cartridges suitable for the removal of debris as small as 5 μ (microns). The intake and discharge of the primary cooling loop are 3 ft below the surface water level and 13 ft above the pool floor, respectively. Therefore, the primary filters will remove debris and particulates in suspension in the water.

The three ion-exchange columns each have a treatment capacity of 50 gpm each and are installed in parallel for a total capacity of

150 gpm. The water supply is distributed to the ion-exchange columns from a 4-in. supply header and returned to the basin through a 6-in. return header. Individual connections to the resin tanks are 2-in. in diameter (see sketch ES-N040-M01).

The two ion-exchange modules have a water treatment capacity of 160 gpm each and are installed in parallel. However, the piping connections to the modules, the water supply header, and the water return header to and from the modules are all 3-in. in diameter (see sketch ES-N040-M02). Normally, the modules are operated separately, using one as a standby. A 400-gpm skimmer pump circulates basin water through a sand filter. The sand filter discharge is split into two streams: 160 gpm flowing through one ion-exchange module and the remaining 240 gpm flowing back into the basin. The intake to the sand filter system is at the surface of the basin water, therefore, the sand filter system is designed to remove debris floating in the basin, i.e., algae growth.

Solids heavier than water that sink to the bottom of the basin will not be removed by the existing water filters and treatment systems.

4. <u>Instrumentation and Inventory Control</u>

The spent fuel in the 105KW Building is listed as Category II-D SNM in accordance with DOE Order 5633.3A. This classification requires a bimonthly physical inventory of the spent fuel, which requires handling a large number of storage canisters. Alternatives will consider storage arrangements and methods, basin water cooling, water filtration and treatment, an automated inventory system, and an inventory system based on requirements, standards, and practices used in commercial nuclear power plants and on those used for DOE facilities. The inventory system alternatives will be

compared with the requirements of an inventory system based on DOE Order 5633.3A for Category II-D SNM.

D. ASSUMPTIONS

This engineering study is based on the following general assumptions:

- The fuel to be consolidated will be removed from the KW Basin prior to December 2002.

- All the fuel transferred to the KW Basin will be encapsulated in MK-II canisters using existing encapsulation methods and technologies and the fuel currently stored in the KW Basin will remain in their MK-I or MK-II canisters.

- The K Basins Authorization Basis can be revised to support the conclusions of this engineering study.

- The KW Basin and its superstructure is adequate, or readily upgradable, for the consolidated storage.

- Reviewing the KW Basin superstructure is not within the scope of this study.

- The KW Basin will remain sufficiently water-tight for storage and the epoxy finish will withstand the loadings imposed on it by the storage system.

- Formal calculations that substantiate the structural capacity of the KW Basin to withstand the applicable seismic loading criteria will be required before consolidation proceeds. A preliminary assessment of the structural feasibility of spent fuel consolidation at the 105KW Basin was completed by WHC to support this engineering

study (ref 4). The preliminary assessment concluded that consolidation of spent fuel into the 105KW Basin should be considered as a structurally feasible option based on a reduced magnitude seismic event for short-life (<20 years) 100-K Area facilities.

- The maximum KW Basin water depth is limited to 16 ft. Work in the KW Basin to remove the existing racks and to install and/or modify the new fuel storage system will require nuclear divers.

1. Canister Storage

This study uses an anticipated storage life of 5 years. This design life is not a controlling factor for the existing structure or the new storage system. The fuel storage racks are classified as a Safety Class 1 component.

The KE Basin sludge is assumed to be treated as spent fuel, not waste, and its encapsulation methods are the same as for spent fuels (i.e., using MK-II canisters). The minimum number of sludge canisters used for the study is assumed to be 1,000.

The grating floor of the KW Basin is assumed to have adequate live load capacity for normal construction loads but insufficient capacity for transporting the new storage rack modules to their final location. The load capacity of the grating must be evaluated prior to any construction activity.

Mechanical anchorage of the storage structure (i.e., expansion anchors) to the basin is not allowed. For this study, special tooling for canister handling and the existing monorail lifting details is assumed feasible to develop but is not within the project scope.

The construction schedule assumes that temporary canister relocation is not in the critical path.

2. Basin Water Cooling

The cooling system after fuel consolidation will have to remove the total heat decay from the stored fuel, the heat generated by equipment, and the heat gained from the surrounding soil. The cooling system will also be required to provide some extra capacity to lower the basin water temperature by about 1°F/day after it is allowed to rise because of a shutdown for maintenance.

3. Basin Water Treatment and Filtration

The existing water treatment system at the KW Basin is assumed to provide a satisfactory water quality level. The goal of this study is to maintain the present KW Basin water quality after fuel consolidation.

The additional fuel to be stored in the KW Basin is assumed to be similar in nature and stored in similar containers to those currently in the KW Basin.

The existing types and rates of radionuclides generated at KW Basin are extrapolated to account for the total fuel after consolidation on the basis of fuel weight.

4. Instrumentation and Inventory Control

SNM inventories will comply with DOE Order 5633.3A and will be performed on a statistical sampling basis.

One operator and one manager will require approximately 30 minutes to identify, weigh, and return a three canister set in a three-tier rack configuration.

A basic assumption is that DOE is willing to grant a waiver to the bimonthly sampling requirements considering security and safeguards currently or planned to be implemented, as a means of controlling the SNM inventory.

II. SUMMARY AND CONCLUSIONS

A. CANISTER STORAGE

The safety analysis report for the K Basins does not allow storage in the KW Basin except for the floor rack storage currently in use or the rack storage plus the "three-over-one" hanging storage scheme in the east and center bays (ref 5). The criticality analysis on which the current safety analysis is based does not consider the stacking of fuel.

The K Basins safety analysis must be revised to accommodate the proposed consolidated fuel storage alternatives prior to implementation. The study and referenced analysis, including the appropriate criticality analysis, support the feasibility of consolidated fuel storage in the KW Basin.

A minimum of 8,750 canisters (7,750 spent fuel canisters and a minimum of 1,000 sludge canisters, depending on actual sludge volume and packaging methods) will be consolidated for storage at the KW Basin. Storage of larger quantities was also evaluated.

A new multi-tier steel rack module supported by the basin floor is the preferred method to meet the requirements of storage quantity, structural limitations, canister restraint, and canister serviceability/accessibility. The multiple requirements make the rack design sophisticated and will require the development of special canister handling tooling to use the proposed racks. (See sketches ES-N040-S01 through ES-N040-S05 for the proposed preconceptual rack design.)

The arrangement to accommodate the 8,750 minimum canisters will require two-layer storage in two bays and three-layer storage in one bay. Three-layer storage in all three bays will accommodate the maximum possible number of canisters (i.e., 11,500). Storage in the west bay is to be limited to LEMs. Uncertainties of the sludge volume and packaging methods must be resolved before proceeding with a detailed design.

Scoping calculations have been completed that provide a preliminary position on the structural capacity of the KW Basin when subjected to consolidated fuel loading. The preliminary position assumes a reduced - magnitude seismic event for short-life (<20 years) facilities that has been justified for existing structures at 100K Area. Based on the scoping calculations, the proposed fuel consolidation should be considered a structurally feasible option (ref 4).

The KW Basin has been reviewed for the interactions and increased loadings involved in the proposed consolidated storage arrangement and method. The new floor storage racks will interact with the basin at the floor and base of the basin walls. Further study will be required on the existing basin epoxy lining for interaction with the new storage system.

Major construction activities include shop fabrication of the rack modules and shipment to the site, some field assembly work for larger modules, and minor modifications to the existing facilities. The existing racks will be removed and new racks will be installed. The existing building structure will be reviewed and modified as required to support the rack installation. Racks will be brought into and out of the KW Building through existing entrances. Access corridors will be established above the water for rack transportation and final assembly and for cutting, packaging, and decontamination of the existing racks. Nuclear divers will disconnect/cut and remove the existing racks and locate and shim the new rack modules

to the wall structure and connect adjacent rack modules. The racks are Safety Class 1 components.

KW Basin operations must develop procedures to address canister relocation for construction and for new storage. The handling procedures should consider safety concerns and the impact to the construction schedule.

There are 204 contaminated racks and a minimum of 10,000 ft^3 of displaced contaminated water to be treated and disposed of. The location, methods, cost, and schedule for disposal are not in the scope of this study.

The ROM estimated construction cost for spent fuel and sludge consolidation at the KW Basin is $14,000,000. This value does not include waste decontamination and disposal or canister handling.

B. BASIN WATER COOLING

The existing air-cooled condenser/evaporator at the KW Basin does not have the necessary cooling capacity to provide a flexible control of the basin water temperature after fuel consolidation. The preferred alternative to provide the necessary cooling capacity after fuel consolidation is to relocate the 60-ton air-cooled condenser/evaporator at the KE Basin once the spent fuel is moved to the KW Basin. If the existing 200-ton water-cooled chiller unit cannot be used for the construction period, it may be necessary to purchase a new 50-ton unit in place of the existing KE Basin unit.

The ROM estimated construction cost for this alternative is $100,000.

C. BASIN WATER TREATMENT

The existing ion exchangers can maintain the present residual concentration of radionuclides in the water if the water temperature is managed accordingly. The generation rate of radionuclides increases rapidly with the basin water temperature. By maintaining a low basin water temperature, the rate of replacing resin beds required to be handled as contaminated waste is reduced. The preferred alternative for basin water treatment is to maintain a low basin temperature and utilize the existing water treatment system.

D. INSTRUMENTATION AND INVENTORY CONTROL

1. Instrumentation

A review of the KW Basin spent fuel storage design and associated safety analysis revealed no relationship between the amount of spent fuel stored in the basins and an increase in the quantity of instruments needed to monitor the required facility parameters. Additional instrumentation may be required to support proposed equipment additions and modifications associated with pool temperature control and basin water cleanup.

The instrumentation required to support proposed system changes is relatively minor in scope and insignificant in cost. The instrumentation required for each equipment change will be included with the equipment. The estimated cost of instrumentation will be included with the cost of the associated major equipment.

2. Inventory Control

Physical inventory of the spent fuel stored in the 105KW Building will require more time and effort to comply with DOE Order 5633.3A for the Category II-D SNM. This will require bimonthly movement of approximately 10% (statistical sample) of the estimated stored

canisters in the facility (8,750 to 11,500 after consolidation). The concept of automating the inventory by using instrumentation has many disadvantages. Although it would alleviate the need to move the spent fuel during inventory, the instrumentation would be located underwater and would require multiple sensors for each canister. The instrumentation would be difficult to maintain, functional test, and calibrate, and the entire system would be expensive.

Deviation from DOE Order 5633.3A requirements is the preferred option. Neither the option to comply with DOE Order 5633.3A physical inventory requirements for Category II-D SNM or the option to automate the spent fuel pool with instrumentation are the most attractive options. Although a deviation requires DOE approval, there is justification in DOE Order 5633.3A for deviation from inventory frequency requirements for inventories containing a large number of items. A deviation would provide the relief from the bimonthly physical inventory requirements. However, the physical inventory requirement is only one aspect of the detection and assessment process associated with SNM storage. Safeguards requirements interface with facility physical protection and other organizational systems to provide a graded level of protection for stored SNM. Instrumentation enhancements to the physical protection system associated with the KW Basin spent fuel storage may provide the impetus that allows relief from the stringent Category II-D designation physical inventory requirements.

III. DESCRIPTION OF ALTERNATIVES

A. CANISTER STORAGE

1. Criteria

The storage arrangements will include alternatives meeting the minimum and maximum storage requirements to accommodate the uncertain number of sludge canisters. When calculating storage capacity, a factor of 0.97 of the full density storage is applied to allow for spare stations and to provide operational flexibility. The west bay will store LEM only with hanging storage prohibited.

Two shielding criteria limit storage height:

- Handling one canister at a time with full-time access; the required minimum shielding water depth is 8.0 ft based on 5 ft of water above the handled canister at 0.2 mr/hr from the spent fuel (ref 6).

- Using the K Basin fuel canister handling procedure; the minimum shielding water depth is 13.0 ft based on 10 ft of water above the handled canister (ref 7).

NOTE: The shielding water depth is the minimum water depth from the water surface to the top of the canister array. The canister handling height requires 3 ft above the static array. Canister handling is required for inventory, canister repair, canister integrity surveillance, and construction.

The multi-tier storage has less water shielding above the top tier than does single-layer storage.

The first criterion is used to plan the basin storage. (The KW Basin handling procedure that allows handling three canisters at a time will require revision.)

Criticality is not a concern, using Mark II canisters, for the arrangement of storage canisters that contain LEM or HEM provided the fuel remains within the canisters under accident conditions. A previous criticality analysis and another analysis performed to support this study conclude that there is no criticality limitation for stacking fuel canisters (ref 9 and 10).

The KW Basin dimensions and water depths are shown on sketch ES-N040-S01. The basin walls have structural capacity limitations that restrict the water depth in the basin (ref 8). A basin water depth of 16 ft, after fuel consolidation, is used to plan for storage. The basin is a Safety Class 1 structure.

There will be an increase in water depth due to displacement by the additional canisters. The displaced basin water volume ranges from 10,000 to 14,000 ft^3, or an equivalent basin water level increase of 1.2 to 1.7 ft. To maintain the water level at the designated depth, the surplus water must be disposed of. The surplus water may be relocated to the KE Basin; however, water disposal is not in the scope of this study.

2. Alternatives Considered - Storage Arrangements and Storage Methods

Canister Storage Arrangements

The development of alternative arrangements considers the arrangement of canister layers to provide minimum and maximum storage capacities by hanging storage and basin floor storage.

Uniform allocation of fuel canisters and sludge canisters was used to plan the storage. Since the entire basin inventory is LEM, it is evident that there are enough LEM canisters to occupy the west bay of the KW Basin. Considerations in the rack design options are the use of steel or concrete racks, canister station sizes, accessibility to handle and monitor canisters, and whether to elevate or stack the canisters.

Three storage arrangements are considered. Arrangement 1 is varying layer arrangements using floor-supported steel racks. Arrangement 2 consists of a combination of steel rack floor storage and roof hanging storage. Arrangement 3 utilizes new steel floor racks in conjunction with relocating the existing boron concrete cubicles from N Reactor basin. (See Appendix B for storage capacity calculations.)

- Storage Arrangement 1

  Storage racks are steel for floor storage with station size of 21 by 12.5 in. Canisters are stacked or elevated. (See sketch ES-N040-S01 for rack arrangement and sketches ES-N040-S02 through ES-N040-S05 for rack module design.)

  - Arrangement 1A: Two layers in the east or west and middle bays plus three layers in the remaining bay. Capacity: 8,961 canisters (1,211 being sludge canisters).

  - Arrangement 1B: Three layers in three bays. Capacity: 11,547 canisters (3,797 being sludge canisters).

— Arrangement 1C: Existing one layer in the east or west bay plus three layers in the two remaining bays. Capacity: 9,000 canisters (1,250 being sludge canisters).

- **Storage Arrangement 2**

  This arrangement consists of steel rack floor storage combined with hanging storage. (See Appendix E for sketches of the hanging storage. The sketches are from reference 5, and revised as noted to be used for planning this storage arrangement). A review for adequacy of the existing superstructure is not in the scope of this study. The superstructure and associated monorail support structures have been used previously to support hanging canister storage.

  — Arrangement 2: Two layers of floor storage in three bays plus one layer of hanging storage in two bays; hanging storage is prohibited in the west bay (ref 5). Capacity: 8,513 canisters which is less than the 8,750 minimum required (763 being sludge canisters).

- **Storage Arrangement 3**

  This arrangement relocates and installs 1,000 existing boron concrete cubicles from N Reactor basin to the west bay and provides additional new steel racks in a two-tier configuration in the remaining bays. See Appendix E for sketches of the concrete cubicles. Capacity: 9,698 canisters (1,948 being sludge canisters).

Canister Storage Methods

The Mark II canister design consists of two stainless steel barrels approximately 8-in. in diameter by 29-in. high, connected together by a tie tube. See Appendix E for canister sketch and dimensions.

The supporting rack configuration will provide adequate access to retrieve and replace canisters for repair or replacement and will meet inventory and routine canister integrity surveillance activity requirements. The rack configuration will restrain the canisters to prevent damage to the canisters and the existing facility during a design basis earthquake. The supporting racks are classified as Safety Class 1 components. The racks will maintain geometric spacing between the canisters as a nuclear criticality safety control.

All spent fuel and sludge is planned to be removed from the KW Basin by December 2002. Currently, there is no plan to reuse the racks after removal of the stored fuel and sludge; therefore, the required structural life of the racks is 5 years assuming construction starts in 1997.

Three storage methods are considered in this study: floor mounted steel racks, roof/monorail supported canister hangers, and using the existing boron concrete cubicles from N Reactor basin.

- **Method A: Floor-Mounted Steel Racks**

  The rack is a moment-resisting frame structure. Each module is analyzed to resist the design loads (including seismic loads) independently. The modules may be interlocked to form a continuous unit across the bay floor to further resist seismic forces. The racks interact with the basin by receiving support from the floor and horizontal restraint from the wall base but are not mechanically anchored to the basin floor or walls. The

water viscosity provides damping for seismic forces. The water also serves as a counterbalance to the overturning of the rack module in a seismic load case. A preconceptual design for a three-tier rack module for three-layer storage is shown on sketches ES-N040-S02 through ES-N040-S05.

The canister station space requirement is 21 by 12.5 in. There is an average 1-in. clear distance on each side between the rack framing and canister cover locking bar. The larger space allowance is necessary to prevent damage to the canister cap seal during vertical canister handling. The rack provides a 1-3/4-in. clear space at the gas trap for inserting a monitoring instrument at the gas trap for underwater canister integrity surveillance. Canister integrity surveillance, considering the small clearance and multi-tier storage arrangement, is uncertain.

Seismic restrainers are designed to hold canisters at four points at 45 degrees to the canister barrels principal axis to clear its cover hold bar. The four corners of the restrainer tube at the top and bottom are chamfered for easy vertical positioning of the canister. The restrainers bear at the canister base and at the reinforcing band at the top of each barrel.

Several options are available for the vertical support of the canisters within the rack itself. These options do not affect the evaluation of decisions for the rack alternatives, however, they are presented here for future consideration for the design of steel racks.

— Direct canister stacking: Upper canisters are supported by the canisters below with a removable supporting

plate between the upper and lower canisters. The lower canisters should be qualified as Safety Class 1 components, as they would be relied upon to support the canister above, or a waiver should be obtained from DOE to use this option.

— Support by the rack structure: Canisters are supported at each tier by removable steel grating supported by the rack structure.

NOTE: The removable plate or grating allows the lower layer canisters in a multiple layer storage configuration to be retrieved.

Building a prototype of the rack design to test and review the serviceability of the canisters when in the racks is recommended. The preconceptual design of the three-tier rack module is applicable to the two-tier module for two-layer storage.

- **Method B: Superstructure/Monorail Supported Canister Hangers**
  Canisters can be hung from the superstructure/monorail system (see conceptual sketches in Appendix F). Reference 5 describes hanging canister storage.

- **Method C: Using the Existing Boron Concrete Cubicles**
  The existing concrete cubicles in N Reactor basin could be relocated and reused in the KW Basin for consolidated canister storage. (See Appendix F for sketches of the concrete cubicle.) The stations are modular arrays of cubicles formed by boron concrete posts and four sidewall panels. The station

space is 24 by 14 by 108 in. and provides three-layer storage in the existing configuration at N Reactor.

3. Identification of Preferred Arrangement and Method

a. Evaluation of Storage Arrangements

The evaluation criteria include adequate capacity to meet the minimum and maximum storage requirements, constructibility, cost and schedule, water shielding requirements, and impacts to existing facilities (including basin, basin super structure, and auxiliary systems), structural design and serviceability of the new racks. There is no decommissioning requirement considered, and the anticipated life extension of the storage system is 5 years assuming construction starts in 1997.

- Arrangements 1A and 1C

  — Advantages

  Both arrangements meet the minimum storage requirement. The steel racks are designed and shop fabricated as modules and are shipped to the site for installation and final assembly. See Section V for a constructibility evaluation.

  A preliminary evaluation for structural feasibility concludes that the KW Basin is structurally adequate for this storage arrangement assuming a reduced magnitude seismic event (ref 4).

  Based on preliminary design, the steel rack modules are adequate for consolidating fuel

storage. (See the evaluation of the canister storage methods.)

— Disadvantages

Arrangement 1C is more economical than Arrangement 1A, however, the remaining one bay of existing racks would need to be reviewed for structural adequacy and compatibility with the new racks.

- Arrangement 1B

Arrangement 1B has the same attributes as Arrangements 1A and 1C with the exception that it also accommodates the maximum storage requirement. (See the evaluation of the canister storage methods.)

Estimated Construction Cost: $14.1 million, based on Arrangement 1B (see Appendix A).

Schedule: 1 year

- Arrangement 2

— Disadvantages

This arrangement has storage capacity for 237 canisters less than the minimum required, however, it is presented for conceptual and comparison purposes. The storage density of hangers is less than one tier of the floor racks. Installation of the hanger system would involve modifications to the existing monorail system.

The hanging method is structurally undesirable and not technically recommendable according to the evaluation of storage methods noted later in this study. The building and attached monorail system should be analyzed and qualified as a Safety Class 1 structure to provide hanging canister support.

The conjunct floor rack for this arrangement is similar to Arrangement 1. (See the evaluation of the canister storage methods.)

- Arrangement 3

  — **Advantages**

  The storage capacity of this arrangement meets the minimum storage requirements. The west bay of the existing steel rack storage is replaced by concrete cubicles. The advantage to reusing the concrete cubicles is that the cubicles are available from N Basin and waste would be minimized by recycling them.

  — **Disadvantages**

  The cubicles are overqualified for storage of low enrichment canisters. Cubicles add significant weight and seismic loading to the basin which limits canister storage to two layers in two bays and two-layer cubicle storage in the west bay. (The arrangement is not critical.)

Construction would include unbolting and removing the units from N Basin, and cleaning, decontaminating, and relocating the cubicles to the KW Basin.

The conjunct floor steel racks in the other two bays are the same as Arrangement 1. (See the evaluation of the canister storage methods.)

b. Evaluation of Canister Storage Methods

- **Method A: Floor-Mounted Steel Racks**
  The steel rack layout is structurally feasible and the design is flexible to accommodate either a two- or three-tier configuration. From a service/accessibility view point, it meets the handling requirements and provides reasonable water circulation; however, the ability to perform canister integrity surveillance if it becomes required is uncertain.

  Constructibility: The units can be fabricated in parallel with the schedule of basin preparation and diver work can be controlled and limited by design and construction methods. (See Section V for constructibility descriptions.)

- **Method B: Superstructure/Monorail Supported Canister Hangers**
  The superstructure/monorail supported hanger system is structurally undesirable because the superstructure has marginal additional capacity and would have to be qualified as a Safety Class 1 structure. The hung canisters

would interfere with access to the canisters stored in the two-tier, floor-supported steel racks. This combination storage method is not recommended.

Neither constructibility nor costs were studied for this alternative because of the few attributes to this system.

- **Method C: Using Existing Boron Concrete Cubicles**
  The existing concrete cubicles displace a large quantity of basin water that would require more treatment than the other alternatives and would reduce the recovery time from a loss of water in the basin. Although the cubicles appear to be structurally adequate, they would impose a larger seismic demand on the existing basin than the other alternatives. The sketches in Appendix F indicate that there are concrete restraining tongues at the four corners of the cubicle to restrain the canisters. However, restraining tongues may not actually exist, thus, additional seismic upgrades to the cubicles would be required. Serviceability/accessibility of the canisters is adequate. Water circulation is reduced with the use of the cubicles, however, circulation is not deemed a problem.

  Installation of the cubicles will require more work by divers to disassemble and reassemble and some damage to the units can be expected. The cubicles will have a lot of residual surface contamination. Because exposure of workers is required to remove the cubicles, this is not the best method considering ALARA concerns. This storage method is not recommended. There are no fabrication costs associated with this method.

The concrete cubicles are not under the cognizance of K Basin management. Therefore, the coordination of cubicle removal from N Basin, decontamination, and installation in the KW Basin would be difficult.

c. **Preferred Arrangement and Method**

- **Storage Arrangement**
  Arrangements 1A, 1B, or 1C or their combinations by varying the number of two- and three-tier floor-mounted rack modules in the arrangement, is the preferred storage arrangement. The three-tier modules are more economical than two-tier modules from a storage capacity consideration. However, two-tier storage is preferred for safety and operation aspects. The actual number of canisters will dictate the choice.

- **Canister Storage Methods**
  The floor-mounted steel rack, Method A, is the preferred method based on flexibility of design and arrangement, accessibility for maintenance and surveillance, and considering that the racks can be fabricated offsite in parallel with basin preparation.

d. **Uncertainties**

The maximum number of sludge canisters is unknown.

The effects of the steel storage racks, full of canisters, on the KW Basin epoxy coating is an uncertainty that is out of the scope of this study, but requires further investigation.

The disposal method and location for the displaced water from the additional canisters (approximately 10,000 to 14,000 ft^3) needs to be addressed.

Special handling tooling will have to be designed for manipulating the fuel in the storage racks. This tooling configuration is an uncertainty but must be designed and fabricated prior to rack final design and construction.

The ability of the storage racks to support canister integrity surveillance is uncertain.

The safety analysis report and operations safety requirements for the KE and KW Basins limit the west bay to storage of LEM only and prohibits hanging storage in the west bay. These requirements should be reviewed and revised, if necessary, to accommodate the consolidated inventory of spent fuel and sludge canisters.

B. COOLING OF BASIN WATER

1. Criteria

The study of the cooling system is based on the following criteria.

The water cooling load includes the heat added by radioactive decay, by operating equipment, and by conduction or convection from the surrounding environment.

The system will also provide for transient cooling (lowering the basin water temperature to minimize radionuclide emissions, lowering temperature after a cooling system shut down, etc). The required transient cooling capacity depends on the desired cooling speed. A

1°F minimum transient temperature drop per day of the basin water is assumed.

The temperature to be maintained in the basin is an operational decision. Therefore, water temperature could be lowered to reduce evaporation and/or reduce radionuclide emissions.

The heat from radioactive decay as of January 1998 will be 68 kW from fuel at the KW Basin and 51 kW from fuel at the KE Basin (ref 11). The heat decay from PUREX and other fuel is estimated on a unit weight basis using fuel at the KW Basin as a standard. The total heat decay after January 1, 1998 and after fuel consolidation is estimated to be 119 kW or 406,700 Btu/hr. A recent study indicates that the heat decay may be about 6 tons (72,000 Btu/hr) higher (ref 12).

The equipment contributing to the heat in the basin water includes a 25-hp main circulation pump, a 30-hp skimmer pump, and 50% of the existing installed sump pumps (about 5.5 hp). The total heat from equipment is 154,200 Btu/hr.

The heat exchange between basin water and the surrounding soil depends on the soil temperature and the basin operating temperature. The soil temperature is assumed to vary between 60 and 70°F. The maximum heat gain from the soil at a water temperature of 42°F and a soil temperature of 70°F is estimated to be about 15,000 Btu/hr (see Appendix B for calculation index).

Heat loss by evaporation at the surface of the water depends on the water temperature, the relative humidity in the air above the basin walls, and the basin wall height above the water surface. In the summer, the air temperature above the grating will be higher than

the 60°F basin water temperature. Therefore, the air close to the water surface is cooler than the air above the basin walls, and the air layer inside the basin is still. Any migration of water vapor from the water surface to the space above the basin walls is due to diffusion only, and will have to follow the laws of water vapor diffusion through still air. Under these circumstances, the heat loss by evaporation from the basin water is found to be negligible in the operating water temperature range of 42 to 65°F.

Uncertainties include a 6-ton (72,000 Btu/hr) variation in the heat decay estimate, a nonuniform basin temperature, temporary maintenance or operational activities in the basin, improper operation of pumps, and fouling of heat transfer surfaces. A 20% contingency is added to the cost estimate to allow for these uncertainties.

The cooling equipment will be sized to provide the necessary cooling using air-cooled condensers operating at 115°F outdoor air temperature in accordance with HPS, SDC 5.1.

The cooling capacity required to remove the heat added to the basin under normal operating conditions and to provide for a transient cooling of 1°F/day is estimated at 82 tons. The existing 60-ton nominal capacity air-cooled condenser/evaporator can deliver only 46 tons of cooling to the water to comply with HPS design requirements (ref 13). Additional equipment capable of delivering at least 37 tons of cooling to the water will have to be provided. Alternatives to provide the extra cooling are considered.

2. Alternatives Considered

Alternative 1: 200-ton Water-Cooled Chiller

The existing 200-ton water-cooled chiller would be used on an as-needed basis to supplement the existing air-cooled condenser system. By running primarily the 60-ton nominal capacity air-cooled condenser, the maximum expected temperature rise in the basin water is about 0.5°F/day. The operating controls would be to run the existing air-cooled condenser on a continuous basis, then switch to the 200-ton chiller when the basin water temperature rises 1.5°F above an average set point, and shut it down when the water temperature drops 1.5°F below the average set point.

- Advantages

  The equipment already exists. No new work is necessary except for some start/stop control retrofit.

  The capacity is higher than the minimum required, therefore, it can provide faster transient cooling. The 200-ton unit has enough capacity for transient cooling to drop the basin water temperature by about 5°F/day. This rapid transient cooling may be helpful to control the radionuclide emissions that may be generated by leaking fuel canisters.

  This type of chiller is made for heavy-duty industrial applications and is very reliable.

  The chiller will operate on an intermittent basis, using the basin water ability to store cooling in the form of low temperature, therefore, it can be serviced and maintained easily during off periods. The 200-ton chiller will need to

operate only about 14 hours every 3 days, if a 3°F temperature fluctuation is allowed in the basin water.

- **Disadvantages**

  Filtered river water is required for cooling the condenser. This generates some thermal pollution by discharging warmer water back to the river. It also requires that river water supply pumps be operating, therefore, increasing the cost of operation. The 60-ton nominal capacity air-cooled condenser was provided to eliminate the need for filtered river water.

  To achieve low basin water temperature, it will be necessary to run both basin water circulation pumps in parallel to avoid discharge water temperatures close to freezing.

  The 200-ton chiller requires dedicated electrical power. This power will be available for other applications if the 200-ton chiller is completely eliminated.

  The R-11 refrigerant used in the 200-ton chiller is a chlorofluorocarbon (CFC) that may not be available when this project would be implemented.

  The life expectancy of the 200-ton chiller is uncertain.

Alternative 2: New Air-Cooled Condenser and Evaporator

A new air-cooled condenser and evaporator would provide the additional minimum cooling of 37 tons at 115°F outdoor air temperature. This equipment will be installed in parallel with the existing air-cooled condenser system at the KW Basin and will cool a portion of the 500 gpm flow circulated by one pump. A 50-ton

cooling capacity Air-Conditioning and Refrigeration Institute rated condenser will be required to deliver 37 tons of cooling to the water.

Power required for the new unit will be provided by the existing switchgear in electrical equipment room 1, cubicle "C3" spare feeder.

Conduit routing from the switchgear electrical equipment room 1 to the new equipment is approximately 500 ft, and will require penetration of a 3-ft thick concrete wall. This method will provide redundant power when maintenance work is required on the switchgear feeder currently being used. The conduit will be 2-1/2 inch diameter with four 1/0 cables.

- **Advantages**

  Filtered river water is not required for cooling.

  Under favorable conditions of low outside air temperature and no transient cooling requirement, the existing 60-ton nominal capacity cooling system may be sufficient to provide the necessary cooling. Therefore, the new 37-ton cooling system will be used as a standby when not needed.

- **Disadvantages**

  Only a minimum transient cooling of about 1°F/day is provided.

  A new air-cooled condenser, evaporator, and interconnections are required.

  Providing new equipment would be costly.

The cost of Alternative 2 is estimated at $500,000.

Alternative 3: Relocate the Existing 60-ton Unit from the KE Basin to the KW Basin

The 60-ton nominal capacity air-cooled condenser/evaporator at the KE Basin would be relocated to the KW Basin after fuel consolidation. This would require the relocation of the fuel first, therefore, it may be necessary to run the 200-ton water-cooled chiller during the construction phase.

The relocated air-cooled condenser/evaporator and the existing one have similar cooling capacity and will be installed in parallel.

Power required for the new unit will be provided by the existing switchgear in electrical equipment room 1, cubicle "C3" spare feeder.

Conduit routing from the switchgear electrical equipment room 1 to the new equipment is approximately 500 ft, and will require penetration of a 3-ft thick concrete wall. This method will provide redundant power when maintenance work is required on the switchgear feeder currently being used. The conduit will be 2-1/2 inch diameter with four 1/0 cables.

- **Advantages**

  Existing equipment would be used.

  The evaporator at the KE Basin has contaminated water flowing through it and may be contaminated. The need to dispose of the evaporator as a contaminated item is eliminated if it is relocated to the KW Basin.

  Under favorable outdoor temperatures, one 60-ton system will be operating while the other can be used as standby.

- Disadvantages

  The equipment cannot be moved from the KE Basin to the KW Basin before the fuel is relocated. Therefore, the 200-ton water-cooled chiller may be required to run during the construction phase.

  When project N-040 is implemented, the air-cooled condenser and the evaporator would be approximately 10 years old, corresponding to about half the life expectancy.

The cost of this alternative is estimated at $100,000.

3. Identification of Preferred Alternative

Alternative 3 is the preferred cooling alternative. It does not require river water for cooling as Alternative 1 does, it uses R-22 refrigerant instead of the highly regulated CFC R11 used by Alternative 1, and it is the only alternative that recycles the contaminated evaporator of the KE Basin. The cost of Alternative 3 is approximately $400,000 less than Alternative 2.

Uncertainties

The uncertainties associated with the preferred alternative include the following:

- Usability of the existing 200-ton water-cooled chiller during the construction period and the fuel transfer.

- The sufficiency of the useful life remaining for the existing water cooling equipment.

- A 6-ton variation in the heat decay estimate, a nonuniform basin temperature, temporary maintenance or operational

activities in the basin, improper operation of pumps, and fouling of heat transfer surfaces.

A 20% contingency is added to the cost estimate to allow for these uncertainties.

C. WATER FILTRATION AND TREATMENT

1. Criteria and Alternatives Considered

Water Filtration

The two existing primary filters are operated separately. Since the existing piping and pumps can handle the operation of both filters at the same time, new primary filters are not required. Any increase in filtration requirements can be addressed by running both filters when needed, and by replacing filter elements as necessary.

The primary function of the existing sand filter is to remove floating solids. These solids are a function of temperature, pH, dissolved oxygen, and outside sources, and are not expected to increase with additional fuel in the basin. Therefore, no new sand filter is required.

Water Treatment

The study of the water treatment for the removal of radionuclides after fuel consolidation is based on the following criteria.

The existing water treatment systems in the KW Basin provide satisfactory water quality level for the existing storage conditions when operating normally. A 2-year basin operation history shows that the residual concentration of Cs-137 radionuclides in the basin water can be as low as 0.05 μCi/L (micro curies per liter), and the

concentration of Sr-90 radionuclides can be negligible (see Appendix D-1).

All N Reactor fuels that will be consolidated into the KW Basin are considered to be similar in nature to the fuel presently stored in the KW Basin. Therefore, no new contaminants are anticipated that would require a different type of water treatment.

All new fuels consolidated into the KW Basin will be stored inside sealed canisters similar to the canisters presently at the KW Basin. It is assumed that the additional fuel will increase the rate of generation of radionuclides in proportion to the weight of fuel added. It is also assumed that the temperature dependence of the radionuclide release rate of the additional encapsulated fuel is similar to that of the fuel presently at the KW Basin (see Appendix D-3).

The desired residual concentration to be achieved after fuel consolidation is not defined. It is assumed that the present best achievable Cs-137 residual concentration of 0.05 to 0.1 μCi/liter as shown by the 2-year historical data is satisfactory under normal operating conditions, with 0.20 μCi/liter acceptable on a temporary basis when servicing a section of the water treatment system.

The ion-exchange resins will be replaced regularly to maintain a minimum 90% ion removal efficiency (see Appendix D-2). (This means that the ion-exchange resins will remove at least 90% of all the radionuclides in the incoming water.) It is assumed that the existing resin beds are designed to match the existing water flow to provide optimum ion removal. Therefore, the water flow through the ion exchangers cannot be modified.

The ion exchangers will have some extra water treatment capacity to decrease the concentration of radionuclides to a desired level after it has been allowed to rise. This is a transient water treatment load.

Demineralized make-up water is added on an as-needed basis. The existing methods and equipment are assumed to be satisfactory to handle the KW Basin after fuel consolidation.

2. Identification of Preferred Alternative

a. Evaluation of Alternatives

The resulting residual concentration of Cs-137 radionuclides inside the KW Basin after fuel consolidation is shown in Table 1. (The table is derived from calculation N-040-H-02.)

TABLE 1

RESIDUAL CONCENTRATIONS OF Cs-137 THAT EXISTING EQUIPMENT CAN MAINTAIN					
Basin water temperature °F	45	50	55	60	65
μCi/liter at flow = 310 gpm present operating capacity	0.016	0.051	0.078	0.113	0.142
μCi/liter at flow = 470 gpm present installed capacity	0.01	0.03	0.051	0.075	0.09
μCi/liter at flow = 160 gpm part of equipment in service	0.03	0.1	0.16	0.22	0.28

With the existing water treatment operating capacity of 310 gpm, the basin water temperature should be maintained at or below 58°F to achieve a residual stable concentration of 0.1 μCi/liter of basin water. The ion exchange modules system has been recently retrofitted to make it possible to

operate both modules at the same time, for a total maximum, water treatment capacity of 470 gpm.

With the existing water treatment capacity of 470 gpm, the basin water temperature should be maintained at or below 66°F to achieve a residual stable concentration of 0.1 μCi/liter.

When the ion-exchange modules or the ion-exchange columns are out of service, the remaining water treatment capacity is either 150 or 160 gpm, and the basin water temperature should be maintained at or below 50°F to achieve 0.1 μCi/liter.

b. **Preferred Alternative**

The preferred option is to maintain the basin water temperature in the range of 50 to 60°F and use the existing installed water treatment equipment to maintain the desired level of radionuclides concentration. In this temperature range, the generation of radionuclides is low, minimizing the number of ion-exchange elements that need to be handled as contaminated waste.

D. INSTRUMENTATION AND INVENTORY CONTROL

1. Criteria

- There are no instrumentation changes required due to an increase in the 105 KW Basin fuel inventory.

Instrumentation changes associated with proposed modifications to water cooling are insignificant, have a low cost, and are included with the equipment changes.

- Examine the methodology for satisfying DOE Order 5633.3A Category II SNM bimonthly inventory requirements.

- Develop and evaluate alternatives for material inventory required by DOE Order 5633.3A. The three alternatives chosen were the viable options available for SNM inventory.

2. Alternatives Considered

a. Alternative 1: Compliance with DOE Order 5633.3A Bimonthly Requirements

Alternative 1 proposes compliance with DOE Order 5633.3A requirements for a bimonthly physical inventory relating to other aspects of the fuel consolidation proposal (e.g., storage rack configuration). Alternative 1 forms a basis for comparison with the other two alternatives which may require deviation approval by DOE for implementation.

The process of spent fuel storage consolidation at the KW Basin will require a three-tier storage rack design to accommodate a minimum estimated 8,750 canisters (1,000 sludge) and a maximum capacity of 11,500 canisters of spent fuel and sludge. Since the SNM associated with the spent fuel is classified as Category II-D, bimonthly physical inventory is required to comply with DOE Order 5633.3A. Alternative 1 also assumes that the bimonthly physical inventory will be based on a statistical inventory. Currently, MBA 107 (KW Basin) and 108 (KE Basin) are listed in

WHC-CM-4-35, Section 1.1, as statistically based inventories and are assumed to remain so after consolidation.

An estimated 10% canister sample will need to be taken every 2 months to meet DOE Order 5633.3A requirements. Approximately 875 to 1,155 canisters would be removed from their storage racks for verification. Inventory verification will require confirmative measurements to be taken on each canister. The most convenient confirmation measurements available are the attribute measurements of location, identification number, and gross weight listed in WHC-CM-4-35, Section 1.1. Separately, each attribute measurement does not validate acceptability or unacceptibility, but in conjunction with other attributes ensures integrity of an item or area (ref 14). These attributes will need to be taken and recorded during initial consolidation to form the data baseline with which subsequent measurements can be compared for inventory verification.

The potential to measure other attributes and variables for inventory verification exists. The variable measurements of neutron emission and specific gamma activity have the potential to provide quantitative information regarding the validity for inventory verification (ref 14). Radiation detection probes have been used in the tank farm environment to help with characterization. The development of a probe consisting of a gamma detector to measure the presence of fission products and a neutron detector to measure the presence of plutonium may provide an optional sampling technique for inventory verification.

- Advantages

  The requirements of this inventory alternative already exist in the associated site procedures.

  The statistical sample used for inventory could include the three canister sets located above and below each other in the three-tier storage rack. This would preclude having to unnecessarily move canisters located above those required to be verified for inventory.

  Canister inventory and subsequent movement can be accomplished without major changes to existing hoisting equipment.

- Disadvantages

  The obvious disadvantage is the potential amount of canisters that would need to be handled during each inventory period. It will take an estimated 30 minutes to identify, weigh, and return the three canister sets to storage. This does not include the removal/replacement of canister base plates. The time impact of base plate manipulation can be minimized during definitive design. One operator and the manager in charge of inventory would perform the inventory and complete the paper work. This equates to 1 manhour per canister set, or approximately 300 to 360 manhours (based on 10% sample) required to complete one bimonthly inventory for the estimated 8,750 to 11,500 canisters to be stored in the KW Basin.

  An inventory requiring 300 to 360 manhours bimonthly cannot be completed under current conditions. The

three-tier storage of spent fuel canisters would require approximately 7 ft of height (see sketch ES-N040-S03). With a basin water depth of 16 ft, this would leave approximately 9 ft of water above the top layer of stored canisters for shielding. Canister movement is limited to one canister at a time for full-time access with a minimum shielding water depth of 8 ft (ref 6).

- **Principal Hazards and Risks**

The radiation exposure from the inventory activities of the spent fuel stored in the basin will increase in direct proportion to the increase in frequency and statistical sample size. The consolidation of fuel and subsequent bimonthly inventory will reduce the parameter margins, time, distance, and shielding associated with the ALARA concept. More time will be spent during the inventory activity. The spent fuel will be stored closer to basin water surface because of the three-tier storage rack arrangement. The canister will need to be lifted above the rack and left suspended or moved to a temporary location to provide access to the lower level canisters. Current administrative controls on canister handling and physical limitation on the hoisting equipment will need to be modified to accommodate this activity.

An increased risk of canister damage is associated with the large number of canisters to be inventoried. Two-thirds of these canisters will need to be lifted out of the racks from the lower levels.

b. **Alternative 2: Automate Fuel Inventory with Instrumentation**

Alternative 2 would use instrumentation to indicate the attribute measurements required for inventory verification. Piece count and gross weight are two attributes listed in WHC-CM-4-35, Section 1.1 that could most readily be measured by instruments. Instrumentation would be incorporated into the rack design. Gross weight measurements would be taken using load cells. These load cells would be built into the load bearing members of each rack. Since each rack is a module containing multiple canisters, the load cells would indicate the bulk module weight. The load cells would be connected to a DAS which would be configured to provide bulk module weight. Piece count would be achieved using proximity switches. Proximity switches would be mounted on the rack at each canister location to monitor the presence of the canister. The DAS would indicate the presence of the canister at a specific location and would be configured to alarm when a canister position was emptied.

- **Advantages**

  Alternative 2 would eliminate the disadvantages and principal hazards and risks identified in Alternative 1.

- **Disadvantages**

  The sensors of this system would be mounted underwater in a radiation field. This would limit the commercial availability of these components.

  To facilitate the installation and potential removal (maintenance) of the modular racks, the sensor wiring would need to be run vertically from each rack to the

interspersed throughout the basin above the basin water surface.

The racks would need to be designed to accept load cells on their load bearing members that transfer rack weight to the basin floor. This design would need to maintain the Safety Class 1 seismic qualification associated with the rack design.

Instrument sensors should be installed as pairs with one sensor being a spare. This would provide added margin to preclude maintenance because of a single sensor failure. This may require as many as 21,500 proximity probes and 7,500 load cells.

Rack maintenance would require the unloading and removal of the rack from the basin. There may not be sufficient spare storage to accommodate the unloading of a rack. The racks are joined during installation, therefore, a method of separation would need to be developed. The installation of the racks would be accomplished with the aid of nuclear divers. This would not be possible during maintenance, removal, and reinstallation. The racks would also need to be moved around and over filled storage racks to accomplish maintenance.

The sensors and associated wiring runs would be subject to potential damage during initial and any subsequent canister movement.

Sensors used to make confirmative measurements for inventory verification would require periodic calibration. This would require the removal of each rack on a periodic basis. Calibration would have the same inherent problems as maintenance, except that calibration is required while maintenance might not be necessary during a short time span.

- **Principal Hazards and Risks**

  The ALARA concerns associated with the inventory activities of Alternative 1 are applicable to the maintenance activities of Alternative 2.

  There is the potential for canister and rack damage during the loading/unloading of canisters and the removal/reinstallation of storage racks associated with the maintenance and calibration of an automated inventory system.

c. **Alternative 3: Deviation from DOE Order 5633.3A Bimonthly Inventory Compliance**

The basis for Alternative 3 is found in DOE Order 5633.3A: "Deviations to inventory frequency requirements described in Figure II-1 may be approved in accordance with DOE Order 5630.11A for inventories containing large number of items ..... where alternative control mechanisms provide assurance that unreported changes in inventories would be detected." The proposed consolidation of 8,750 to 11,500 canisters of spent fuel in the KW Basin should qualify as a large number of items. A deviation would seek to use appropriate measures for a realistic and cost effective approach to the protection of SNM in accordance with the

graded safeguards concept at the 100K Basins. Approval of this request would reduce the inventory frequency to an annual requirement. A review of the various codes and regulations applicable to spent fuel storage was completed. This review looked for guidance and technical justification for deviation from current bimonthly physical inventory requirements.

A review of ANSI and CFR standards used by commercial nuclear power plants to regulate spent fuel storage and inventory was made to determine the differences that existed which allow commercial plants to perform less stringent inventories and to provide technical justification for a deviation. The basic differences were in the types of SNM in the spent fuels and that once threshold values of plutonium were part of the SNM to be considered, the inventory requirements per the CFRs were similar.

Justification for deviation from inventory requirements could be based on previous requirements. It is estimated that DOE Order 5633.3A physical inventory requirements for Category II-D SNM would require 300 to 360 manhours of work for a bimonthly physical inventory. A change in the inventory frequency requirements from bimonthly to semiannually would reduce the overall manpower requirements and reduce the disadvantages stated in Alternative 1. A semiannual physical inventory was the requirement for Category II-D SNM in DOE Order 5633.3 and is still listed in WHC-CM-4-34. The change in physical inventory frequencies for Category II SNM with an attractiveness level D, low-grade materials, occurred during the transition from DOE Order 5633.3 to 5633.3A.

A waiver "requires implementation of compensative measures for the period of the waiver" and "a waiver will be for a period not to exceed 2 years." There is a complimentary relationship between the physical protection and material control of SNM as implied in the Summary and Conclusions section of this report. Compensative measures may take the form of enhanced security and physical protection of the KW Basin. The project N-030 engineering study provides a detailed look at security enhancements suitable for these facilities (ref 15). Implementation of security enhancements may provide the impetus for continued waiver.

Project N-030 improvements, if implemented, may provide the impetus for a variance for an indefinite period from the bimonthly physical inventory requirements. Alternative 3 is presented in the form of suggestion and idea. Lack of definitive action in Alternative 3 is because DOE makes the decision to grant a deviation from DOE orders. Any plan of action for compensative measures or equivalent levels of protection for potential deviation will utilize a vulnerability assessment to provide assurance that risks associated with theft and diversion of SNM are prevented. The vulnerability assessment should determine the areas where compensative measures or equivalent levels of protection are required.

- **Advantages**

  Any reduction in the frequency of the physical inventory requirements will lessen the disadvantages and principal hazards and risks addressed in Alternative 1.

Instrumentation associated with security system enhancement would not have the disadvantages associated with Alternative 2. Instrumentation would not be mounted underwater and would be available for maintenance and calibration.

- **Disadvantages**
  Alternative or equivalent means of providing adequate safeguards and security may be proposed to meet a specific requirement of Safeguards and Security Program orders and associated manuals, but these deviations must be DOE approved.

d. **Cost Information (Alternatives 1, 2, and 3)**
The alternatives in this section have assumed that the spent fuel consolidation has been implemented. No cost estimate was made for Alternative 2 as it was deemed a nonviable option in the final analysis. A cost comparison will be made comparing physical inventory requirements for Category II-D spent fuel. The assumptions associated with a Category II-D physical inventory are multiple attributes will need to be measured and determined for inventory validation. The most readily available attributes are location, identification number, and weight. Also, the KW and KE Basins are listed as statistically based inventories. It is being assumed that an approximately 10% sample of the basins will need to be sampled during each inventory. The comparison will consider the cost associated with a physical inventory of spent fuel in its current storage configuration, the cost of physical inventory associated with the spent fuel consolidated in the KW Basin in a three-tier rack configuration, and the relative cost of inventory for consolidated spent fuel in the KW Basin with a

waiver in place. The hours needed to perform the consolidated physical inventory with an approved waiver will assume that the spent fuel is still Category II-D with a yearly inventory frequency.

Currently, there are 3,671 sealed canisters located in the KW Basin and 1,150 metric tons of spent fuel in open canisters and an estimated 775 ft^3 (minimum) of sludge in the KE Basin. It is estimated that it will require 15 minutes to verify the location, lid identification number, and weigh three canisters in the KW Basin. The KE Basin inventory per Category II-D SNM requirements are not included because the spent fuel in this basin does not support multi-attribute validation, i.e., personnel can't weight, verify an identification number, or place a unique location on an item of spent fuel sludge. A 10% sample of 367 canisters at 15 min/3 canisters would require approximately 30 hours bimonthly to complete the physical inventory for the spent fuel currently stored in the KW Basin. Since one operator and one manager are involved in the physical inventory, a total of 60 manhours bimonthly or 360 manhours/year would be required for the physical inventory at the KW Basin.

The physical inventory of the KW Basin as outlined in Alternative 1, i.e., 8,750 to 11,500 sealed canisters in a three-tier rack, would require approximately 300 to 380 manhours bimonthly or 1,800 to 2,280 manhours/year to complete the physical inventory.

The time requirements for a physical inventory as outlined in Alternative 1, but with a waiver (as outlined in Alternative 3) to the bimonthly physical inventory frequency that allows

physical inventory at 1-year intervals, would require approximately 300 to 380 manhours/year.

3. Identification of Preferred Alternatives

a. Evaluation of Alternatives

Alternative 1 operates within the existing programs associated with the safeguards and security established for SNM material control. Therefore, no major programmatic changes would be required to implement this proposed physical inventory. There is no large capital cost associated with the implementation of this alternative as most of the required equipment already exists. However, there is a significant impact on Operations personnel and significant long-term costs associated with the bimonthly physical inventory (300 to 360 manhours bimonthly). There is an increased chance of storage canister damage due to moving large numbers of canisters in and out of a three-tier storage rack bimonthly.

The second alternative would reduce significantly the impact to operations and the potential canister damage associated with manually taking confirmative measurements for inventory verification. Conversely, a system to automate attribute measurements would be costly to implement because of the quantity of sensors required. An estimate for this system was not devised because of the extreme difficulty associated with system maintenance and the inability to provide the sensor calibrations required for confirmative attribute measurements used for inventory verification. This alternative was deemed not viable with respect to the requirements and limitations of the rack design (e.g., racks are coupled together during construction with the aid of divers; divers need adequate water shielding from stored fuel to aid with the coupling and

any subsequent uncoupling of the racks; and rack movement within the basin was limited to areas devoid of spent fuel storage).

b. **Preferred Alternative**

Alternative 3 is the preferred alternative. There are inherent problems associated with using instrumentation for inventory verification in the spent fuel basin as described above, but instrumentation can be used to enhance access controls and security systems. This application has been previously studied and can provide the necessary guidance for implementation. Use of instrumentation to provide an alternative means for adequate safeguards and security of SNM is more desirable than the use outlined in Alternative 2. A waiver would reduce the physical inventory requirements associated with Category II-D SNM, therefore, reducing the need for Operations personnel to verify approximately 875 to 1,150 canisters bimonthly.

IV. REQUIRED CHANGES TO IMPLEMENT PREFERRED ALTERNATIVE

A. CANISTER STORAGE

The sludge uncertainty has significant impact to the basin storage arrangement. Future packaging and quantities that are different from those used in the study will affect the developed storage arrangements. Multiple requirements of the canister storage racks make the design complicated and will require the development of special handling tools to use the racks. Each canister storage station is provided with a vertical passage for ultrasonic testing of the canisters. The clear space is 1-1/2 by 4 in. near the canister's gas trap. The final dimensions of the storage station will be adjusted in accordance to the dimensions of the actual test equipment.

B. MECHANICAL

The KW Basin water temperature maintained under present operating conditions may have to be reviewed and lowered because of the increase of the radionuclides generation rate from the added fuel. This is an operational decision.

C. INSTRUMENTATION AND INVENTORY CONTROL

A waiver to change the physical inventory requirements for the KW Basin is being considered by DOE. A vulnerability assessment of the MBA associated with the KW Basin should provide the guidance to determine what alternative means or compensative measures would best fulfill the requirements necessary to qualify for a variance or waiver.

V. CONSTRUCTIBILITY

A. CANISTER STORAGE

Following are descriptions of the construction activities to install the new three-tier steel rack storage modules. The activities involve moving new and existing racks and canisters to install the racks in the KW Basin. The project work plan will apply safety principles of ALARA to the radiation workers: to minimize exposure time, to provide as much distance from the fuel as possible, and to provide shielding for the workers.

There are three basic construction sequences: temporarily relocate the existing canisters, remove the existing racks, and place the new rack modules.

1. Temporary Relocation of Existing Canisters and New Storage

To move the existing racks and to prepare a safe underwater working area for the divers, existing stored fuel canisters must be temporarily relocated to vacate a working area. The area should be as large as possible. There are canister stations vacant in the

KW Basin that can be used for temporary canister relocation. The existing station and canister storage in the KW Basin are shown in Table 2.

TABLE 2

KW BASIN CANISTER STORAGE		
Basin Storage	Canister Stations Provided*	Vacant Stations**
West Bay	1,632	712
Central Bay	1,748	113
East Bay	1,632	449

* Reference drawing H-1-34763
** Reference K Basins operations data

There are 1,274 vacant stations in the KW Basin. More than half of the canisters in a bay can be relocated to these stations. Relocation does not have to be limited to the same bay. Canisters in the KW Basin will be temporarily relocated until placed in the new racks. The temporary storage will examine criticality requirements for each station. The existing monorails will be used to handle the canisters during temporary relocation. The canisters must be moved before the gratings are removed for construction access. Relocation will follow an approved canister handling construction procedure which considers both safety and handling time that will impact the construction schedule as thousands of canisters must be handled. The K Basin Operations group must be involved early in the project to develop the procedure and estimate the required time.

To arrange the new canister storage and plan the canister moving sequence, the following considerations should be included:

- Group canisters according to material (sludge, fuel, and their enrichment), canisters types (MKI, MKII, etc.) and bay storage.

- Layer storage (the lighter sludge canisters located in the upper layer and the stronger MKII canisters located in the lower layers).

- Canisters serial number arrangements.

The shipments of canisters from PUREX and the KE Basin should be conducted after the new rack installation is complete in the KW Basin. This is not in the scope of this engineering study.

2. <u>Remove Existing Racks</u>

For the construction and storage arrangements of the existing racks and canisters in the KW Basin, see as-built drawings H-1-34762 through H-1-34764, Rev. 1, dated 2-15-79. The single-tier steel racks occupy all three bays. The existing racks provided 5,012 stations for storage; however, there are only 3,817 canisters stored in the KW Basin. The racks and canisters rest on the basin floor and the rack columns are not anchored to the floor. There are effectively two modular rack sizes: 10 by 3.5 by 1.5 ft with 22 canister stations, and 15 by 3.5 by 1.5 ft with 30 canister stations. There are approximately 204 existing racks in the basin.

Construction Access - Floor and Building Access

Temporary construction accesses are required to move the existing racks in and out of the basin and building. Access to the basin through the grating will be provided by a 14-ft wide opening in an east-west direction the full length of the basin. Location of the access shall consider the path from the building access and will utilize the existing monorail system. The planned transportation corridor will not have any canisters beneath it during construction. The existing floor grating panels will be removed temporarily and will be replaced upon completion of the new rack installation.

Access through the building enclosure has the following alternatives:

- **Through the Door at the Northeast Corner of the Building:** The racks may be transported through one of the corridors that are approximately 7 ft high by 12 ft wide. The existing corridors are bounded by the bottom of a monorail array, through the top of the floor grating, and the grating pipe hanger arrays to the sides. Between the door and corridor are approximately four grating hangers and attached floor grating panels that require temporary removal or modifications to widen the corridor for construction access.

  The size of the new shop-assembled racks should enable the storage modules to be transported through the corridor. The corridor can accommodate the two-tier module design. Transportation of the standard three-tier module through the corridor has a tight space allowance. Further module design development and existing structure modifications may be required. For the larger new racks that can not pass through the corridor as one assembly, partial indoor assembly work will be required. A dedicated assembly area may be located on the grating floor above the water.

- **Through the Existing Railroad Entrance:** Modification of the track area (i.e., relocate existing equipment) to provide transportation clearance is required. Corridor transportation and transportation below the floor will be the same as the paragraph above.

- **Through the Roof:** Construct an approximately 9 by 11-ft opening through the roof and monorail framing to the grating floor level, one access for each bay will avoid cross bay

movement. Outdoor cranes will be required to transport the racks into the building. The bigger rack modules can be transported to the basin without partial assembled work indoors. It may be possible to set up two construction lines if necessary. Transportation of the racks below the floor will be the same as the other alternatives. (See reference drawings H-1-21103 and H-1-21104 for the existing structural roof framing, monorail support framing, and the grating floor framing.) This alternative is not recommended because it disturbs the existing building structure.

Construction Rigging System

Rack transportation will be by hanging the racks from the existing monorail system. The existing monorail system has a lifting capacity of 2,400 lb per 4 ft section and 900 lb/ft. Each existing monorail hoister has a 1-ton lifting capacity. The new standard rack module weighs approximately 4,500 lb. A temporary transportation and hoisting structure is required to transport, hoist and float the racks, and provide final adjustments to the rack placement. The hoist will be constructed from existing monorails or the grating floor and will require a review of the existing structures for the transportation and construction loads. The existing monorail system has been reviewed for construction rigging for a 6,000-lb load. A rigging system utilizing four hoisters on two adjacent monorails, with the hoisters spaced at a minimum of 4 ft apart, will be sufficient to handle the transportation of the new rack modules. Modifications to the monorail system may affect its system classification and certification. The basin superstructure is a Safety Class 3 structure. Review of the basin superstructure is not in the scope of this study. Per the above monorail lifting capacity, the overall roof system will be adequate for the construction loads.

Safety

All alternatives require preventative measures and a safety study to ensure that the racks and gratings will not fall on the stored fuel canisters in the basin but was not in the scope of this study. One option is to relocate all canisters from directly beneath the floor construction access during construction.

The rack construction requires underwater work. A working area in the basin for the divers to maintain a safe water shielding distance from the fuels will be provided by developing a larger working area devoid of fuel canisters and/or by installing lead panels between the fuels and divers as required or for additional shielding protection. Underwater work will be planned and practiced per ALARA before actual work begins.

The working distance between the divers and the spent fuel depends upon the radiation source intensity and the amount of lateral water between the diver and the source. A 28-in. water attenuation is approximately equal to 2 in. of lead. A combination of distance through the water and possible lead shielding must be within acceptable limits for dosage policy, working time, and contingency waiver. Existing monorails and temporary moving and hoisting construction systems will be used in lieu of using human labor whenever possible.

The KW Basin contains minimal accumulations of sludge that will require consideration, especially when divers are involved.

Planning Underwater Work Area

A half bay of canisters, approximately 800, would need to be vacated initially. Successive transfers from the remaining bays will have the new racks to transfer to. The procedure and time required to relocate the canisters will require additional study. The relocation

will provide a 34- by 39-ft work area from which to start removing the existing racks and to install the new modules. After the new modules are installed, canisters can be progressively replaced into the new racks from the existing racks just ahead of construction to provide additional working space (see sketch ES-N040-S04).

After the existing racks in the planned work area are emptied of canisters, the divers will untie or cut existing racks and ready them for removal. The removed racks can be decontaminated, cut into pieces, and packaged in a designated area (indoors) before release from the building. Alternatively, the removed racks can be cut up underwater, raised, and put into casks on railcars for shipment to a waste disposal area.

The existing monorail system can be used to lift and transport the existing racks through the floor grating access at each bay. Existing monorail systems will be reviewed and modified as required for the task. The facilities and method and time required to demolish, decontaminate, and dispose of the existing racks require further study. A review of the procedure should include both a safety and cost evaluation.

3. Place New Rack Modules

The new rack modules will be shop-fabricated and shipped to the site. New rack modules will be transported into the building and into each bay through construction accesses and rigging system discussed. Welders will do final assembly and welding to the new racks, as required, at a dedicated assembly area above water. Divers will make final adjustments during placement of the new racks and connect the racks.

The estimated fabrication and construction schedule of the above activities is approximately 1 year.

The construction times may overlap construction activities, thus, reducing the construction schedule. There are uncertainties with the canister handling time and indoor construction rigging methods that may impact the estimated construction times.

The construction activity descriptions are conceptual. The construction schedule and cost estimates are to support a decision-making process only and will require a more thorough investigation of the chosen alternative when proceeding with this project.

VI. REFERENCES

1. Letter of Instruction, W.A. Frier (Westinghouse Hanford Company) to L.A. Bast (ICF Kaiser Hanford Company), "Spent Fuel Consolidation at 105 KW, Consider Canister Surveillance Drain Sump Pits and Sludge Canisters in Engineering Study," Project N-040, Document No. 9451678, March 15, 1994.

2. Notice of Construction for the 105 KE Encapsulation Activity, prepared by WHC for the U.S. Department of Energy, Richland Operations Office, Document No. DOE/RL-93-13, March 1993.

3. Engineering Change Notice, "KE/KW Chiller Replacement," prepared by Westinghouse Hanford Company, ECN No. 196549, 1993.

4. Internal Memorandum, Westinghouse Hanford Company, B.V. Winkel and S.K. Kanjilal to B.H. Johnson, "Structural Feasibility of Spent Fuel Consolidation at 105 KW," Memo No. 8D420-BVW-94-003, June 14, 1994.

5. Safety Analysis Report, "Safety Analysis Irradiated N Reactor Fuel," prepared by Westinghouse Hanford Company, Document No. WHC-SD-WM-SAR-062, Rev. 0, December 6, 1993.

6. Engineering Report, "Consolidated Fuel Shielding Calculations," prepared by Westinghouse Hanford Company, Document No. WHC-SD-NR-ER-105, Rev. 0, 1994.

7. Engineering Report, "N Reactor Facility Process Standards, Fissile Material Control - KE and KW Storage," prepared by Westinghouse Hanford Company, Document No. WHC-NR-M-2, Volume 3, Rev. 0, 1991.

8. Report, "105 KE/KW Irradiated Fuel Storage Basins Seismic Qualifications, Phase III of III," prepared by Westinghouse Hanford Company, Document No. WHC-SD-N031-SA-002, Rev. 0, 1993.

9. Calculations, "N Reactor Spent Fuel Compacted Storage Criticality Calculations," prepared by Westinghouse Hanford Company, Document No. WHC-SD-NR-CSA-004, 1991.

10. Draft Report, "Consolidated Fuel Criticality Calculations," prepared by Westinghouse Hanford Company, Document No. WHC-SD-NR-CSER-015, 1994.

11. Report, "100K Basins Spent Fuel Decay Heat," prepared by Westinghouse Hanford Company, Document No. WHC-SD-NR-ANAL-002, 1990.

12. Report, "Consolidated Fuel Decay Heat Calcualtions," prepared by Westinghouse Hanford Company, Document No. WHC-SD-NR-ANAL-014, Rev. 0, 1994.

13. Hanford Plant Standard," Standard Design Criteria for Heating, Ventilating and Air Conditioning," Document No. SDC 5.1, Rev. 7, December 7, 1992.

14. Westinghouse Hanford Company Manual WHC-CM-4-35, "Safeguards Material Control," Release No. 9, 1994.

15. Engineering Study, "105 KE/105 KW Basins Security System Upgrades," prepared by Westinghouse Hanford Company, Document No. WHC-SD-N030-ES-001, Rev. 0, July 22, 1993.

16. Engineering Report, "Irradiated N Reactor Fuel Consolidated Storage Shielding Calculations," prepared by Westinghouse Hanford Company, Document No. WHC-SD-NR-ER-090, Rev. 0, 1991.

17. U.S. Department of Energy Orders
DOE 5630.11A, "Safeguards and Security Program"
DOE 5633.3, "Control and Accountability of Nuclear Materials"
DOE 5633.3A, "Control and Accountability of Nuclear Materials"
DOE 6430.1A, "General Design Criteria"

18. Specifications
ANSI N15.8-1074, "Nuclear Material Control Systems for Nuclear Power Plants."

ANSI N15.26-1976, "Physical Protection of Special Nuclear Material Within a Facility."

10 CFR 70.51, "Material Balance, Inventory, and Records Requirements."

10 CFR 70.57, "Measurement Control Program for Special Nuclear Materials Control and Accounting."

10 CFR 74, "Material Control and Accounting of Special Nuclear Material."

19. Functional Design Criteria, "105 KE/105 KW Basins Security System Upgrades," prepared by Westinghouse Hanford Company, Document No. WHC-SD-N030-FDC-001, Rev. 0, January 10, 1994.

20. Report, "Safety Analysis Irradiated N Reactor Fuel," prepared by Westinghouse Hanford Company, Document No. WHC-SP-0300, 1988.

21. Westinghouse Hanford Company WHC-CM-6-1, "Standard Engineering Practices," Release No. 59, 1994.

22. Report, "Extreme Load Analyses of the 100K Fuel Storage Basins and Clearwells," prepared by United Nuclear Industries, Document No. UNI-287, 1975.

23. Report, "Fuel Storage Basin Criticality Safety Analysis and Technical Basis," prepared by Douglas United Nuclear, Inc., Document No. DUN-NUSAR-7824, 1971.

24. Internal Memorandum, Westinghouse Hanford Company, Defense Reactor Safety Programs, "Feasibility of Utilizing KW Basin as a Single Fuel Storage Facility," January 15, 1990.

25. Operations Safety Requirements, "UNC Nonreactor Nuclear Facilities KE and KW Storage Basins," prepared by United Nuclear Industries, Document No. UNI-M-139, Vol. 1, 1987.

26. Hanford Plant Standard, "Standard Arch-Civil Design Criteria - Design Loads for Facilities," Document No. SDC 4.1, Rev. 12, September 3, 1993.

27. Engineering Report, "K Area Systems - Identification of System Number and Safety Classification," prepared by Westinghouse Hanford Company, Document No. WHC-SD-NR-SD-003, Rev. 0, 1991.

28. Engineering Report, "Test Report for Qualification of Asbestos - Cement Roof Panels for Personnel Access and Roofing Removal and Installation Equipment for the 105 KE/105 KW Irradiated Fuel Storage Basin Roofs at Hanford," prepared by Westinghouse Hanford Company, Document No. WHC-SD-NR-TRP-017, Rev. 0, 1994.

29. Internal Memorandum, Westinghouse Hanford Company, R.A. Giller to W.A. Frier and R.J. Kuhta, "105 K-East New Roof Design Loads," Document No. 92-RAG-029, 1992.

30. Engineering Report, "105 KW and 105 KE Irradiated Fuel Storage Facility Engineering Report for Facility Life Extension," prepared by Westinghouse Hanford Company, Document No. WHC-SD-NR-FLE-001, Rev. 0, 1991.

31. Engineering Change Notice, "KE/KW Chiller Replacement," prepared by Westinghouse Hanford Company, ECN No. 196547, 1993a.

32. Engineering Report, "105 KE/105 KW Irradiated Fuel Storage Basins Seismic Qualification," prepared by Westinghouse Hanford Company, Document No. WHC-SD-NR-SA-024, Rev. 0, December 1991.

33. Memorandum, B.H. Johnson (Westinghouse Hanford Company) to L.A. Bast (ICF Kaiser Hanford Company), "Project N-040, K.R. Conn's Comments on Basin Cooling and Water Treatment Portion of Engineering Study," Document No. 94-BHJ-011, March 7, 1994.

APPENDIX A

Cost Estimate

KAISER ENGINEERS HANFORD
WESTINGHOUSE HANFORD
JOB NO. N-040SAA1
FILE NO. ER5281

** IEST - INTERACTIVE ESTIMATING **
KW CONSOLIDATED FUEL STORAGE ENGINEERING STUDY
STUDY ESTIMATE, ER5281
DOE_R01 - PROJECT COST SUMMARY

DATE 05/19/94 14:16:17
BY LEE H. ROSSON 3-6148

COST CODE	DESCRIPTION	ESCALATED TOTAL COST	CONTINGENCY %	CONTINGENCY TOTAL	TOTAL DOLLARS
000	ENGINEERING	370,000	50	190,000	560,000
700	SPECIAL EQUIP/PROCESS SYSTEMS	9,010,000	50	4,510,000	13,520,000
	(ADJUSTED TO MEET DOE 5100.4)	20,000			20,000
	PROJECT TOTAL	9,400,000	50	4,700,000	14,100,000

TYPE OF ESTIMATE: STUDY ESTIMATE 19 MAY 1994

ARCHITECT ENGINEER: A Chadwick

OPERATING CONTRACTOR:

REMARKS: COMMENTS FROM D. CHOU DATED 13 & 19 MAY HAVE BEEN INCORPORATED INTO THIS ESTIMATE.

(ROUNDED/ADJUSTED TO THE NEAREST " 10,000 / 100,000 " - PERCENTAGES NOT RECALCULATED TO REFLECT ROUNDING)

KAISER ENGINEERS HANFORD
WESTINGHOUSE HANFORD
JOB NO. N-040SAA1
FILE NO. ER5281

** IEST - INTERACTIVE ESTIMATING **
KW CONSOLIDATED FUEL STORAGE ENGINEERING STUDY
STUDY ESTIMATE, ER5281
DOE_R02 - WORK BREAKDOWN STRUCTURE SUMMARY

DATE 05/19/94 14:16:31
BY LEE N. ROSSON 3-6148

WBS	DESCRIPTION	ESTIMATE SUBTOTAL	ONSITE INDIRECTS	SUB TOTAL	ESCALATION %	ESCALATION TOTAL	SUB TOTAL	CONTINGENCY %	CONTINGENCY TOTAL	TOTAL DOLLARS
111000	DEFINITIVE DESIGN-CAT 1-ONSITE E/C	282000	0	282000	10.49	29582	311582	50	155791	467373
121000	ENGINEERING/INSPECTION-ONSITE E/C	55000	0	55000	12.27	6749	61749	50	30874	92623
SUBTOTAL 1	ENGINEERING	337000	0	337000	10.78	36331	373331	50	186665	559996
210004	RACK MODULES	4545000	0	4545000	12.29	558581	5103581	50	2551790	7655371
SUBTOTAL 2	PROCUREMENT	4545000	0	4545000	12.29	558581	5103581	50	2551790	7655371
311000	FORCE ACCOUNT CONSTR - ONSITE E/C	3208310	0	3208310	12.29	394301	3602611	50	1801306	5403917
SUBTOTAL 3	CONSTRUCTION	3208310	0	3208310	12.29	394301	3602611	50	1801306	5403917
411000	PROJECT INTEGRATION	275000	0	275000	12.27	33743	308743	50	154371	463114
SUBTOTAL 4	PROJECT INTEGRATION	275000	0	275000	12.27	33743	308743	50	154371	463114
PROJECT TOTAL		8,365,310	0	8,365,310	12.23	1,022,956	9,388,266	50	4,694,132	14,082,398

1. DOCUMENTS AND DRAWINGS

DOCUMENTS: NO-40 STRUCTURAL REPORT DRAFT BY D.T. CHOU

DRAWINGS: SKETCH NOS ES-N040-S01, S02, AND S03

2. MATERIAL PRICES

UNIT COSTS REPRESENT CURRENT PRICES FOR SPECIFIED MATERIAL.

3. LABOR RATES

CURRENT KEH BASE CRAFT RATES, AS ISSUED BY KEH FINANCE (EFFECTIVE 02-01-94), INCLUDE FRINGE BENEFITS, LABOR INSURANCE, TAXES AND TRAVEL WHERE APPLICABLE, PER HANFORD SITE STABILIZATION AGREEMENT, APPENDIX A (EFFECTIVE 02-01-94). NON CRAFT HOURLY RATES ARE BASED ON THE 1994 FISCAL YEAR BUDGET LIQUIDATION RATES AS ISSUED BY KEH FINANCE (EFFECTIVE 10-01-93).

4. GENERAL REQUIREMENTS/TECHNICAL SERVICES/OVERHEADS

A.) ONSITE CONSTRUCTION FORCES GENERAL REQUIREMENTS, TECHNICAL SERVICES AND CRAFT OVERHEAD COSTS ARE INCLUDED AS A COMPOSITE PERCENTAGE BASED ON THE KEH ESTIMATING FACTOR/BILLING SCHEDULE, REVISION 16, DATED OCTOBER 01, 1993. THE TOTAL COMPOSITE PERCENTAGE APPLIED TO ONSITE CONSTRUCTION FORCES LABOR, FOR THIS PROJECT, IS 93% FOR SHOP WORK AND 134% FOR FIELD WORK, WHICH IS REFLECTED IN THE "OH&P/B&I" COLUMN OF THE ESTIMATE DETAIL.

B.) ONSITE CONTRACT ADMINISTRATION AND CONSTRUCTION MANAGEMENT COSTS, ASSOCIATED WITH THE OVERALL MANAGEMENT OF THE FIXED PRICE CONTRACTS, ARE INCLUDED AS A COMPOSITE PERCENTAGE AND LUMP SUM ALLOWANCE (FOR BID PACKAGE PREP) BASED ON THE ESTIMATING FACTOR/BILLING SCHEDULE. THE TOTAL COMPOSITE PERCENTAGE AND LUMP SUM ALLOWANCE ARE APPLIED AGAINST THE TOTAL FIXED PRICE CONTRACT AMOUNT WHICH IS REFLECTED ON THE KEH SUMMARY REPORT DOER07, INCLUDED WITH THIS ESTIMATE.

C.) FIXED PRICE CONTRACTOR OVERHEAD, PROFIT, BOND AND INSURANCE COSTS HAVE BEEN APPLIED AT THE FOLLOWING PERCENTAGES AND ARE REFLECTED IN THE "OH&P/B&I" COLUMN OF THE ESTIMATE DETAIL:
SUBCONTRACTS - 20%

5. ESCALATION

ESCALATION PERCENTAGES WERE CALCULATED BY THE HANFORD MATERIAL & LABOR ESCALATION STUDY, DATED FEBRUARY 1994.

6. ROUNDING

U.S. DEPARTMENT OF ENERGY - DOE ORDER 5100.4 PAGE I-32 SUBPARAGRAPH (M), REQUIRES ROUNDING OF ALL GENERAL PLANT PROJECTS (GPP'S) AND LINE ITEM (LI) COST ESTIMATES. REFERENCE: DOE 5100.4, FIGURE I-11, DATED 10-31-84.

7. REMARKS

A.) THIS ESTIMATE ASSUMES NO BURNOUT WILL OCCUR DURING THE COURSE OF THIS PROJECT.
B.) ASSUME NO MASK WORK FOR C.F. PORTION OF THE PROJECT, 15% SWP HAS BEEN APPLIED TO C.F. LABOR HOURS.
C.) THIS ESTIMATE DOES NOT INCLUDE ANY COSTS FOR OPERATIONS SUPPORT OR RELOCATION OF FUEL.
D.) THIS ESTIMATE DOES NOT INCLUDE ANY COSTS FOR ESCORTS
E.) THIS ESTIMATE DOES NOT INCLUDE ANY COSTS FOR FIXED PRICE CONTRACTOR TRAVEL OR PER DIEM EXPENSES.
F.) THIS ESTIMATE DOES NOT INCLUDE ANY COSTS FOR DECONTAMINATION
G.) THIS ESTIMATE DOES NOT INCLUDE ANY COSTS FOR TLD MONITORING OR TESTING.
H.) ASSUME NO LEAD PAINT OR ASBESTOS WILL BE ENCOUNTERED DURING CONSTRUCTION.
I.) THIS ESTIMATE DOES NOT INCLUDE ANY COSTS FOR FACILITY MODIFICATIONS.
J.) ALL MATERIAL QUANTITIES ARE FROM THE ABOVE SKETCHES.
K.) THE CONSTRUCTION FORCES PORTION OF THIS ESTIMATE REMOVES AND REPLACES THE EXISTING STORAGE MODULES.
L.) ALL DIVING LABOR COSTS SHOWN IN THIS ESTIMATE HAVE BEEN TAKEN FROM THE DIVING REPAIRS STUDY REPORT PROVIDED BY WHC DIVING CONSULTANT.
M.) ASSUME THE DESIGN WILL BE PERFORMED BY KAISER ENGINEERS HANFORD.
N.) ASSUME THE 105 KE/KW BASIN STRUCTURAL ANALYSIS IS PERFORMED BY ICF KAISER HANFORD.
O.) NO ALLOWANCE IS PROVIDED FOR AS-BUILDING THE STRUCTURE PRIOR TO DESIGN.
P.) ADDITIONAL DESIGN TIME HAS BEEN PROVIDED TO SUPPORT CONSTRUCTIBILITY REVIEW.
Q.) ASSUME BASIN A.I. WILL BE PROVIDED BY THE WHC DIVING CONSULTANT.
R.) ASSUME BASIN DIVING CONSTRUCTION CONTRACT WILL HAVE CM BY THE WHC DIVING CONSULTANT WHICH WILL ALSO ASSIST IN PREPARING THE BID DOCUMENTS.
S.) DUE TO THE LACK OF INFORMATION AVAILABLE, AND THE UNUSUALLY HIGH NUMBER OF ALLOWANCES AND ASSUMPTIONS THAT HAVE BEEN MADE, THIS ESTIMATE HAS A LOW LEVEL OF CONFIDENCE.

T.) THIS ESTIMATE DOES NOT INCLUDE BURIAL BOXES OR DISPOSAL OF RACKS OR WASTE WATER.

KAISER ENGINEERS HANFORD
WESTINGHOUSE HANFORD
JOB NO. N-040SAA1
FILE NO. ER5281

** IEST - INTERACTIVE ESTIMATING **
KW CONSOLIDATED FUEL STORAGE ENGINEERING STUDY
STUDY ESTIMATE, ER5281
DOE_R04 - COST CODE ACCOUNT SUMMARY

DATE 05/19/94 14:16:49
BY LEE H. ROSSON 3-6148

COST CODE/WBS	DESCRIPTION	ESTIMATE SUBTOTAL	ONSITE INDIRECTS	SUB TOTAL	ESCALATION %	ESCALATION TOTAL	SUB TOTAL	CONTINGENCY %	CONTINGENCY TOTAL	TOTAL DOLLARS
000	ENGINEERING									
111000	DEFINITIVE DESIGN-CAT 1-ONSITE E/C	282000	0	282000	10.49	29582	311582	50	155791	467373
121000	ENGINEERING/INSPECTION-ONSITE E/C	55000	0	55000	12.27	6749	61749	50	30874	92623
TOTAL 000	ENGINEERING	337000	0	337000	10.78	36331	373331	50	186665	559996
700	SPECIAL EQUIP/PROCESS SYSTEMS									
210004	RACK MODULES	4545000	0	4545000	12.29	558581	5103581	50	2551790	7655371
311000	FORCE ACCOUNT CONSTR - ONSITE E/C	3208310	0	3208310	12.29	394301	3602611	50	1801306	5403917
411000	PROJECT INTEGRATION	275000	0	275000	12.27	33743	308743	50	154371	463114
TOTAL 700	SPECIAL EQUIP/PROCESS SYSTEM	8028310	0	8028310	12.29	986625	9014935	50	4507467	13522402
PROJECT TOTAL		8,365,310	0	8,365,310	12.23	1,022,956	9,388,266	50	4,694,132	14,082,398

KAISER ENGINEERS HANFORD
WESTINGHOUSE HANFORD
JOB NO. N-040SAA1
FILE NO. ER5281

** IEST - INTERACTIVE ESTIMATING **
KW CONSOLIDATED FUEL STORAGE ENGINEERING STUDY
STUDY ESTIMATE, ER5281
DOE_R05 - ESTIMATE SUMMARY BY CSI DIVISION

DATE 05/19/94 14:16:59
BY LEE H. ROSSON 3-6148

CSI	DESCRIPTION	ESTIMATE SUBTOTAL	ONSITE INDIRECTS	SUB TOTAL	ESCALATION %	ESCALATION TOTAL	SUB TOTAL	CONTINGENCY %	CONTINGENCY TOTAL	TOTAL DOLLARS
ENGINEERING										
00	TECHNICAL SERVICES	337000	0	337000	10.78	36331	373331	50	186665	559996
	TOTAL ENGINEERING	337,000	0	337,000	10.78	36,331	373,331	50	186,665	559,996
CONSTRUCTION										
01	GENERAL REQUIRMENTS	414674	0	414674	12.29	50963	465637	50	232819	698456
05	METALS	7338636	0	7338636	12.29	901919	8240555	50	4120277	12360832
19	PROJECT MANAGEMENT	275000	0	275000	12.27	33743	308743	50	154371	463114
	TOTAL CONSTRUCTION	8,028,310	0	8,028,310	12.29	986,625	9,014,935	50	4,507,467	13,522,402
PROJECT TOTAL		8,365,310	0	8,365,310	12.23	1,022,956	9,388,266	50	4,694,132	14,082,398

REFERENCE: ESTIMATE BASIS SHEET PAGE 3 OF 8
COST CODE ACCOUNT SUMMARY PAGE 5 OF 8

THE U.S. DEPARTMENT OF ENERGY - RICHLAND ORDER 5700.3 "COST ESTIMATING, ANALYSIS AND STANDARDIZATION" DATED 3-27-85, PROVIDES GUIDELINES FOR ESTIMATE CONTINGENCIES. THE GUIDELINE FOR A STUDY ESTIMATE SHOULD HAVE AN OVERALL RANGE OF 15 TO 50 % .

CONTINGENCY IS EVALUATED AT THE THIRD COST CODE LEVEL AND SUMMARIZED AT THE PRIMARY AND SECONDARY COST CODE LEVEL OF THE DETAILED COST ESTIMATE.

ENGINEERING

AVERAGE ENGINEERING CONTINGENCY 50 %

CONSTRUCTION

AVERAGE CONSTRUCTION CONTINGENCY 50 %

AVERAGE PROJECT CONTINGENCY 50 %

KAISER ENGINEERS HANFORD
WESTINGHOUSE HANFORD
JOB NO. N-040SAA1
FILE NO. ER5281

** IEST - INTERACTIVE ESTIMATING **
KW CONSOLIDATED FUEL STORAGE ENGINEERING STUDY
STUDY ESTIMATE, ER5281
DOE_R07 - ONSITE INDIRECT COSTS BY WBS

DATE 05/19/94 14:17:14
BY LEE N. ROSSON 3-6148

WBS	DESCRIPTION	ESTIMATE SUBTOTAL	CONTRACT ADMINISTRATION %	CONTRACT ADMINISTRATION TOTAL	BID PACK PREP.	OTHER INDIRECTS	TOTAL INDIRECTS
111000	DEFINITIVE DESIGN-CAT 1-ONSITE E/C	282000	0.00	0	0	0	0
121000	ENGINEERING/INSPECTION-ONSITE E/C	55000	0.00	0	0	0	0
210004	RACK MODULES	4545000	0.00	0	0	0	0
311000	FORCE ACCOUNT CONSTR - ONSITE E/C	3208310	0.00	0	0	0	0
411000	PROJECT INTEGRATION	275000	0.00	0	0	0	0
PROJECT TOTAL		8,365,310		0	0	0	0

APPENDIX B

Calculation Index

PROJECT/JOB CALCULATION MASTER INDEX

Project/Job Number N-040- ER5281

Calc No.	Rev	Status	Disc.	Calculation Title	Comments
S-01	0	Prelim	24	Fuel Rack Module and Storage Arrangement	
H-01	0	Prelim	27	Fuel Consolidation at 105 KW Basin: Cooling Requirements	
H-02	0	Prelim	27	Fuel Consolidation at 105 KW Basin: Cooling Requirements	
H-03	0	Prelim	27	Estimate Evaporation Rate from Basin Surface: 105 KW	

APPENDIX C

Escalation Analysis Schedule

KAISER ENGINEERS
HANFORD

ESCALATION ANALYSIS SCHEDULE

PROJECT NO./WORK ORDER NO. NO 40 SAA1

TITLE KW CONSOLIDATED FUEL STORAGE ENG. STUDY

REQUESTED BY D. CHOU

PREPARED BY L ROSSON DATE 19 MAY 94

APPROVED BY _____ DATE _____

Tasks are shown as forecasted work and do not represent approved schedules nor manpower assignments.

FISCAL YEAR																																				
CALENDAR YEAR																																				
MONTHS	J	F	M	A	M	J	J	A	S	O	N	D	J	F	M	A	M	J	J	A	S	O	N	D	J	F	M	A	M	J	J	A	S	O	N	D
DEFINITIVE DESIGN																																				
ENGRG/INSPECTION																																				
OTHER ENGRG/OPERATING																																				
PROCUREMENT (2)																																				
CONSTRUCTION																																				

ENGINEERING ESCALATION

D.D. 10.49%
E./I. 12.27

(1) CONSTRUCTION AND PROCUREMENT ESCALATION

CONST. 12.29 %

(1) To be provided by Estimating Department.

KEH-291 (6-82)

C-1

WHC-SD-NO40-ES-001, REV. 0

APPENDIX D

Radionuclides Data

105-KW Fuel Storage Basin

Comparison of Radionuclide Concentrations and Water Treatment System Operating History (1992 through 1994)

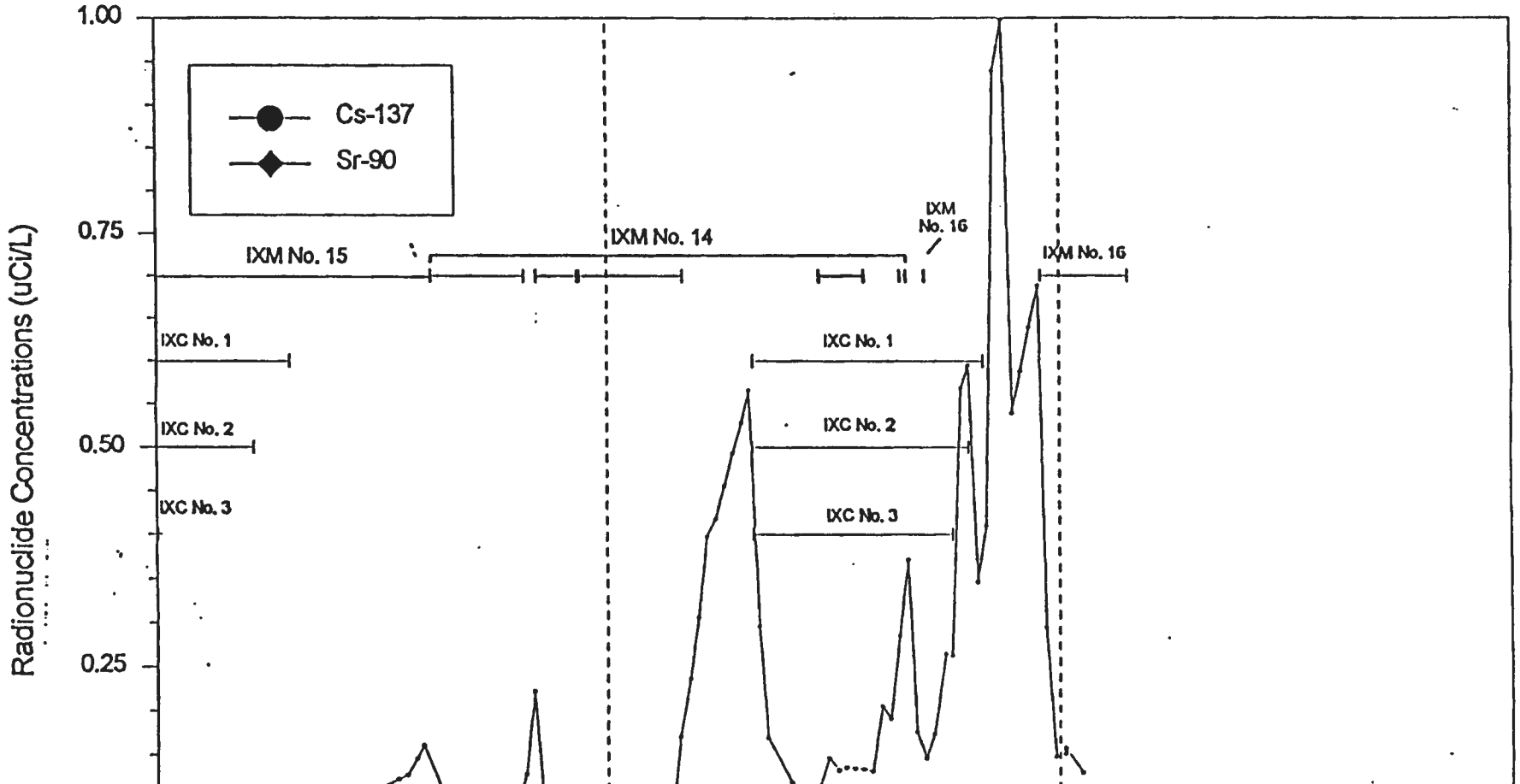

KW BASIN TRENDING DATA – ANALYSIS RESULTS PROVIDED BY THE 183KE HP-LAB

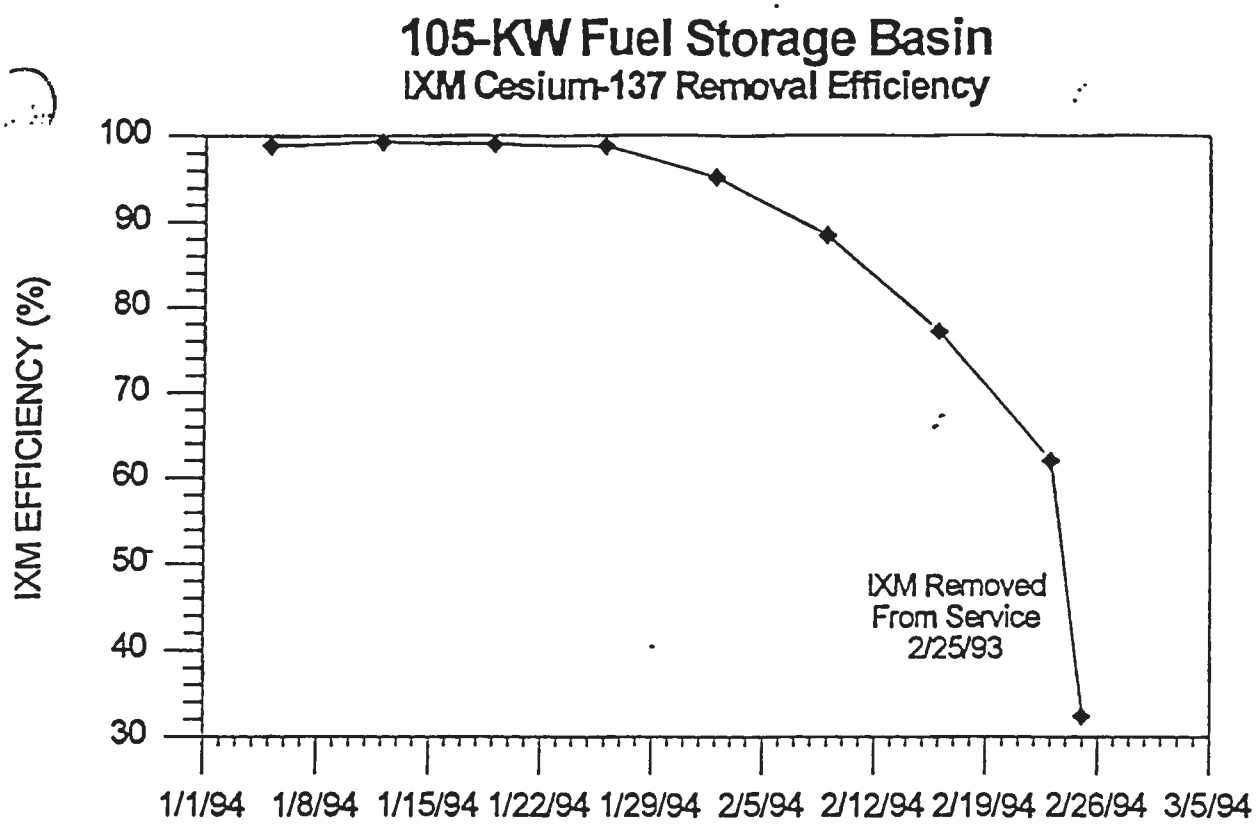

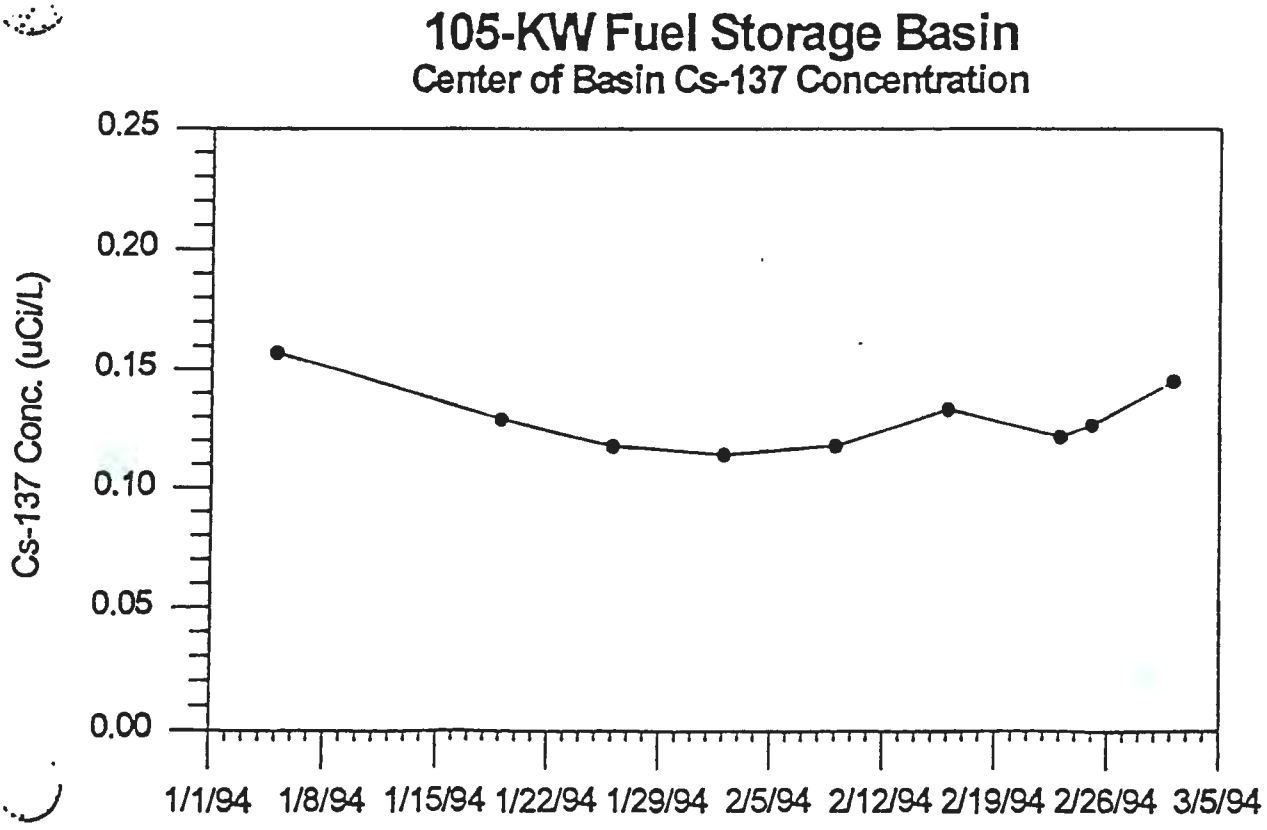

105-KW Fuel Storage Basin
Basin Temperature Vs. Cs-137 Source Term

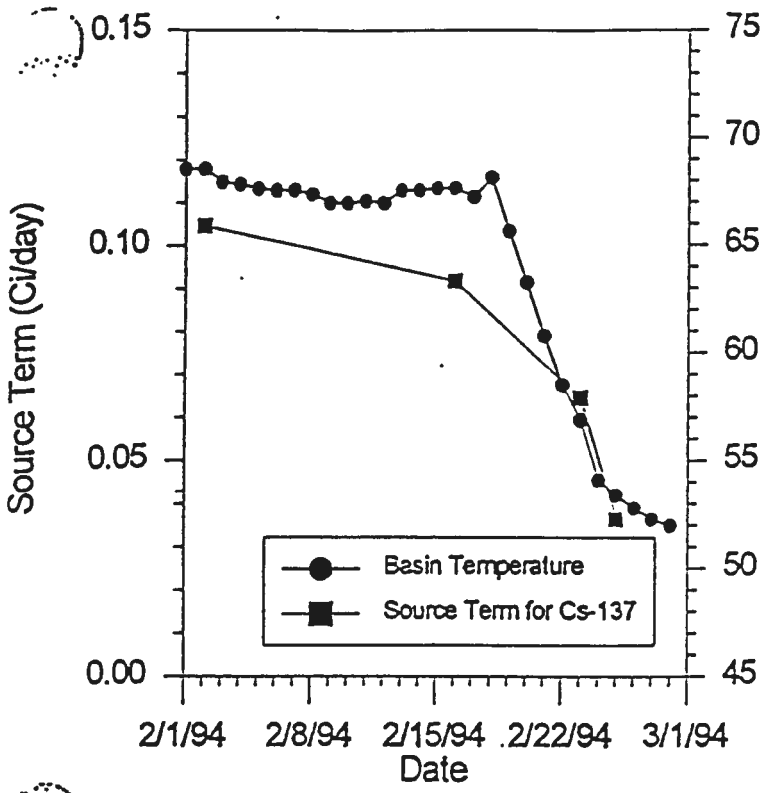

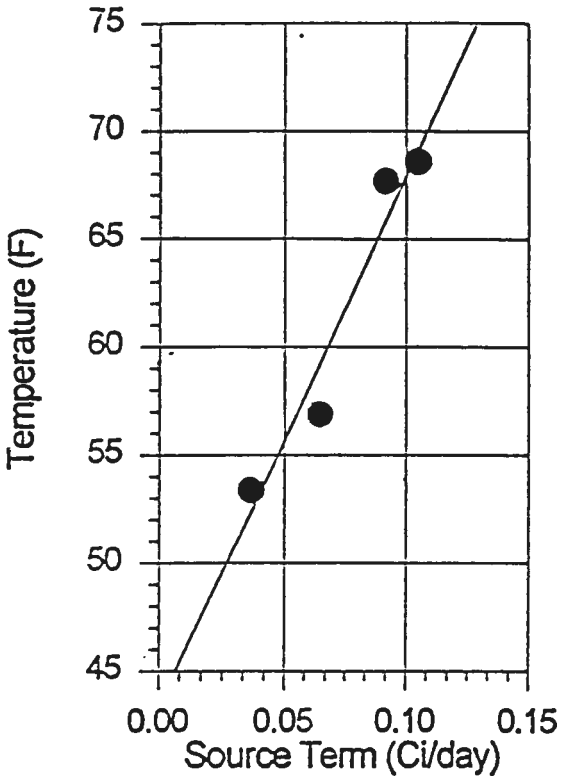

Equilibrium Cs-137 Concentration in KW Basin
Vs. Cs-137 Source Term

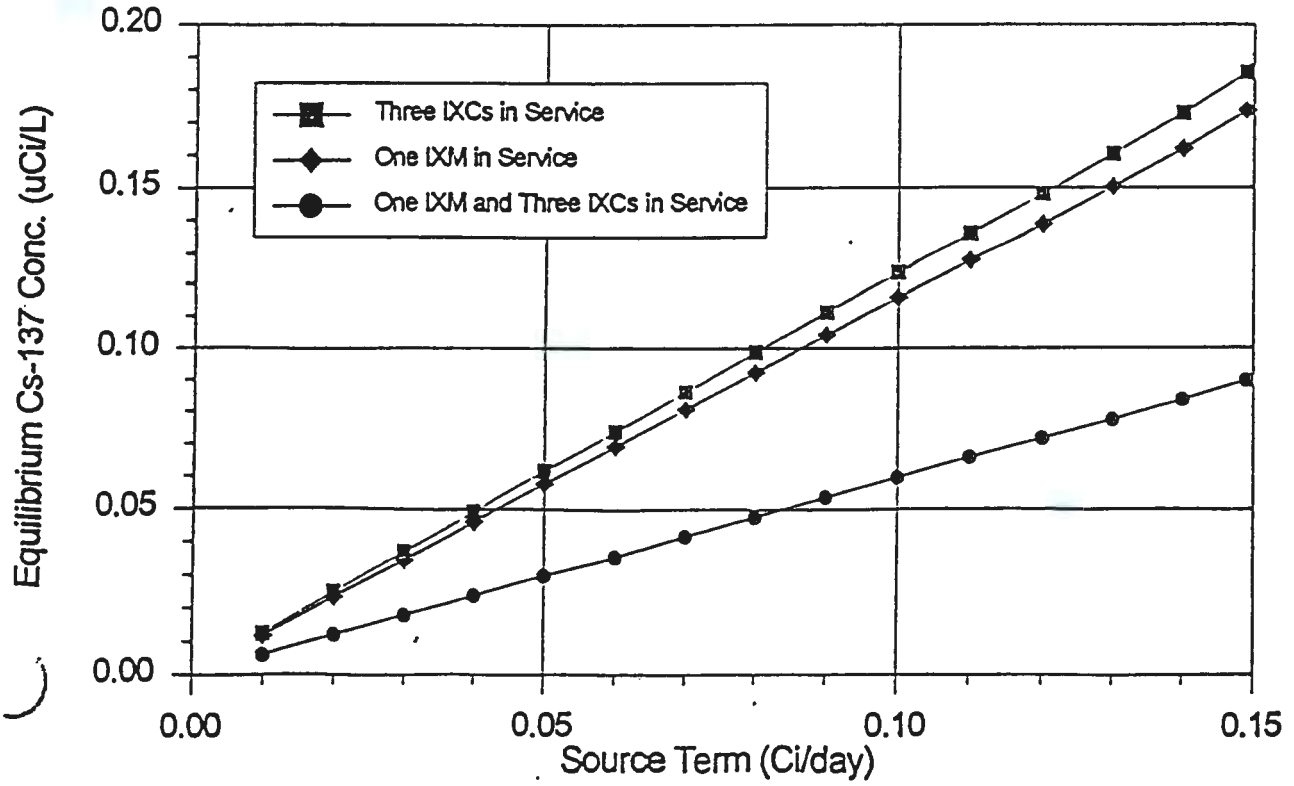

APPENDIX E

Figures

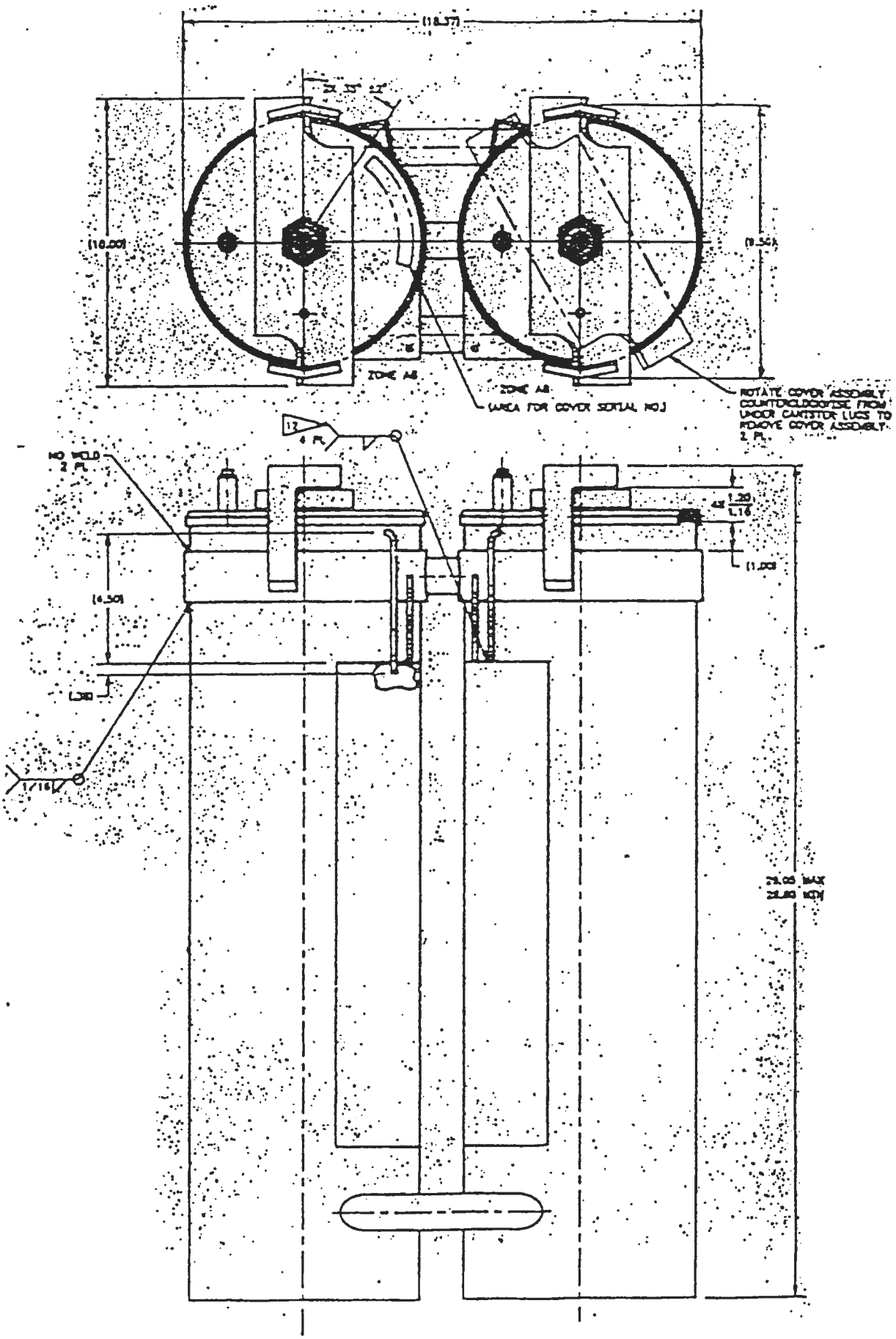

ASSEMBLY, MKII CANISTER

FUEL STORAGE CONFIGURATION

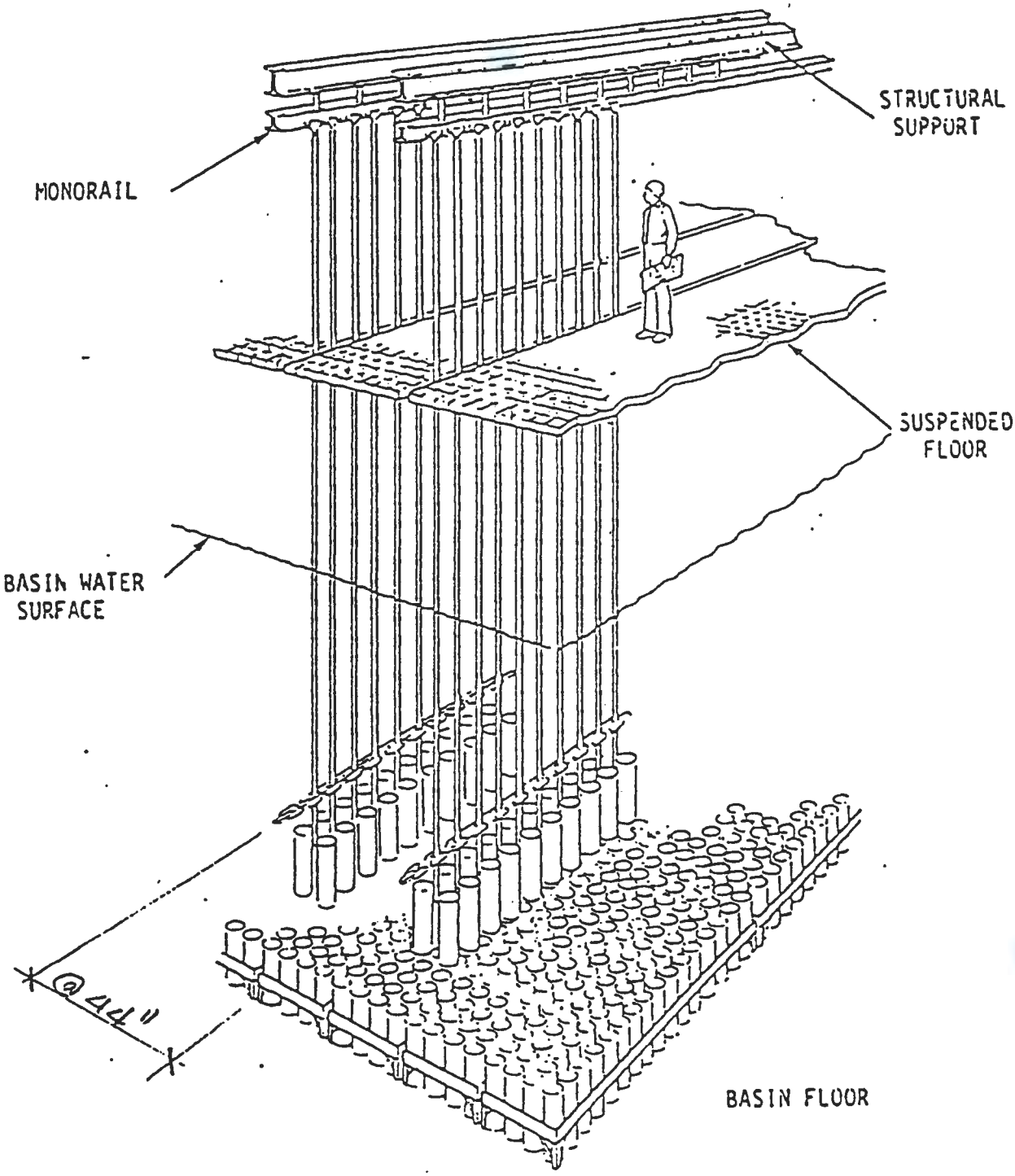

PROFILE OF FUEL STORAGE CONFIGURATION

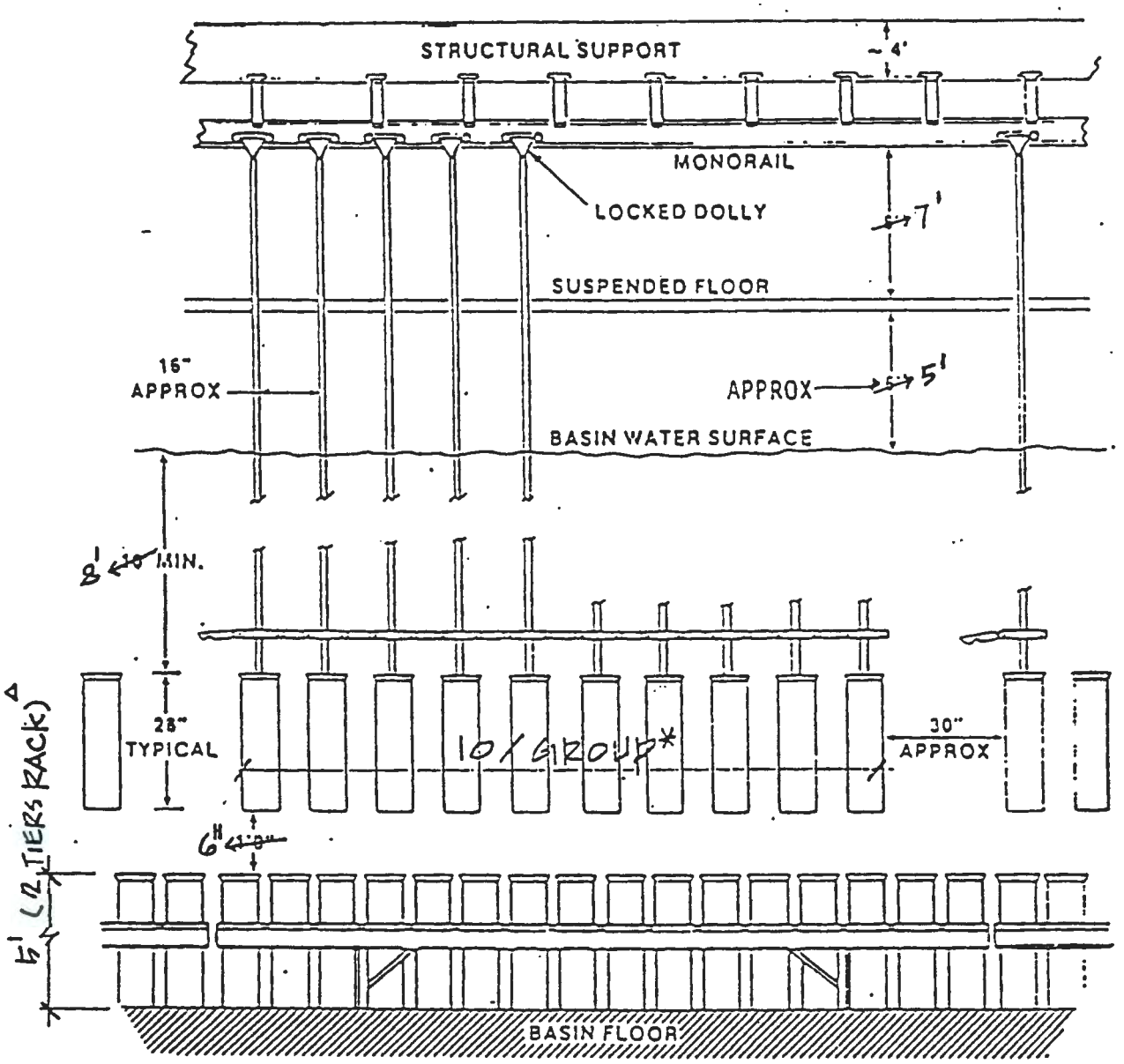

* 10 X 4 GROUPS = 40 EA/MONORAIL

△ SHOWN IS 1 TIER RACK.

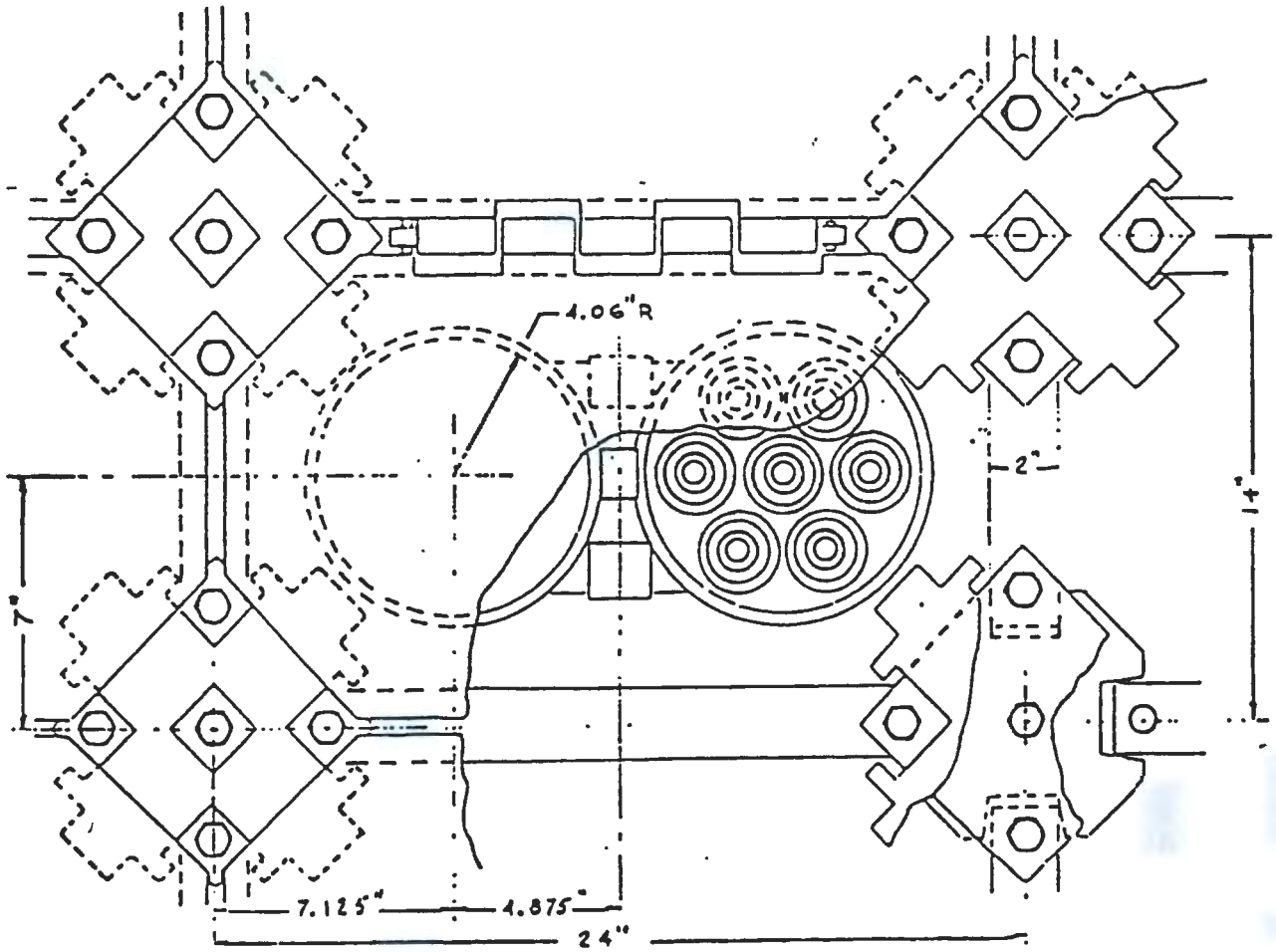

UNITED NUCLEAR INDUSTRIES, INC.

N REACTOR
SAFETY ANALYSIS REPORT

FUEL STORAGE CUBICLE
(TOP VIEW)

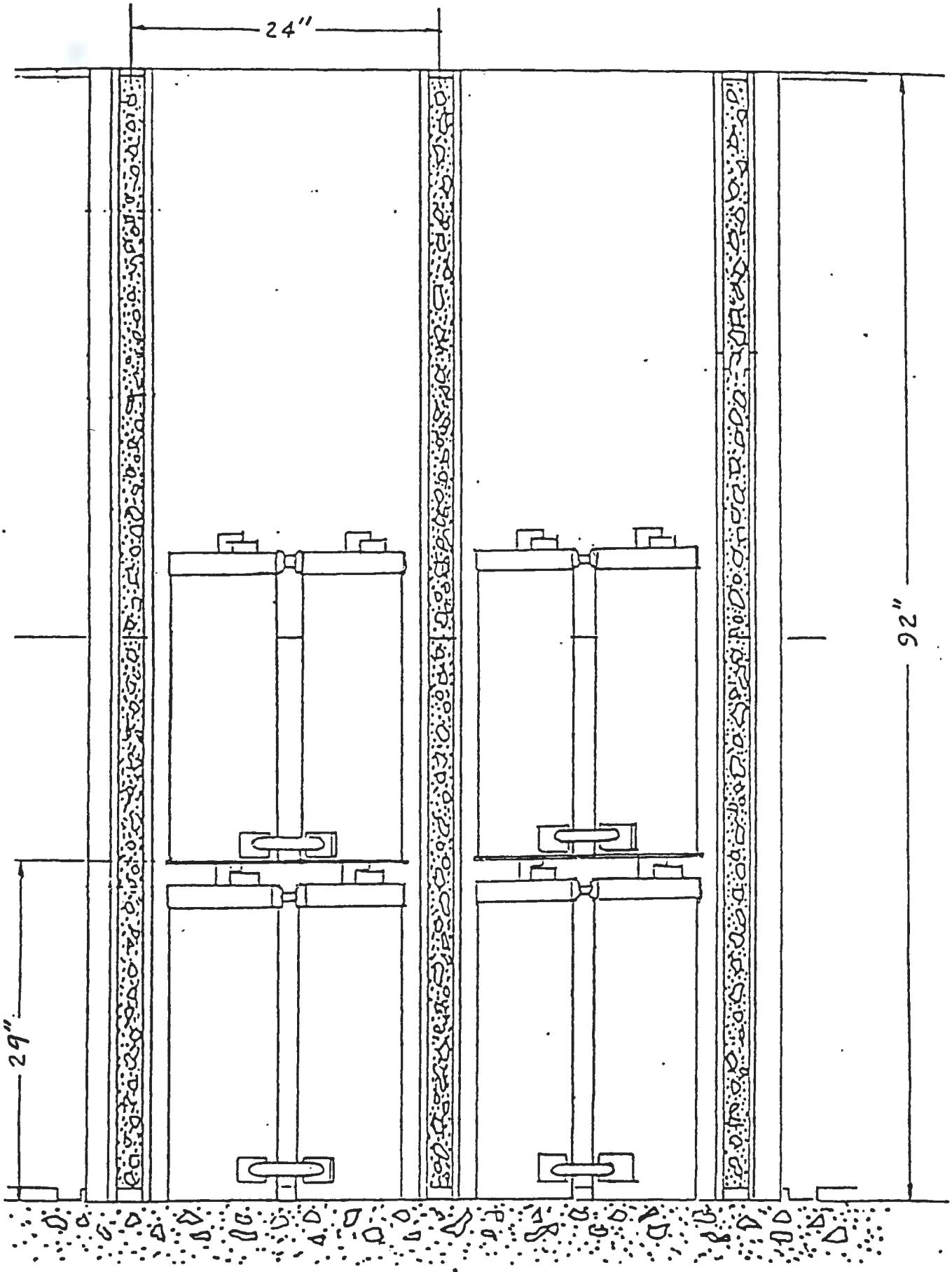

FUEL STORAGE CUBICLE
(CUTAWAY VIEW)

APPENDIX F

Sketches

ES-N040-S01	105KW Basin - Rack Arrangement
ES-N040-S02	105KW Basin - Rack Module
ES-N040-S03	105KW Basin - Rack Module
ES-N040-S04	105KW Basin - Rack Module
ES-N040-S05	Spent Fuel Canister Storage Rack
ES-N040-M01	Cooling Loop - 105KW Basin
ES-N040-M02	Sand Filler Loop - 105KW Basin

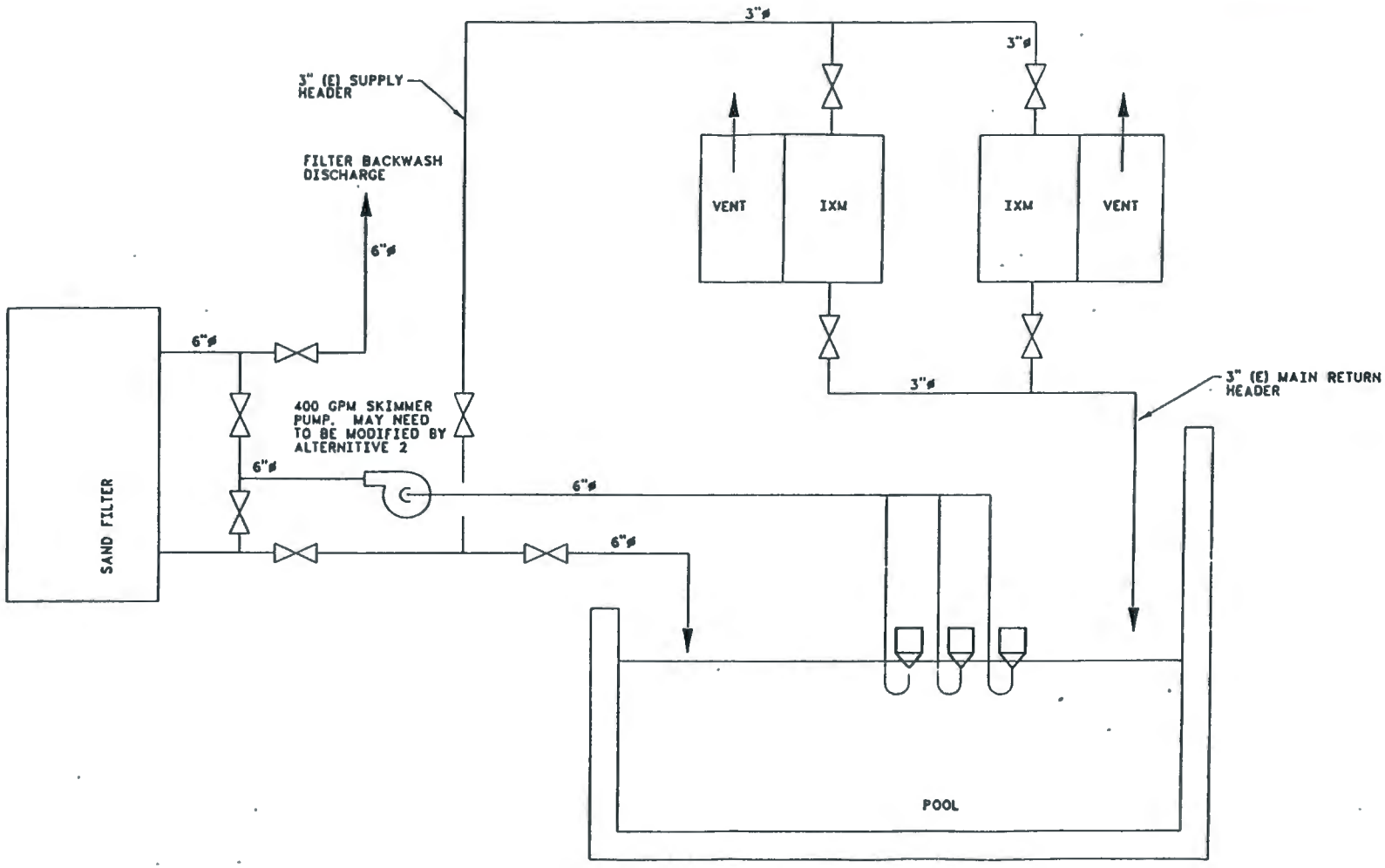

KAISER ENGINEERS HANFORD	Title SAND FILTER LOOP 105KW BASIN	
Prepared By S.R. BAILY	Checked By K. MERZOUK	Sketch No. ES-N040-M02

/USERS/PROJECTS/C116/ES-116-M02

KEH-443 (2-86) ACAD

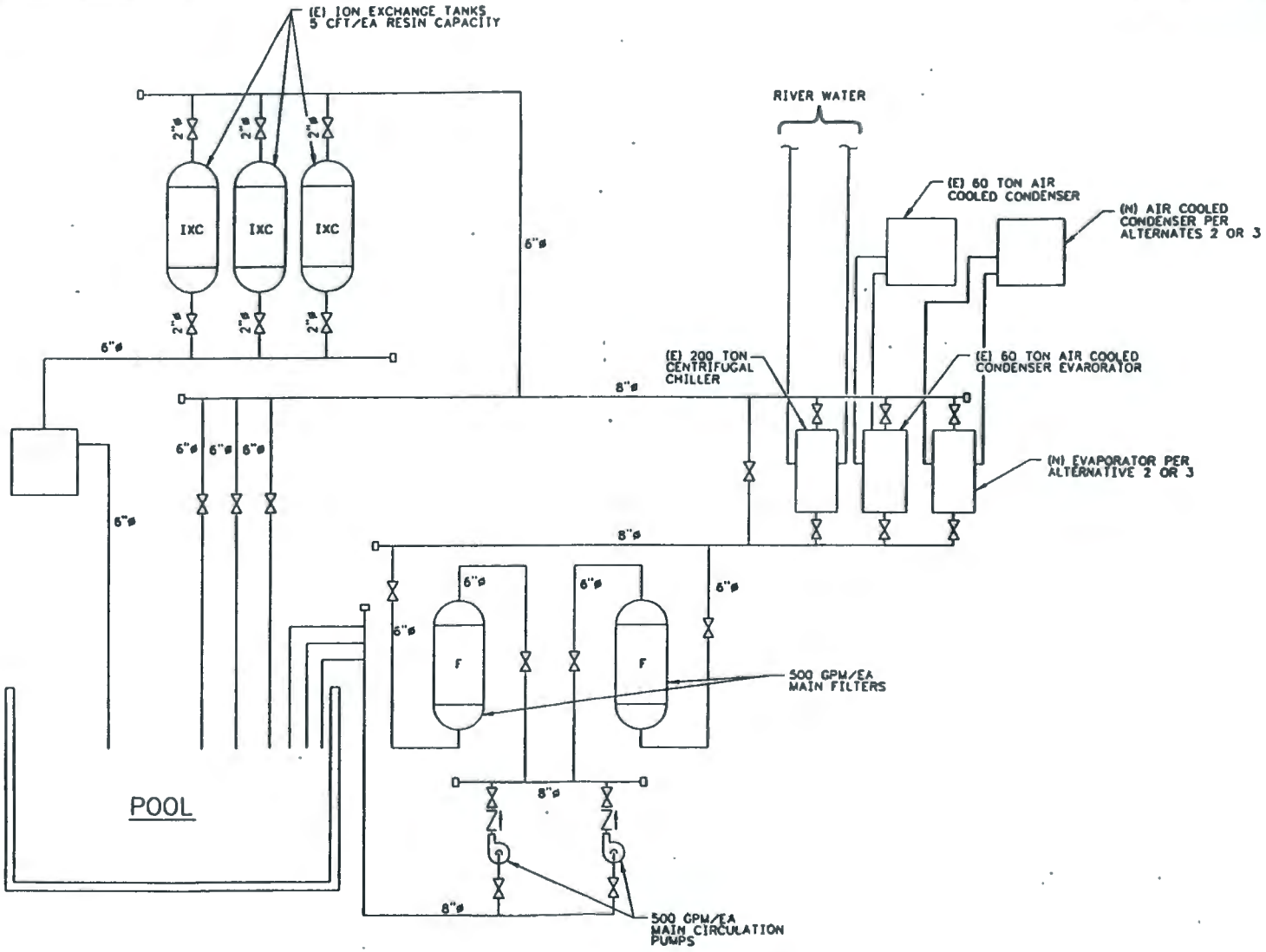

KAISER ENGINEERS HANFORD	Title: COOLING LOOP-105 KW BASIN	
Prepared By: RT BOWER	Checked By: K. MERZOUK	Sketch No. ES-N040-M01

NONE

KEH-443 12-86 ACAD

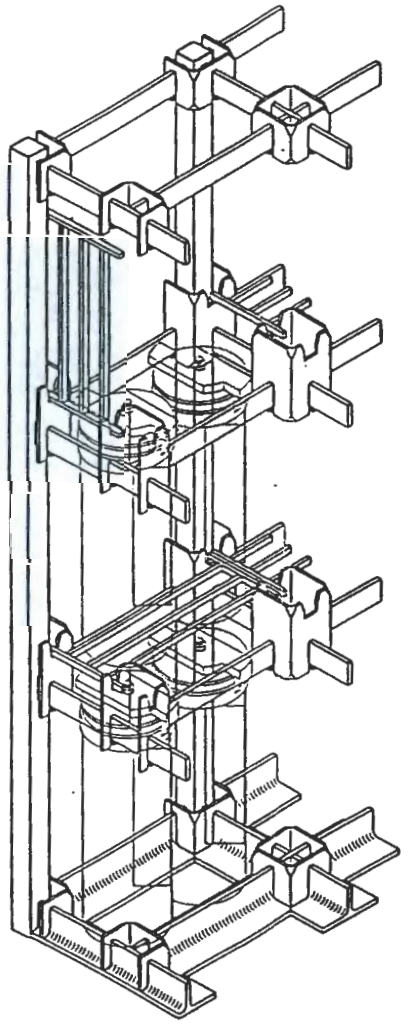

ICF KAISER HANFORD COMPANY	Title: SPENT FUEL CANISTER STORAGE RACK	
Prepared By: D. CHOU	Checked By: Wayne Adams	Sketch No.: ES-N040-S05

projects/er5281/er5281f

KEH-443 (2-86) ACAD

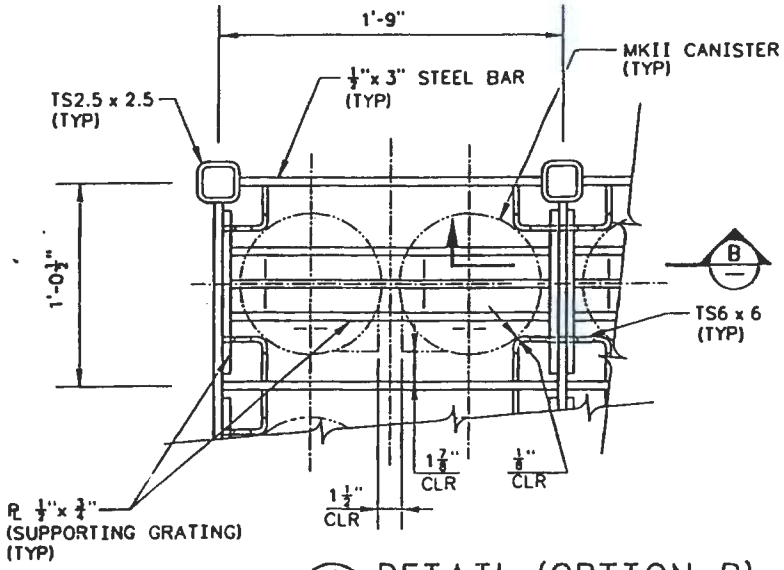

4 DETAIL (OPTION B)
ES-N040-S02 SCALE: NONE

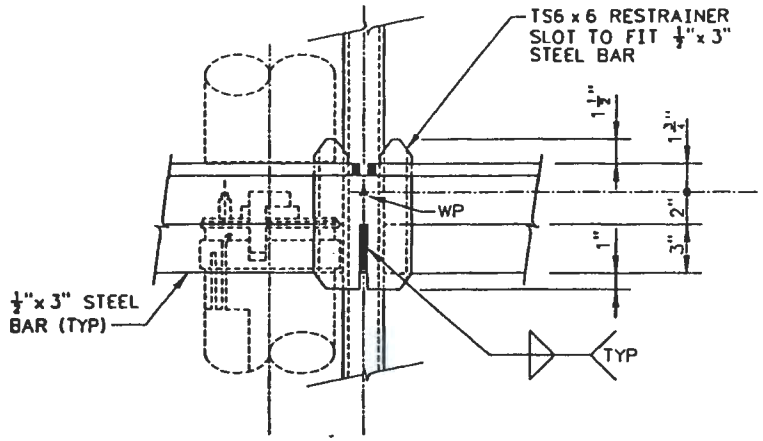

B SECTION
SCALE: NONE

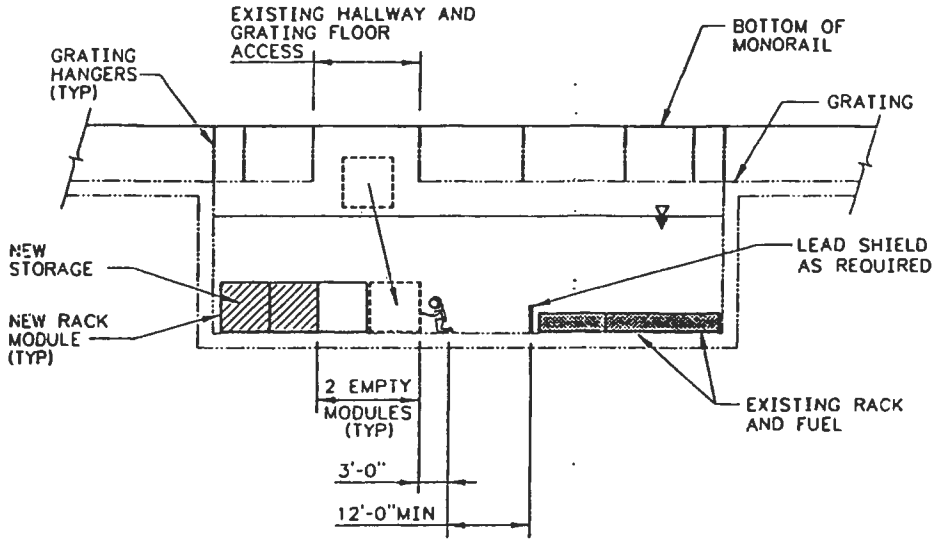

CONSTRUCTION PROCESS
SCALE: NONE

KAISER ENGINEERS HANFORD	Title 105KW BASIN - RACK MODULE	
Prepared By D. CHOU	Checked By Wayne Adal	Sketch No. ES-N040-S04

projects/er5281/er5281a

KEH-443 (2-86) ACAD

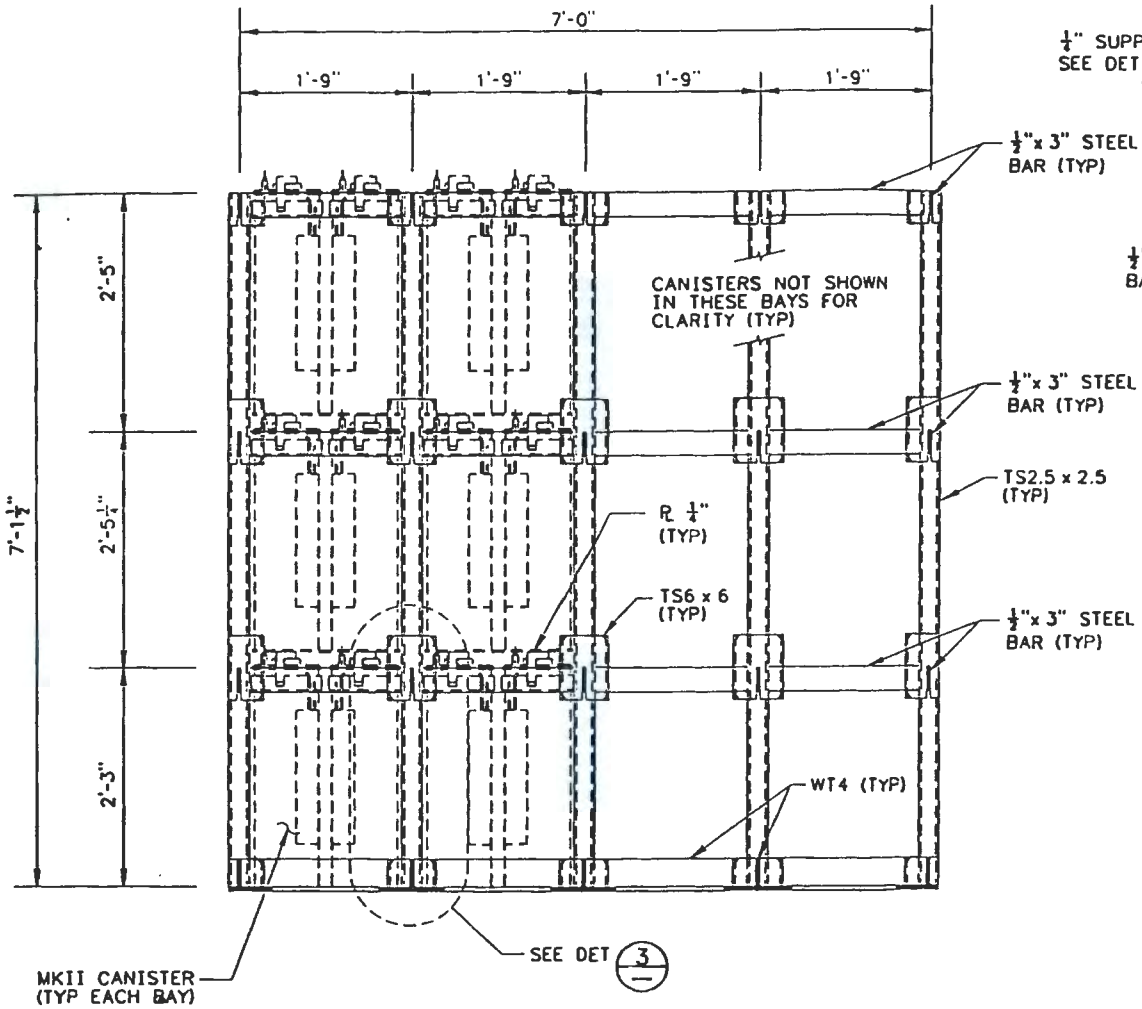

A SECTION
ES-N040-S02 SCALE: NONE

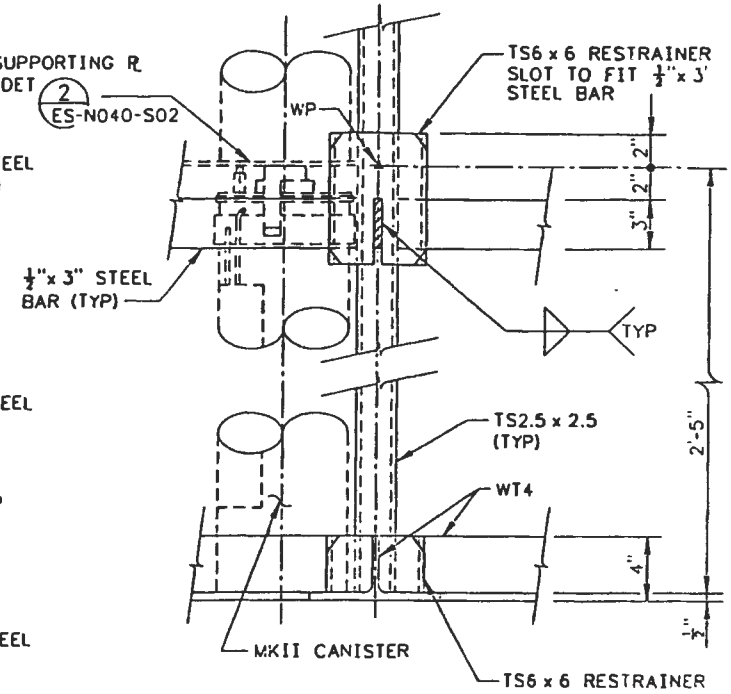

3 DETAIL
SCALE: NONE

KAISER ENGINEERS HANFORD	Title 105KW BASIN - RACK MODULE	
Prepared By D. CHOU	Checked By Wayne Adams	Sketch No. ES-N040-S03

projects/er5281/er5281c

KEH-443 (2-86) ACAD

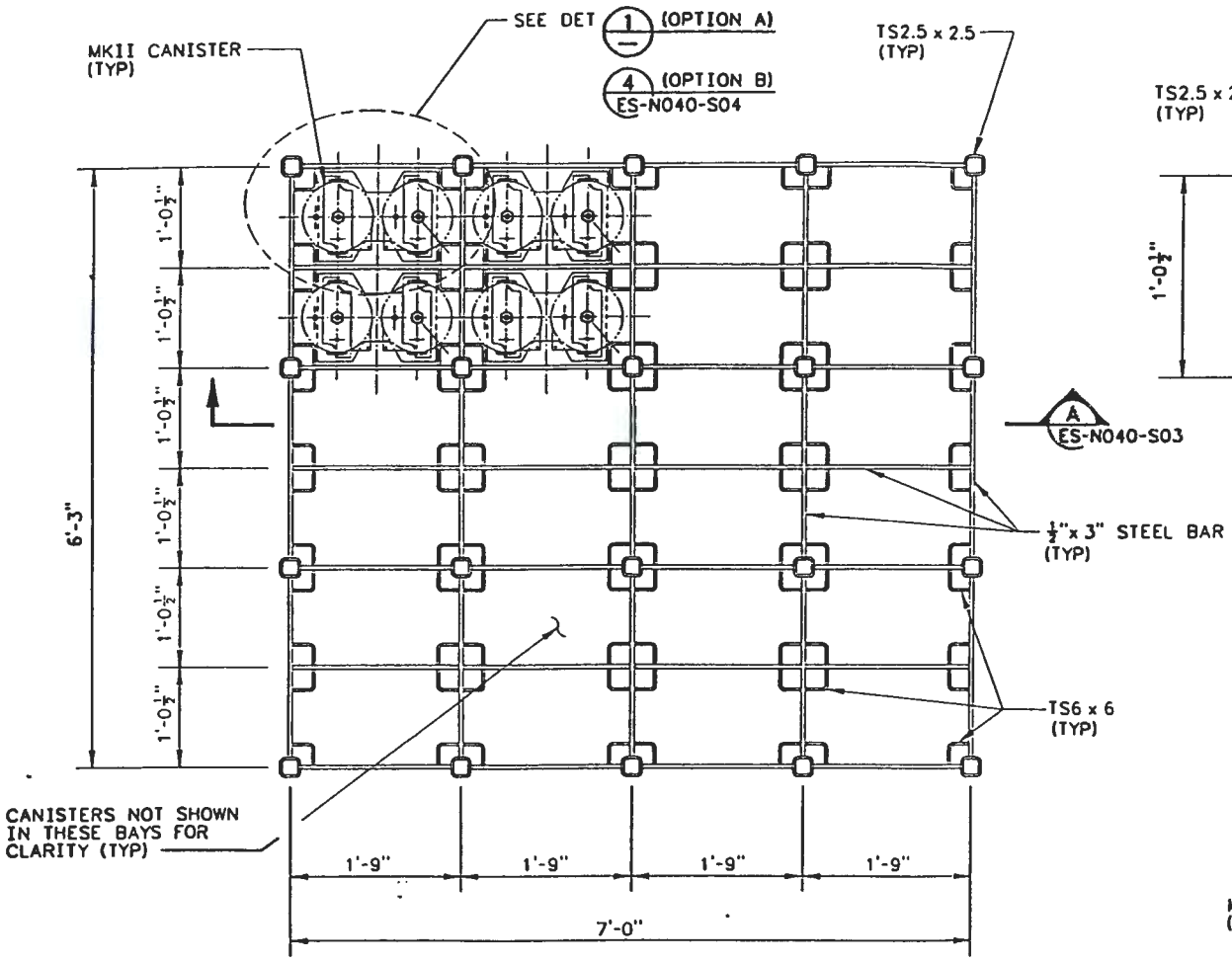

MODULE TYPE "A"
(OTHER MODULE TYPES ARE SIMILAR)

RACK MODULE PLAN

SCALE: NONE

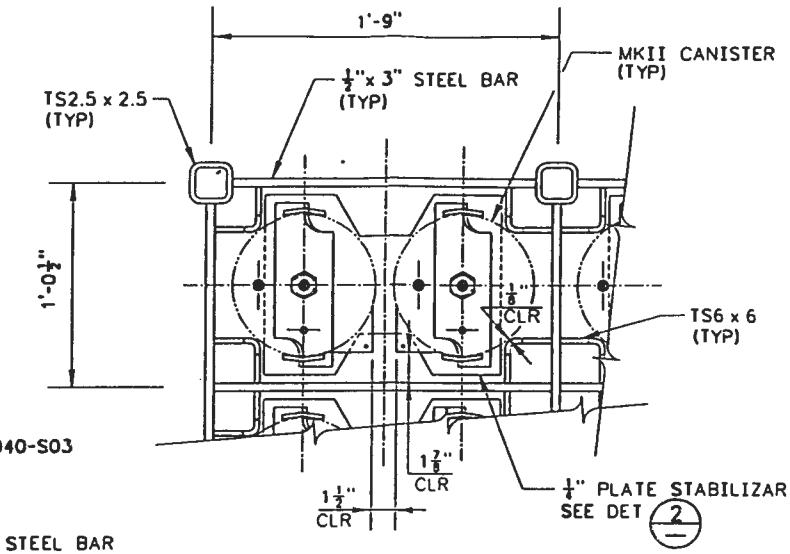

1 DETAIL (OPTION A)

SCALE: NONE

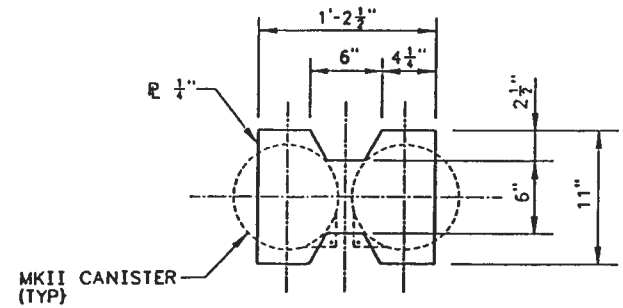

2 DETAIL

SCALE: NONE

NOTES:

1. TO INTERLOCK MODULES AT 4 CORNERS COLUMNS, TYPICAL.
2. PROVIDE CONTINUOUS SPACER STEEL ALONG EXISTING WALL BASE.

KAISER ENGINEERS HANFORD	Title: 105KW BASIN - RACK MODULE	
Prepared By: D. CHOU	Checked By: Wayne Adel	Sketch No. ES-N040-S02

projects/er5281/er5281b

KEH-443 (2-86) ACAD

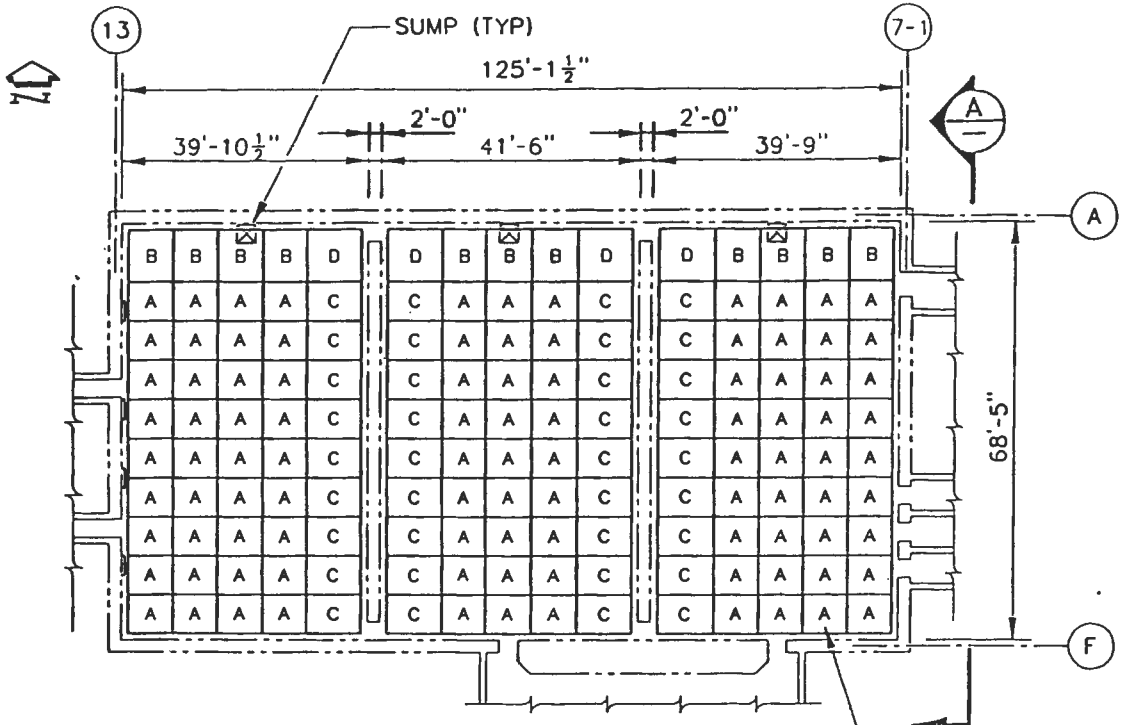

PLAN - 105KW STORAGE BASIN AND RACK MODULES

NTS

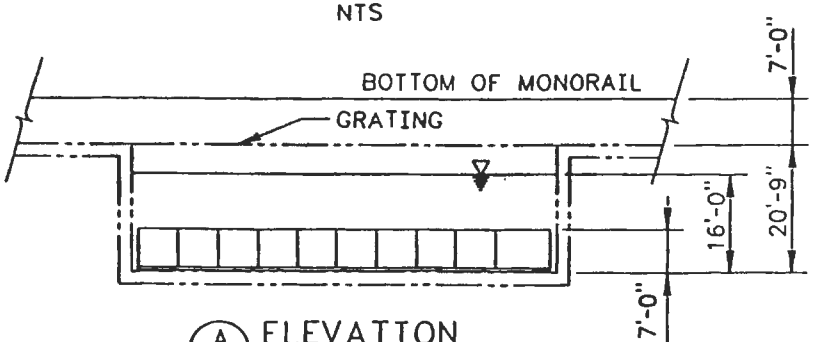

A ELEVATION

NTS

NOTES:

1. RACKS ARE ASTM A36 STEEL, PAINTED.
2. RACKS ARE SAFETY CLASS 1.
3. SEE PROJECT N040 ENGINEERING STUDY REPORT FOR DISCRIPTIONS OF THE EXISTING FACILITIES AND THE INVOLVED CONSTRUCTION ACTIVITES.
4. THE SKETCHES ARE CONCEPTUAL. THEY ARE TO SUPPORT FEASIBILITY STUDY AND BUDGETING PURPOSE.

KAISER ENGINEERS HANFORD	Title: 105KW BASIN - RACK ARRANGEMENT	
Prepared By: D. CHOU	Checked By: Wayne Adel	Sketch No. ES-N040-S01

projects/er5281/er5281a

KEH-443 (2-86) ACAD