0031272

OCT 1993
RECEIVED
EDMC

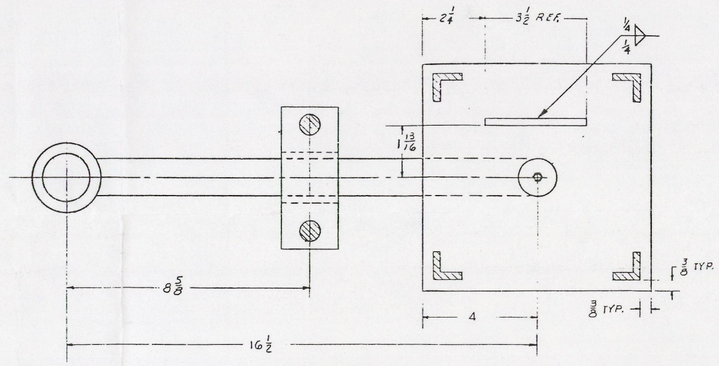

PLAN "A-A"

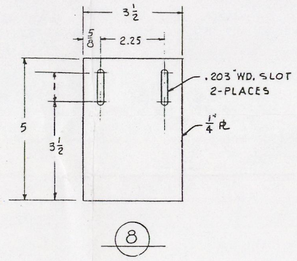

QTY.	PT. NO.	DESCRIPTION	
X	1.	ASSEMBLY	
1	2.	1" CONNECTOR ASS'Y. - TYPE-I GKT.	H-2-32410 PT. 5
A.R.	3.	1" SCH. 40 PIPE	ASTM-A312, 304-L
1	4.	1" SCH. 40, 90° L.R. EL.	ASTM-A403, 304-L
1	5.	PL-1 5/16" DIA. x 1/4" THK, 1/4" NPT HOLE AT CENTER	ASTM-A240, 304-L
2	6.	PL-8" SQ. x 1/4" THK.	↓
4	7.	L 1"x1" x 1/4" x 9 1/2" LG.	ASTM-A276, 304-L
1	8.	PL (SEE DETAIL)	ASTM-A240, 304-L
1	9.	PRESSURE SWITCH - HOUSED DIAPH., WATER TIGHT, DUAL CONTROL, 1/4" NPT	BARKSDALE NO. D2H-A8055
2	10.	SCREW - #10-24 UNC x 1/2" LG. PHILLIPS HD.	ANSI B18.6.3 ANY 300 SER. S.S.
2	11.	WASHER - #10 LOCK	ANSI B27.1 ANY 400 SER. S.S.
2	12.	NUT - #10-24 UNC	ANSI B18.6.3 ANY 400 SER. S.S.
1	13.	FLEXIBLE METAL HOSE - 3/8" NOM. I.D., S.S. W/(2) STD. W.T. 316 S.S. MALE NIPPLES 1/4" NPT	FLEXONICS HOSE TYPE 461 W/FTGS.
A.R.	14.	1" O.D. x 1/16" W. TUBING	ASTM-A269, 304-L
1	15.	LIFTING BAIL	H-2-30777
2	16.	PL - 2" x 3" x 1/4" THK.	ASTM-A240, 304-L

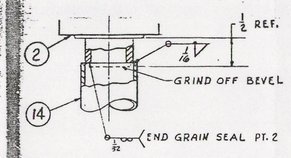

DETAIL-1

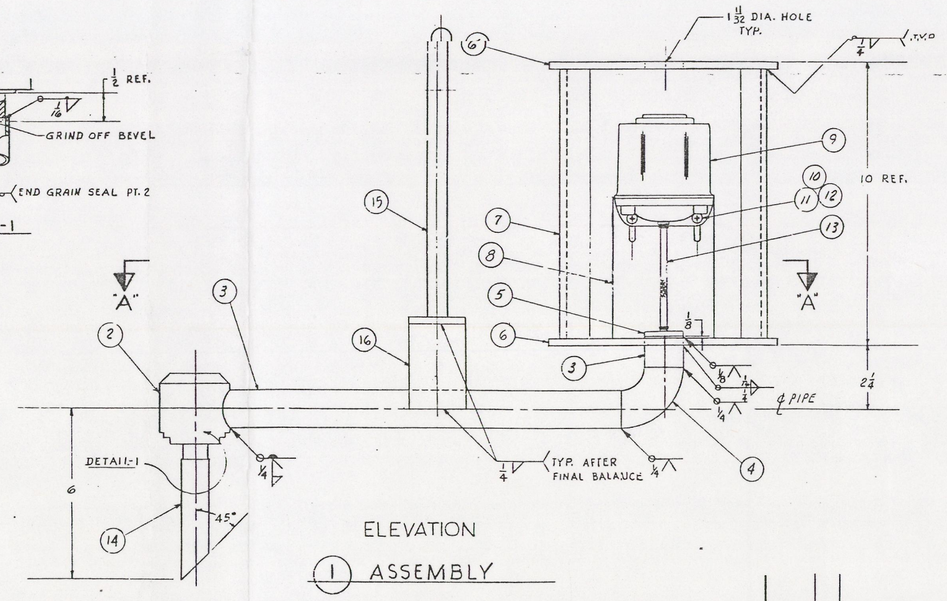
1 11/32 DIA. HOLE TYP.
TYP.
10 REF.
2 1/4
1/8
℄ PIPE
TYP. AFTER FINAL BALANCE
1/4
"A"
"A"
DETAIL-1
6
45°
1/4
1/8
1/4
1/4
1/4