STATE OF WASHINGTON
DEPARTMENT OF ECOLOGY
3100 Port of Benton Blvd • Richland, WA 99354 • (509) 372-7950
711 for Washington Relay Service • Persons with a speech disability can call (877) 833-6341

COVERSHEET
Proposed Permit Modification

For Letter 21-NWP-015 – Reissue
Dated February 2, 2021

Re: Proposed Class 3 Permit Modification 8C.2020.6D to the Hanford Facility Resource Conservation and Recovery Act Permit, Dangerous Waste Portion, Revision 8C, for the Treatment, Storage, and Disposal of Dangerous Waste, Part III, Operating Unit Group 4, 242-A Evaporator, WA7890008967

Due to the Governor's "Safe Start" Order, the Department of Ecology (Ecology) cannot distribute hard copy letters or enclosures, including DVDs, at this time. All letters are being sent electronically with embedded links to the enclosures.

The enclosures are on the Ecology website at https://ecology.wa.gov/Waste-Toxics/Nuclear-waste/Public-comment-periods.

After the Order is lifted, Ecology will send all hard copy letters and associated hard copy enclosures or DVDs as appropriate.

STATE OF WASHINGTON
DEPARTMENT OF ECOLOGY
3100 Port of Benton Blvd • Richland, WA 99354 • (509) 372-7950
711 for Washington Relay Service • Persons with a speech disability can call (877) 833-6341

February 2, 2021 21-NWP-015 – **Reissue**

Brian T. Vance, Manager
Office of River Protection
United States Department of Energy
PO Box 450, MSIN: H6-60
Richland, Washington 99352

John R. Eschenberg, President
Washington River Protection Solutions
PO Box 850, MSIN: H3-21
Richland, Washington 99352

Re: Proposed Class 3 Permit Modification 8C.2020.6D to the *Hanford Facility Resource Conservation and Recovery Act Permit, Dangerous Waste Portion, Revision 8C, for the Treatment, Storage, and Disposal of Dangerous Waste*, Part III, Operating Unit Group 4, 242-A Evaporator, WA7890008967

Reference: See page 3

Dear Brian T. Vance and John R. Eschenberg:

This letter is being reissued to correct the publication number in the first paragraph on the second page. The hyperlinks are also now clickable.

This letter transmits the Department of Ecology's (Ecology) proposed Class 3 Permit Modification 8C.2020.6D to Part III, Operating Unit Group 4, 242-A Evaporator, of the *Hanford Facility Resource Conservation and Recovery Act Permit, Dangerous Waste Portion, Revision 8C, for the Treatment, Storage, and Disposal of Dangerous Waste*.

The Permittees are the United States Department of Energy (USDOE) as owner/operator and Washington River Protection Solutions (WRPS) as co-operator.

USDOE proposed a Class 2 Permit Modification to the 242-A Evaporator on May 7, 2020 (Reference 1). USDOE held a public comment period from May 8, 2020, through July 7, 2020. A virtual public meeting was held on June 8, 2020. Ecology performed a completeness determination and a technical review following the 60-day public comment period.

In the review, Ecology identified two independent qualified, registered professional engineer (IQRPE) integrity assessments that should have been provided for Ecology's review. Since Ecology did not receive the integrity assessments in time to make a decision on the Class 2 Permit Modification, Ecology reclassified the modification to a Class 3. Due to missing permit documentation in support of the comment period (Reference 2), Ecology felt the documentation should be available for public review.

The design assessments are certified by an IQRPE, and are separated into two reports. They were submitted on August 26, 2020, as required by Washington Administrative Code (WAC) 173-303-640(3)(a). Ecology identified technical issues with the design assessment. Ecology worked with the Permittees to resolve these issues (Reference 3).

No revisions were made to the original Class 2 Permit Modification (Reference 1). However, the IQRPE design assessments are provided with this permit modification as supporting documentation.

Ecology received 13 public comments from USDOE's comment period. Ecology's *Response to Comments* document is on the enclosed DVD (Ecology Publication 21-05-006) and on Ecology's publication website at https://apps.ecology.wa.gov/publications/summarypages/2105006.html.

WAC 173-303-840(3)(d) requires a 45-day public comment period for the draft permit modification. Ecology will hold this public comment period from February 8, 2021, through March 25, 2021. This comment period initiates the second portion of the Class 3 Permit Modification. A public hearing is not scheduled, but Ecology will consider holding one if there is enough interest.

The proposed Class 3 Permit Modification would allow 242-A Evaporator to make facility changes to support installation of three new DST System transfer lines from AW-Farm. These proposed changes include drilling new penetrations through the wall, installing new wall nozzles, and reconfiguring jumpers in the pump room.

The proposed permit modification is on the enclosed DVD and on Ecology's website at https://ecology.wa.gov/Waste-Toxics/Nuclear-waste/Public-comment-periods. A DVD is also at the Hanford Public Information Repositories in Richland, Spokane and Seattle, Washington and in Portland, Oregon. A hard copy is on file at the locations below:

Department of Ecology Nuclear Waste Program 3100 Port of Benton Boulevard Richland, Washington 99354	United States Department of Energy Administrative Record 2440 Stevens Center Place Richland, Washington 99354

Individuals can request copies of the DVD and hard copies by contacting Ecology's Resource Center at (509) 372-7950.

If there are any questions, please contact Andrew Pomiak, 242-A Evaporator Permit Lead, at andrew.pomiak@ecy.wa.gov or (509) 372-7942, or Jeff Lyon, 242-A Evaporator Project Manager, at jeff.lyon@ecy.wa.gov or (509) 372-7914.

Sincerely,

Digitally signed by Schleif, Stephanie (ECY)

Stephanie Schleif
Deputy Program Manager
Nuclear Waste Program

ap/aa
Enclosure

cc: See page 4

References:

1. Letter 20-ECD-0018, dated May 6, 2020, "Submittal of Class 2 Permit Modification to the Hanford Facility Resource Conservation and Recovery Act Permit, Dangerous Waste Portion for the 242-A Evaporator [T-2-6]"
2. Letter 20-NWP-150, dated September 4, 2020, "Reclassification of Proposed Class 2 Permit Modification C2-242-A-2020-01 to the Hanford Facility Resource Conservation and Recovery Act Permit, Dangerous Waste Portion, Revision 8C, for the Treatment, Storage, and Disposal of Dangerous Waste, Part III, Operating Unit Group 4, 242-A Evaporator WA7890008967"
3. Letter 21-NWP-004, dated January 8, 2021, "Closing the Technical Review of C2-242-A-2020-01, the 242-A Evaporator Class 3 Permit Modification for Wall Penetrations the Hanford Facility Resource Conservation and Recovery Act Permit, Dangerous Waste Portion, Revision 8C, for the Treatment, Storage, and Disposal of Dangerous Waste, Part III, Operating Unit Group 4, 242-A Evaporator WA7890008967"

cc electronic w/o enc:

Dave Bartus, EPA
David Einan, EPA
Mary Beth Burandt, USDOE-ORP
Rana Evans, USDOE-ORP
Lori Huffman, USDOE-ORP
Christopher Kemp, USDOE-ORP
Glyn Trenchard, USDOE-ORP
Duane Carter, USDOE-RL
Mostafa Kamal, USDOE-RL
Tony McKarns, USDOE-RL
Brian Stickney, USDOE-RL
Sheila David, BNI
Brittany Sparks, BNI
Robert Bullock, CHPRC
Moussa Jaraysi, CHPRC
Curt Clement, MSA
Jon Perry, MSA
Darci Teel, MSA
Michael Stephenson, PNNL
Eric Van Mason, WRPS
Suzette Thompson, WRPS
ERWM Staff, YN
Debra Alexander, Ecology
Jennifer Cantu, Ecology
Annette Carlson, Ecology
Suzanne Dahl. Ecology
Katie Hall, Ecology
Mandy Jones, Ecology
Steve Lowe, Ecology
Jeff Lyon, Ecology
Nina Menard, Ecology
Andrew Pomiak, Ecology
John Price, Ecology
Stephanie Schleif, Ecology
Dan Thompson, Ecology

cc electronic w/enc and DVD:

Tim Hamlin, EPA
Lori Huffman, USDOE-ORP
Tony McKarns, USDOE-RL
Sheila Davis, BNI
Brittany Sparks, BNI
Mason Murphy, CTUIR
Jack Bell, NPT
Rex Buck Jr., Wanapum
Laurene Contreras, YN
Susan Leckband, HAB
David Reeploeg, Hanford Communities
Max Woods, ODOE
Robin Priddy, BCAA
Matthew Drumheller, USACE
Trevor Fox, USFW
Mike Livingston, WDFW
John Martell, WDOH
John Wiesman, WDOH
Randy Treadwell, WSDA
Allyson Brooks, WSDAHP
Cindy Preston, WSDNR
BNI Correspondence Control
CHPRC Correspondence Control
Environmental Portal
EPA Region 10 Hanford Field Office, Correspondence Control
Gonzaga University Foley Center Library
Hanford Administrative Record, Hanford Site-wide Permit
Hanford Facility Operating Record
MSA Correspondence Control
NWP RIM Coordinators, Ecology
PNNL Correspondence Control
Portland State University Library, Government Information
University of Washington Suzzallo Library, Government Publications
USDOE-ORP Correspondence Control
USDOE Public Reading Room, CIC
USDOE-RL Correspondence Control
WRPS Correspondence Control

cc w/enc, DVD and hard copy:

Hanford Administrative Record: Hanford Site-wide Permit
NWP Central File

DEPARTMENT OF ECOLOGY
State of Washington

242-A Evaporator Class 3 permit modification

New wall penetrations

- Public comment period Feb. 8 – Mar. 25, 2021.
- Modification proposes facility upgrades associated with accepting new waste transfer lines from the Double-Shell Tank (DST) System.
- Reclassified from a Class 2 to a Class 3 permit modification to allow public review of additional information.

Public comment invited

The Washington State Department of Ecology (Ecology) is proposing a change to the Hanford Facility Resource Conservation and Recovery Act Permit, Revision 8C.

This change affects the Dangerous Waste Portion for the Treatment, Storage, and Disposal of Dangerous Waste for the 242-A Evaporator.

The permittees are:

U.S. Department of Energy
Office of River Protection
P.O Box 450
Richland, WA 99352

Washington River Protection Solutions
P.O. Box 850
Richland, WA 99352

This modification proposes allowing facility upgrades associated with the new waste transfer lines from the Double-Shell Tank (DST) System to the 242-A Evaporator. The original transfer lines failed pressure tests in 2018 and must be replaced. Specifically, this modification allows penetrating a wall to install the transfer lines and to perform modifications in the pump-room. These new transfer lines will allow 242-A Evaporator to continue to treat DST waste, reducing DST waste volume, and allowing for continued Single-Shell Tank waste retrievals.

The transfer lines themselves are administratively controlled by the DST system and are being built under applicable interim status regulations. Construction of the lines is not a part of this permit modification.

Background

The Hanford Site occupies 560 square miles in southeastern Washington State. Beginning in 1943, the site produced plutonium for the nation's defense program. Plutonium production ceased in the late 1980s. Today, waste management and environmental cleanup are the primary missions at Hanford.

Reclassifying to a Class 3 permit modification

Originally proposed as a Class 2 permit modification, USDOE-ORP and WRPS held a 60-day comment period from May 8, 2020, through July 7, 2020. Ecology received 13 public comments at that time. Responses to those comments are attached to this permit modification as a Response to Comments Document.

During the technical review for the Class 2 permit modification, Ecology requested the permittees submit the final independent qualified registered professional engineer (IQRPE) design assessment associated with the modification. Once received, Ecology performed a review and identified deficiencies with the assessment. Since the deficiencies were not resolved in time to approve the modification, Ecology reclassified the Class 2 permit modification to a Class 3 permit modification. In addition, Ecology felt that members of the public should have the opportunity to review the IQRPE design assessment with the draft permit modification. Reclassification of a Class 2 into a Class 3 permit modification requires an additional 45-day comment period.

IQRPE Design Assessments

Ecology is including the IQRPE design assessment as part of this permit modification for public review. In addition to the IQRPE design assessment, the draft permit documents from the original Class 2 permit modification are included. All deficiencies identified by Ecology have been resolved. The IQRPE design assessment provide information on the integrity of the tank system for the 242-A Evaporator associated with the wall penetrations.

Figure 1 Sign in front of the 242-A Evaporator facility

Reviewing the proposed changes

Ecology invites you to review and comment on this proposed 242-A Evaporator Class 3 permit modification. See the back page for comment period dates and information on how to submit comments.

Copies of the application for the proposed permit and supporting documentation will be available during the public comment period online at Ecology's website at Ecology.wa.gov/Waste-Toxics/Nuclear-waste/Public-comment-periods. The documents will also be available at the Hanford Public Information Repositories listed on the next page.

Ecology will consider and respond to all significant comments received during the public comment period. We will document our responses and issue a response to comments document when we make our final permitting decision.

Hanford's Information Repositories

Ecology Nuclear Waste Program
Resource Center
3100 Port of Benton Blvd.
Richland, WA 99354
509-372-7950

U.S. Department of Energy
Administrative Record
2440 Stevens Drive, Room 1101
Richland, WA 99354
509-376-2530

Washington State University Tri-Cities
Department of Energy Reading Room
2770 Crimson Way, Room 101L
Richland WA 99354

University of Washington
Suzzallo Library
P.O. Box 352900
Seattle, WA 98195
206-543-5597

Gonzaga University
Foley Center
502 E Boone Avenue
Spokane, WA 99258
509-313-6110

Portland State University
Millar Library
1875 SW Park Avenue
Portland, OR 97207
503-725-4542

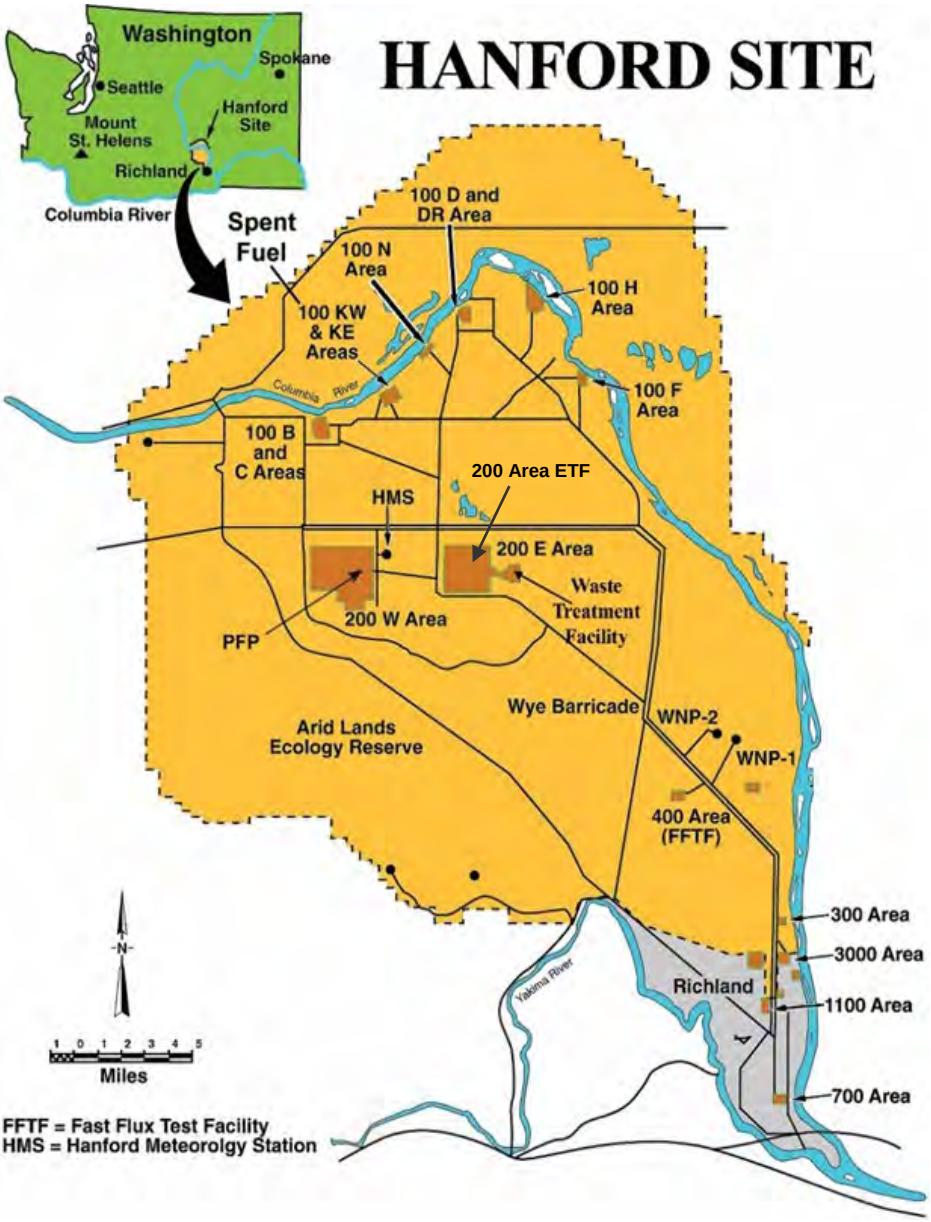

3100 Port of Benton Blvd
Richland WA 99354

242-A Class 3 permit modification

Public comment period
Feb. 8 – Mar. 25, 2021

Electronic submission (preferred):
http://nw.ecology.commentinput.com/?id_x2KU7

Mail or hand delivery

Daina McFadden
3100 Port of Benton Blvd
Richland, WA 99354

A public hearing is not scheduled, but if there is enough interest, we will consider holding one. To request a hearing or for more information, contact:

Daina McFadden
509 372 7950
Hanford@ecy.wa.gov

To request an ADA accommodation, contact Ecology by phone at 509 372 7950, email at Daina.McFadden@ecy.wa.gov, or visit https://ecology.wa.gov/accessibility. For Relay Service or TTY call 711 or 877 833 6341.

DEPARTMENT OF
ECOLOGY
State of Washington

FACT SHEET

Proposed Permit Modification, 8C.2020.6D, of the *Hanford Facility Resource Conservation and Recovery Act Permit, Dangerous Waste Portion, Revision 8C, for the Treatment, Storage, and Disposal of Dangerous Waste,* WA7890008967, Part III, Operating Unit Group 4, 242-A Evaporator

February, 2020

This page is intentionally left blank.

FACT SHEET

Proposed Permit Modification, 8C.2020.6D, to Part III of the *Hanford Facility Resource Conservation and Recovery Act Permit, Dangerous Waste Portion, Revision 8C, for the Treatment, Storage, and Disposal of Dangerous Waste*, WA7890008967, Operating Unit Group 4, 242-A Evaporator

PERMITTEES

United States Department of Energy
Office of River Protection
PO Box 450, MSIN: H6-60
Richland, Washington 99352

Washington River Protection Solutions
PO Box 850, MSIN: H3-04
Richland, Washington 99352

The Washington State Department of Ecology (Ecology) developed this Fact Sheet in accordance with the requirements of Washington Administrative Code (WAC) 173-303-840(2)(f). Its purpose is to discuss the proposed draft permit modification to Part III of the *Hanford Facility Resource Conservation and Recovery Act Permit, Dangerous Waste Portion, Revision 8C, for the Treatment, Storage, and Disposal of Dangerous Waste* (hereafter called the Hanford Site-wide Permit).

This proposed draft permit modification will add the following to Operating Unit Group 4, 242-A Evaporator, to Part III of the Hanford Site-wide Permit: allow for facility changes supporting the construction and installation of three new transfer lines from the Double-Shell Tank (DST) System, AW-Farm.

This Fact Sheet is divided into six sections:

1.0 Hanford Site-wide Permit Background
2.0 242-A Evaporator Dangerous Waste Management Unit Description
3.0 Class 3 Permit Modification Process for 242-A Evaporator
4.0 Proposed Modification to Part III of the Hanford Site-wide Permit
5.0 Procedures for Reaching a Final Decision on the Draft Permit Modification
6.0 State Environmental Policy Act

1.0 Hanford Site-wide Permit Background

Ecology's Nuclear Waste Program (NWP) manages dangerous waste within the State by writing permits to regulate its treatment, storage, and disposal.

Ecology has the authority to regulate dangerous waste and the dangerous waste components of mixed (radioactive and dangerous) waste, under 70.105 Revised Code of Washington (RCW) and WAC 173-303. The Hanford Site-wide Permit has requirements for the treatment, storage, and disposal of dangerous and mixed waste at Hanford. Ecology does not regulate waste that is solely radioactive. United States Department of Energy (USDOE) has the exclusive authority to regulate radioactive materials and radioactive waste at Hanford.

Ecology first issued the Hanford Site-wide Permit in 1994. Since 1994, the permit has been modified many times to incorporate changes or updates and to incorporate and closeout several Dangerous Waste Management Units (DWMUs).

The Hanford Site-wide Permit provides standard and general facility conditions, as well as unit group conditions for the operation, closure, and post-closure care of mixed and dangerous waste Treatment, Storage and Disposal (TSD) Units at Hanford. These TSDs are administratively grouped into operating, closure, or post-closure unit groups in the Hanford Site-wide Permit. Each unit group may contain one or more DWMUs.

The Hanford Site-wide Permit is organized as follows:

Part I	Standard Conditions
Part II	General Facility Conditions
Part III	Operating Units
Part IV	Corrective Action for Past Practice Units
Part V	Closure Units
Part VI	Post-Closure Units

Upon approval and issuance of this permit modification 242-A Evaporator will make facility changes to support install of three new DST System transfer lines from AW-Farm. These proposed changes include drilling new penetrations through the wall, installing new wall nozzles, and reconfiguring jumpers in the pump room.

2.0 242-A Evaporator Operating Unit Group Description

The 242-A Evaporator consists of a conventional forced circulation tank system, providing treatment to DST waste, and tank storage of process condensate generated during the evaporation process. The 242-A Evaporator receives waste from the DST AW-102, called supernate, evaporates volatile compounds, routes the condensed tank waste, now called slurry, back to AW-102. In addition, the 242-A Evaporator condenses the evaporatorated compounds, collects and stores the condensate, and transfers the condensate to the Liquid Effluent Retention Facility for further treatment.

Type and Quantity of Waste

The type and quantity of waste treated and stored at the 242-A Evaporator can be found in the 242-A Evaporator Chapter 1, "Part A Form" located at the Ecology website, here.

Basis for Permit Conditions

This permit modification includes the addition of draft permit conditions requiring the permittees to submit to Ecology:

- A tightness test for the new transfer lines.
- An installation assessment for the new penetrations/wall nozzles and the new pump room jumpers.

A draft permit condition is also added requiring periodic assessment of the new transfer line wall penetrations at a frequency of every 10 years.

3.0 Class 3 Permit Modification Process for the 242-A Evaporator Operating Unit Group

The permittees originally proposed this permit modification as a Class 2, submitted on May 6, 2020. During the Class 2 permit modification, the permittees held a 60-day public comment period from May 8, 2020 to July 7, 2020. Thirteen comments were collected, and responses to these comments are included in this draft permit modification. Additionally, the permittees held a virtual public meeting on June 8, 2020 with 39 counted attendees.

During review of the Class 2 permit modification, Ecology expressed concern that a structural design assessment for the new penetrations/wall nozzles, reviewed and certified by an independent qualified registered professional engineer (IQRPE), required by WAC 173-303-640(3)(a), was not submitted with the formal package. The permittees agreed to provide the assessment to Ecology prior to the deadline for approving, denying, or reclassifying the modification in accordance with WAC 173-303-830(4)(b)(vi)(A). The permittees were not able to meet the original date to provide the assessment, so Ecology extended the decision period by 30 days on August 4, 2020 in accordance with WAC 173-303-830(4)(b)(vi)(A)(V).

Once received, Ecology performed a review on the assessment. In the course of that review, Ecology identified that there was another design assessment for the new jumpers in the pump room which had also not been provided. USDOE subsequently provided that design assessment. There were deficiencies identified in both design assessments. Since the deficiencies were not resolved in time to approve the modification, Ecology reclassified the Class 2 permit modification to a Class 3 permit modification on September 4, 2020. In addition, Ecology felt that members of the public should have the opportunity to review the IQRPE design assessment with the draft permit modification.

The deficiencies included that IQRPE design assessment did not address the structural adequacy of the new penetrations/wall nozzles and new jumpers. The permittees amended the design assessment to show that a structural engineer participated in the design assessment. According to WAC 173-303-040, an IQRPE is, "an engineer with expertise in the specific area for which a certification is given." Once the permittees addressed Ecology's concerns on the IQRPE design assessment, the technical review was closed.

4.0 Proposed Modification to Part III of the Hanford Site-wide Permit

Class 3 permit modification 8C.2020.6D proposes to allow 242-A Evaporator to perform facility upgrades associated with accepting new waste transfer lines from the DST System. The original transfer lines did not pass pressure tests in 2018 and need to be replaced. Specifically, this modification allows the facility to drill new penetrations to accept the transfer lines and to perform jumper modifications in the pump room. These new transfer lines will allow 242-A Evaporator to continue to treat DST waste, reducing DST waste volume, and allowing for continued Single-Shell Tank waste retrievals.

Permit documents included in this draft permit modification include:

- Chapter 4.0, Process Information.
- Permit Conditions.
- IQRPE Design Assessment, RPP-IQRPE-50066 and RPP-IQRPE-50067.

5.0 Procedures for Reaching a Final Decision on the Draft Permit Modification

The Washington State Dangerous Waste Regulations in WAC 173-303-830 describe the types of changes or modifications that may be made to a Dangerous Waste Permit issued by Ecology.

This draft permit modification was prepared according to the procedures in WAC 173-303-840(2). As required by WAC 173-303-840(3)(d), draft permits issued by Ecology will have at least a 45-day public comment period. The public comment period for this draft permit will be February 8, 2020 through March 25, 2020.

Comments must be post-marked, received by e-mail, or hand-delivered no later than close of business (5:00 p.m. PST) March 25, 2020.

Direct all comments to (electronic preferred):

Daina McFadden
Washington State Department of Ecology
3100 Port of Benton Boulevard
Richland, Washington 99354

eComments link: http://nw.ecology.commentinput.com/?id=x2KU7

Ecology will consider and respond to all written comments on this draft permit modification that are submitted by the March 25, 2020 deadline. At the completion of the 45-day public comment period Ecology will make a final permitting decision. If the final decision is to issue the permit, Ecology will issue a final permit for Part III, OUG 4, 242-A Evaporator to the Permittees, that will become effective 30 days after the issuance date. If the final decision includes substantial changes to the draft permit modification because of public comment, Ecology will consider initiating a new public comment period.

A public hearing is not scheduled, but if there is enough interest, we will consider holding one.

To request a hearing or for more information contact:

Daina McFadden
Washington State Department of Ecology
(509) 372-7950

E-mail address: hanford@ecy.wa.gov

Ecology will also issue a Response to Comments document to the Permittees and the public upon issuance of the final permit. The final permit modification may be appealed within 30 days after issuance. If there is no appeal, the permit will be effective 30 days following issuance.

At this time, **Ecology's offices are currently not open for in-person permit document reviews.** When in-person reviews become available again, Ecology will let you know. In the meantime, you can still view permit records on the Ecology website at https://ecology.wa.gov/Waste-Toxics/Nuclear-waste/Public-comment-periods. To view documents at the other Hanford Public Information Repositories, including the USDOE Administrative Record at 2440 Stevens Drive, please contact those facilities for access to public comment period documents.

If you have difficulty accessing documents on the Ecology website or at the other Public Information Repositories, we will work with you to arrange a way to provide records to you electronically or hard copy.

Members of the public can request a DVD or hard copy of the proposed permit modification or receive additional information by calling (509) 372-7950 or sending an e-mail to hanford@ecy.wa.gov. This approach is consistent with Washington State Department of Ecology offices across the state.

Copies of the documents for Part III, Operating Unit Group 4, 242-A Evaporator are available for review at the Hanford Public Information Repositories locations listed below:

Hanford Public Information Repositories and Administrative Records

Richland, Washington

Ecology Nuclear Waste Program Resource Center
3100 Port of Benton Blvd.
Richland, WA 99354
(509) 372-7950

U.S. Department of Energy Administrative Record
2440 Stevens Drive, Room 1101
Richland, WA 99354
(509) 376-2530

Washington State University Tri-Cities
Department of Energy Reading Room
2770 Crimson Way, Room 101L
Richland, WA 99354
(509) 375-7443

Other Locations:

Portland

Portland State University
Branford Price Millar Library
1875 Southwest Park Avenue
Portland, Oregon 97201
(503) 725-4542

Spokane

Gonzaga University
Foley Center
502 East Boone Avenue
Spokane, Washington 99258
(509) 313-6110

Seattle

University of Washington Suzzallo Library
P.O. Box 352900
4000 15th Avenue Northeast
Seattle, Washington 98195
(206) 543-5597

Information on the proposed permit modification is also available online at http://www.ecy.wa.gov/programs/nwp/commentperiods.htm. If special accommodations are needed for public comment, contact Ecology's Nuclear Waste Program at (509) 372-7950.

6.0 State Environmental Policy Act

Ecology has prepared a Determination of Significance and Notice of Adoption of exisiting environmental documents for this permit modification. The two documents being adopted are the *Final Tank Closure & Waste Management (TC&WM) Environmental Impact Statement (EIS*) (DOE/EIS-0391) and *Final Tank Waste Remediation System (TWRS) Environmental Impact Statement (EIS)* (DOE/EIS-0189).

Ecology previously issued a State Environmental Policy Act (SEPA) Determination of Non-Significance for permitting 242-A Evaporator on December 12, 1997.

Additional evaluation of the potential adverse environmental impacts of the 242-A Evaporator was done in the *TWRS EIS* (DOE/EIS-0189), and the *TC&WM EIS* (DOE/EIS-0391). For the current proposal, Ecology is also incorporating by reference the more detailed evaluation of the 2010 Final Environmental Assessment (EA), *Upgrades and Life Extension of the 242-A Evaporator* (EA-1682).

Ecology has determined these proposals are likely to have a significant adverse impact on the environment. To meet the requirements of RCW 43.21C.030(2)(c), Ecology is adopting the portions of the documents described above. Under WAC 197-11-360, there will be no scoping process for this EIS.

Ecology identified and adopted the portions of the documents as being appropriate for these proposals after independent review. These portions of the documents meet environmental review needs for the current proposal and will accompany the proposal to the decision maker. The lead agency will not act on this proposal until completion of the public comment period on the Dangerous Waste Regulations (DWR) permit modification, in accordance with WAC 173-303-840.

The Determination of Significance and Notice of Adoption is available online at the SEPA Register, SEPA#202100164.

This page intentionally left blank.

242-A EVAPORATOR
CHANGE CONTROL LOG

Change Control Logs ensure that changes to this unit are performed in a methodical, controlled, coordinated, and transparent manner. Each unit addendum will have a "**Last Modification Date**" which represents the last date the portion of the unit has been modified. The "**Modification Number**" represents Ecology's method for tracking the different versions of the permit. This log will serve as an up to date record of modifications and version history of the unit.

Last modification to 242-A Evaporator **June 24, 2020**

Chapters	Last Modification Date	Modification Number
Unit-Specific Conditions	06/24/2020	8C.2020.5F
1.0 Part A Form	11/12/2019	8C.2019.4F
2.0 Reserved		
3.0 Waste Analysis Plan	11/12/2019	8C.2019.4F
4.0 Process Information	11/12/2019	8C.2019.4F
5.0 Reserved		
6.0 Procedures to Prevent Hazards	11/12/2019	8C.2019.4F
7.0 Contingency Plan	06/24/2020	8C.2020.5F
8.0 Personnel Training	09/30/2013	
9.0 Reserved		
10.0 Reserved		
11.0 Closure	09/30/2013	

DRAFT

This page intentionally left blank.

DRAFT

242-A EVAPORATOR
PART III, OPERATING UNIT GROUP 4
UNIT-SPECIFIC PERMIT CONDITIONS

CHANGE CONTROL LOG

Change Control Logs ensure that changes to this unit are performed in a methodical, controlled, coordinated, and transparent manner. Each unit addendum will have its own change control log with a modification history table. The "**Modification Number**" represents Ecology's method for tracking the different versions of the permit. This log will serve as an up to date record of modifications and version history of the unit.

Modification History Table

Modification Date	Modification Number
06/24/2020	8C.2020.5F
11/12/2019	8C.2019.4F
04/30/2019	PCN-242-A-2019-01 (8C.2019.Q2)
04/09/2018	PCN-242-A-2017-02 (8C.2018.Q2)
11/16/2017	8C.2017.5F
07/19/2017	8C.2017.Q2
04/26/2017	8C.2017.Q1
02/18/2016	8C.2015.Q4

DRAFT

This page intentionally left blank.

DRAFT

242-A EVAPORATOR
PART III, OPERATING UNIT GROUP 4
UNIT-SPECIFIC PERMIT CONDITIONS

DRAFT

This page intentionally left blank.

DRAFT

PART III, OPERATING UNIT GROUP 4, UNIT-SPECIFIC PERMIT CONDITIONS
242-A EVAPORATOR

UNIT DESCRIPTION

The 242-A Evaporator is a mixed waste treatment and storage unit consisting of a conventional forced-circulation, vacuum evaporation system to concentrate mixed-waste solutions located in the 200 East Area.

This document sets forth the operating conditions for the 242-A Evaporator.

III.4.A COMPLIANCE WITH UNIT SPECIFIC PERMIT CONDITIONS

The Permittees shall comply with all requirements set forth in the Hanford Facility Resource Conservation and Recovery Act (RCRA) Permit (Permit) as specified in Permit Attachment 9, *Permit Applicability Matrix*, including all approved modifications. All chapters, subsections, figures, tables, and appendices included in the following Unit-Specific Permit Conditions are enforceable in their entirety.

In the event that the Part III Unit-Specific Conditions for Operating Unit 4, 242-A Evaporator conflict with the Part I Standard Conditions and/or Part II General Facility Conditions of the Permit, the unit-specific conditions for Operating Unit 4, 242-A Evaporator prevail.

CHAPTERS SPECIFIC TO OPERATING UNIT GROUP 4:

Chapter 1.0	Part A Form, dated November 12, 2019
Chapter 3.0	Waste Analysis Plan, dated November 12, 2019
Chapter 4.0	Process Information, dated TBD~~November 12, 2019~~
Chapter 5.0	Groundwater Monitoring, (not applicable)
Chapter 6.0	Procedures to Prevent Hazards, dated November 12, 2019
Chapter 7.0	Contingency Plan, dated June 24, 2020
Chapter 8.0	Personnel Training, dated September 30, 2013
Chapter 11.0	Closure, dated September 30, 2013

III.4.B COMPLIANCE WITH UNIT-SPECIFIC PERMIT CONDITIONS

III.4.B.1 Portions of Permit Attachment 4 (DOE/RL-94-02) that are not made enforceable by inclusion in the applicability matrix for that document are not made enforceable by reference in this document.

III.4.C TANK SYSTEMS

III.4.C.1 Within 90 days of the effective date of the permit modification, the Permittee shall demonstrate to the department that the leak detection system for the combined PC-5000/3”-WTP-002-M17 transfer lines is designed and operated to detect the presence of liquid in the secondary containment system at the earliest practicable time if the existing detection technologies or site conditions will not allow detection of a release within 24-hours. The Permittees must consider alternative configurations for leak detection and this information will be provided to the department for concurrence. The department will provide a response within 30 days. [Washington Administrative Code (WAC) 173-303-640(4)(c)(iii)]

DRAFT

III.4.C.2 Prior to receipt of any dangerous waste in the combined PC-5000/3”-WTP-002-M17 waste transfer system, the Permittees will submit the tightness test for the combined PC-5000/3”-WTP-002-M17 waste transfer system. [WAC 173-303-640(3)(e)]

III.4.C.2.a Tightness test for the combined waste transfer system piping (PC-5000/3”-WTP-002-M17) will be performed at a frequency of every 10 years upon completion of Permit Condition III.4.C.2.

III.4.C.3 Modifications to the leak detection system will be made in accordance with Permit Condition I.C.3.

III.4.C.4 The electronic leak detection system for the combined PC-5000 and 3”-WTP-002-M17 transfer lines shall be maintained and operated continuously when in use with the following exceptions:

III.4.C.4.a If the electronic leak detection system is not available, visual inspection shall be employed at the PC-5000 catch tank 60M-TK-1 (sight glass FG-60M-001) once per shift, during transfers.

III.4.C.4.b The Department of Ecology (Ecology) must be notified if the electronic leak detection system is out of service for more than 90 days. This notification must include a schedule for repairing and returning the system to service within 90 days from notification, or longer if approved by the department.

III.4.C.5 Prior to receipt of Double-Shell Tank (DST) System dangerous waste through transfer lines SN-275, SL-170, and SL-171, the Permittees will submit to the Department the following:

III.4.C.5.a Tightness test for the waste lines SN-275, SL-170, and SL-171 that pass through the 242-A Evaporator wall to include the three welds connected to these transfer lines immediately outside the 242-A Evaporator building wall, and the three associated wall nozzles inside the 242-A Evaporator.

III.4.C.5.b Installation assessment certified by an independent, qualified installation inspector, or Independent Qualified Registered Professional Engineer (IQRPE) for SN-275, SL-170, and SL-171 wall penetrations.

III.4.C.5.c Installation assessment certified by an independent, qualified installation inspector, or IQRPE for the wall nozzles and jumpers.

III.4.C.6 The Permittees will perform a pneumatic pressure test on the encasements for the wall penetrations for waste lines SN-275, SL-170, and SL-171 that pass through the 242-A Evaporator wall, at a frequency of every 10 years upon completion of Permit Condition III.4.C.5.a.

DRAFT

242-A EVAPORATOR
CHAPTER 4.0
PROCESS INFORMATION

CHANGE CONTROL LOG

Change Control Logs ensure that changes to this unit are performed in a methodical, controlled, coordinated, and transparent manner. Each unit addendum will have its own change control log with a modification history table. The "**Modification Number**" represents Ecology's method for tracking the different versions of the permit. This log will serve as an up to date record of modifications and version history of the unit.

Modification History Table

Modification Date	Modification Number
11/12/2019	8C.2019.4F
04/09/2018	PCN-242-A-2017-02
07/19/2017	8C.2017.Q2
04/26/2017	8C.2017.Q1
02/18/2016	8C.2015.Q4

DRAFT

This page intentionally left blank.

DRAFT

CHAPTER 4.0
PROCESS INFORMATION

DRAFT

This page intentionally left blank.

DRAFT

CHAPTER 4.0
PROCESS INFORMATION

TABLE OF CONTENTS

4.0 PROCESS INFORMATION 5
4.1 Tank Systems 7
4.1.1 Design Requirements 7
4.1.2 Transfer Lines 7
4.1.3 Vapor-Liquid Separator (C-A-1) and Ancillary Equipment 8
4.1.4 Condensate Collection Tank (TK-C-100) and Ancillary Equipment 11
4.1.5 Integrity Assessments 13
4.1.6 Additional Requirements for Existing Tanks 14
4.1.7 Secondary Containment and Release Detection for Tank Systems 14
4.1.8 Variances from Secondary Containment Requirements 22
4.1.9 Tank Management Practices 22
4.1.10 Labels or Signs 23
4.1.11 Air Emissions 23
4.1.12 Management of Ignitable or Reactive Wastes in Tank Systems 24
4.1.13 Management of Incompatible Wastes in Tank Systems 24
4.2 Air Emissions Control 24
4.2.1 Applicability of Subpart AA Standards 24
4.2.2 Process Vents - Demonstrating Compliance 24
4.3 Engineering Drawings 25

FIGURES

Figure 4-1 242-A Evaporator Simplified Process Flow Diagram 27
Figure 4-2 242-A Evaporator Process Loop 28
Figure 4-3 242-A Evaporator Slurry System 29
Figure 4-4 242-A Evaporator Process Condensate System 30
Figure 4-5 242-A Evaporator Vacuum Condenser System 31
Figure 4-6 242-A Evaporator Drain System 32

TABLES

Table 4-1 Process and Instrumentation Diagrams 26
Table 4-2 242-A Evaporator Secondary Containment Systems Drawings 26

DRAFT

This page intentionally left blank.

DRAFT

4.0 PROCESS INFORMATION

The 242-A Evaporator receives mixed waste from the Double-Shell Tank (DST) System that contains inorganic and organic constituents and radionuclides. The 242-A Evaporator Treatment, Storage, and Disposal (TSD) unit group boundary for lines running between the 242-A Evaporator and the DST System end at the exterior wall of 242-A Building. At this point, these lines (e.g., feed and slurry line piping [SN-275, SL-170, and SL-171~~SN-269, SN-270, SL-167, and SL-168~~]) are DST System components. Additional requirements for secondary containment and 242-A Evaporator simplified process flow diagram is given in Figure 4-1. The 242-A Evaporator separates the mixed waste received from the DST System, generating the following waste streams:

- A concentrated aqueous waste stream (slurry) containing the nonvolatile components, including most of the radionuclides, inorganic constituents, and nonvolatile organics such as tri-butyl phosphate.
- A dilute aqueous waste stream (process condensate) containing the volatile components, primarily water with low concentrations of radionuclides, inorganic constituents, and volatile constituents such as ammonia and acetone.

The slurry is routed back to the DST System pending further treatment. The process condensate is transferred to Liquid Effluent Retention Facility (LERF) through the PC-5000 transfer line for storage until processed through the 200 Area Effluent Treatment Facility (ETF). The 242-A Evaporator TSD unit group boundary for the PC-5000 transfer line running between the 242-A Evaporator and LERF end at the LERF TSD unit group boundary.

The 242-A Evaporator process employs a conventional forced circulation, vacuum evaporation system to concentrate the DST System waste solution. The major components of this system include the reboiler (E-A-1), vapor-liquid separator (C-A-1), recirculation pump (P-B-1) and pipe loop, slurry product pump, condenser, jet vacuum system, and condensate collection tank (TK-C-100).

The vapor-liquid separator (C-A-1) also called the evaporator vessel, and the condensate collection tank (TK-C-100), meet the definition of a tank in Washington Administrative Code (WAC) 173-303-040. Other process equipment associated with these tank systems is considered ancillary equipment. Drawings that aid in understanding the systems are provided in Section 4.3.

The 242-A Evaporator receives waste from DST System tank 241-AW-102 that serves as the 242-A Evaporator feed tank. The feed enters the recirculation line and blends with the main process slurry stream, which is pumped to the reboiler.

In the reboiler, the mixture is heated to the specified operating temperature, normally 100 to 155°F, using 3 to 10 pounds per square inch gauge (psig) pressure steam. The low-pressure steam provides adequate heat input, and the resulting low-temperature differential across the reboiler minimizes scale formation on the heat transfer surfaces. The static liquid head of the waste in the reboiler is sufficient to suppress the boiling point so the waste does not boil in the reboiler tubes. Boiling occurs only near or at the liquid surface in the vapor liquid separator (C-A-1), where the static liquid head is zero and the heated waste is at the reduced pressure of the vapor-liquid separator (C-A-1). Slurry may be transferred back to the 242-A Evaporator feed tank through the DST System for one or more passes through the 242-A Evaporator to achieve desired waste volume reduction.

The heated slurry stream is discharged from the reboiler (E-A-1) to the vapor-liquid separator (C-A-1). The vapor-liquid separator (C-A-1) is typically maintained at an absolute pressure of 0.77 to 1.55 psig absolute. Under this reduced pressure, a fraction of the water in the heated slurry flashes to steam and the steam is drawn through two, wire mesh deentrainer pads into a 42-inch diameter vapor line that leads to the primary condenser, leaving behind a more concentrated slurry solution in the vapor-liquid separator (C-A-1).

DRAFT

After a brief residence time in the vapor-liquid separator (C-A-1), the slurry exits from the bottom through the lower portion of the recirculation line and is recirculated by the recirculation pump (P-B-1). The pump discharges the slurry back to the reboiler via the upper portion of the recirculation line, thus completing the recirculation loop.

Operations monitors the specific gravity of the waste liquid, and adjusts process variables to stay within an acceptable range of the target specific gravity. As part of the campaign planning process, a process control plan is developed to identify the campaign objectives and process controls, including the target specific gravity that is determined before the campaign begins. Slurry is removed from the upper portion of the recirculation line and transferred using slurry pump (P-B-2) or gravity drained through an encased underground pipeline (pipe-within-a-pipe) to a designated slurry receiver tank in the DST System.

The vapors are drawn from the vapor-liquid separator (C-A-1), through a 42-inch diameter vapor line and enter a series of three condensers, where the vapors are condensed using raw water. The condensed vapors, called process condensate, are collected in the condensate collection tank (TK-C-100). Steam jets are used to create a vacuum on the vapor liquid separator drawing the process vapors into and through the condensers. Noncondensable vapors are drawn from the condensers, then through a series of particulate filters and vented to the atmosphere. The air discharges are monitored when the 242-A Evaporator is operating to verify that radionuclide and ammonia emissions standards are met.

The process condensate, a mixed waste, is a dilute aqueous solution with ammonia, volatile organics, and trace quantities of non-volatile constituents. The process condensate is pumped from the condensate collection tank (TK-C-100) through the PC-5000 encased underground pipeline (pipe-within-a-pipe) to the LERF.

During a campaign, the evaporation process is continuous, except when waste is recirculated when new feed is not being received. Typical feed flow rates of 69 to 119 gallons per minute (gpm), process condensate flow rates of 39 to 61 gpm, and slurry flow rates of 29 to 61 gpm. The evaporator process is shut down when the desired endpoint concentration of the feed is met. Endpoints are established at the beginning of the campaign, based on the target specific gravity of the waste, or allowable waste volume reduction and defined operating limits. If the evaporation rate cannot achieve the desired endpoint, slurry in the DST System serving as the slurry receiver is transferred to the feed tank for one or more passes through the 242-A Evaporator. At the end of processing, the vapor-liquid separator (C-A-1) and recirculation loop are drained, flushed with raw water, and shut down. The majority of maintenance activities are performed during this shutdown period when waste is not present in the processing equipment with the exception of the condensate collection tank (TK-C-100). The condensate collection tank (TK-C-100) continues to store process condensate from the last campaign.

Other discharges during 242-A Evaporator processing include condensate from the steam used to heat the waste and cooling water used to condense the vapors. The 242-A Evaporator is designed to prevent contamination of these streams, as such the cooling water and steam condensate waste streams do not designate as dangerous waste. The fluids on the uncontaminated side of the heat exchangers are maintained at a higher pressure than the waste stream so that uncontaminated fluid migrates toward the contaminated waste if a leak were to occur. The steam condensate and the cooling water are monitored continuously for radiation, pH, conductivity, and discharged to the Treated Effluent Disposal Facility (TEDF) as long as none of the discharge limits are exceeded. The steam condensate and cooling water streams were assessed in the stream specific reports (WHC-EP-0342-21 [1990], *242-A Evaporator Cooling Water Stream Specific Report, Addendum 21*, and WHC-EP-0342-26 [1996], *242-A Evaporator Steam Condensate Stream Specific Report, Addendum 26*), and are not dangerous waste in accordance with WAC 173-303. The steam condensate and the used raw water waste streams are discharged to the TEDF, under the authority of State Waste Discharge Permit ST0004502.

DRAFT

The 242-A Evaporator process is controlled by operators using the Monitoring Control System (MCS). The MCS computer monitors process parameters and controls the parameters where required. The MCS provides the capability to operate some components (e.g., pumps, valves) in a manual mode. Operations personnel monitor the function of the MCS and process equipment, and operate equipment in a manual mode when required to maintain safe facility operations. Once the configuration parameters and other process control inputs are set, the MCS maintains the process parameters within specified ranges by sending output signals that operate specific pieces of equipment (e.g., control valves). There are redundant MCS components in place that are not used to maintain the integrity of the mixed waste handling system and are not addressed in further detail in this permit.

4.1 Tank Systems

This section discusses information associated with design requirements, integrity assessments, and any additional requirements for tanks used to treat and store mixed waste in the 242-A Evaporator.

The 242-A Evaporator is divided into three major systems that manage mixed wastes. The systems are listed below:

- Transfer lines (PC-5000 and Waste Treatment and Immobilization Plant [WTP] backup transfer line [3”-WTP-002-M17]).
- Vapor-liquid separator (C-A-1) and ancillary equipment.
- Condensate collection tank (TK-C-100) and ancillary equipment.

4.1.1 Design Requirements

The following design requirements were addressed in the 242-A Evaporator/Crystallizer Tank System Integrity Assessment Reports (IARs), which are identified in Section 4.1.5:

- Minimum design wall thicknesses and measured wall thicknesses at various points throughout the tank systems.
- Design standards used in construction, including references.
- Waste characteristics.
- Materials of construction and compatibility of materials with the waste being processed.
- Corrosion protection.
- Seismic design basis evaluation.

The conclusion of the latest IARs are that the 242-A Evaporator system and associated PC-5000 transfer line is not leaking and is fit for use. The inspections, tests, and analyses performed provide assurance that the tank system has adequate design, sufficient structural strength, and sufficient compatibility with the waste to not collapse, rupture, or fail during operation. The report also states that a review of construction files indicates that the building structure was designed and constructed to withstand a design-basis earthquake and recommends a frequency of future integrity assessments. The codes and standards applicable to the design, construction, and testing of the 242-A Evaporator tank system are evaluated as part of the fit for use determination [WAC 173-303-640(2)(d)] reached by the latest IARs for the 242-A Evaporator and associated PC-5000 transfer line.

4.1.2 Transfer Lines

This permit includes the PC-5000 transfer line (3”-EVAP_COND-PC5000-M17) leaving the 242-A Evaporator and ending at LERF Catch Basin 242AL-43 (TSD unit group boundary between 242-A Evaporator and LERF and 200 Area ETF); and the WTP backup transfer line (3”-WTP-002-M17) leaving WTP and merging with the PC-5000 transfer line at caisson MH-WTP-01 (TSD unit group boundary between 242-A Evaporator and WTP is the WTP fence line). Addendum A, “Part A Form,” topographic map depicts these TSD unit group boundaries.

DRAFT

Caisson MH-WTP-01, is a flat bottomed fiberglass tank that contains valves for the isolation of either PC-5000 (3”-PC-5000-M17) or WTP backup transfer line (3”-WTP-002-M17) carrier pipes. All containment pipes open into caisson MH-WTP-01 allowing any leaks to transfer through the caisson to LERF Basin 43. The containment pipe lower internal surfaces are flush with the inside bottom surface of the caisson. The caisson has a 48-inch inside diameter, an overall length of 98-inches and a nominal wall thickness of ½-inch. There are four isolation valves inside the caisson that are controlled by 242-A Evaporator for transfer line use. The valves are 3-inch valves fabricated with stainless steel bodies and pipe extensions.

The PC-5000 transfer line has limited capacity, and cannot be used by both the 242-A Evaporator and WTP at the same time due to valve alignment. The use of the PC-5000 transfer line to transfer liquid effluent from WTP to LERF will be controlled by the 242-A Evaporator. The WTP process condensate transfer to LERF will satisfy the waste acceptance criteria identified in the LERF and 200 Area ETF Permit, Addendum B, “Waste Analysis Plan.”

4.1.2.1 PC-5000 Transfer Line (3”-EVAP_COND-PC5000-M17)

The PC-5000 primary pipeline (3”-EVAP_COND-PC5000-M17) leaves the 242-A Evaporator and ends at valve 60M-43-P. The PC-5000 encasement line (6”-ENC-M17) includes a single-point electronic leak detection element, PC-5000 encasement catch tank 60M-TK-1, and sight glass FG-60M-001. Process condensate from the 242-A Evaporator is transferred to the LERF using a pump located in the 242-A Evaporator and approximately 5,000 feet of pipe, consisting of a 3-inch carrier pipe within a 6-inch outer containment pipeline. Flow through the pump is controlled through a valve at approximate flow rates from 40 to 80 gpm.

The encased fiberglass transfer line (PC-5000) exits the 242-A Evaporator below grade and remains below grade at a minimum 4-feet depth for freeze protection, until the pipeline emerges at the LERF Catch Basin 242AL-43. All piping at the catch basin that is above grade is wrapped with electric heat tracing tape and insulated for protection from freezing. Additional detail including information on secondary containment, leak detection and integrity assessment for this line is provided in Sections 4.1.7.3.3 and 4.1.5.1. The PC-5000 transfer line leaving the 242-A Evaporator is considered ancillary equipment to the 242-A Evaporator up to LERF Catch Basin 242AL-43.

4.1.2.2 Waste Treatment Plant Backup Transfer Line (3”-WTP-002-M17)

The process condensate from WTP can be transferred to LERF by using a pump located at WTP, and approximately 2,380 feet of pipe, consisting of a 3-inch carrier pipe within a 6-inch outer containment pipeline that merges with the PC-5000 transfer line at caisson MH-WTP-001. The combined PC-5000 encasement line (6”-ENC-M17) and WTP backup transfer line (3”-WTP-002-M17) includes a single-point electronic leak detection element is installed at the end of the PC-5000 transfer line, PC-5000 encasement catch tank 60M-TK-1, and sight glass FG-60M-001.

The encased fiberglass backup transfer line (3”-WTP-002-M17) exits the WTP and runs below grade, and merges with the PC-5000 transfer line at caisson MH-WTP-01, for transferring process condensate to LERF. The WTP backup transfer line (3”-WTP-002-M17) leaving the WTP is considered ancillary equipment to the 242-A Evaporator from caisson MH-WTP-01 up to the WTP fence line.

4.1.3 Vapor-Liquid Separator (C-A-1) and Ancillary Equipment

The following sections describe the vapor-liquid separator (C-A-1) and ancillary equipment.

DRAFT

Waste Feed System. Feed to the 242-A Evaporator is supplied via a pump located in the DST System 241-AW-102 feed tank. The feed pump transfers the waste to the 242-A Evaporator through a 3-inch diameter ~~carbon steel~~ transfer pipeline encased in a 6-inch diameter ~~carbon steel~~ pipe to provide secondary containment or a 2-inch diameter transfer pipeline encased in a 4-inch diameter pipe to provide secondary containment. The DST~~pump~~ pits are~~is~~ equipped with ~~a~~ leak detectors that are~~is~~ part of the DST System.

Waste feed will be sampled from 241-AW-102 or identified candidate feed tanks as described in the "Waste Analysis Plan" (Chapter 3.0). The feed sampler (SAMP-F-1) located in a sample enclosure located in the hot equipment storage room has been isolated and blanked, and will be closed in accordance with the approved Closure Plan.

Evaporator Process Loop. The 242-A Evaporator process loop equipment components are as follows:

- Reboiler (E-A-1).
- Vapor-liquid separator (C-A-1).
- Recirculation pump (P-B-1).
- Recirculation loop.

Figure 4-2 is a simplified process flow diagram showing the major components of the process loop.

Reboiler (E-A-1). Waste is heated as the waste passes through the reboiler before entering the vapor-liquid separator (C-A-1). The reboiler (E-A-1) is a vertical tube unit with steam on the shell-side and process solution on the tube-side. The 364 tubes in the reboiler (E-A-1) are enclosed in an approximately 40-inch-outside diameter, 15-feet-long stainless steel shell. Both the reboiler shell and tubes are constructed of 304L stainless steel. The shell is 1/4-inch thick and the tubes are 14-gauge steel. The reboiler is designed to distribute steam evenly and to prevent tube damage from water droplets that may be present in the steam.

Vapor-Liquid Separator (C-A-1). Process solution from the reboiler enters the vapor-liquid separator (C-A-1) via the upper recirculation line. Some of the solution flashes into vapor, which exits through a vapor line at the top of the vapor-liquid separator (C-A-1). The remaining solution (slurry) exits through the recirculation line at the bottom.

The vapor-liquid separator (C-A-1) consists of a lower and upper section. The lower (liquid) section is a stainless steel shell 14 feet in diameter having a 22,500 to 26,000 gallon normal operating capacity (including recirculation loop and reboiler). The maximum design capacity is 35,600 gallons. The upper (vapor) section is a stainless steel shell is 11.5 feet in diameter containing two deentrainment pads. These wire mesh pads remove liquids and solids that entrain into the vapor section of the vessel. Spray nozzles, using recycled process condensate or filtered raw water, wash collected solids from the deentrainment pads and vessel walls; or raw water is used to flush the vapor-liquid separator (C-A-1) vessel. Both sections of the vapor-liquid separator (C-A-1) are constructed of 3/8-inch-thick stainless steel.

Operating parameters in the vapor-liquid separator (C-A-1) are monitored to provide an indication of process problems such as slurry foaming, deentrainer flooding, or excessive vapor temperatures. Instrumentation also is available to monitor the liquid levels in the vapor-liquid separator (C-A-1). Interlocks are activated when high pressures or high- or low-liquid levels are detected, shutting down the evaporation process and placing the facility in a safe configuration. Three configurations can be achieved during operation of the 242-A Evaporator:

- Recirculation with vacuum.
- Recirculation without vacuum.
- Waste in vapor-liquid separator (C-A-1) with no recirculation.

DRAFT

The vapor-liquid separator (C-A-1) and recirculation loop can be drained and flushed to remove any residual solids from the system and/or to reduce radiation levels. The most common flush solution is water, but dilute nitric or citric acid solutions could be used. All acidic flush solutions are chemically adjusted to meet DST acceptance criteria before transfer to the DST System. Antifoam solution is added (at very low flow rates - approximately 0.01 to 0.1 gpm) to the vessel to prevent foaming. The antifoam solution is a noncorrosive, nonregulated silicone-based solution that is compatible with the evaporator components.

242-A Evaporator shutdown is accomplished by performing manual, localized actions such as system isolation, equipment shutdown, etc. The system is designed to drain so that normal practices effectively drain the system. After shutdown, a small volume of liquid may be present in the vapor-liquid separator (C-A-1).

Recirculation Pump. The stainless steel recirculation pump (P-B-1), is constructed as part of the recirculation loop to the reboiler. The 28-inch diameter axial flow pump has nominal flow rate of 13,000 to 16,000 gpm output. The recirculation pump is designed to handle slurry up to 30 percent undissolved solids by volume at specific gravities up to 1.8. The recirculation pump moves waste at high velocities through the reboiler to improve heat transfer, keep solids in suspension, and reduce fouling of the heat transfer surfaces.

The recirculation pump is equipped with shaft seals with high-pressure recycled process condensate (or water) introduced between the seals to prevent the waste solution from leaking out of the system. Seal water pressure and flow are monitored and controlled to shut down the recirculation pump if conditions are not adequate to prevent waste liquid from migrating into the seal water. The used seal water is routed to the feed tank.

Recirculation Loop. The recirculation loop consists of a 28-inch diameter stainless steel pipe that connects the vapor-liquid separator (C-A-1) to the recirculation pump and reboiler. The lower loop runs from the bottom of the vapor-liquid separator (C-A-1) to the recirculation pump inlet. The upper loop connects the pump discharge to the reboiler and the reboiler to the vapor-liquid separator (C-A-1). The feed line from the DST System feed tank and the slurry line to underground storage tanks are connected to the upper recirculation line.

Slurry System. The slurry system draws a portion of the concentrated waste from the upper recirculation loop and transfers it to the DST System.

The major components of the slurry system are the slurry pump and the slurry transfer pipelines. Figure 4-3 shows a simplified flow diagram of the slurry system. These components are described in the following paragraphs.

The slurry pump (P-B-2) is used to transfer slurry from the recirculation loop to the designated DST System tank. The pump is driven by a variable speed motor and is constructed of 304L stainless steel. The slurry pump is designed to generate high pressures to alleviate the possibility of a transfer line plugging.

Interlocks control the operation of the slurry pump. The slurry pump (P-B-2) is shut down if any of the following occur:

- Excessive pressure is detected in the slurry lines to 241-AW Tank Farm.
- A leak is detected in the slurry transfer lines secondary containment.
- A leak is detected in the 241-AW Tank Farm valve pits (see Section 4.1.7.3.2).

The slurry pump uses a shaft seal with recycled process condensate (or water) and pressure and flow controls similar to the system described above for the recirculation pump.

DRAFT

Compliant transfer pipelines route slurry to a designated DST System tank within the 200 East Area. The detection of any leak by the DST System automated leak detection system is used to shut off the slurry pump. In lieu of the MCS automated shutdown, the slurry pump (P-B-2) can be manually shut down at the direction of the shift manager or 242-A Evaporator control room operator if a leak occurs.

The flow rate of the slurry transfer to the DST System is monitored and a decrease in flow below a specified value automatically will shut down the slurry pump (P-B-2) and initiate a line flush with water. The objective of flushing the transfer line is to prevent settling of solids, which precludes plugging the slurry transfer lines.

Slurry samples can be taken from the recirculation loop when needed via a sampler (SAMP-F-2) that is located near the feed sampler in the load out and hot equipment storage room.

4.1.4 Condensate Collection Tank (TK-C-100) and Ancillary Equipment

The following section discusses the condensate collection tank (TK-C-100) and ancillary equipment. This equipment collects process condensate via the condensers in the vacuum condenser system, filters the condensate, and pumps the process condensate to LERF. Figure 4-4 provides a simplified process flow diagram showing the major components of the process condensate system. The following major components make up the process condensate system:

- Vacuum condenser system.
- Condensate collection tank (TK-C-100).
- Process condensate pump (P-C-100).
- Condensate filters (F-C-1 and F-C-3).
- Process condensate radiation monitoring, sampling system and diversion system (RC3).
- Seal pot.
- Process condensate recycle system.
- Vessel vent system.

Vacuum Condenser System. Vapors removed from the vapor-liquid separator (C-A-1) flow to a series of three condensers where the vapors are condensed using raw water. Condensate drains to the condensate collection tank (TK-C-100). The vacuum condenser system consists of the following major components:

- Primary condenser (E-C-1).
- Intercondenser (E-C-2).
- Aftercondenser (E-C-3).
- Steam jet ejectors (J-EC1-1 and J-EC2-2).

Figure 4-5 provides a simplified process flow diagram showing the major components of the vacuum condenser system. These system components are discussed in the following sections.

Primary Condenser (E-C-1). Vapors drawn from the vapor-liquid separator flow through the 42-inch vapor line, into the E-C-1 condenser where the majority of the condensation takes place. Noncondensed vapors exit to the intercondenser (E-C-2) while the condensed vapors (process condensate) drain to the condensate collection tank (TK-C-100). Cooling water passes through the cooling tubes and exits to TEDF.

The carbon steel condenser shell measures approximately 17.5 feet long with an 85-inch inside diameter. The condenser consists of 2,950 equally spaced carbon steel tubes that are 11 feet long with a 0.75-inch outside diameter.

DRAFT

Intercondenser (E-C-2). Noncondensed vapors from E-C-1 enter the intercondenser. The vapor stream contacts the cooling tubes in the condenser where cooling water provides additional condensation. The condensate drains to the condensate collection tank (TK-C-100). Noncondensed vapors and cooling water are routed to the after condenser.

The carbon steel intercondenser measures 7.25 feet long with a 15.4-inch inside diameter. This heat exchanger contains 144 tubes that are 66 inches long with a 0.75-inch outside diameter.

After condenser (E-C-3). Vapor discharged from the intercondenser enters the after condenser. Cooling is supplied to the after condenser by the cooling water from the intercondenser. Condensate is routed to the condensate collection tank (TK-C-100), while the noncondensed vapors are filtered, monitored, and discharged to the atmosphere through the vessel ventilation system. The cooling water is discharged to TEDF.

The carbon steel after condenser measures 7.4 feet long and has an 8-inch inside diameter. This heat exchanger contains 45 tubes that are 6 feet long with a 0.75-inch outside diameter.

Steam Jet Ejectors. The vacuum that draws the vapors from vapor-liquid separator (C-A-1) into the condensers is created by a two-stage steam jet ejector system. The first-stage jet ejector (J-EC1-1) maintains a vacuum on the primary condenser, which in turn creates a vacuum on the vapor-liquid separator. The ejector consists of a steam jet, pressure controller, and air bleed-in valve. Steam and noncondensed vapors from the primary condenser are ejected from J-EC1-1 into the intercondenser. The desired vacuum is obtained by controlling steam pressure and bleeding ambient air as necessary into the vapor header through an air intake filter. The second-stage jet ejector (J-EC2-1) creates the vacuum that moves vapors from the intercondenser through the after condenser.

Condensate Collection Tank (TK-C-100). Process condensate from the primary condenser, intercondenser, after condenser, and the vessel ventilation system drain to the condensate collection tank (TK-C-100). The tank is 14 feet in diameter, 19 feet high, and is constructed of 5/16-inch-thick stainless steel. The tank has a maximum design capacity of 17,800 gallons. Normal operating volume is approximately 50 percent of the tank capacity. A carbon steel base supports the tank. An agitator is installed but not used.

In the event of a tank overflow, the solution is routed through an overflow line to the drain system, which returns waste to the feed tank (241-AW-102). Overflow occurs when the volume exceeds about 16,000 gallons. The overflow line is equipped with a liquid filled trap to isolate the drain system from the tank.

Candidate feed tank waste samples are evaluated for the presence of a separate organic layer as described in the “Waste Analysis Plan” (Chapter 3.0) and process controls are used to reduce the risk of the condensate collection tank (TK-C-100) to receive small amounts of immiscible organics with the condensed waste. If detected, the organic layer is removed by overflowing the condensate collection tank (TK-C-100) back to the feed tank 241-AW-102. The liquid level in the tank is controlled well above the discharge pump intake point and a controlled overflow is conducted upon completion of each processing cycle (campaign or campaigns) to ensure that an organic layer does not accumulate and cannot be pumped to LERF.

Process Condensate Pump. A pump (P-C-100) moves the process condensate from the condensate collection tank (TK-C-100) through the condensate filter to LERF. The process condensate pump is a centrifugal pump constructed of 316 stainless steel.

Condensate Filters. After leaving the condensate collection tank (TK-C-100), the process condensate is filtered to remove solids. The primary condensate filter (F-C-1) has a welded steel housing. A second filter system (F-C-3), installed downstream is also used to filter the process condensate.

This system has duplex in-line filters in cast iron housing. Both filters employ a filter material that is compatible with the process condensate.

DRAFT

Process Condensate Radiation Monitoring, Sampling, and Diversion System. The process condensate is monitored for radiation during transfer to LERF. If radiation levels exceed established limits, an alarm is received and interlocks immediately divert the stream back to the condensate collection tank (TK-C-100) (or the feed tank) and shut off the process condensate pump. This ensures process condensate containing excessive radionuclides due to an accidental carryover from the vapor-liquid separator (C-A-1) is not transferred to LERF.

Seal Pot. The condensate collection tank (TK-C-100) receives condensed liquids from the vessel ventilation system. A seal pot collects the drainage before discharge into the condensate collection tank (TK-C-100) and isolates the tank from the vessel ventilation system.

Condensate Recycle System. For waste minimization, a portion of the process condensate from the condensate collection tank (TK-C-100) is recycled for deentrainment pad sprays and seal water for the recirculation pump (P-B-1) and slurry pump (P-B-2). Use of process condensate instead of raw water results in approximately 10 percent reduction in waste volume generated during continuous operation of the 242-A Evaporator. Filtered raw water also is available as a backup for sprays and seal water. A 2-inch diameter carbon steel line, stainless steel centrifugal pump (P-C-106), and filters (F-C-5 and F-C-4) supply process condensate from condensate collection tank (TK-C-100) to the pad sprays and pump seals. The filters are disposable cartridge filters in carbon steel housings arranged in parallel with one filter in service while the other is in standby.

4.1.5 Integrity Assessments

The IARs are maintained in the Hanford Facility Operating Record, 242-A Evaporator unit-specific portion and discuss:

- The standards used during design and construction of the 242-A Evaporator and the adequacy of those standards.
- The characteristics of the DST System waste processed.
- The adequacy of the materials of construction to provide corrosion protection from the waste processed.
- The age of the tanks and the effect of age on tank integrity.
- The results of the leak tests, visual inspections, and tank wall thickness inspections.
- The frequency and scope of future integrity assessments.
- Deficiencies in secondary containment design. These deficiencies are discussed in the IARs.

An Independent, Qualified, Registered Professional Engineer (IQRPE) certified the integrity assessment.

The inspections, tests, and analyses performed provide assurance that the 242-A Evaporator tank system has adequate design, sufficient structural strength, and sufficient compatibility with the waste to not collapse, rupture, or fail during operation. No evidence of degradation was noted during the visual test, ultrasonic test, or leak test. Both the condensate collection tank (TK-C-100) and the vapor-liquid separator (C-A-1)/reboiler loop passed leak tests. The frequency of subsequent integrity assessments has been established at every 10 years. This frequency is based on the results of the 2008 IARs transmitted to Washington State Department of Ecology (Ecology) on May 27, 2008, which include:

- *IQRPE Integrity Assessment Report for the 242-A Evaporator Tank System*, RPP-RPT-33306, Revision 0, 2007.
- *Integrity Assessment Report for the 242-A PC-5000 Transfer Pipeline*, RPP-RPT-33307, Revision 0, 2007.
- *IQRPE Integrity Assessment Report for the 242-A Evaporator Tank System*, RPP-RPT-33306, Revision 0-A, IQRPE, 2008.

DRAFT

4.1.5.1 Transfer Line (PC-5000)

An integrity assessment for the PC-5000 transfer line was performed, including a hydrostatic leak/pressure test at 150 psig. A statement by an IQRPE attesting to the integrity of the piping system is included in the latest IAR, along with the results of the leak/pressure test. The next integrity assessment for the PC-5000 transfer line will be completed on or before May 27, 2018, in accordance with the 2008 IARs. The schedule for conducting integrity assessments will be at a frequency of every 10 years unless otherwise required by an IQRPE or as required for system repairs and upgrades. All integrity assessments will be conducted in accordance with WAC 173-303-640.

4.1.6 Additional Requirements for Existing Tanks

Refer to information in Section 4.1.1 and the IARs, which includes measuring tank wall thicknesses, evaluating corrosion protection, and performing leak tests.

4.1.7 Secondary Containment and Release Detection for Tank Systems

This section describes the design and operation of secondary containment sumps, drain lines, and leak detection systems for the 242-A Evaporator.

4.1.7.1 Requirements for All Tank Systems

The Construction Specification for 242-A Evaporator-Crystallizer Facilities Project B-100 (*Construction Specification for 242-A Evaporator-Crystallizer Facilities Project B-100, B-100-C1, Automated Industries, Vitro Engineering Division, Richland Washington*, Vitro 1974) was used during preparation, design, and construction of the tank and secondary containment systems. The 2008 IARs detail how the construction specification relates to the national codes and standards.

Constructing the building and vessels per this specification ensures that foundations are capable of supporting tank and secondary containment systems and that uneven settling and failures from pressure gradients do not occur. The 2008 IARs state that the "242-A Evaporator has adequate design, sufficient structural strength, and sufficient compatibility with the wastes to not collapse, rupture, or fail during service loads associated with normal operations and that the building structure was designed and constructed to withstand a design basis earthquake."

The 2008 IARs describe the building and secondary containment system. This system is designed to ensure any release is detected within 24 hours.

The secondary containment system also is designed to contain 100 percent of the maximum operating capacity of the vapor-liquid separator (C-A-1)/reboiler loop, and the drain systems are sloped to allow collection of solution and have sufficient capacity to drain this volume in less than the required 24 hours.

The IAR describes the protective coating material and sealant used to protect concrete and joints from attack by leaks to the secondary containment. The materials of construction for the sump and drain lines are also compatible with the waste processed at the 242-A Evaporator.

For new dangerous waste tank systems or components, the Permittee must obtain a written assessment, reviewed and certified by an IQRPE, in accordance with WAC 173-303-810(13)(a), attesting that the tank system has sufficient structural integrity and is acceptable for the storing and treating of dangerous waste. The assessment must show that the foundation, structural support, seams, connections, and pressure controls (if applicable) are adequately designed and that the tank system has sufficient structural strength, compatibility with the wastes(s) to be stored or treated, and corrosion protection to ensure that it will not collapse, rupture, or fail. [WAC 173-303-640(3)(a)]

DRAFT

During installation of a new dangerous waste tank systems or components, the Permittees will ensure that proper handling procedures are adhered to in order to prevent damage to the new tank systems or components. Prior to covering, enclosing, or placing a new tank system or component in use, an independent, qualified installation inspector, or an IQRPE, either of whom is trained and experienced in the proper installation of tank systems or components, must inspect the system for the presence of weld breaks, punctures, scrapes of protective coatings, cracks, corrosion, structural damage, and inadequate construction/installation. [WAC 173-303-640(3)(c)(i-vi)]

The Permittees will test for tightness, all new dangerous waste tanks and ancillary equipment prior to being covered, enclosed, or placed in use. If a tank system is found not to be tight, all repairs necessary to remedy the leak(s) in the system must be performed prior to the tank system being covered, enclosed, or placed into use. [WAC 173-303-640(3)(e)]

For existing tank system integrity, for each existing tank system, the Permittees must determine that the tank system is not leaking or is fit for use. The permittees must obtain and keep on file at the facility a written assessment reviewed and certified by an IQRPE that attest to the tank system's integrity. This assessment must determine that the tank system is adequately designed and has sufficient structural strength and compatibility with the waste(s) to be stored or treated, to ensure that it will not collapse, rupture, or fail. [WAC 173-303-640(2)(a)]

At a minimum, this assessment must consider the following:

- Design standard(s), if available, according to which the tank system was constructed;
- Dangerous characteristics of the waste(s) that have been and will be handled;
- Existing corrosion protection measures;
- Documented age of the tank system, if available (otherwise, an estimate of the age); and
- Results of a leak test, internal inspection, or other tank system integrity examination such that for other than nonenterable underground tanks and for ancillary equipment, this assessment must include either a leak test, as described above, or other integrity examination, that is certified by an IQRPE, in accordance with WAC 173-303-810(13)(a), that addresses cracks, leaks, corrosion, and erosion.

4.1.7.2 242-A Building Secondary Containment

The 242-A Building serves as a secondary containment vault for the vapor-liquid separator (C-A-1), condensate collection tank (TK-C-100), and ancillary equipment used for transferring mixed waste at the 242-A Evaporator. The concrete for the operating area was poured to form a monolithic structure. Where needed, joints in the concrete were fabricated with preformed filler conforming to the standards of the American Society of Testing and Materials. Joint filler is sealed with a polysulfide sealant per the requirements of the construction specifications (*Construction Specification for 242-A Evaporator-Crystallizer Facilities Project B-100, B-100-C1, Automated Industries, Vitro Engineering Division, Richland Washington*, Vitro 1974).

Before restart in 1994, a new acrylic special protective coating was applied to the concrete in the pump, evaporator, and condenser rooms. The coating meets the requirements of the construction specifications (*Construction Specification for 242-A Evaporator-Crystallizer Facilities Project B-100, B-100-C1, Automated Industries, Vitro Engineering Division, Richland Washington*, Vitro 1974), including resistance to very high radiation doses, temperatures of 170°F, and spills of 25 percent caustic solution. The protective coating is maintained.

DRAFT

The following six rooms contain equipment used to process or store* mixed waste:

- Pump room.
- Evaporator room.
- Condenser room.
- Ion exchange room.
- Loading room* (used for temporary storage of mixed waste).
- Loadout and hot equipment storage room.

4.1.7.2.1 Pump Room

The pump room contains the process recirculation loop, recirculation pump (P-B-1), and slurry pump (P-B-2), and jumpers that transfer feed and slurry solutions between the vapor liquid separator (C-A-1) and the DST System.

The pump room secondary containment walls are 12- to 22-inch-thick reinforced concrete. The secondary containment floor is 20-inch-thick reinforced concrete. The pump room floor is lined with 0.25-inch stainless steel and the concrete walls and ceiling cover blocks are painted with a special protective coating. The pump room contains pipe jumpers used to transfer feed and slurry solutions between the vapor-liquid separator and the DST System, and the process recirculation loop, recirculation pump (P-B-1), and slurry pump (P-B-2).

Leaks in the pump room collect in the pump room sump, a 5 x 5 x 6-feet deep sump with a 0.25-inch stainless steel liner. The pump room sump collects spills from various sources for transfer to the feed tank, 241-AW-102. Figure 4-6 provides a simplified process flow schematic of sources, which drain to the pump room sump. Drainage to the sump includes:

- Leaks to the pump room floor from equipment in the pump room.
- Evaporator room floor drain.
- Loadout and hot equipment storage room floor drain.
- Loading room floor drain.
- Raw water backflow preventer drain.

Solution in the pump room sump is transferred to the feed tank (241-AW-102) using a steam jet. A 10-inch secondary containment overflow line is provided for draining large volumes of solution should a catastrophic tank failure occur. Because the overflow line provides a direct path between the air space of feed tank 241-AW-102 and the pump room, a minimum level of water must be maintained in the sump to prevent cross ventilation. A leak into the pump room sump would be detected by a rise in the sump level. Leaks in the pump room are detected by:

- A rise in the sump level resulting in instrumentation alarms on high sump level.
- Inspections of the ancillary equipment and floor in the pump room identified in Chapter 6.0, “Procedures to Prevent Hazards.”
- Unexplained level increases in feed tank 241-AW-102 because of liquid entering the 242-A Evaporator sump overflow drain line.

The recirculation and slurry pumps in the pump room are equipped with mechanical seals having pressurized water introduced between the seals. The seal water is maintained at a pressure that exceeds the process pressure at the seal to ensure water leaks into the process solution, but waste solution does not leak out. Water from seal leakage is collected in funnels in the pump room and routed to feed tank 241-AW-102 via the 10-inch overflow line described previously.

DRAFT

4.1.7.2.2 Evaporator Room

The evaporator room contains the vapor-liquid separator vessel (C-A-1), part of the recirculation loop, the reboiler, the 42-inch vapor line, and line used to empty the vapor-liquid separator to feed tank 241-AW-102.

The evaporator room secondary containment walls are 22-inch-thick reinforced concrete. The secondary containment floor is 20-inch-thick reinforced concrete. Leaks in the evaporator room flow to a floor drain that routes through a 3-inch line to the pump room sump described in Section 4.1.7.2.1. A leak in the evaporator room would be detected by a rise in the pump room sump level. The floor of the evaporator room and a portion of the pump room floor are 10 feet below grade to contain the entire contents of the vapor-liquid separator, reboiler, and recirculation loop in the event of a catastrophic failure. The floor and walls of the evaporator room up to an elevation of 6 feet are painted with a special protective coating.

4.1.7.2.3 Condenser Room

The condenser room contains the components of the process condensate system described in Section 4.1.4 (refer Figure 4-4), including the condensate collection tank TK-C-100.

The condenser room secondary containment walls are 12- to 22-inch-thick reinforced concrete. The secondary containment floor is 20-inch-thick reinforced concrete. Leaks in the condenser room flow to two floor drains that join and route through a 6-inch line to feed tank 241-AW-102. Leaks in the condenser room are detected by the following:

- Unexpected changes in liquid level in the condensate collection tank (TK-C-100). Instrumentation is provided to monitor liquid level in the tank, including high- and low-level alarms.
- Daily visual inspections of process condensate system components and piping.
- Unexplained level increases in feed tank 241-AW-102 because of liquid entering the common drain line from 242-A Evaporator.

The floor and walls of the condenser room up to an elevation of 4 feet are painted with a special protective coating.

4.1.7.2.4 Ion Exchange Room

The ion exchange room is a small room connected to the condenser room. This room previously contained an ion exchange column that has since been removed from the processing unit in 2003. The ion exchange room walls are 12 inches thick reinforced concrete. The floor is 20-inch-thick reinforced concrete. The room contains a single pipeline used to transfer process condensate during a campaign if the process condensate is diverted to feed tank 241-AW-102. The pipeline within the ion exchange room does not contain valves or other components that could release waste into the ion exchange room other than by a rupture of the line.

Surveillance of the ion exchange room is only required if the piping is returned to service and dangerous waste is reintroduced to the piping as would be the case for diverting process condensate to feed tank 241-AW-102.

4.1.7.2.5 Loading Room and Loadout and Hot Equipment Storage Rooms

The loading room and the loadout and hot equipment storage rooms are used to support maintenance of pump room equipment and store contaminated reusable equipment. Movement of equipment, waste, personnel and other items in and out of the unit as necessary to support ongoing operations and maintenance activities in contaminated zones can occur in these rooms. A contamination control curtain may also be closed in support of evolutions conducted in the load-out and hot equipment storage room to

DRAFT

control the spread of contamination. The loadout and hot equipment storage room contains a slurry sampling system.

The loadout and hot equipment storage rooms walls are 12- to 22-inch-thick reinforced concrete. The floors are 6-inch-thick reinforced concrete. The room contains two recirculation lines and samplers used to sample the feed and slurry streams. The feed sampler has been isolated and is no longer capable of sampling feed. The lines and samplers are located in a shielded enclosure adjacent to the pump room wall.

The loadout and hot equipment storage room contains two sumps: the drain sump and decontamination sump. The sumps are approximately 3 feet in diameter, about 4 feet deep, and lined with stainless steel.

Both sumps drain via a 3-inch drain line to the pump room sump described in Section 4.1.7.2.1. The sumps, floor, and walls of the load out and hot equipment storage room up to an elevation of 12 feet are painted with a special protective coating.

Leaks in the sampler piping, flow into two drains in the sample enclosure that drain via a 2-inch line to the decontamination sump, which drains to the pump room sump (described in Section 4.1.7.2.1). Leak detectors in the sampler enclosures or a rise in the pump room sump level detects leaks in the sampler piping.

4.1.7.2.6 242-A Building Drain Lines

Figure 4-6 provides a simplified process flow schematic of sources routed to the 242-A Building drain lines. The 242-A Evaporator TSD unit group boundary includes these lines up until they exit the 242-A Building. At this point, the lines are considered DST System components. Four lines serve to drain the 242-A Building and equipment to feed tank 241-AW-102:

- Pump room sump drain line (DR-334): 10-inch carbon steel line that transfers process condensate overflow/diverted liquids and empty out of the pump room sump to the feed tank.
- Vapor-liquid separator vessel drain line (DR-335): 10-inch carbon steel line that allows gravity drain of the vessel to the DST feed tank 241-AW-102.
- Condenser room drain line (DR-343): 6-inch carbon steel line that drains potential leakage from the condenser room.
- Diverted process condensate drain line (DR-338): Process condensate liquid drains through DR-338 into sump drain line (DR-334) which drains to feed tank 241-AW-102.

The four lines are sloped to drain about 560 feet to feed tank 241-AW-102 via the drain pit (241-AW-02D). Although WAC 173-303-640(1)(c) exempts systems that serve as secondary containment from requiring secondary containment, drain lines DR-334, DR-335, and DR-338 have outer encasement piping and are part of the DST System.

4.1.7.3 Transfer Line Secondary Containment and Leak Detection

This section describes the design and operation of secondary containment and leak detection systems for transfer lines between the DST System and the 242-A Evaporator, from 242-A Evaporator to LERF, and from WTP Backup Transfer Line to PC-5000. The 242-A Evaporator TSD unit group boundary for lines running between the 242-A Evaporator and the DST System ends at the exterior wall of 242-A Building. At this point, these lines (e.g., feed and slurry line piping [SN-275, SL-170, SL-171~~SN-269, SN-270, SL-167, and SL-168~~]) are DST System components.

The PC-5000 transfer line transfers process condensate (Section 4.1.2) from the 242-A Building to LERF. The 242-A Evaporator TSD unit boundary includes the PC-5000 transfer line up to the LERF TSD unit group boundary (“Part A Form,” Chapter 1.0, and Section 4.1.2).

DRAFT

If a leak or spill of dangerous and/or mixed waste is detected in the secondary containment for PC-5000 and WTP backup transfer line (3”-WTP-002-M17), the following actions will be taken:

- Immediately and safely stop the flow of dangerous waste into the tank or secondary containment.
- Determine the source of the dangerous waste.
- Remove the dangerous waste from secondary containment pursuant to WAC 173-303-640(7)(b). The waste removed from secondary containment areas will be managed as dangerous and/or mixed waste.
- If the cause of the release has not damaged the integrity of the tank system, the Permittee may return the tank system to service pursuant to WAC 173-303-640(7)(e)(ii). In such a case, the Permittee will take action to ensure the incident that caused liquid to enter the secondary containment will not reoccur.
- If the source of the dangerous waste and/or mixed waste is determined to be a leak from the primary containment, or the tank system is unfit for use as determined through an integrity assessment or other inspection, the Permittee must comply with the requirements of WAC 173-303-640(7) and take the following actions [WAC 173-303-640(5)(c)]:
  - Close the tank system according to procedures in WAC 173-303-640(7)(e)(i); or
  - Repair and re-certify [in accordance with WAC 173-303-810(13)(a)] the tank system before the tank system is placed back into service [WAC 173-303-640(7)(e) and (f) and WAC 173-303-806(4)(c)(vii)].
- The permittees will notify and report to Ecology any releases to the environment in accordance with WAC 173-303-640(7)(d).
- If liquids (e.g., dangerous and/or mixed waste, leaks and spills, precipitation, fire water, liquids from damaged or broken pipes) cannot be removed from the secondary containment system within 24-hours, Ecology will be verbally notified within 24-hours of determination that the liquid cannot be removed.
- If the liquids cannot be removed with 24-hours, the Permittees will provide Ecology with a written demonstration within seven (7) business days, in accordance with WAC 173-303-640(4)(c)(iv), WAC 173-303-640(7)(b)(ii), and WAC 173-303-806(4)(c)(vii). The written demonstration will identify at a minimum:
  - Reasons for delayed removal.
  - Measures implemented to ensure continued protection of human health and the environment.
  - Current actions being taken to remove liquids from secondary containment.
- The Permittees will document in the operating record the actions/procedures taken to comply with the above conditions in accordance with WAC 173-303-640(6)(d).

4.1.7.3.1 Feed Line Piping

Waste feed is supplied to the 242-A Evaporator by ~~two~~ DST System ~~feed~~ transfer line~~s~~ SN-275, for transfers from DST System valve pit 241-AW-02E. Transfer line ~~(SN-269 and SN-270) (one in service and one spare)~~SN-270, each consists of 3-inch transfer piping within a 6-inch secondary containment encasement piping. In the event transfer line SN-275 is not available, the spare transfer line SL-171 would be used for transfers from DST System valve pit 241-AW-02A. Transfer line SL-171 consists of a 2-inch transfer piping within a 4-inch secondary containment encasement piping. The transfer piping is sloped to gravity drain to the DST System.

DRAFT

Wall nozzles act as a connection point to the DST System transfer piping, which provide secondary containment through the 242-A building wall. If a leak develops in the wall nozzle primary pipe, fluid will travel down the interior of the respective encasement line (SN-275 or SL-171) to the DST System valve pit leak detection system. If the DST System MCS annunciates a leak alarm associated with the DST System transfer, the transfer operator notifies the 242-A Evaporator control room operator of the appropriate action regarding processing operations.

DST System feed lines SN-269 and SN-270, will be physically isolated from potential sources of dangerous waste, by disconnecting jumpers from the wall nozzles and installing process blanks. These transfer lines do not have secondary containment for the sections that pass through 242-A building wall.

4.1.7.3.2 Slurry Line Piping

The slurry pump (P-B-2) transfers mixed waste through ~~one of two~~ DST System transfer line~~s:~~ ~~SL-167, for transfer to valve pit 241-AW-B (standard configuration), or SL-168 for transfer to valve pit 241-AW-A (alternate configuration).~~ SL-170, for transfers to DST System valve pit 241-AW-02A. In the event SL-170 is not available, the spare transfer line SL-171 would be used for transfers to DST System valve pit 241-AW-02A. Transfer lines SL-170 and SL-171, consist of a 2-inch transfer piping within a 4-inch secondary containment encasement piping. The transfer piping is sloped to gravity drain to the DST System.~~Slurry solution can be routed via double-encased piping from these valve pits to any designated DST System slurry receiver tank.~~

Wall nozzles act as a connection point to the DST System transfer piping, which provide secondary containment through the 242-A building wall. If a leak develops in the wall nozzle primary pipe, fluid will travel down the interior of the respective encasement line (SL-170 or SL-171) to the DST System leak detection system. If the DST System MCS annunciates a leak alarm associated with the DST System transfer, the transfer operator notifies the 242-A Evaporator control room operator of the appropriate action regarding processing operations.

DST System slurry lines SL-167 and SL-168, will be physically isolated from potential sources of dangerous waste, by disconnecting jumpers from the wall nozzles and installing process blanks. These transfer lines do not have secondary containment for the sections that pass through the 242-A building wall.

4.1.7.3.3 PC-5000 Transfer Line (3”-EVAP_COND-PC5000-M17)

The process condensate transfer line (PC-5000) from the 242-A Evaporator is centrifugally cast, fiberglass-reinforced epoxy thermoset resin pressure pipe fabricated to meet the requirements of American Society of Mechanical Engineers (ASME) D2997 (ASME 1984). The 3-inch carrier piping is centered and supported within 6-inch containment piping. Pipe supports are fabricated of the same material as the pipe, and meet the strength requirements of American National Standards Institute (ANSI) B31.3 (ANSI 1987) for dead weight, thermal, and seismic loads. PC-5000 transfer line leaves the 242-A Evaporator and merges with the WTP backup transfer line (3”-WTP-002-M17) at caisson WTP-MH-01. At the intersection of the transfer lines (3”-EVAP_COND-PC5000-M17 and 3”-WTP-002-M17), caisson MH-WTP-01 provides secondary containment.

The PC-5000 primary pipe leaves the 242-A Evaporator and ends at valve 60M-43-P. The encasement line (6”-ENC-M17) and caisson MH-WTP-01 provide secondary containment. If a leak develops in the primary pipe, fluid will travel down the interior of the encasement line to a leak detection system that sounds an alarm in the 242-A Evaporator Control Room. If the electronic leak detection system is not available, visual inspection can be employed at the PC-5000 encasement catch tank 60M-TK-1 (sight glass FG-60M-001). Upon verification of a leak, the 242-A Evaporator shift manager will direct the shutdown of the aqueous waste through the transfer line(s) to immediately prevent addition of waste. To stop 242-A Evaporator waste through the PC-5000 transfer line, the condensate pump (P-C-100),

DRAFT

located at the 242-A Evaporator is shut down. Any leaked waste in the encasement line is gravity drained to LERF Basin 43.

Drawing H-2-88766, Sheets 1 and 3, provide details of the piping from the 242-A Evaporator to LERF.

4.1.7.3.4 Waste Treatment Plant Backup Transfer Line (3”-WTP-002-M17)

The process condensate transfer line (3”-WTP-02-M17) from WTP is constructed of fiberglass-reinforced plastic. The piping material specification is American Society for Testing and Materials (ASTM) D2996, “Standard Specification for Filament-Wound ‘Fiberglass’ (Glass-Fiber-Reinforced Thermosetting-Resin) Pipe.” The 3-inch carrier piping is centered and supported within 6-inch containment piping. Pipe supports are fabricated of the same material as the pipe, and meet the strength requirements of ANSI B31.3 (ANSI 1987) for dead weight, thermal, and seismic loads. The backup transfer line leaves WTP and merges with PC-5000 transfer line at caisson WTP-MH-01. At the intersection of the transfer lines, the caisson (WTP-MH-01) provides secondary containment.

If a leak develops in the primary pipe, fluid will travel down the interior of the secondary containment pipe to a leak detection system located at LERF Catch Basin 242AL-43, which sounds an alarm in the 242-A Evaporator control room or 200 Area ETF control room. If the electronic leak detection system is not available, visual inspection can be employed at the PC-5000 encasement catch tank 60M-TK-1 (sight glass FG-60M-001). Upon verification of a leak, the shift manager notifies WTP to shut down the aqueous waste through the backup transfer line from WTP (3”-WTP-002-M17). Any leaked waste in the encasement line is gravity drained to LERF Basin 43.

Drawing H-2-88766, Sheet 5 provides details of the transfer line from WTP to 242-A Evaporator.

4.1.7.4 Additional Requirements for Specific Types of Systems

Addressed in this section are additional requirements in WAC 173-303-640 for vault systems like the 242-A Building to ensure neither buildup of ignitable vapors nor does infiltration of precipitation occur. This section also addresses secondary containment for ancillary equipment and piping associated with the tank systems.

4.1.7.4.1 Vault Systems

The 242-A Building is a vault constructed partially below ground, providing secondary containment for the tank systems. The 242-A Evaporator “Part A Form” (Chapter 1) contains the ignitable waste number because of the presence of nitrite and nitrate salts, which in sufficient concentrations are considered oxidizers per WAC 173-303-090(5)(a)(iv). Because of their low volatility, these compounds are unlikely to be present in the vapor phase of the tank systems at the 242-A Evaporator. However, to prevent the spread of contamination, the vapor-liquid separator (C-A-1) is ventilated and maintained at lower air pressure than the building air space during operation. This ensures air leakage is from uncontaminated building air space into the tank vapor space. Vapors from the vapor-liquid separator (C-A-1) flow to the vacuum condenser system described in Section 4.0.

The condensate collection tank (TK-C-100), collects process condensate that is not designated ignitable or reactive. The tank systems and ancillary equipment are located within the 242-A Building, which is completely enclosed to prevent run-on and infiltration of precipitation into the secondary containment system.

4.1.7.4.2 Ancillary Equipment

The 242-A Building provides secondary containment for ancillary equipment. Double containment is provided for the feed and slurry transfer lines between the 242-A Building and the AW Tank Farm by pipe-in-pipe arrangements. Since the ancillary equipment has compliant secondary containment the daily inspection requirements in WAC 173-303-640(4)(f) are not applicable.

DRAFT

4.1.8 Variances from Secondary Containment Requirements

The IARs identified in Section 4.1.5 discuss the following three deficiencies associated with the secondary containment system:

Pump Room Sump. The pump room sump does not comply with secondary containment requirements because liquid must be kept in the sump to provide a seal to prevent airflow between the pump room and feed tank 241-AW-102. Although the sump has a 0.25-inch-thick stainless steel liner to prevent corrosion of the concrete floor, the sump does not have secondary containment.

Routine Discharges through Secondary Containment. The configuration of the 242-A Evaporator process requires routine, batch discharges of dangerous waste through secondary containment drain lines. These routine discharges include the following.

- Steam condensate, cooling water, ~~and~~ process condensate sample stations, and safety shower testing drain to the DST feed tank, 241-AW-102, through drain line DR-343. Total discharge is about 10 gallons per month during operation.
- Sample bottle water sprays down in the slurry sample station drains to the decontamination sump in the load out and hot equipment storage room. The decontamination sump then drains to the pump room sump. Total discharge is about 20 gallons per month during operation.
- Vapor-liquid separator (C-A-1) and recirculation loop gravity drain to DST feed tank 241-AW-102, through DR-335. During operations (end of campaigns/shutdown), the waste in the vapor-liquid separator (C-A-1) and recirculation loop can be emptied using the slurry or feed lines; however, this does not fully empty the vapor-liquid separator (C-A-1) and recirculation loop. To ensure that waste is not stored when the 242-A Evaporator is in the shutdown mode, dump valves (HV-CA1-7 and HV-CA1-9) are opened to gravity drain the vapor-liquid separator (C-A-1) and recirculation loop to DST feed tank 241-AW-102 via drain line DR-335. The dump valves may also open to drain the system in the event of equipment failure, interlocks, or power outage.

Transfer Piping Wall Penetrations. ~~Three~~ Two dangerous waste transfer line piping sections (DR-335 and DR-338) passing through the 242-A Building wall are single-walled, i.e., no secondary confinement in the wall. ~~(about 22-inch-thick reinforced concrete).~~

The~~se~~ deficiency~~ies~~ ~~were~~ for DR-335 was identified to Ecology, October 28, 1993. Ecology's response stated:

- "No physical revision of the pipe wall penetrations or the floor drains in the evaporator pump room will be required prior to evaporator restart."
- "If at any time leakage is seen or detected from these installations, or if for any reason these installations are repaired or rebuilt, they will be rebuilt or repaired in accordance with regulations."
- "Should a spill occur in the evaporator pump room, the sump and the piping shall be rinsed three times as required in WAC 173-303-160, as appropriate. 'Appropriate' in this case means that the original regulation was written for a free container, not a sump, so that judgment will have to be used in the application of the regulation. The rinsate shall be transferred to the double-shell tanks."

4.1.9 Tank Management Practices

All waste to be processed at the 242-A Evaporator must be sampled to determine if the waste is compatible with the materials of construction at the 242-A Evaporator. Before each campaign, candidate feed tanks are sampled per the requirements of the "Waste Analysis Plan" (Chapter 3.0). Based on the results, three possible options are implemented.

DRAFT

- The waste is acceptable for processing without further actions.
- The waste is unacceptable for processing as a single batch, but is acceptable if blended with other waste that is going to be processed.
- The waste is unacceptable for processing.

The 242-A Evaporator process is controlled by operators using the MCS. The MCS computer monitors liquid levels in the vapor-liquid separator (C-A-1) and condensate collection tank (TK-C-100). The MCS system manages liquid levels in the vapor-liquid separator (C-A-1) using a control function that controls feed delivery to the vapor-liquid separator (C-A-1). The MCS system also manages liquid levels in the condensate collection tank (TK-C-100) using a control function to maintain the tank level at approximately 50 percent under normal conditions. The MCS has alarms that annunciate on high-liquid levels for both the vapor-liquid separator (C-A-1) and condensate collection tank (TK-C-100) to notify operators that actions must be taken to prevent overfilling of these vessels.

An interlock is activated when high-liquid level in the vapor-liquid separator (C-A-1) is detected, automatically shutting down the feed transfer pump at feed tank 241-AW-102, thereby preventing overfilling of the vessel and carryover of slurry into the process condensate system. The condensate collection tank (TK-C-100) has an overflow line that routes solution to feed tank 241-AW-102 in case of overfilling.

Process and instrumentation drawings are listed in Section 4.3.

The process condensate pump (P-C-100), recirculation pump (P-B-1), and slurry pump (P-B-2) can be shut down using the MCS or manually at the direction of the Shift Manager or 242-A Evaporator Control Room Operator if a leak occurs.

4.1.10 Labels or Signs

This section identifies how tank labeling practices will be implemented to meet the requirements of WAC 173-303-640(5)(d). Both the condensate collection tank TK-C-100 and ancillary piping is labeled “Process Condensate” to alert trained personnel which pipes in the condenser room contain dangerous waste.

The vapor-liquid separator (C-A-1) is located in the evaporator room, a normally unoccupied area. This area is posted as a radiological area based on current conditions. Access is controlled using As Low as Reasonably Achievable (ALARA) principles and limited to personnel in accordance with “Personnel Training” (Chapter 8.0). The tank labels are visible from the walls of the tank enclosure rooms, which are less than 50 feet from the tank systems; therefore, label visibility requirements are met.

4.1.11 Air Emissions

Tank systems that contain acutely or chronically toxic waste, by inhalation must be designed to prevent the escape of such vapors as required by WAC 173-303-640(5)(e). For the DST System waste in the vapor-liquid separator (C-A-1), no determination has been performed to determine if the waste is acutely or chronically toxic by inhalation. Most of the toxic compounds in the DST waste are not volatile, but because of the high radioactivity of the waste, controls are included to prevent or mitigate the release of tank vapors. During operation, the vapor-liquid separator (C-A-1) is maintained under vacuum to ensure air leakage is from uncontaminated building air space into the tank vapor space. The vapor in the vapor-liquid separator (C-A-1) then passes through deentrainment pads to prevent liquid and solid carryover into condensers (E-C-1, E-C-2, and E-C-3). The vapor stream passes through the three condensers that remove the condensable components. The noncondensable vapors pass through High Efficiency Particulate Air (HEPA) filters before being discharged to the environment.

DRAFT

4.1.12 Management of Ignitable or Reactive Wastes in Tank Systems

The 242-A Evaporator "Part A Form" (Chapter 1.0) contains the ignitable waste number because of the presence of oxidizers (nitrates and nitrites). Waste accepted at the 242-A Evaporator does not meet the definition of a combustible or flammable liquid given in National Fire Protection Association (NFPA) code number 30 (NFPA 1996). The buffer zone requirements in NFPA-30, which require tanks containing combustible or flammable solutions be a safe distance from each other and from public way, are not applicable.

Testing is performed on the DST System candidate feed tank waste to be processed to verify the waste does not react exothermically at the elevated temperatures at the 242-A Evaporator. The "Waste Analysis Plan" (Chapter 3.0) discusses waste acceptance requirements due to the reactive waste number contained on the 242-A Evaporator "Part A Form" (Chapter 1.0).

4.1.13 Management of Incompatible Wastes in Tank Systems

Waste transferred to the 242-A Evaporator must be compatible before mixing. The "Waste Analysis Plan" (Chapter 3.0) includes waste compatibility requirements; including waste-to-waste compatibility of multiple candidate feed tanks. Waste stored in the condensate collection tank (TK-C-100) contains low quantities of constituents where compatibility from batch to batch is not a concern.

4.2 Air Emissions Control

This section addresses the requirements of Air Emission Standards for Process Vents, under 40 Code of Federal Regulations (CFR) 264 Subpart AA (incorporated by reference in WAC 173-303-690).

4.2.1 Applicability of Subpart AA Standards

The 242-A Evaporator performs distillation that specifically requires evaluation of process vents for the applicability of 40 CFR 264 Subpart AA.

Waste processed at the 242-A Evaporator routinely contains greater than 10 parts per million organic concentrations; therefore, organic air emissions are subject to 40 CFR 264.1032, which requires organic emissions from all affected vents at the Hanford Facility be less than 3 pounds per hour and 3.1 tons per year, or control devices be installed to reduce organic emissions by 95%.

The 242-A Evaporator has one process ventilation system that vents both the vapor-liquid separator (C-A-1) and the condensate collection tank (TK-C-100). The vent lines from both tanks combine before entering an off-gas system consisting of a deentrainer, a prefilter/demister, HEPA filters, and an exhaust fan. The vessel vent off-gas system is located on the third floor of the condenser room, with the exhaust stack extending horizontally through the east wall of the building at an elevation of approximately 48 feet above ground level. The exhaust stack bends to run vertically with the discharge point approximately 111 feet above ground level.

During waste processing, the airflow is about 720 cubic feet per minute, with about 150 cubic feet per minute ventilated from the condensate collection tank (TK-C-100) and the remainder from the vapor-liquid separator (C-A-1) and air in leakage.

Organic emissions occur during waste processing, which is less than 6 months (182 days) each year. This is the maximum annual operating time for the 242-A Evaporator, as shutdowns are required during the year for maintenance outages, candidate feed tank analysis, and establishing transfer routes for staging waste in the DST System.

4.2.2 Process Vents - Demonstrating Compliance

This section outlines how the 242-A Evaporator complies with the requirements of 40 CFR 264, Subpart AA, including a discussion of the basis for meeting the organic emission limits, calculations demonstrating compliance, and conditions for reevaluating compliance.

DRAFT

4.2.2.1 Basis for Meeting Limits/Reductions

The TSD units at the Hanford Facility subject to 40 CFR 264, Subpart AA meet the organic air emission limits of 3 pounds per hour and 3.1 tons per year, established in 40 CFR 264.1032, by the design of the facility. The 242-A Evaporator and the other TSD units collectively can meet these standards without the use of air pollution control devices.

4.2.2.2 Demonstrating Compliance

Process vent organic air emissions are controlled by establishing limits for acceptance of waste at the 242-A Evaporator. Before startup of each campaign, the waste to be processed is sampled in the DST System to determine the organic content. If the concentrations of organic constituents are less than the limits in the "Waste Analysis Plan" (Chapter 3.0), the waste can be processed, provided the Hanford Facility will not exceed 3 pounds per hour and 3.1 tons per year. The waste acceptance limits in the "Waste Analysis Plan" (Chapter 3.0) are based on equilibrium calculations and assumptions given in *Organic Emission Calculations for the 242-A Evaporator Vessel Vent System* (WHC-SD-WM-ES-380, 1996). The calculation to determine organic emissions consists of the following steps:

1. Determine the emission rate of each candidate feed tank organic constituent by multiplying the constituent concentration by the corresponding partition factor in *Organic Emission Calculations for the 242-A Evaporator Vessel Vent System* (WHC-SD-WM-ES-380, 1996).
2. Sum the emission rates of all organic constituents to determine the emission rate for the candidate feed tank. The maximum emission rate for the campaign is the rate from the candidate tank with the greatest emission rate.
3. Determine the total amount of emission during the campaign by using operating time and a weighted average emission rate, based on the volume of each candidate feed tank processed.

The organic emission rates and quantity of organics emitted during the campaign are determined using these calculations and are included in the operating record for each campaign, as required by 40 CFR 264.1035. The Hanford Facility has a system to ensure organic emissions from units subject to 40 CFR 264, Subpart AA are less than the limits of 3 pounds per hour and 3.1 tons per year. Records documenting total organic emissions are available for Ecology review on request.

4.2.2.3 Reevaluating Compliance with Subpart AA Standards

Calculations to determine compliance with Subpart AA will be reviewed when any of the following conditions occur at the 242-A Evaporator:

- Changes in the configuration or operation that affect the assumptions in the Organic Emission Calculations for the 242-A Evaporator Vessel Vent System (WHC-SD-WM-ES-380, 1996).
- Annual operating time exceeds 182 days.

4.3 Engineering Drawings

The drawings in Table 4-1 are Process and Instrumentation Diagrams (P&IDs) for the systems at the 242-A Evaporator that contact mixed waste. These drawings are provided for general information, and demonstrate adequacy of the tank systems design.

DRAFT

Table 4-1 Process and Instrumentation Diagrams

System	Drawing Number	Drawing Title
Vapor-Liquid Separator (C-A-1)	H-2-98988 Sheet 1	P&ID Evaporator Recirc System
Reboiler (E-A-1)/Recirculation Line	H-2-98988 Sheet 2	P&ID Evaporator Recirc System
Slurry System	H-2-98989 Sheet 1	P&ID Slurry System
Condensate Collection Tank (TK-C-100)	H-2-98990 Sheet 1	P&ID Process Condensate System
Secondary Containment Drain System	H-2-98995 Sheet 1	P&ID Drain System
Secondary Containment Drain System	H-2-98995 Sheet 2	P&ID Drain System
Condensers	H-2-98999 Sheet 1	P&ID Vacuum Condenser System
Pump Room Sump	H-2-99002 Sheet 1	P&ID Jet Gang Valve System
Condensate Recycle System	H-2-99003 Sheet 1	P&ID Filtered Raw Water System
PC-5000 Transfer Line (3”-EVAP_COND-PC5000-M17)	H-2-88766, Sheets 1 and 3	P&ID LERF & ETF Influent Evaporator
WTP backup transfer line (3”-WTP-002-M17)	H-2-88766, Sheet 5	P&ID LERF WTP Interface

The drawings in Table 4-2 are for secondary containment systems for the 242-A Evaporator. Because secondary containment systems are the final barrier for preventing the release of dangerous waste into the environment, modifications that affect the secondary containment systems will be submitted to Ecology as a Class 1, 2, or 3 Permit modifications, as required by WAC 173-303-830.

Table 4-2 242-A Evaporator Secondary Containment Systems Drawings

System	Drawing Number	Drawing Title
242-A Building	H-2-69277 Sheet 1	Structural Foundation Plan Sections & General Notes - Areas 1 & 2
	H-2-69278 Sheet 1	Structural Foundation Elevations & Details - Areas 1 & 2
	H-2-69279 Sheet 1	Structural First Floor Plan & AMU - Areas 1 & 2
Pump Room Sump Drainage	H-2-69352 Sheet 1	Sections Process Waste Drainage
242-A Building Drainage	H-2-69354 Sheet 1	Plan Process Waste Drainage
Pump Room Sump	H-2-69369 Sheet 1	Pump Room Sump Assembly & Details

DRAFT

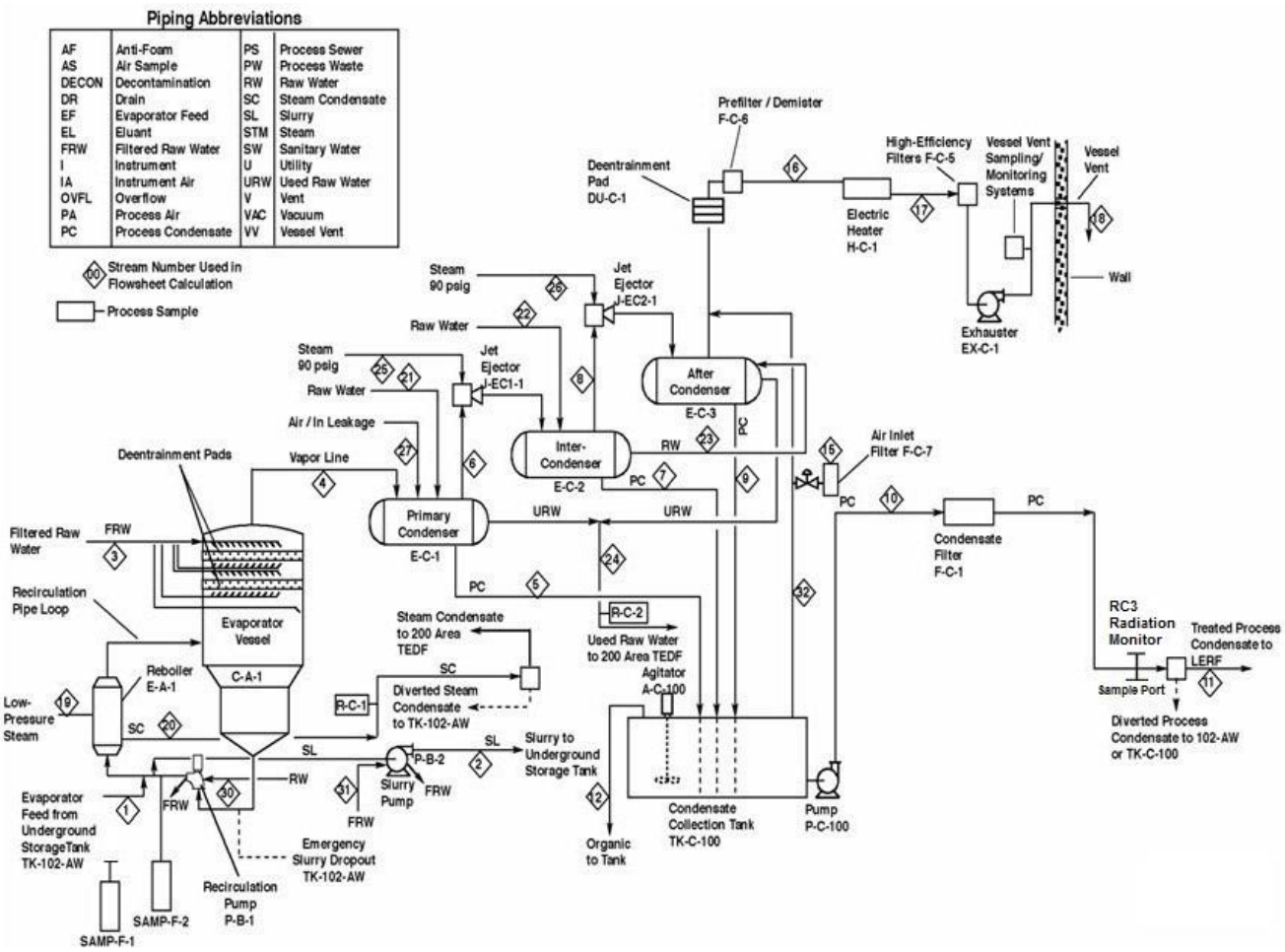

1 **Figure 4-1 242-A Evaporator Simplified Process Flow Diagram**

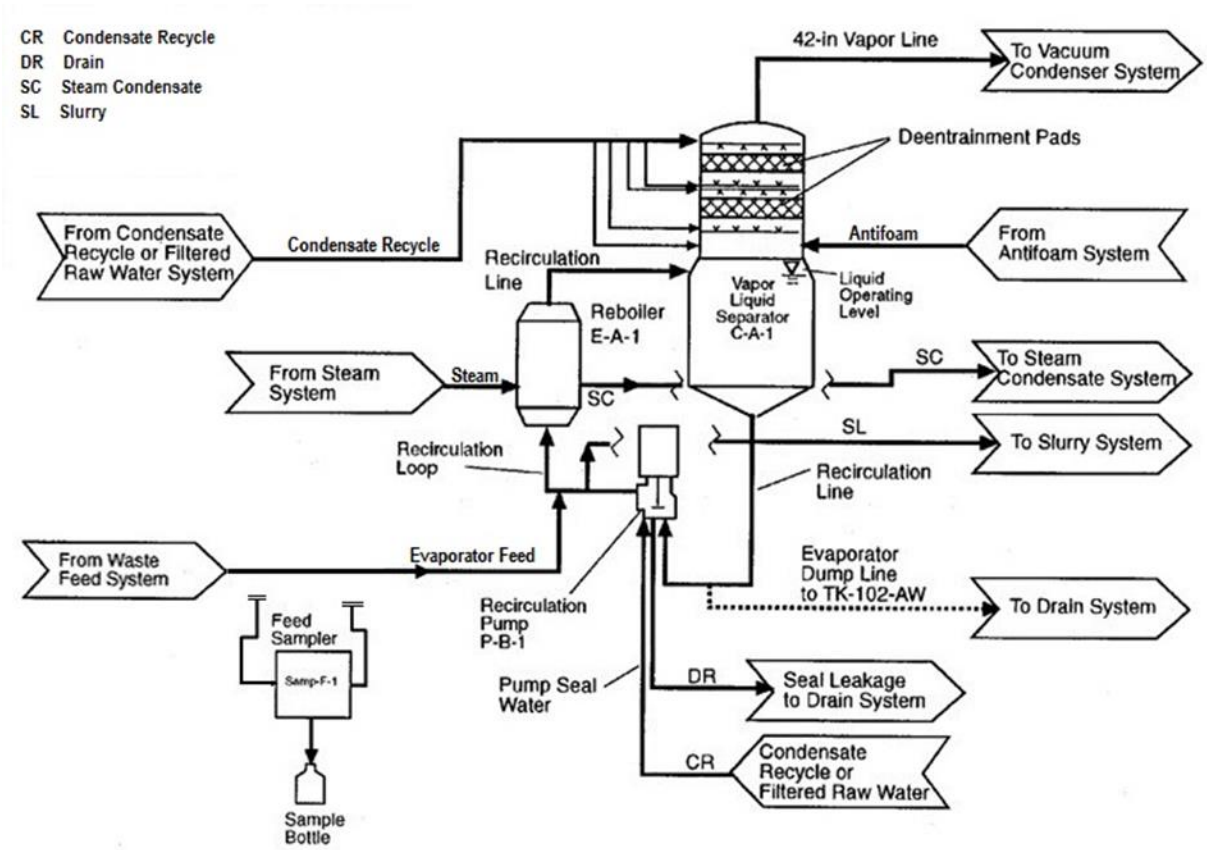

Figure 4-2 242-A Evaporator Process Loop

DRAFT

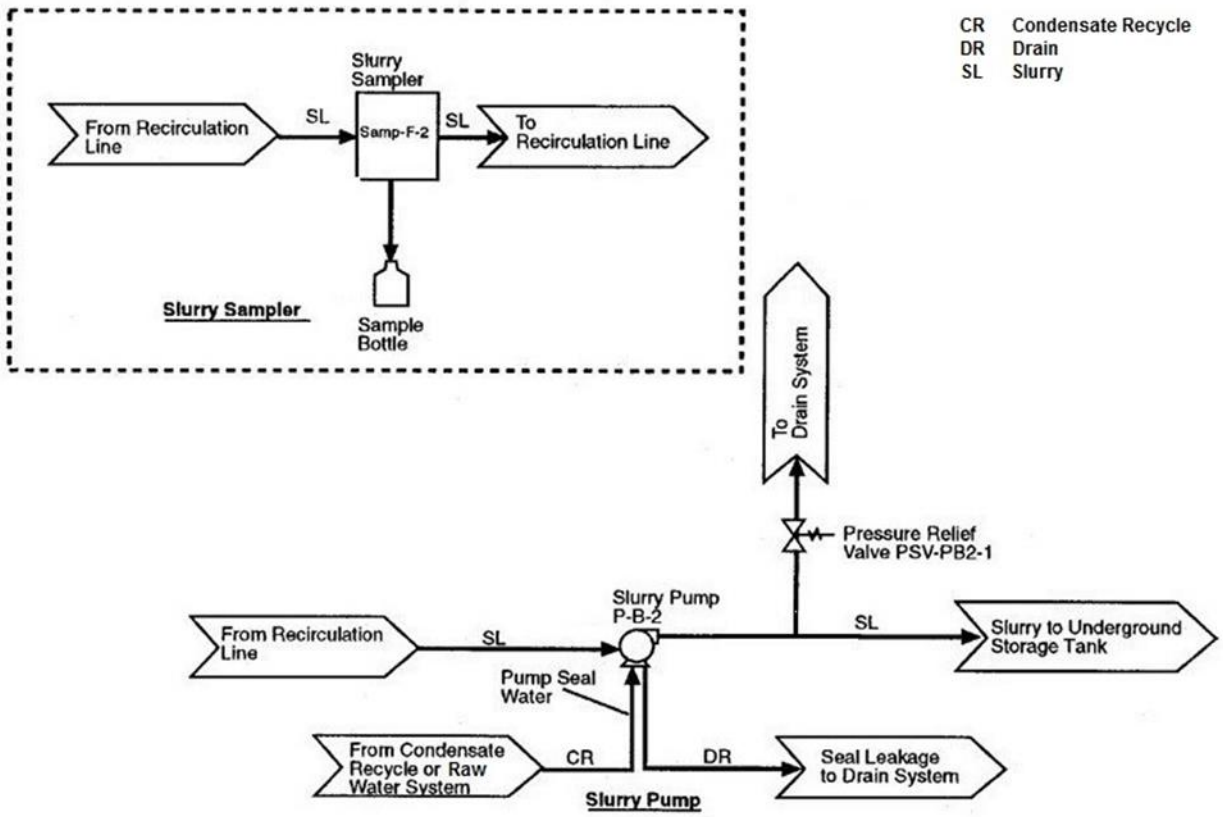

Figure 4-3 242-A Evaporator Slurry System

DRAFT

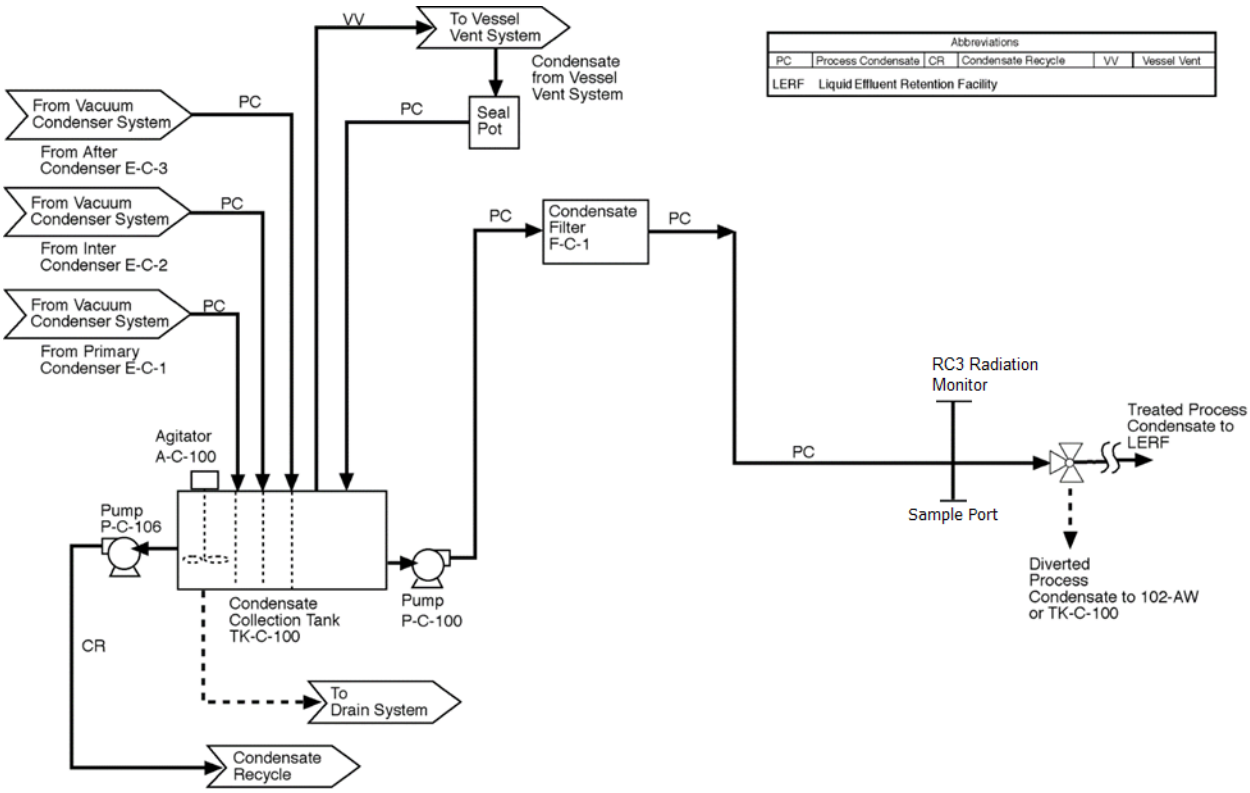

Figure 4-4 242-A Evaporator Process Condensate System

DRAFT

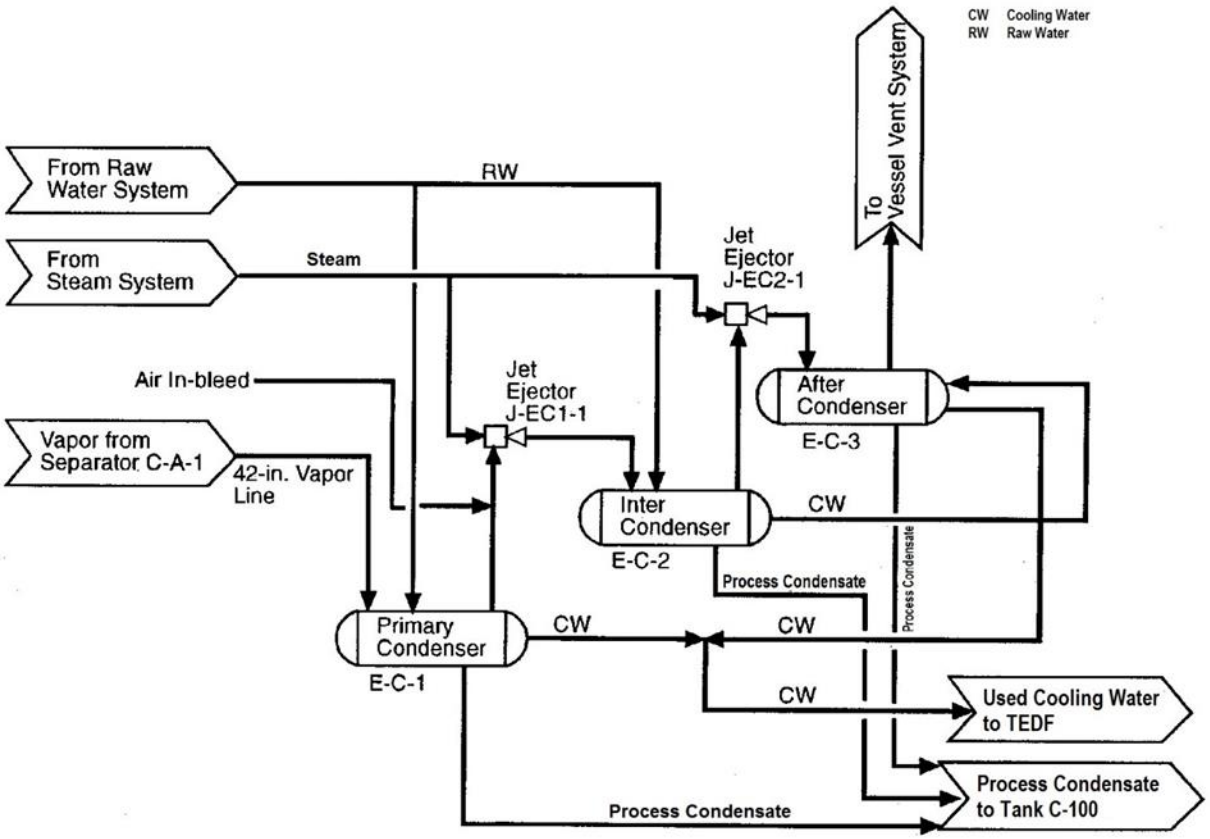

1 **Figure 4-5 242-A Evaporator Vacuum Condenser System**

DRAFT

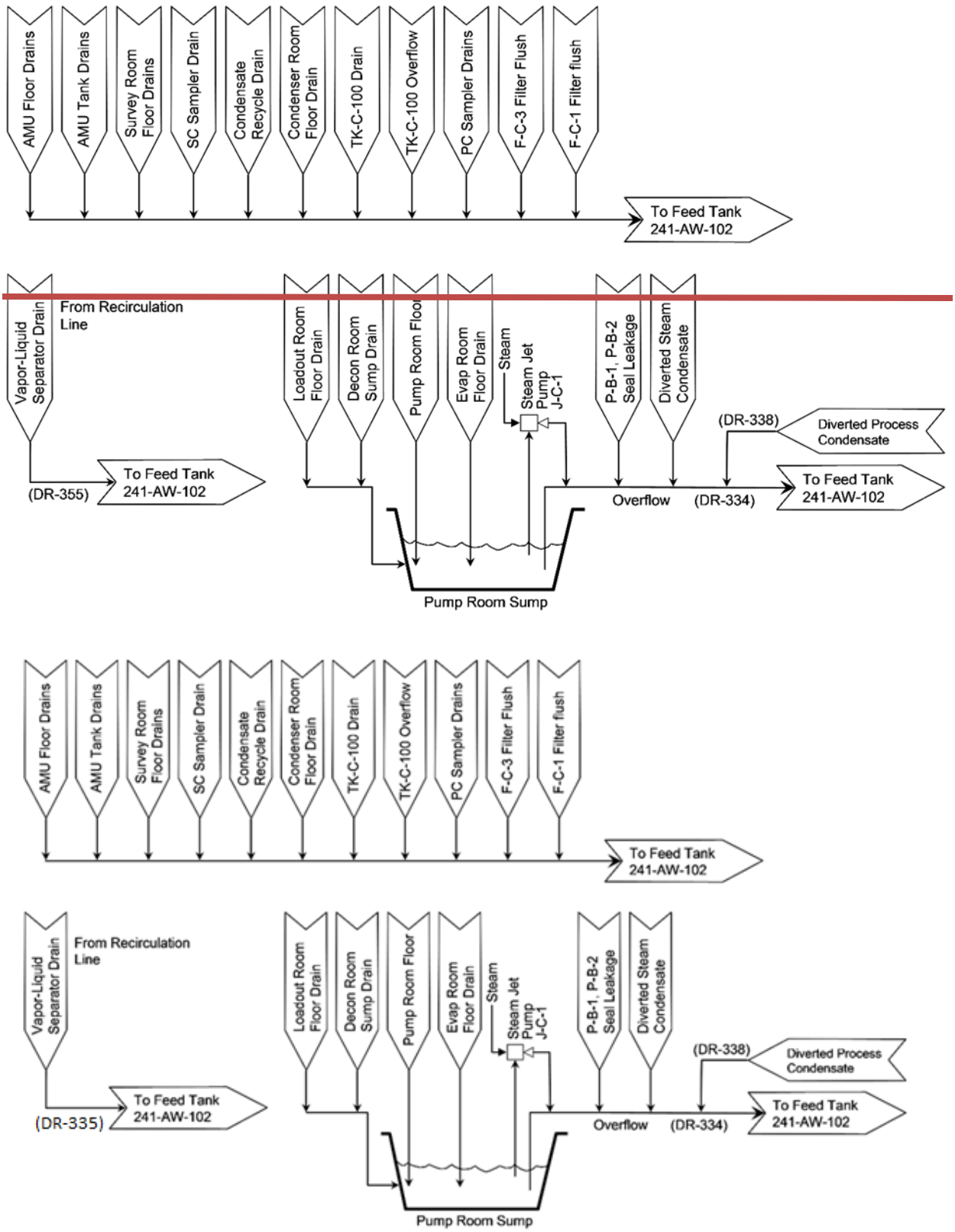

Figure 4-6 242-A Evaporator Drain System

DOCUMENT RELEASE AND CHANGE FORM

Prepared For the U.S. Department of Energy, Assistant Secretary for Environmental Management
By Washington River Protection Solutions, LLC., PO Box 850, Richland, WA 99352
Contractor For U.S. Department of Energy, Office of River Protection, under Contract DE-AC27-08RV14800

TRADEMARK DISCLAIMER: Reference herein to any specific commercial product, process, or service by trade name, trademark, manufacturer, or otherwise, does not necessarily constitute or imply its endorsement, recommendation, or favoring by the United States government or any agency thereof or its contractors or subcontractors. Printed in the United States of America.

Release Stamp

DATE: Dec 09,2020

HANFORD RELEASE

1. **Doc No:** RPP-IQRPE-50066 **Rev.** 01

2. **Title:**
Independent Qualified Registered Professional Engineer Design Assessment for 242-A Evaporator Transfer Line Replacement Project, 242-A Pump Room Structural Modifications (Wall Nozzles)

3. **Project Number:** T1P207 ☐N/A

4. **Design Verification Required:** ☐Yes ☒No

5. **USQ Number:** EV-20-0937-D, Rev. 1 ☐ N/A

6. **PrHA Number** **Rev.** ☒ N/A

Clearance Review Restriction Type: public

7. **Approvals**

Title	Name	Signature	Date
Clearance Review	Raymer, Julia R	*Raymer, Julia R*	12/09/2020
Design Authority	Engeman, Jason K	*Engeman, Jason K*	12/08/2020
Checker	Labelle, Steven A	*Labelle, Steven A*	12/08/2020
Document Control Approval	Meinecke, Kathryn R	*Meinecke, Kathryn R*	12/09/2020
Environmental Protection	Wall, Jeremy M	*Wall, Jeremy M*	12/08/2020
Originator	Barnes, Travis J	*Barnes, Travis J*	12/08/2020
Responsible Manager	Smith, Gregory E	*Smith, Gregory E*	12/09/2020
USQ Evaluator	Wheeler, Ronnie	*Wheeler, Ronnie*	12/08/2020

8. **Description of Change and Justification**

Revised to address comments related to the new environmental permit.

9. **TBDs or Holds** ☒N/A

10. **Related Structures, Systems, and Components**

a. **Related Building/Facilities** ☐N/A	b. **Related Systems** ☐N/A	c. **Related Equipment ID Nos. (EIN)** ☐N/A
242-A EVAPORATOR FACILITIES	241-WT	AW02A-WT-WTL-SL-170 AW02A-WT-WTL-SL-171 AW02E-WT-WTL-SN-275

11. **Impacted Documents – Engineering** ☒N/A

Document Number	Rev.	Title

12. **Impacted Documents (Outside SPF):**

N/A

13. **Related Documents** ☒N/A

Document Number	Rev.	Title

14. **Distribution**

Name	Organization
Engeman, Jason K	TANK FARM PROJECTS ENGINEERING
Huntington, Nikki L	CSE & RELIABILITY ENGINEERING

RECEIVED
Dec 9, 2020
Department of Ecology
NWP - Richland

RPP-IQRPE-50066
Revision 1

INDEPENDENT QUALIFIED REGISTERED PROFESSIONAL ENGINEER DESIGN ASSESSMENT REPORT FOR 242-A EVAPORATOR TRANSFER LINE REPLACEMENT PROJECT, 242-A PUMP ROOM STRUCTURAL MODIFICATIONS (WALL NOZZLES)

Prepared by

Meier Architecture and Engineering for
Washington River Protection Solutions, LLC

Date Published
December 2020

Prepared for the U.S. Department of Energy
Office of River Protection

Contract No. DE-AC27-08RV14800

Approved for Public Release;
Further Dissemination Unlimited

Independent Qualified Registered Professional Engineer
Design Assessment Report
for

242-A Evaporator Transfer Line Replacement Project, 242-A Pump Room Structural Modifications (Wall Nozzles)

IQRPE Design Assessment Report No. DA-327971-01
Rev. 1

Prepared by

Meier Architecture • Engineering
12 W. Kennewick Ave.
Kennewick, WA 99336

At the request of

Washington River Protection Solutions, LLC
Richland, Washington 99352

Meier Project No. 19-8530
WRPS Subcontract No. 64658, Release 026

December 3, 2020

TABLE OF CONTENTS

TABLE OF CONTENTS 2

1.0 INTRODUCTION 5
1.1 PROJECT DESCRIPTION 6
1.1.1 Background 6
1.1.2 IQRPE Scope 6
1.2 DESIGN REVIEW REQUIREMENTS 18
1.3 DESIGN OVERVIEW FOR 242-A EVAPORATOR TRANSFER LINE REPLACEMENT PROJECT, 242-A PUMP ROOM STRUCTURAL MODIFICATIONS (WALL NOZZLES) 18
1.3.1 Facility Structural Modifications 18
1.3.1.1 242-A Evaporator Pump Room Structural Modifications 18
1.4 SCOPE OF IQRPE DESIGN ASSESSMENT 19
1.4.1 Portions of the 242-A Evaporator Transfer Line Replacement Project, 242-A Pump Room Structural Modifications (Wall Nozzles) Included in Scope for IQRPE Certification 19
1.4.2 Portions of the 242-A Evaporator Transfer Line Replacement Project, 242-A Pump Room Structural Modifications (Wall Nozzles) Not Included in Scope for IQRPE Certification 20

2.0 ASSESSMENT SUMMARY 20
2.1 CODES, STANDARDS, AND REGULATIONS 20
2.2 BASIS OF DESIGN 20
2.2.1 Structural Design Standards 21
2.2.2 242-A Evaporator Transfer Line Replacement Project, 242-A Pump Room Structural Modifications (Wall Nozzles) 22
2.2.2.1 Structural Modification (Wall Nozzles) 22
2.2.2.2 242-A Pump Room 2” Wall Nozzles 41 and 42 23
2.2.2.3 242-A Pump Room 3” Wall Nozzle 43 23
2.2.2.4 Structural Design Exceptions 23
2.2.2.5 Structural Design Assessment Conclusion 23
2.2.3 Waste Compatibility 23
2.2.3.1 Anticipated Chemistry and Controls 24
2.2.3.2 Waste Compatibility Exceptions 25
2.2.3.3 Waste Compatibility Assessment Conclusion 25
2.2.4 Pressure Control System 25
2.2.4.1 242-A Pump Room 2” Wall Nozzles 41 and 42 25
2.2.4.2 242-A Pump Room 3” Wall Nozzle 43 26
2.2.4.3 Pressure Control System Exceptions 27
2.2.4.4 Pressure Control System Conclusion 27
2.2.5 Secondary Containment System 27
2.2.5.1 Secondary Containment System Exceptions 28
2.2.5.2 Secondary Containment System Conclusion 28
2.2.6 Ancillary Equipment Design 28
2.2.6.1 Ancillary Equipment Design Exceptions 28

2.2.6.2 Ancillary Equipment Design Conclusion....28
2.2.7 P&ID Review....28
2.2.8 Corrosion Assessment....28
2.2.8.1 Corrosion Assessment Exceptions....29
2.2.8.2 Corrosion Assessment Conclusion....29
2.2.9 Recommended Inspection Schedule for Future Integrity Assessment....29

3.0 DESIGN REVIEW ASSESSMENT CERTIFICATIONS....30

4.0 REFERENCES....32

Tables

Table 1: Transfer Line to Wall Nozzle Connections....6

Table 2: 242-A Evaporator Transfer Line Replacement Project, 242-A Pump Room Structural Modifications (Wall Nozzles) Operating Characteristics....20

Table 3: 242-A Evaporator Transfer Line Replacement Project, 242-A Pump Room Structural Modifications (Wall Nozzles) Materials of Construction....24

Figures

Figure 1: Overall Scope of 242-A Evaporator Transfer Line Replacement Project....8

Figure 2: Overall Plan View of 242-A Evaporator Transfer Line Replacement Project....9

Figure 3: Facilities in the Hanford Site 200 East Area....10

Figure 4: Aerial Photograph Showing an Overview of the 242-A Evaporator Facility in the 200 East Area....11

Figure 5: Photograph of the Outside of the 242-A Evaporator Facility in the 200 East Area....12

Figure 6: Aerial View of the 242-A Evaporator Facility in the 200 East Area....13

Figure 7: Approximate Locations of Wall Nozzle Penetrations through West Wall of 242-A Evaporator Building (RPP-CALC-63208)....14

Figure 8: 242-A Pump Room 2” Wall Nozzle 41/42 Weldment (Drawing: H-14-111832, Sheet 2)....15

Figure 9: 242-A Pump Room 2” Wall Nozzle 41/42 Inner Pipe Weldment Section View (Drawing: H-14-111832, Sheet 3)....15

Figure 10: 242-A Pump Room 3” Wall Nozzle 43 Weldment (Drawing: H-14-111832, Sheet 4)....16

Figure 11: 242-A Pump Room 3” Wall Nozzle 43 Inner Pipe Weldment Section View (Drawing: H-14-111832, Sheet 5) 16

Figure 12: Slurry Pipe to Wall Nozzle Detail A (H-14-111860, Sheet 8) 17

Figure 13: Supernate Pipe to Wall Nozzle Detail B (H-14-111860, Sheet 8) 17

1.0 INTRODUCTION

Code of Federal Regulations (CFR) 40 CFR 265.192, *Design and Installation of New Tank Systems or Components,* and Washington Administrative Code (WAC) 173-303-640(3), *Design and Installation of New Tank Systems or Components,* provide a set of requirements for Owner/Operators of dangerous waste tank systems. This Design Assessment Report is prepared for Washington River Protection Solutions, LLC (WRPS), to meet the Washington Department of Ecology (Ecology) review, by an Independent Qualified Registered Professional Engineer (IQRPE) to certify that the proposed tank system will have sufficient structural integrity and is acceptable for storing and treating dangerous waste per 40 CFR 265.192(a) and WAC 173-303-640(3)(a).

WRPS Statement of Work (SOW) No. 327971, *242-A Evaporator Transfer Line Replacement IQRPE (BMA# 64658),* was issued to cover the overall work scope associated with the 242-A Evaporator Transfer Line Replacement Project. Due to both the nature and schedule of the work scope, the IQRPE design assessment process will be covered under three (3) different documents.

- DA-327971-01, *Design Assessment Report for 242-A Evaporator Transfer Line Replacement Project, 242-A Pump Room Structural Modifications (Wall Nozzles),* covers the three (3) nozzles installed in the west wall of the 242-A Evaporator Building.
- DA-327971-02, *Design Assessment Report for 242-A Evaporator Transfer Line Replacement Project, 242-A Pump Room Jumpers,* will cover the jumpers installed inside the 242-A Pump Room that are connected to the wall nozzles.
- DA-327971-03, *Design Assessment Report for 242-A Evaporator Transfer Line Replacement Project, Transfer Lines/AW Farm Jumpers/Structural Modifications (AW Farm Wall Nozzles),* will cover the transfer lines, jumpers installed, and wall nozzles in three (3) different pits of the 241-AW Tank Farm. These pits include 241-AW-02A, AW-B, and AW-02E.

The design assessment scope covered under this document includes only DA-327971-01. The corresponding Inspection Plan for this scope is detailed in IP-327971-01, *IQRPE Inspection Plan for 242-A Evaporator Transfer Line Replacement Project, 242-A Pump Room Structural Modifications (Wall Nozzles)*. This Inspection Plan identifies the IQRPE inspections required for the procurement, fabrication, testing, and installation for the 242-A Evaporator Transfer Line Replacement Project, 242-A Pump Room Structural Modifications (Wall Nozzles).

IA-327971-01, *IQRPE Installation Assessment Report For 242-A Evaporator Transfer Line Replacement Project, 242-A Pump Room Structural Modifications (Wall Nozzles)* will also be prepared for WRPS, to meet Ecology review by an IQRPE to certify that the tank system installations are in accordance with 40 CFR 265.192(b)-(f) and WAC 173-303-640(3) (c)-(g).

The IQRPE maintains “independence” at all times. However, comments by others are considered by the IQRPE during the preparation of reports and plans. Only the IQRPE can implement changes to the master IQRPE documents.

1.1 PROJECT DESCRIPTION

1.1.1 Background

The overall scope of the 242-A Evaporator Transfer Line Replacement Project will execute the design, construction, and installation of the replacement feed/slurry transfer lines, intra-farm transfer line, 242-A structural interface modifications, DST structural pit modifications, and waste transfer jumpers in support of the 242-A Evaporator mission. Recent pneumatic testing on the encasement of transfer line SL-167 determined that it could not maintain pressure. Therefore, the transfer line cannot meet Resource Conservation and Recovery Act (RCRA) compliance and requires replacement.

The SL-167 transfer line originates at a wall nozzle within the 242-A Evaporator Pump Room and allows slurry transfer to tank farms via the P-B-2 waste transfer pump in the 242-A Evaporator. The primary purpose of SL-167 is to support 242-A Evaporator campaigns by creating double-shell tank (DST) space through waste reduction. This directly supports the River Protection Project mission to retrieve and treat highly radioactive waste stored in Hanford Site tanks in an environmentally safe, sound, and cost-effective manner.

Existing feed lines SN-269 and SN-270 connect AW-02E to their respective wall nozzles within the 242-A Evaporator Pump Room. SN-269 is the current in-service feed line.

Three (3) new wall nozzles will be installed in the west wall of the 242-A Evaporator Building to provide the connection points to the three (3) new transfer lines: SL-170, SL-171, and SN-275. The wall nozzle associated with its respective transfer line is listed in Table 1.

Table 1: Transfer Line to Wall Nozzle Connections

Transfer Line Equipment Identification Number	242-A Wall Nozzle
AW02A-WT-WTL-SL-170	242-A, Nozzle 41
AW02A-WT-WTL-SL-171	242-A, Nozzle 42
AW02E-WT-WTL-SN-275	242-A, Nozzle 43

1.1.2 IQRPE Scope

Meier Architecture • Engineering (Meier) provided an IQRPE to perform the design assessment per WRPS SOW No. 327971. The scope includes review of the design, procurement, fabrication, testing, and installation activities for the IQRPE Support to the 242-A Evaporator Transfer Line Replacement Project, 242-A Pump Room Structural Modifications (Wall Nozzles).

A review of design documents (drawings, calculations, material specifications, etc.) was completed by the IQRPE. Fabrication and installation inspections will be completed by the

IQRPE. Included within the scope of the IQRPE review are various technical evaluations covering areas dealing with potential waste leak paths, thermal expansion, water hammer, and freeze protection issues associated with the components of the IQRPE Support to 242-A Evaporator Transfer Line Replacement Project, 242-A Pump Room Structural Modifications (Wall Nozzles).

The IQRPE performed the design assessment to the requirements of 40 CFR 265.192 and WAC 173-303-640(3) for each of the new wall nozzles listed above.

This IQRPE design assessment takes credit for the following previously issued IQRPE Design Assessment and Installation Assessment Reports that cover the previously installed components of the 242-A Evaporator System and Waste Transfer System (WTS).

- RPP-RPT-60098, *242-A Evaporator System Integrity Assessment Report*. This IQRPE report was the independent assessment of the waste-handling system integrity of the 242-A Evaporator facility in accordance with WAC 173-303-640.
- RPP-25153, *Volume 3: IQRPE DST System Integrity Assessment - Waste Compatibility*. This report reviews the past, current, and projected future contents of the Hanford DSTs, materials of construction of the DSTs and ancillary equipment, and possible mechanisms of corrosion to reach conclusions and recommendations about waste compatibility with the existing equipment.
- RPP-27591, *Volume 2: IQRPE DST System Integrity Assessment - Pipeline Integrity*. This report assesses design standards, hazardous waste compatibility, existing corrosion protection measures, past pipeline integrity assessments, and results of leak test, internal inspection and examinations necessary to support the overall DST System Integrity Assessment.
- RPP-RPT-58441, *Double-Shell Tank System Integrity Assessment Report (DSTAR)*. This report assesses the overall integrity for the waste storage tanks, pits, vaults, and buried piping using the DST system configuration as of 2016.

The following figures show the general layout of the project location, infrastructure, equipment layout, and other pertinent details:

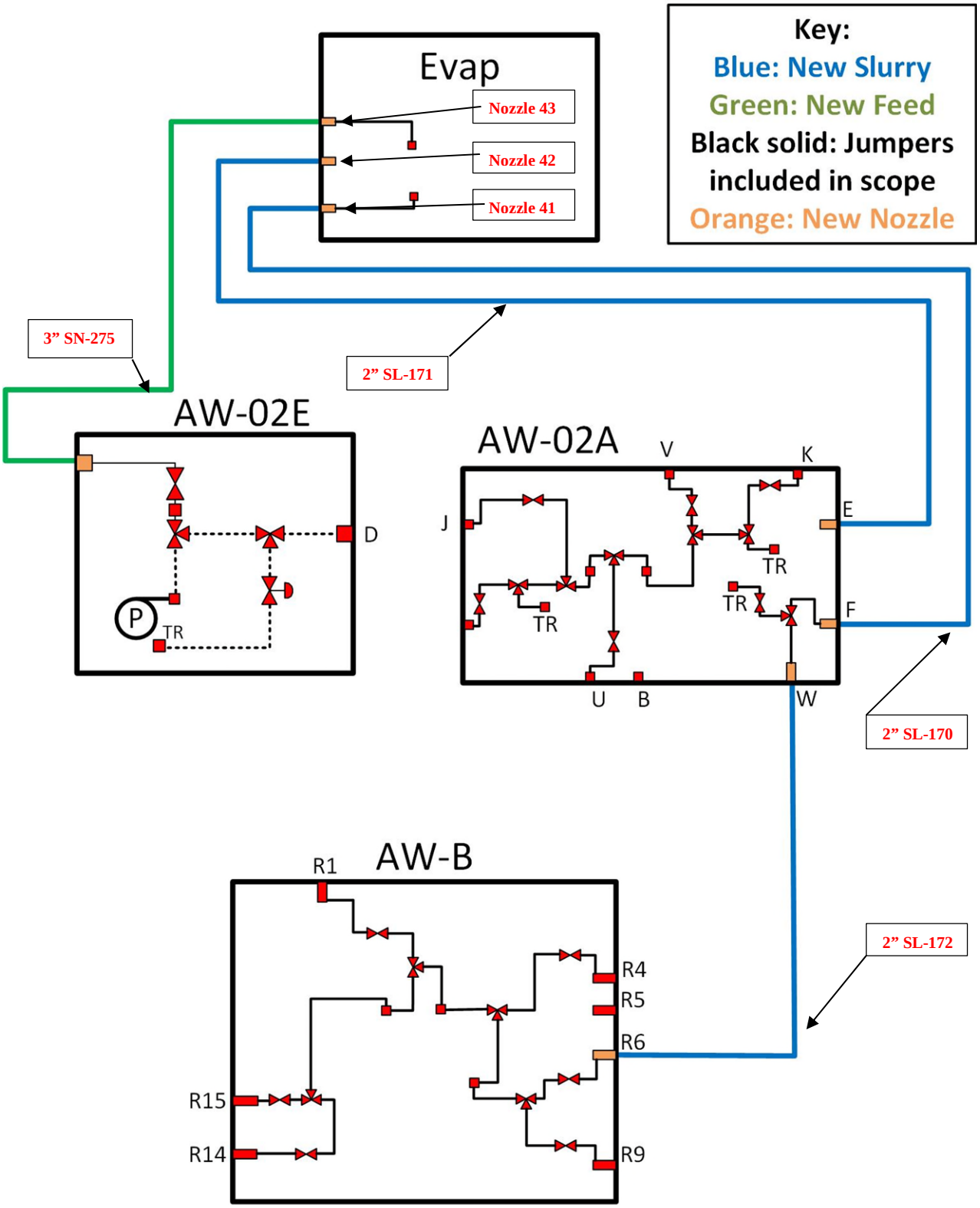

Figure 1: Overall Scope of 242-A Evaporator Transfer Line Replacement Project

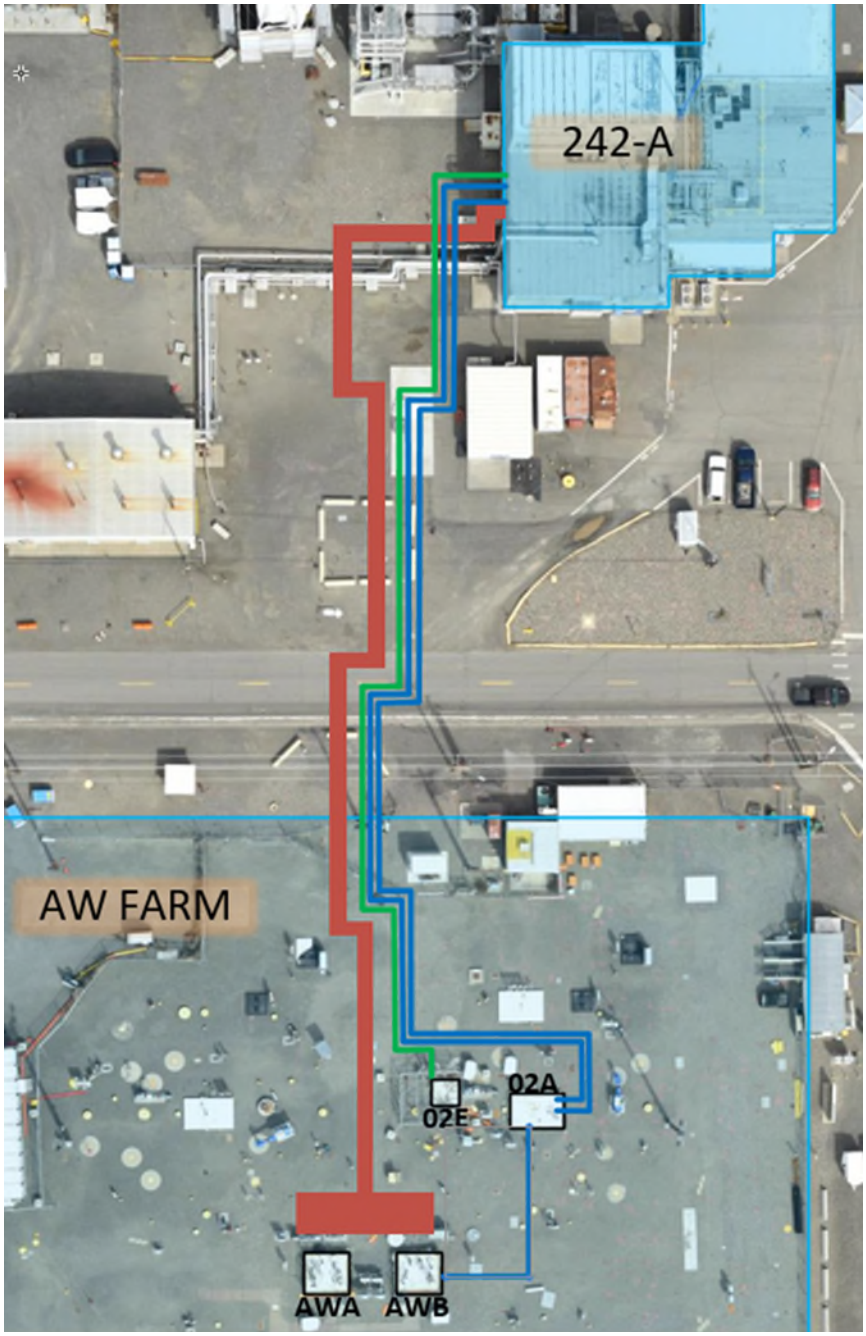

Figure 2: Overall Plan View of 242-A Evaporator Transfer Line Replacement Project

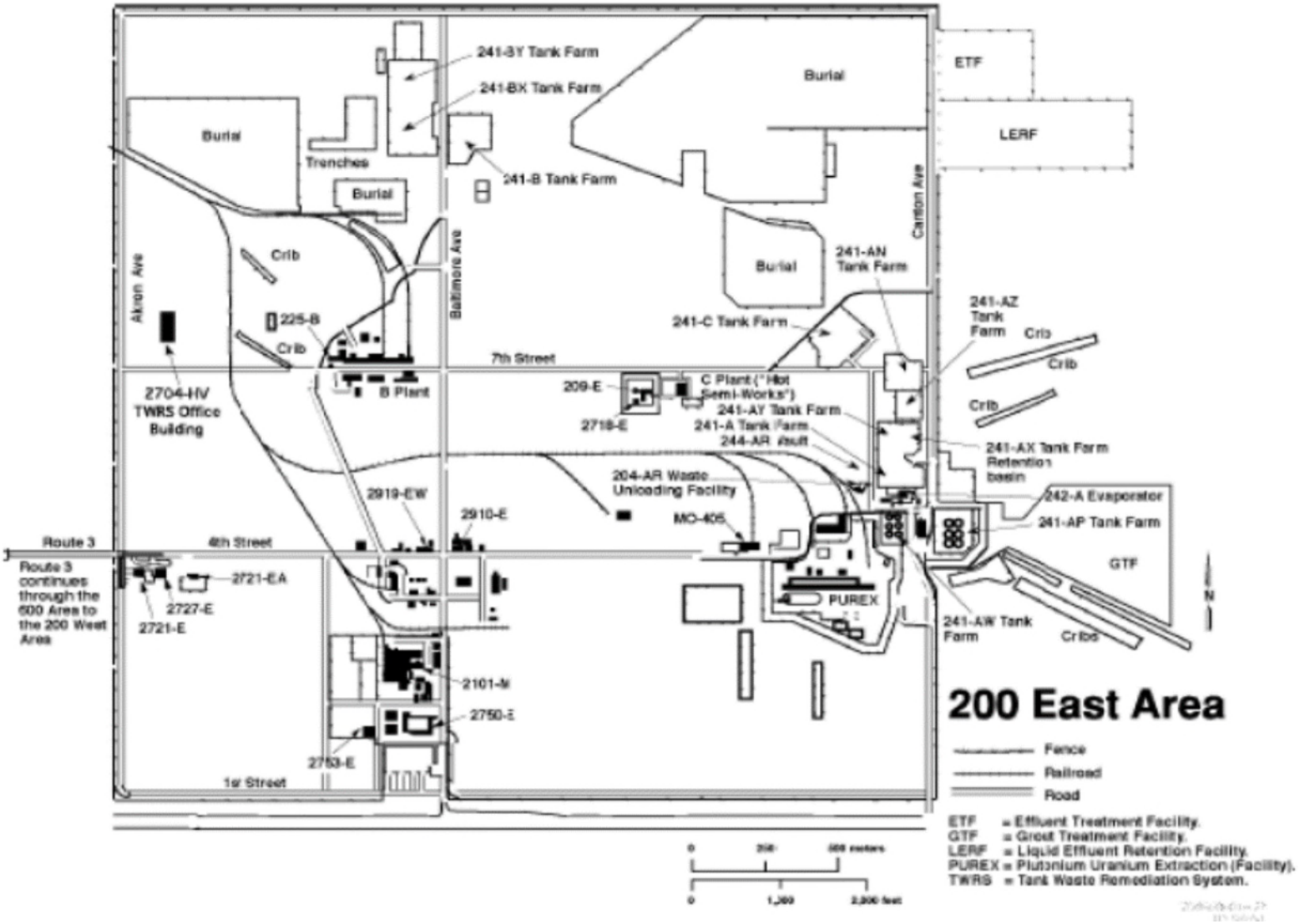

Figure 3: Facilities in the Hanford Site 200 East Area

Figure 4: Aerial Photograph Showing an Overview of the 242-A Evaporator Facility in the 200 East Area

Figure 5: Photograph of the Outside of the 242-A Evaporator Facility in the 200 East Area

Figure 6: Aerial View of the 242-A Evaporator Facility in the 200 East Area

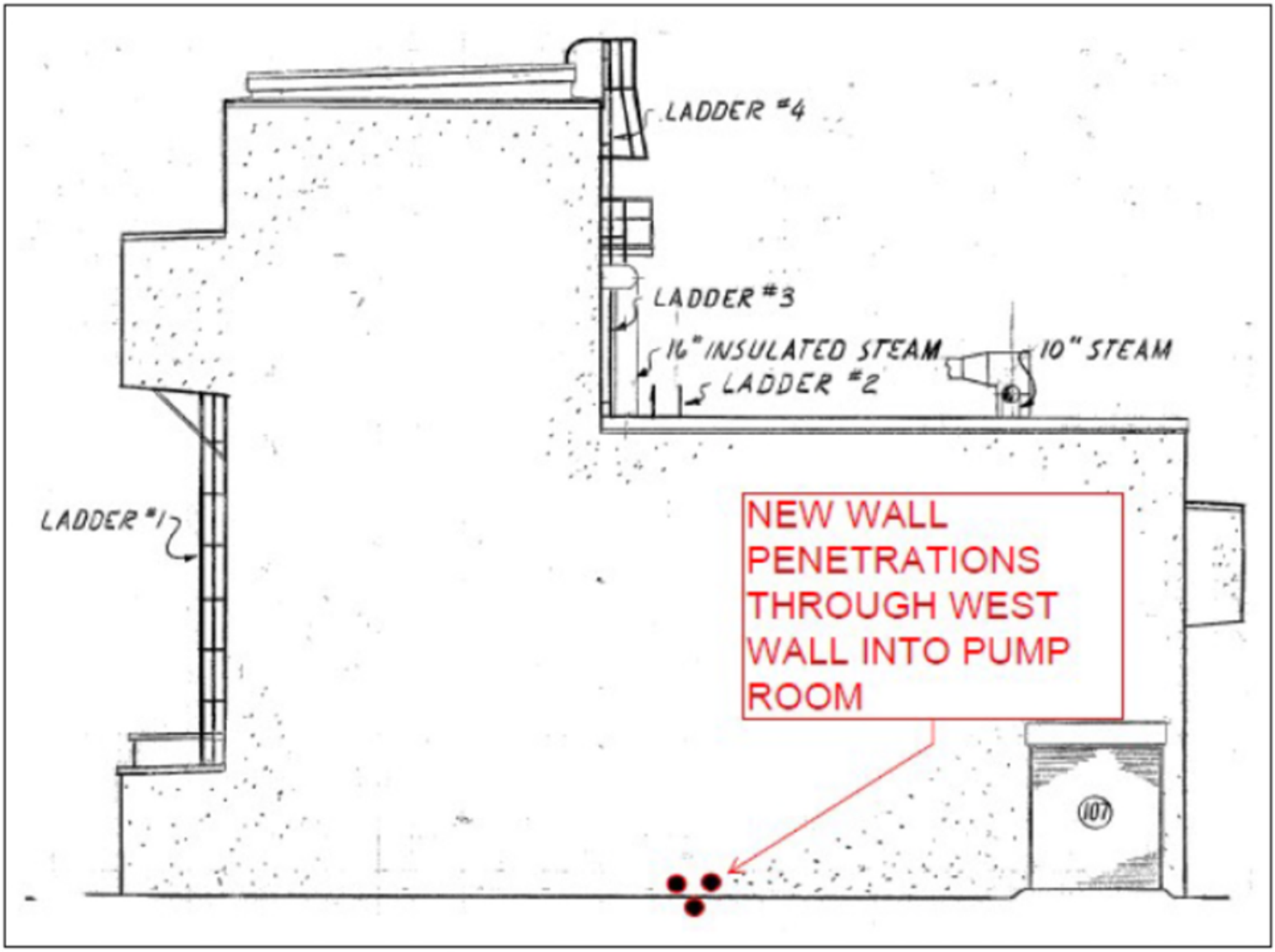

Figure 7: Approximate Locations of Wall Nozzle Penetrations through West Wall of 242-A Evaporator Building (RPP-CALC-63208)

Note that pipelines will be covered by soil per RPP-CALC-63227 and H-14-111860, Sheet 1. See Figures 12 and 13.

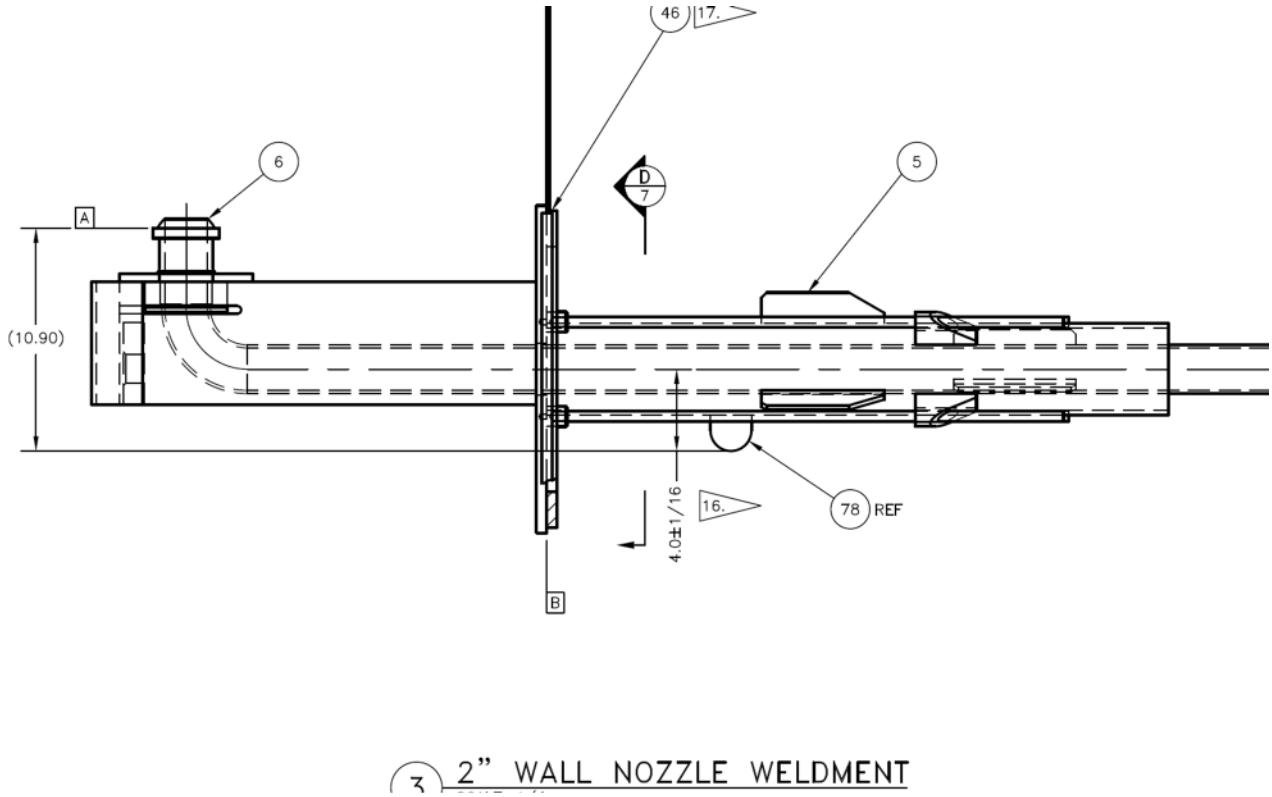

Figure 8: 242-A Pump Room 2" Wall Nozzle 41/42 Weldment (Drawing: H-14-111832, Sheet 2)

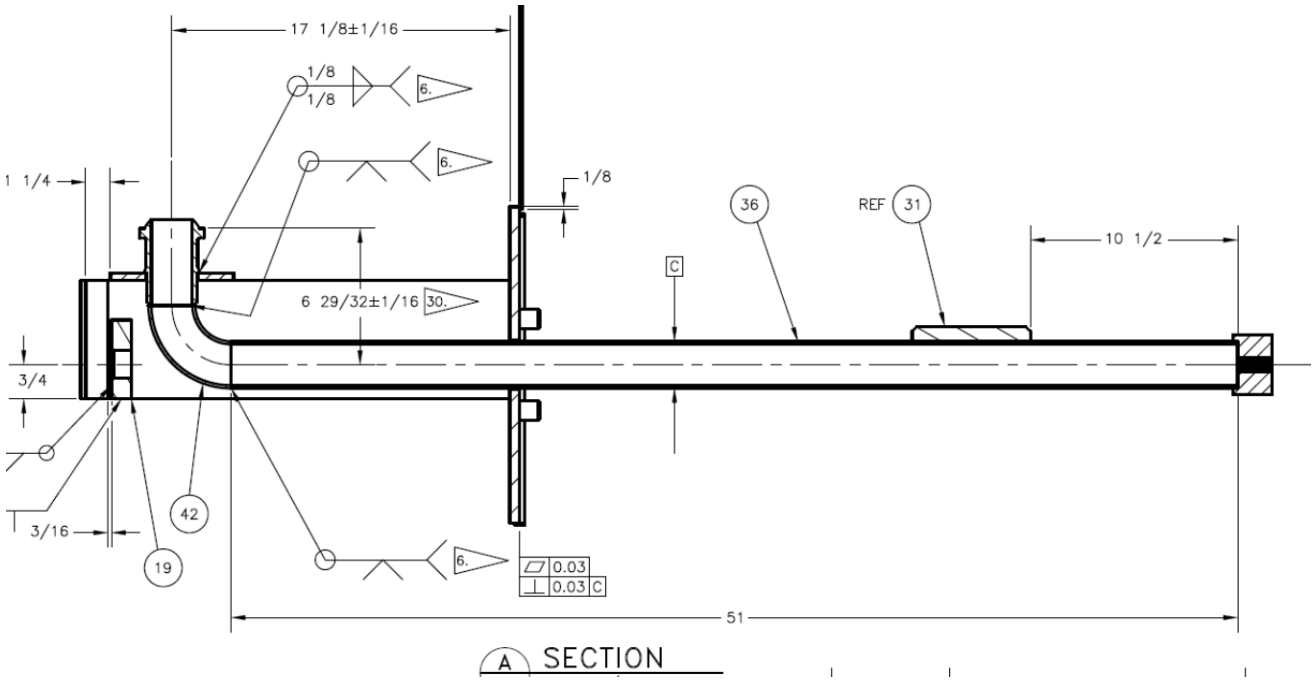

Figure 9: 242-A Pump Room 2" Wall Nozzle 41/42 Inner Pipe Weldment Section View (Drawing: H-14-111832, Sheet 3)

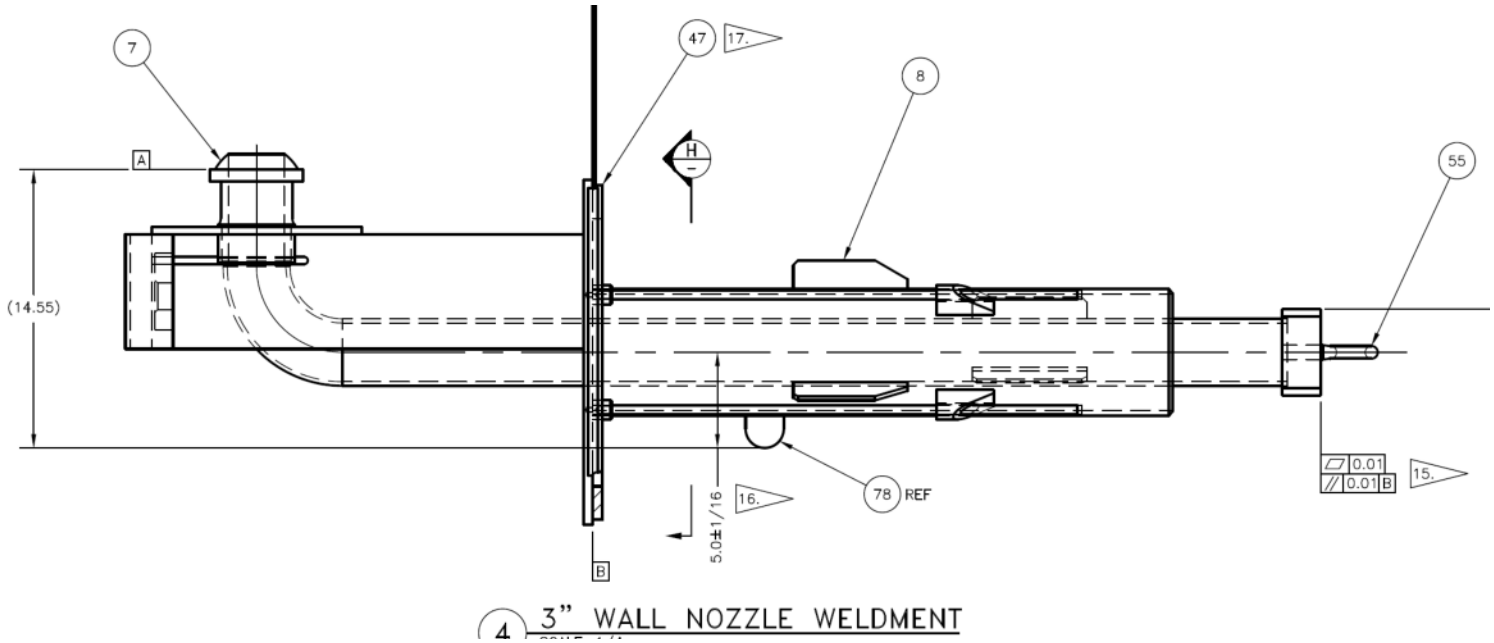

Figure 10: 242-A Pump Room 3" Wall Nozzle 43 Weldment (Drawing: H-14-111832, Sheet 4)

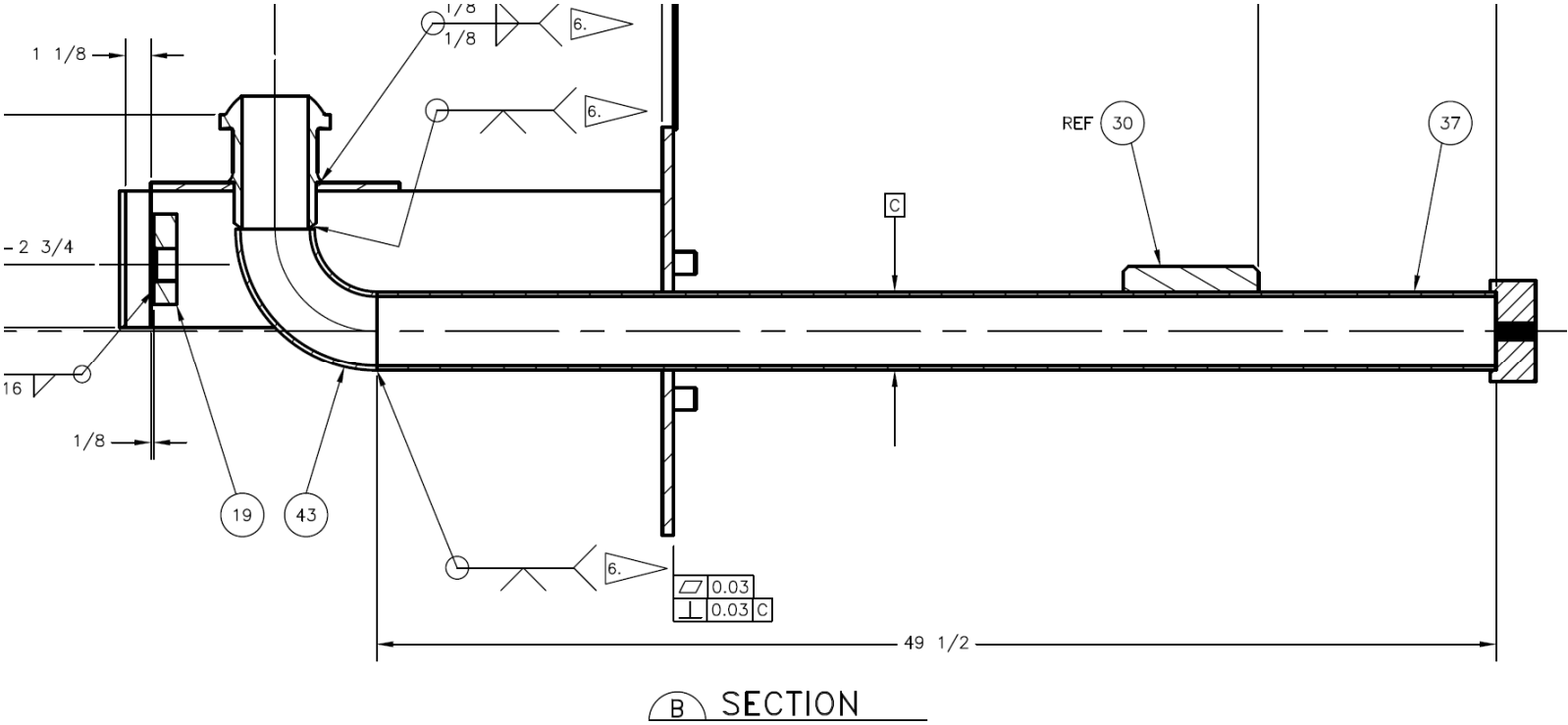

Figure 11: 242-A Pump Room 3" Wall Nozzle 43 Inner Pipe Weldment Section View (Drawing: H-14-111832, Sheet 5)

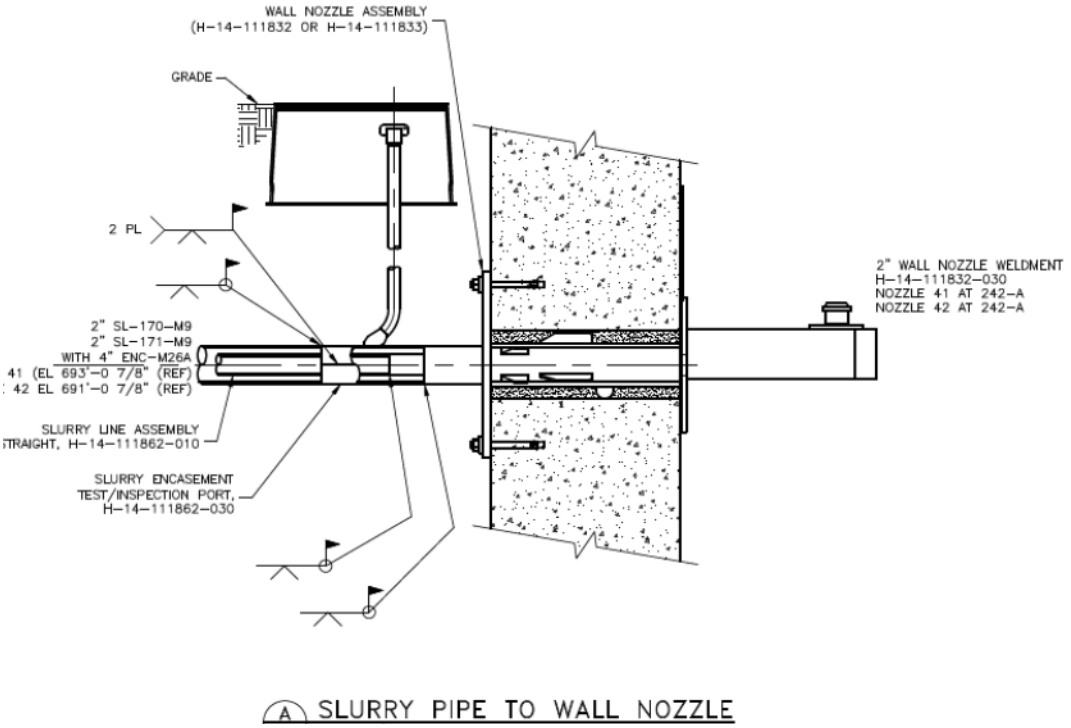

Figure 12: Slurry Pipe to Wall Nozzle Detail A (H-14-111860, Sheet 8)

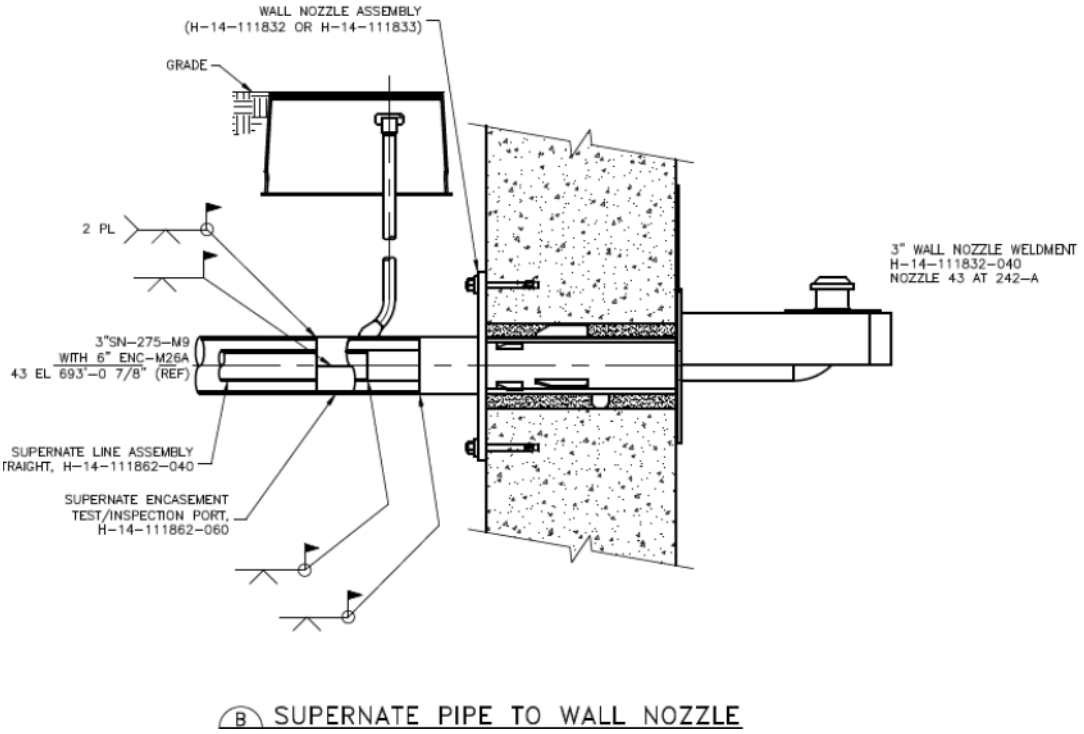

Figure 13: Supernate Pipe to Wall Nozzle Detail B (H-14-111860, Sheet 8)

1.2 DESIGN REVIEW REQUIREMENTS

Many of the components required for the transfer of dangerous or mixed waste are regulated by 40 CFR 265.192 and WAC 173-303-640(3) requirements. The CFR and WAC codes require an IQRPE review of the design of these components prior to installation.

As a basis for the IQRPE certification, a review is performed on a final version of the document design package as prepared and reviewed by WRPS. Documents such as drawings, calculations, Engineering Change Notices (ECNs), Engineering Design Transmittals (EDTs), and Technical Evaluations included in the design review package that are marked as final, and have signatures of the preparer, checker, and approver, are reviewed by the IQRPE as a completed document. All other documents will be reviewed as preliminary or supportive information.

The IQRPE maintains "independence" at all times. However, comments by others are considered by the IQRPE during the preparation of reports and plans. Only the IQRPE can implement changes to the master IQRPE documents.

1.3 DESIGN OVERVIEW FOR 242-A EVAPORATOR TRANSFER LINE REPLACEMENT PROJECT, 242-A PUMP ROOM STRUCTURAL MODIFICATIONS (WALL NOZZLES)

This Design Assessment Report is prepared for WRPS by an IQRPE to certify that the proposed tank system will have sufficient structural integrity and is acceptable for storing and treating dangerous waste per 40 CFR 265.192(a) and WAC 173-303-640(3)(a).

The specific components included as part of the IQRPE design assessment for the IQRPE Support to 242-A Evaporator Transfer Line Replacement Project, 242-A Pump Room Structural Modifications (Wall Nozzles) are listed below:

- <u>242-A Evaporator Transfer Line Replacement Project</u>
  - 242-A Evaporator Pump Room Structural Modification (Wall Nozzles)
    - 2" Wall Nozzle 41/42
    - 3" Wall Nozzle 43

The following sections list and briefly describe the 242-A Evaporator Transfer Line Replacement Project, 242-A Pump Room Structural Modifications (Wall Nozzles) components included in this design review.

1.3.1 Facility Structural Modifications

1.3.1.1 242-A Evaporator Pump Room Structural Modifications

The 242-A Evaporator Pump Room structural modifications include installation of three (3) new wall nozzles: 41, 42, and 43 to support this Project (H-14-111832, *Wall Nozzle Assemblies, 242-A Pump Room and* ECN-715004, *Core Drill and Install Wall Nozzle 41, 42, and 43 Assemblies at 242-A Evaporator Pump Room*). The wall nozzle assemblies are designed to be installed remotely with the 242-A Evaporator gantry crane. Core drilling (8" for nozzles 41 and 42 and 10" for nozzle

43) will be performed outside of the pump room through the 22” thick reinforced concrete wall of the 242-A Building. The spaces between the encasement pipes and the core drilled holes are filled with grout.

Nozzles 41 and 42 are 2” schedule 40, ASTM A312, TP 316L primary pipe with 4” schedule 40, ASTM A53 or A106, Grade B exterior encasement piping. Inside 242-A Pump Room, both of these nozzles are provided with 2” PUREX male nozzles (H-2-90185, *Male Nozzle 2” PUREX*).

Nozzles 43 is 3” schedule 40, ASTM A312, TP 316L primary pipe with 6” schedule 40, ASTM A53 or A106, Grade B exterior encasement piping. Inside the 242-A Pump Room, this nozzle is provided with a 3” PUREX male nozzle (H-2-90186, *Male Nozzle 3” PUREX*).

Nozzle 41 will be connected to pipe in pipe slurry transfer line AW02A-WT-WTL-SL-170 (2” primary with 4” encasement pipe) which is routed to central pump pit AW-02A, nozzle F.

Nozzle 42 will be connected to pipe in pipe slurry transfer line AW02A-WT-WTL-SL-171 (2” primary with 4” encasement pipe) which is routed to central pump pit AW-02A, nozzle E.

Nozzle 43 will be connected to pipe in pipe supernatant feed line AW02E-WT-WTL-SN-275 (3” primary with 6” encasement pipe) routed to feed pump pit AW-02E, nozzle F.

1.4 SCOPE OF IQRPE DESIGN ASSESSMENT

This IQRPE design assessment includes a comprehensive review of the IQRPE support to the 242-A Evaporator Transfer Line Replacement Project, 242-A Pump Room Structural Modifications (Wall Nozzles) design package per 40 CFR 265.192 and WAC 173-303-640(3).

1.4.1 Portions of the 242-A Evaporator Transfer Line Replacement Project, 242-A Pump Room Structural Modifications (Wall Nozzles) Included in Scope for IQRPE Certification

Documents included in this design review for the IQRPE Support to 242-A Evaporator Transfer Line Replacement Project, 242-A Pump Room Structural Modifications (Wall Nozzles) Project include:

- Calculations,
- Technical Reports,
- Design and Fabrication Drawings,
- ECNs,
- Piping and Instrumentation Drawings (P&IDs).

A list of documents referenced by the IQRPE as part of this Design Assessment Report is included in Section 4.0.

1.4.2 Portions of the 242-A Evaporator Transfer Line Replacement Project, 242-A Pump Room Structural Modifications (Wall Nozzles) Not Included in Scope for IQRPE Certification

This IQRPE review was limited only to IQRPE Support to 242-A Evaporator Transfer Line Replacement Project, 242-A Pump Room Structural Modifications (Wall Nozzles) Project components, and no other systems or components were evaluated.

2.0 ASSESSMENT SUMMARY

As described below in Section 2.2, systems within the IQRPE scope of this assessment are adequately designed to prevent failure caused by corrosion or by structural loads imposed by the system's intended service. The system design complies with the applicable requirements of 40 CFR 265.192 and WAC 173-303-640(3) design documents that were reviewed as part of this assessment are referenced in Section 4.0.

2.1 CODES, STANDARDS, AND REGULATIONS

The codes, standards, and regulations specifically used during the preparation of this certification are referenced, as necessary, throughout this report. A complete list of applicable references is contained in Section 4.0.

2.2 BASIS OF DESIGN

The primary operating characteristics of the IQRPE Support to 242-A Evaporator Transfer Line Replacement Project, 242-A Pump Room Structural Modifications (Wall Nozzles) Project are presented in Table 2.

Table 2: 242-A Evaporator Transfer Line Replacement Project, 242-A Pump Room Structural Modifications (Wall Nozzles) Operating Characteristics

Equipment	Operating Characteristic
242-A Pump Room 2" Wall Nozzles 41 and 42	• Encasement pipe: 4" Sched. 40 • Primary pipe: 2" Sched. 40 • Design temperature encasement & primary: 200 °F • Encasement pipe design pressure: 60 psig. • Primary pipe design pressure: 620 psig.
242-A Pump Room 3" Wall Nozzle 43	• Encasement pipe: 6" Sched. 40 • Primary pipe: 3" Sched. 40 • Design temperature encasement & primary: 200 °F • Encasement pipe design pressure: 60 psig. • Primary pipe design pressure: 620 psig.

2.2.1 Structural Design Standards

The 40 CFR 265.192 and WAC 173-303-640(3) require that an IQRPE certify that the proposed tank system will have sufficient structural integrity and is acceptable for storing and treating dangerous waste. This assessment must show, in accordance with 40 CFR 265.192(a) and WAC 173-303-640(3)(a), that the foundation, structural support, seams, connections, and pressure controls are adequately designed and that the tank system has sufficient structural strength, compatibility with the waste to be stored and treated, and corrosion protection to ensure that it will not collapse, rupture, or fail.

The 242-A Evaporator Transfer Line Replacement Project, 242-A Pump Room Structural Modifications (Wall Nozzles) equipment and structures are analyzed and designed in accordance with RPP-CALC-63208, *Structural Analysis for the 242-A Pump Room Wall Nozzle Assemblies Plus Counterweight Lifting Devices*.

Mechanical calculations performed for the nozzle piping are prepared in accordance with piping code requirements in ASME B31.3, *Process Piping*, and are detailed in RPP-CALC-63211, *ASME B31.3 Analyses of the New SL-170, SL-171, SL-172 and SN-275 Waste Transfer Lines in 241-AW Tank Farm*.

The overall positioning of the nozzle locations, relative to the 242-A Evaporator Pump Room, was established from a review of facility drawings (RPP-CALC-63214, *242-A Evaporator Pump Room Jumpers Supporting Analyses*, Section 3.1 *Determination of Nozzle Locations*).

RPP-CALC-63227, *DST Replacement Waste Transfer Lines Freeze Protection Analyses 241-AW to 242-A Evaporator* addressed freeze protection for the exterior portions of the 2” Wall Nozzle 41/42 and the 3” Wall Nozzle 43.

Calculations include the following areas as applicable:

- Pump room structural wall modifications.
- Pipe wall thickness calculations for pressure.
- Stress calculations for sustained loads due to pressure, dead load, and other sources.
- Stress calculations for displacements such as those associated with thermal loads.
- Stress calculations for occasional loads such as pressure, weight, and earthquake loads.
- Stress calculations for transients such as water hammer.
- Freeze protection.

WAC 173-303-640(3) defines backfill requirements to provide structural support to prevent excessive settlement and corrosion. The corrosion assessment is addressed in Sections 2.2.3 and 2.2.8 of this report.

Where possible, the IQRPE has reviewed the design package to ensure that the following activities have been incorporated into the technical documents:

- Calculations of thickness account for the assumed corrosion rate.
- Seismic considerations appropriate for the risk zone are included in the structural calculations.
- Foundations are deep enough in the ground to eliminate frost heave per the requirements of 40 CFR 265.192(a)(5)(iii) and WAC 173-303-640(3)(a)(v)(C). New equipment is either attached to existing tank structures or designed to accommodate frost heave.

- Adequate freeze protection is provided.

The placement of the three (3) wall nozzles within the concrete wall structure of the 242-A Pump Room eliminates any concerns dealing with frost heave and back fill requirements to prevent settlement. The pump room is temperature controlled and the portion of the wall nozzles projecting into the pump room will not be subjected to freezing temperatures nor will they be in contact with the earth. The portion of the wall nozzles projecting the exterior of the 242-A concrete wall also are not subjected to freezing temperatures (RPP-CALC-63227 and H-14-111860, *DST Replacement Transfer Lines Plan and Profile 241-AW to 242-A Evaporator*). All exposed exterior carbon steel surfaces of the encasement piping are painted with Scotchkote™[1] 134 fusion bonded epoxy (H-14-111832, Sheet 1; Note 10).

RPP-CALC-63208 concluded the 242-A Pump Room wall has adequate capacity for the core drilled holes associated with the Wall Nozzle 41, 42 and 43. The maximum demand capacity ratio was 0.345 for bending and 0.39 for shear. The anchorage for the nozzle assemblies was also calculated and had a maximum demand capacity ratio of 0.52 with concrete breakout being the controlling mode.

RPP-CALC-63211(Section 8.4) concluded the wall nozzles meet ASME B31.3 requirements. RPP-CALC-63211 determined that the highest loadings on the wall nozzles was 72% of the allowable loading The maximum loading occurs from sustained and seismically induced stresses.

The following subsections highlight the IQRPE structural design standard review for each of the major IQRPE Support to 242-A Evaporator Transfer Line Replacement Project, 242-A Pump Room Structural Modifications (Wall Nozzles) Project components and also identify any specific exceptions to this IQRPE certification as they relate to the structural review.

2.2.2 242-A Evaporator Transfer Line Replacement Project, 242-A Pump Room Structural Modifications (Wall Nozzles)

2.2.2.1 Structural Modification (Wall Nozzles)

The Project modifies the existing west wall of the 242-A Evaporator Pump Room by installing three (3) new wall nozzles. One (1) wall nozzle (43) will interface with waste feed transfer line SN-275 and the other two (2) wall nozzles 41 and 42 will interface with slurry out transfer lines SL-170 and SL-171 respectively.

The installation process will include structural coring, wall nozzle placement, anchoring, and secondary containment installation. The wall nozzles serve as the pressure boundary for the system and are required to meet ASME B31.3 requirements. The concrete wall of the 242-A Pump Room wall has adequate capacity to accommodate the three (3) wall penetrations for the installation of the new nozzles (RPP-CALC-63208, RPP-CALC-63211, RPP-CALC-63214, and ECN-715004).

The IQRPE concludes that the appropriate structural considerations for the 242-A Evaporator Transfer Line Replacement Project, 242-A Pump Room Structural Modifications (Wall Nozzles) have been made.

[1] Scotchkote is a trademark of 3M Electrical Markets Division, Austin, TX

2.2.2.2 242-A Pump Room 2" Wall Nozzles 41 and 42

The structural carbon and stainless steel components of the 2" wall nozzles (41 and 42) (H-14-111832) are welded in accordance with AWS D1.1, *Structural Welding Code – Steel* or AWS D1.6, *Structural Welding Code – Stainless Steel*, as applicable, for statically loaded criteria. The drawings and analysis (H-14-111832, RPP-CALC-63208, RPP-CALC-63211, RPP-CALC-63214 and ECN-715004) were reviewed to ensure that provisions are incorporated for proper loading, support, basis of design, and compliance with ASME B31.3. The calculations show the wall nozzles and their support designs are adequate. The wall nozzles and support calculations considered dead loads, operating loads, thermal loads, seismic loads, and transient loads.

The IQRPE concludes that the appropriate structural considerations for the 2" Wall Nozzles 41 and 42 have been made.

2.2.2.3 242-A Pump Room 3" Wall Nozzle 43

The structural carbon and stainless steel components of the 3" Wall Nozzle (43) (H-14-111832) are welded in accordance with AWS D1.1 or AWS D1.6, as applicable, for statically loaded criteria. The drawings and analysis (H-14-111832, RPP-CALC-63208, RPP-CALC-63211, RPP-CALC-63214 and ECN-715004) were reviewed to ensure that provisions are incorporated for proper loading, support, basis of design, and compliance with ASME B31.3. The calculations show that the wall nozzle and its support design is adequate. The wall nozzle and its support calculations considered dead loads, operating loads, thermal loads, seismic loads, and transient loads.

The IQRPE concludes that the appropriate structural considerations for 3" wall nozzle 43 have been made.

2.2.2.4 Structural Design Exceptions

Based on the above review, there are no IQRPE Certification exceptions to the structural design standards review.

2.2.2.5 Structural Design Assessment Conclusion

The IQRPE concurs that this design basis meets the requirements of 40 CFR 264.192(a) and WAC 173-303-640(3)(a).

2.2.3 Waste Compatibility

Regulations located in 40 CFR 265.192(a) and WAC 173-303-640 (3)(a) require tank systems be compatible with the wastes stored, treated, transported, or otherwise handled.

This section documents the waste compatibility and corrosion investigation of the three (3) wall nozzles designed for installation in the concrete wall of the 242-A Pump Room for the IQRPE Support to 242-A Evaporator Transfer Line Replacement Project, 242-A Pump Room Structural Modifications (Wall Nozzles) Project. The materials for the wall nozzle were obtained from drawing H-14-111832. The materials of construction for wall nozzle components which will either be in contact with tank waste or have the potential to come into contact with tank waste, are summarized in Table 3 below.

Table 3: 242-A Evaporator Transfer Line Replacement Project, 242-A Pump Room Structural Modifications (Wall Nozzles) Materials of Construction

Item	Drawing Location	Description	Item #	Component Materials / Notes
2" Wall Nozzle Assembly	H-14-111832, Sheets 2 and 3	Primary Pipe: ▪ 2-in. ▪ Schedule 40 ▪ Seamless	36	▪ ASTM A312, TP 316L
		Encasement Pipe: ▪ 4-in. ▪ Schedule 40 ▪ Seamless	38	▪ ASTM A53 or A106
		Wing: Spacer between primary and encasement	31 and 33	▪ ASTM A240, Type 304/304L
		Elbow: ▪ 2-in. ▪ Schedule 40 ▪ 90° LR ▪ Seamless	42	▪ ASTM A403, WP 316L
		PUREX Nozzle (H-2-90185; RPP-11596): ▪ 2-in. ▪ Schedule 40	63	▪ ASTM A995, Grade 1B
3" Wall Nozzle Assembly	H-14-111832, Sheets 4 and 5	Primary Pipe: ▪ 3-in. ▪ Schedule 40 ▪ Seamless	37	▪ ASTM A312, TP 316
		Encasement Pipe: ▪ 6-in. ▪ Schedule 40 ▪ Seamless	39	▪ ASTM A53 or A106
		Wing: Spacer between primary and encasement	30 & 79	▪ ASTM A240, Type 304/304L
		Elbow: ▪ 3-in. ▪ Schedule 40 ▪ 90° LR ▪ Seamless	43	▪ ASTM A403, WP 316L
		PUREX Nozzle (H-2-90186; RPP-11596: ▪ 3-in. ▪ Schedule 40	64	▪ ASTM A995, Grade 1B

2.2.3.1 Anticipated Chemistry and Controls

All wall nozzle materials in contact with tank waste are stainless steel. Carbon steel is used only for spacers and encasement piping. The stainless steel material utilized in the fabrication of the PUREX nozzles is specified in RPP-11596, *Nozzle, Remote Connector, Stainless Steel*. Both of these materials have a long history of successful use at Hanford and other nuclear waste sites. Tank waste conditions that contribute to corrosion are strictly monitored and controlled for compliance with waste specifications in accordance with Table 1.5.1-1, *Waste Chemistry Limits for All DST*

Waste except the Interstitial Liquid in Tanks 241-AN-102, AN-106, AN-107, AY-101, and AY-102 in OSD-T-151-00007, *Operating Specifications for the Double-Shell Storage Tanks.*

The maximum designed corrosion of the wall nozzle piping is 0.01-in. based on a 50-year service life (0.2 mils per year) (RPP-CALC-63211). Most of the wall nozzle piping is installed within the concrete structure of the 242-A Pump Room. This limits corrosion on the exterior from weather elements, and the waste composition that will be pumped through the wall nozzle assembly is strictly controlled, as noted earlier. The bounding fluid properties permitted by Table 1.5.1-1 of OSD-T-151-00007 will not contribute to a corrosion rate greater than the design corrosion rate of 0.2 mils per year.

The wall nozzles are constructed with dissimilar materials. The primary pipe and wing spacers are stainless steel and the encasement pipe is carbon steel. The wing spacers are welded to the primary pipe and make contact with the inside diameter of the encasement pipe. All exposed exterior carbon steel surfaces of the encasement piping are painted with Scotchkote™[2] 134 fusion bonded epoxy (H-14-111832, Sheet 1; Note 10). The stainless steel materials in contact with waste are not at risk of galvanic corrosion.

2.2.3.2 Waste Compatibility Exceptions

Based on the above review, there are no IQRPE Certification exceptions to the anticipated waste compatibility or corrosion issues with the 242-A Evaporator Transfer Line Replacement Project, 242-A Pump Room Structural Modifications (Wall Nozzles) materials of construction.

2.2.3.3 Waste Compatibility Assessment Conclusion

The IQRPE concurs that this design basis meets the requirements of 40 CFR 264.192(a) and WAC 173-303-640(3)(a).

2.2.4 Pressure Control System

40 CFR 265.192(a) and WAC 173-303-640(3)(a) require that an IQRPE certify that the proposed tank system has been designed with appropriate pressure control systems. The various components of the IQRPE Support to 242-A Evaporator Transfer Line Replacement Project, 242-A Pump Room Structural Modifications (Wall Nozzles) were evaluated for pressure control issues, and their details are presented in the sections below.

2.2.4.1 242-A Pump Room 2” Wall Nozzles 41 and 42

The drawings and analysis for the 2” wall nozzles were reviewed for pressure control issues (H-14-111832 and RPP-CALC-63211).

Each wall nozzle utilizes one (1) each PUREX 2-in. male nozzle in its construction (H-14-111832 and H-2-90185).

The design pressure for the primary piping of the 2” wall nozzles is 620 psig and the design pressure of the encasement piping is 60 psig (H-14-111832). The design temperature for both the

[2] Scotchkote is a trademark of 3M Electrical Markets Division, Austin, TX

primary and encasement piping is 200 °F. The primary piping is required to undergo hydrostatic testing at 930 psig. The encasement piping is required to undergo pneumatic testing at 66 psig.

The maximum pressure in the 242-A Evaporator Pump Room slurry piping is controlled by a safety significant pressure relief valve PSV-PB2-1, which limits the pressure to 275 psig, less than the 620 psig design pressure of the slurry piping. There is no need for any over-pressurization protection for the piping.

RPP-CALC-63211 discussed the water hammer analysis for the wall nozzles and stated that the analysis is bounded by satisfying the requirements contained in Appendix D of RPP-RPT-58773, *Assessment of Safety Significant Piping Jumpers to Assure Excess Load Capacity for Potential Water Hammer (Leak Check and Flush) Events*. The requirements established in RPP-RPT-58773 were determined to have been met. This eliminated the need to perform a water hammer analysis for the 2” wall nozzles.

RPP-CALC-63211 concluded the 2” wall nozzles meet ASME B31.3 requirements and are within code allowable stresses for forces applied by gravity, thermal expansion, internal pressure, seismic and impact loads.

The IQRPE concludes that the appropriate pressure control considerations for 242-A Pump Room 2” wall nozzles 41 and 42 have been made.

2.2.4.2 242-A Pump Room 3” Wall Nozzle 43

The drawings and analysis for the 3” Wall Nozzle were reviewed for pressure control issues (H-14-111832 and RPP-CALC-63211).

The wall nozzle utilizes one (1) each PUREX 3-in. male nozzle in its construction (H-14-111832 and H-2-90186).

The design pressure for the primary piping of the 3” wall nozzle is 620 psig and the design pressure of the encasement piping is 60 psig (H-14-111832). The design temperature for both the primary and encasement piping is 200 °F. The primary piping is required to undergo hydrostatic testing at 930 psig. The encasement piping is required to undergo pneumatic testing at 66 psig. The maximum pressure in the supernatant piping will occur when the pump is deadheaded. The pump dead head as tested with water was found to be 87 psig. At a maximum specific gravity of 1.6 g/ml, the maximum installed pressure will be 139 psig (87 × 1.6), which is less than the 620 psig design pressure of the new transfer line piping; there is no need for any over-pressurization protection for the piping.

The water hammer analysis for the wall nozzle is bounded by satisfying the requirements contained in Appendix D of RPP-RPT-58773. The requirements established in RPP-RPT-58773 were determined to have been met; this eliminated the need to perform a water hammer analysis for the 3” wall nozzle.

RPP-CALC-63211 concluded the 3” wall nozzle met ASME B31.3 requirements and is within code allowable stresses for forces applied by gravity, thermal expansion, internal pressure, seismic and impact loads.

The IQRPE concludes that the appropriate pressure control considerations for 242-A Pump Room 3” Wall Nozzle 43 have been made.

2.2.4.3 Pressure Control System Exceptions

Based on the above review, there are no IQRPE Certification exceptions to the pressure control system review.

2.2.4.4 Pressure Control System Conclusion

The IQRPE concurs that this design basis meets the requirements of 40 CFR 265.192 and WAC 173-303-640(3)(a).

2.2.5 Secondary Containment System

The 40 CFR 265.193 and WAC 173-303-640(4) requires that an IQRPE certify that the proposed tank system has been designed with an appropriate secondary containment system. Secondary containment for tank systems that store, accumulate, or treat dangerous waste must be designed and installed to meet the requirements of 40 CFR 265.193(b) and WAC 173-303-640(4)(b).

The secondary containment for the wall nozzles of the 242-A Evaporator Transfer Line Replacement Project, 242-A Pump Room Structural Modifications (Wall Nozzles) Project is accomplished by two (2) methods. The portion of the wall nozzles that project into the pump room rely on the floor and structure of the 242-A Evaporator Pump Room for secondary containment. The pump room is equipped with a sump well to collect drainage. The liquid collected in the sump in turn is routed to Tank 241-AW-102 via a 10” drain line (10”DR-334-M27, H-2-98995, Sheet 2, *P&ID Drain System*). The portions of the wall nozzles outside of the pump room consist of a primary pipe inside an encasement which is directly connected to the secondary containment provided by the design of new transfer lines SL-170, SL-171, and SN-275 (H-14-111860). These lines are constructed so that the low point of the transfer line’s encasement drains into a pit. The pit’s installed leak detector is in turn used for the purpose of low point leak detection (MT-50400, *242-A Evaporator Waste Transfer Line Replacement*).

Conclusions from the review of the design standards for the IQRPE Support to 242-A Evaporator Transfer Line Replacement Project, 242-A Pump Room Structural Modifications (Wall Nozzles) Project and the previous 242-A Integrity Assessment Report (RPP-RPT-60098) are summarized below:

- The IQRPE Support to 242-A Evaporator Transfer Line Replacement Project, 242-A Pump Room Structural Modifications (Wall Nozzles) Project is designed to prevent any migration of wastes out of the secondary containment system to the soil, groundwater, or surface water at any time during the use of the tank system.
- The system is constructed of materials that are compatible with the wastes to be placed in the system.
- The system has been specified to have sufficient strength to withstand stresses due to static head during a release, pressure gradients, climatic conditions, and other stresses resulting from daily operations.
- A leak-detection system for liquids has been provided.
- The system is sloped or otherwise designed or operated to drain and remove liquids resulting from leaks, spills, or precipitation.

The IQRPE concludes that the appropriate secondary containment considerations have been made.

2.2.5.1 Secondary Containment System Exceptions

There are no exceptions to the IQRPE certification of the secondary containment review assessment.

2.2.5.2 Secondary Containment System Conclusion

The IQRPE concurs that this design basis meets the requirements of 40 CFR 265.193(b) and WAC 173-303-640(4)(b).

2.2.6 Ancillary Equipment Design

40 CFR 265.192 and WAC 173-303-640(3) require that an IQRPE certify that the proposed tank system has been designed with appropriate ancillary equipment in accordance with the requirements of 40 CFR 265.192(e), and WAC 173-303-640(3)(f) and (4)(f). WAC 173-303-040, *Definitions*, defines "Ancillary Equipment" as any device including, but not limited to, such devices as piping, fittings, flanges, valves, and pumps, that is used to distribute, meter, or control the flow of dangerous waste from its point of generation to a storage or treatment tank(s), between dangerous waste storage and treatment tanks to a point of disposal on-site, or to a point of shipment for disposal off-site. A review of the ancillary equipment design is normally part of the IQRPE review. The scope of this review includes components listed as in-scope in Section 1.3 and as described in the review sections above. Piping, fittings, flanges, valves, and pumps have been evaluated by the IQRPE throughout this report, which includes all ancillary equipment in-scope for this design assessment. No other ancillary equipment was identified.

2.2.6.1 Ancillary Equipment Design Exceptions

Based on the above review, there are no IQRPE Certification exceptions to the ancillary equipment design review.

2.2.6.2 Ancillary Equipment Design Conclusion

The IQRPE concurs that this design basis meets the requirements of 40 CFR 265.192 and WAC 173-303-640(3).

2.2.7 P&ID Review

The P&ID details for the IQRPE Support to 242-A Evaporator Transfer Line Replacement Project, 242-A Pump Room Structural Modifications (Wall Nozzles) Project are depicted on H-14-020802, Sheet 6, *Waste Transfer System (WT) O&M System P&ID* and ECN-715004.

The IQRPE concludes that the appropriate P&ID review has been made.

2.2.8 Corrosion Assessment

40 CFR 265.192 and WAC 173-303-640(3) require an IQRPE corrosion assessment of only the external portion of the primary containment that is in direct contact with soil or water. The components of the IQRPE Support to 242-A Evaporator Transfer Line Replacement Project, 242-

A Pump Room Structural Modifications (Wall Nozzles) Project are located in the 242-A Pump Room wall and will not be in contact with soil or water.

Additional aspects of corrosion are discussed in the Waste Compatibility Section 2.2.3.

The IQRPE concludes that appropriate corrosion considerations have been made.

2.2.8.1 Corrosion Assessment Exceptions

Based on the above requirements, there are no IQRPE Certification exceptions to the corrosion assessment review with the materials of the 242-A Pump Room wall nozzles.

2.2.8.2 Corrosion Assessment Conclusion

The IQRPE concurs that this design basis meets the requirements of 40 CFR 265.192 and WAC 173-303-640(3).

2.2.9 Recommended Inspection Schedule for Future Integrity Assessment

Per the requirements of WAC 173-303-640(2)(e), “a schedule for conducting integrity assessments over the life of the tank to ensure that the tank retains its structural integrity and will not collapse, rupture, or fail. The schedule must be based on the results of past integrity assessments, age of the tank system, materials of construction, characteristics of the waste, and any other relevant factors.”

The new equipment installed under this document includes:

- 2” Wall Nozzles 41 and 42
- 3” Wall Nozzle 43

The design life of the 242-A Evaporator Transfer Line Replacement Project components (MT-50400) is:

- Pit cover blocks/plates shall have a design life of 35 year.
- Removable components beneath cover blocks/plates, including valves and jumpers, should have a design life of 25 years without maintenance, where practical.
- Buried waste transfer line piping shall have a design life of 50 years.

Because these items are new, no prior integrity assessments have been completed. Since these items are expected to be installed in 2020, the age of these elements is new. The materials of construction are compatible with the wastes as detailed in Section 2.2.3 of this report. The characteristics of the wastes is also covered in that section. Additionally, corrosion is evaluated in Section 2.2.8 of this report. To allow time for an integrity assessment, it is recommended that a complete Integrity Assessment Report be completed of the above tank system elements within 15 years after initial installation or first contact with waste, whichever is later. It is anticipated these new elements of the tank system will be evaluated as part of the entire system and will be included in the overall IQRPE Integrity Assessment Report for this system in accordance with the interval for integrity assessment established by the operator for the system as long as the scheduled integrity assessment falls within the recommended period provided here.

3.0 DESIGN REVIEW ASSESSMENT CERTIFICATIONS

The IQRPE Support to 242-A Evaporator Transfer Line Replacement Project, 242-A Pump Room Structural Modifications (Wall Nozzles), as previously described, has been reviewed by the IQRPE and was assessed to be in compliance with the applicable sections of 40 CFR 265.192 and WAC 173-303-640(3). These results are based on a review of the applicable codes, standards, and documents.

A listing of the IQRPE, Professional Engineers, and other engineers is provided below.

Independent Qualified Registered Professional Engineer

Sohan S. Gahir

- P.E., Mechanical Engineering, License No. 18503

Professional Engineers

Alexander P. Butterfield

- P.E., Mechanical Engineering, License No. 52255

Andrew S. Klein

- P.E., Chemical, Fire Protection, License No. 47831

Michel J. Langevin

- P.E., Mechanical Engineering, License No. 23759

Paul M. Giever

- S.E., Structural Engineering, License No. 28084

BS Degreed Engineer

Nathaniel R. Weinman

- E.I.T., Mechanical Engineering, Enrollment Number E-11818

The certifications below are in accordance with the requirements of 40 CFR 270.11(d), *Signatories to Permit Applications and Reports,* and WAC 173-303-810(13)(a), *Certifications.*

Report Lead IQRPE:

40 CFR 270.11(d), *Signatories to Permit Applications and Reports*

I certify under penalty of law that this document and all attachments were prepared under my direction or supervision according to a system designed to assure that qualified personnel properly gather and evaluate the information submitted. Based on my inquiry of the person or persons who manage the system, or those persons directly responsible for gathering the information, the information submitted is, to the best of my knowledge and belief, true, accurate, and complete. I am aware that there are significant penalties for submitting false information, including the possibility of fine and imprisonment for knowing violations.

WAC 173-303-810(13)(a), *Certification*

I certify under penalty of the law that this document and all attachments were prepared under my direction or supervision in accordance with a system designed to assure that qualified personnel properly gather and evaluate the information submitted. Based on my inquiry of the person or persons who manage the system, or those persons directly responsible for gathering the information, the information submitted is, to the best of my knowledge and belief, true, accurate, and complete. I am aware that there are significant penalties for submitting false information, including the possibility of fine and imprisonment for knowing violations.

SOHAN S. GAHIR
STATE OF WASHINGTON
18503
REGISTERED
PROFESSIONAL ENGINEER

12/3/2020

Report Reviewed by:

Sohan S. Gahir, P.E.
Independent Qualified Registered Professional Engineer

December 3, 2020
Date

4.0 REFERENCES

40 CFR 265.192, *"Design and Installation of New Tank Systems or Components,"* Code of Federal Regulations, as amended.

40 CFR 265.192, Subpart J, *"Design and Installation of New Tank System Components,"* Code of Federal Regulations, as amended.

40 CFR 270.11(d), *"Signatories to Permit Applications and Reports,"* Code of Federal Regulations, as amended.

40 CFR Part 265, *"Interim Status Standards for Owners and Operators of Hazardous Waste Treatment, Storage, and Disposal Facilities,"* Code of Federal Regulations, as amended.

ASME B31.3, 2016, *Process Piping*, American Society of Mechanical Engineers, New York, New York.

ASTM A106/A106M-19, 2019, *Standard Specification for Seamless Carbon Steel Pipe for High-Temperature Service*, ASTM International, West Conshohocken, Pennsylvania.

ASTM A240/A240M-19, 2019, *Standard Specification for Chromium and Chromium-Nickel Stainless Steel Plate, Sheet, and Strip for Pressure Vessels and for General Applications*, ASTM International, West Conshohocken, Pennsylvania.

ASTM A312/A312M-19, 2019, *Standard Specification for Seamless, Welded, and Heavily Cold Worked Austenitic Stainless Steel Pipes*, ASTM International, West Conshohocken, Pennsylvania.

ASTM A403/A403M-19, 2019, *Standard Specification for Wrought Austenitic Stainless Steel Piping Fittings*, ASTM International, West Conshohocken, Pennsylvania.

ASTM A53/A53M-18, 2018, *Standard Specification for Pipe, Steel, Black and Hot-Dipped, Zinc-Coated, Welded and Seamless*, ASTM International, West Conshohocken, Pennsylvania.

ASTM A995/A995M-19, 2019, *Standard Specification for Castings, Austenitic-Ferritic (Duplex) Stainless Steel, for Pressure-Containing Parts*, ASTM International, West Conshohocken, Pennsylvania.

AWS D1.1/D1.1M, 2015, *Structural Welding Code - Steel*, American Welding Society, Miami, Florida.

AWS D1.6/D1.6M, 2017, *Structural Welding Code – Stainless Steel*, American Welding Society, Miami, Florida.

DA-327971-02, 2020, *242-A Evaporator Transfer Line Replacement Project, 242-A Pump Room Jumpers*, Rev. 1, Meier Architecture • Engineering, Kennewick, Washington.

DA-327971-03, 2020, *242-A Evaporator Transfer Line Replacement, Transfer Lines/AW Farm Jumpers and Wall Nozzles*, Rev. 0, Meier Architecture • Engineering, Kennewick, Washington.

ECN-715004, 2020, *Core Drill and Install Wall Nozzle 41, 42, and 43 Assemblies at 242-A Evaporator Pump Room*, Rev. 1, Washington River Protection Solutions LLC, Richland, Washington.

H-14-020802, 2017, Sheet 6, *Waste Transfer System (WT) O&M System P&ID*, Rev. 11, U.S. Department of Energy, Office of River Protection, Richland, Washington.

H-14-111832, 2020, Sheets 1-17, W*all Nozzle Assemblies 242-A Pump Room,* Rev. 1, U.S. Department of Energy, Office of River Protection, Richland, Washington.

H-14-111860, 2020, Sheets 1-26, *DST Replacement Transfer Lines Plan and Profile 241-AW to 242-A Evaporator,* Rev. 0, U.S. Department of Energy, Richland, Washington.

H-2-90185, 2018, Sheet 1, *Male Nozzle 2" PUREX,* Rev. 6, U.S. Department of Energy, Office of River Protection, Richland, Washington.

H-2-90186, 2018, Sheet 1, *Male Nozzle 3" PUREX,* Rev. 6, U.S. Department of Energy, Office of River Protection, Richland, Washington.

H-2-98995, 2018, Sheet 2, *P&ID Drain System,* Rev. 16, U.S. Department of Energy, Office of River Protection, Richland, Washington.

IA-3127971-01, 2020, *IQRPE Installation Assessment Report For 242-A Evaporator Transfer Line Replacement Project, Structural Modifications (Wall Nozzles),* Rev. 0, Meier Architecture • Engineering, Kennewick, Washington.

IP-327971-01, 2020, *IQRPE Inspection Plan for 242-A Evaporator Transfer Line Replacement Project, Structural Modifications (Wall Nozzles),* Rev. 0, Meier Architecture • Engineering, Kennewick, Washington.

MT-50400, 2020, *242-A Evaporator Waste Transfer Line Replacement*, Rev. 1, Washington River Protection Solutions, LLC, Richland, Washington

OSD-T-151-00007, 2020, *Operating Specifications for the Double-Shell Storage Tanks*, Rev. 27, Washington River Protection Solutions, LLC, Richland, Washington.

RPP-11596, 2011, *Nozzle, Remote Connector, Stainless Steel*, Rev. 3, Washington River Protection Solutions, LLC, Richland, Washington.

RPP-25153, 2007, *Volume 3: IQRPE DST System Integrity Assessment – Waste Compatibility,* Rev. 1, Washington River Protection Solutions, LLC, Richland, Washington.

RPP-27591, 2007, *Volume 2: IQRPE DST System Integrity Assessment – Pipeline Integrity,* Rev. 1, Washington River Protection Solutions, LLC, Richland, Washington.

RPP-CALC-63208, 2020, *Structural Analysis for the 242-A Pump Room Wall Nozzle Assemblies Plus Counterweight Lifting Devices,* Rev. 1, Washington River Protection Solutions, LLC, Richland, Washington.

RPP-CALC-63211, 2020, *ASME B31.3 Analyses of the New SL-170, SL-171, SL-172 and SN-275 Waste Transfer Lines in 241-AW Tank Farm,* Rev. 0, Washington River Protection Solutions, LLC, Richland, Washington.

RPP-CALC-63214, 2020. 242-A Evaporator Pump Room Jumpers Supporting Analyses, Rev 0, U.S. Department of Energy, Richland, Washington.

RPP-CALC-63227, 2020, *DST Replacement Waste Transfer Lines Freeze Protection Analyses 241-AW to 242-A Evaporator*, Rev. 0, U.S. Department of Energy, Richland, Washington.

RPP-RPT-58441, 2016, *Double-Shell Tank System Integrity Assessment Report (DSTAR)*, Rev. 1, Washington River Protection Solutions, LLC, Richland, Washington.

RPP-RPT-58773, 2018, *Assessment of Safety Significant Piping Jumpers to Assure Excess Load Capacity for Potential Water Hammer (Leak Check and Flush) Events*, Rev. 2, Washington River Protection Solutions LLC, Richland, Washington.

RPP-RPT-60098, 2018, *242-A Evaporator System Integrity Assessment Report*, Rev. 0, Washington River Protection Solutions, LLC, Richland, Washington.

Statement of Work (SOW) No. 327971, 2019, *242-A Evaporator Transfer Line Replacement IQRPE (BMA# 64658)*, Rev. 0, Washington River Protection Solutions, LLC, Richland, Washington.

WAC 173-303, *"Dangerous Waste Regulations,"* Washington Administrative Code, as amended.

WAC 173-303-040, *"Definitions"*, Washington Administrative Code, as amended.

WAC 173-303-640(3), *"Design and Installation of New Tank Systems or Components,"* Washington Administrative Code, as amended.

WAC 173-303-640, *"Tank Systems,"* Washington Administrative Code, as amended.

WAC 173-303-810(13)(a), *"Certification,"* Washington Administrative Code, as amended. Washington River Protection Solutions, LLC, Richland, Washington.

DOCUMENT RELEASE AND CHANGE FORM

Prepared For the U.S. Department of Energy, Assistant Secretary for Environmental Management
By Washington River Protection Solutions, LLC., PO Box 850, Richland, WA 99352
Contractor For U.S. Department of Energy, Office of River Protection, under Contract DE-AC27-08RV14800

TRADEMARK DISCLAIMER: Reference herein to any specific commercial product, process, or service by trade name, trademark, manufacturer, or otherwise, does not necessarily constitute or imply its endorsement, recommendation, or favoring by the United States government or any agency thereof or its contractors or subcontractors. Printed in the United States of America.

Release Stamp

DATE:
Dec 09,2020
HANFORD RELEASE

1. **Doc No:** RPP-IQRPE-50067 **Rev.** 00

2. **Title:**
Independent Qualified Registered Professional Engineer Design Assessment for 242-A Evaporator Transfer Line Replacement Project, 242-A Pump Room Jumpers

3. **Project Number:** ☐N/A
T1P207

4. **Design Verification Required:**
☐Yes ☒No

5. **USQ Number:** ☐ N/A
EV-20-1561-D, Rev. 0

6. **PrHA Number** **Rev.** ☒ N/A

Clearance Review Restriction Type: public

7. **Approvals**

Title	Name	Signature	Date
Clearance Review	Ayers, Lynn M	*Ayers, Lynn M*	12/09/2020
Design Authority	Engeman, Jason K	*Engeman, Jason K*	12/08/2020
Checker	Labelle, Steven A	*Labelle, Steven A*	12/08/2020
Document Control Approval	Meinecke, Kathryn R	*Meinecke, Kathryn R*	12/09/2020
Environmental Protection	Wall, Jeremy M	*Wall, Jeremy M*	12/08/2020
Originator	Barnes, Travis J	*Barnes, Travis J*	12/08/2020
Responsible Manager	Smith, Gregory E	*Smith, Gregory E*	12/09/2020
USQ Evaluator	Wheeler, Ronnie	*Wheeler, Ronnie*	12/08/2020

8. **Description of Change and Justification**

Initial Release

9. **TBDs or Holds** ☒N/A

10. **Related Structures, Systems, and Components**

a. **Related Building/Facilities** ☐N/A	b. **Related Systems** ☐N/A	c. **Related Equipment ID Nos. (EIN)** ☐N/A
242-A	241-WT 242A	242A-WT-J-[41 TO 5] 242A-WT-J-[43 TO 13A]

11. **Impacted Documents – Engineering** ☒N/A

Document Number	Rev.	Title

12. **Impacted Documents (Outside SPF):**

N/A

13. **Related Documents** ☐N/A

Document Number	Rev.	Title
RPP-IQRPE-50066	01	Independent Qualified Registered Professional Engineer Design Assessment for 242-A Evaporator Transfer Line Replacement Project, 242-A Pump Room Structural Modifications (Wall Nozzles)

14. **Distribution**

Name	Organization
Barnes, Travis J	TANK FARM PROJECTS ENGINEERING
Engeman, Jason K	TANK FARM PROJECTS ENGINEERING
Huntington, Nikki L	CSE & RELIABILITY ENGINEERING

RECEIVED
Dec 9, 2020
Department of Ecology
NWP - Richland

RPP-IQRPE-50067
Revision 0

INDEPENDENT QUALIFIED REGISTERED PROFESSIONAL ENGINEER DESIGN ASSESSMENT REPORT FOR 242-A EVAPORATOR TRANSFER LINE REPLACEMENT PROJECT, 242-A PUMP ROOM JUMPERS

Prepared by

Meier Architecture and Engineering for
Washington River Protection Solutions, LLC

Date Published
December 2020

Prepared for the U.S. Department of Energy
Office of River Protection

Contract No. DE-AC27-08RV14800

Approved for Public Release;
Further Dissemination Unlimited

Independent Qualified Registered Professional Engineer Design Assessment Report for

242-A Evaporator Transfer Line Replacement Project, 242-A Pump Room Jumpers

IQRPE Design Assessment Report No. DA-327971-02 Rev. 1

Prepared by

Meier Architecture • Engineering
12 W. Kennewick Ave.
Kennewick, WA 99336

At the request of

Washington River Protection Solutions, LLC
Richland, Washington 99352

Meier Project No. 19-8530
WRPS Subcontract No. 64658, Release 026

December 3, 2020

TABLE OF CONTENTS

TABLE OF CONTENTS 2

1.0 INTRODUCTION 4
1.1 PROJECT DESCRIPTION 5
1.1.1 Background 5
1.1.2 IQRPE Scope 5
1.2 DESIGN REVIEW REQUIREMENTS 20
1.3 DESIGN OVERVIEW FOR 242-A EVAPORATOR TRANSFER LINE REPLACEMENT PROJECT, 242-A PUMP ROOM JUMPERS 20
1.3.1 242-A Evaporator Pump Room Jumpers 20
1.3.1.1 Jumper Assembly, 242A-WT-J-[41 to 5] 21
1.3.1.2 Jumper Assembly, 242A-WT-J-[43 to 13A] 21
1.4 SCOPE OF IQRPE DESIGN ASSESSMENT 21
1.4.1 Portions of the 242-A Evaporator Transfer Line Replacement Project, 242-A Pump Room Jumpers Included in Scope for IQRPE Certification 21
1.4.2 Portions of the 242-A Evaporator Transfer Line Replacement Project, 242-A Pump Room Jumpers Not Included in Scope for IQRPE Certification 21

2.0 ASSESSMENT SUMMARY 22
2.1 CODES, STANDARDS, AND REGULATIONS 22
2.2 BASIS OF DESIGN 22
2.2.1 Structural Design Standards 22
2.2.2 242-A Evaporator Transfer Line Replacement Project, 242-A Pump Room Jumpers Structural Evaluation 24
2.2.2.1 Jumper Assembly 242A-WT-J-[41 to 5] 24
2.2.2.2 Jumper Assembly 242A-WT-J-[43 to 13A] 24
2.2.2.3 Structural Design Exceptions 24
2.2.2.4 Structural Design Assessment Conclusion 24
2.2.3 Waste Compatibility 24
2.2.3.1 Anticipated Chemistry and Controls 25
2.2.3.2 Waste Compatibility Exceptions 26
2.2.3.3 Waste Compatibility Assessment Conclusion 26
2.2.4 Pressure Control System 26
2.2.4.1 Jumper Assemblies 242A-WT-J-[41 to 5] and 242A-WT-J-[43 to 13A] 26
2.2.4.2 Pressure Control System Exceptions 27
2.2.4.3 Pressure Control System Conclusion 27
2.2.5 Secondary Containment System 27
2.2.5.1 Secondary Containment System Exceptions 28
There are no exceptions to the IQRPE certification of the secondary containment review assessment. 28
2.2.5.2 Secondary Containment System Conclusion 28
2.2.6 Ancillary Equipment Design 28
2.2.6.1 Ancillary Equipment Design Exceptions 28

2.2.6.2 Ancillary Equipment Design Conclusion....29
2.2.7 P&ID Review....29
2.2.8 Corrosion Assessment....29
2.2.8.1 Corrosion Assessment Exceptions....29
2.2.8.2 Corrosion Assessment Conclusion....29
2.2.9 Recommended Inspection Schedule for Future Integrity Assessment....29

3.0 DESIGN REVIEW ASSESSMENT CERTIFICATIONS....31

4.0 REFERENCES....33

Tables

Table 1: Transfer Line/Wall Nozzle/Jumper Connections....5

Table 2: 242-A Evaporator Transfer Line Replacement Project, 242-A Pump Room Jumpers Operating Characteristics....22

Table 3: 242-A Evaporator Transfer Line Replacement Project, 242-A Pump Room Jumpers Materials of Construction....25

Figures

Figure 1: Overall Scope of 242-A Evaporator Transfer Line Replacement Project....7

Figure 2: Overall Plan View of 242-A Evaporator Transfer Line Replacement Project....8

Figure 3: Facilities in the Hanford Site 200 East Area....9

Figure 4: Aerial Photograph Showing an Overview of the 242-A Evaporator Facility in the 200 East Area....10

Figure 5: Photograph of the Outside of the 242-A Evaporator Facility in the 200 East Area....11

Figure 6: Aerial View of the 242-A Evaporator Facility in the 200 East Area....12

Figure 7: 242-A Evaporator Pump Room Jumper Arrangement (ECN-715005, Page 11)....13

Figure 8: 242-A Pump Room Jumper “41-5” Isometric View (H-14-111834, Sheet 1)....14

Figure 9: 242-A Pump Room Jumper “41-5” Weldment Plan View (H-14-111834, Sheet 2)....15

Figure 10: 242-A Pump Room Jumper “41-5” Weldment Side View (H-14-111834, Sheet 2)....16

Figure 11: 242-A Pump Room Jumper “43-13A” Isometric View (H-14-111835, Sheet 1)....17

Figure 12: 242-A Pump Room Jumper “43-13A” Weldment Plan View (H-14-111835, Sheet 2)....18

Figure 13: 242-A Pump Room Jumper “43-13A” Weldment Side Views (H-14-111835, Sheet 2)....19

1.0 INTRODUCTION

Code of Federal Regulations (CFR) 40 CFR 265.192, *Design and Installation of New Tank Systems or Components*, and Washington Administrative Code (WAC) 173-303-640(3), *Design and Installation of New Tank Systems or Components*, provide a set of requirements for Owner/Operators of dangerous waste tank systems. This Design Assessment Report is prepared for Washington River Protection Solutions, LLC (WRPS), to meet the Washington Department of Ecology (Ecology) review, by an Independent Qualified Registered Professional Engineer (IQRPE) to certify that the proposed tank system will have sufficient structural integrity and is acceptable for storing and treating dangerous waste per 40 CFR 265.192(a) and WAC 173-303-640(3)(a).

WRPS Statement of Work (SOW) No. 327971, *242-A Evaporator Transfer Line Replacement IQRPE (BMA# 64658)*, was issued to cover the overall work scope associated with the 242-A Evaporator transfer line replacement. Due to both the nature and schedule of the work scope, the IQRPE design assessment process will be covered under three (3) different documents.

- DA-327971-01, *Design Assessment Report for 242-A Evaporator Transfer Line Replacement Project, 242-A Pump Room Structural Modifications (Wall Nozzles)*, covers the three (3) nozzles installed in the west wall of the 242-A Evaporator Building.
- DA-327971-02, *Design Assessment Report for 242-A Evaporator Transfer Line Replacement Project, 242-A Pump Room Jumpers*, will cover the jumpers installed inside the 242-A Evaporator Building that are connected to the wall nozzles.
- DA-327971-03, *Design Assessment Report for 242-A Evaporator Transfer Line Replacement Project, Transfer Lines/AW Farm Jumpers/Structural Modifications (AW Farm Wall Nozzles)*, will cover the transfer lines, jumpers, and wall nozzles installed in three (3) different pits of the 241-AW Tank Farm. These pits include 241-AW-02A, AW-B, and AW-02E.

The design assessment scope covered under this document includes only DA-327971-02. The corresponding Inspection Plan for this scope is detailed in IP-327971-02, *IQRPE Inspection Plan for 242-A Evaporator Transfer Line Replacement Project, 242-A Pump Room Jumpers*. The Inspection Plan identifies the IQRPE inspections required for the procurement, fabrication, testing, and installation for the 242-A Evaporator Transfer Line Replacement Project, 242-A Pump Room Jumpers.

IA-327971-02, *IQRPE Installation Assessment Report For 242-A Evaporator Transfer Line Replacement Project, 242-A Pump Room Jumpers* will also be prepared for WRPS, to meet Ecology review by an IQRPE to certify that the tank system installations are in accordance with 40 CFR 265.192(b)-(f) and WAC 173-303-640(3)(c)-(g).

The IQRPE maintains “independence” at all times. However, comments by others are considered by the IQRPE during the preparation of reports and plans. Only the IQRPE can implement changes to the master IQRPE documents.

1.1 PROJECT DESCRIPTION

1.1.1 Background

The overall scope of the 242-A Evaporator Transfer Line Replacement Project will execute the design, construction, and installation of the replacement feed/slurry transfer lines, intra-farm transfer line, 242-A structural interface modifications, double-shell tank (DST) structural pit modifications, and waste transfer jumpers in support of the 242-A Evaporator mission. Recent pneumatic testing on the encasement of the SL-167 transfer line determined that it could not maintain pressure. Therefore, the transfer line cannot meet Resource Conservation and Recovery Act (RCRA) compliance and requires replacement.

The SL-167 transfer line originates at a wall nozzle within the 242-A Evaporator Pump Room and is the connection point with jumper 19-5. This connection allows slurry transfer to tank farms via the P-B-2 waste transfer pump in the 242-A Evaporator. Currently, SL-167 connects 242-A to the AW-B valve pit. The existing jumper arrangement within the AW-B valve pit allows for routing of slurry waste to various AW Farm tanks. AW-B also utilizes an additional connection with SL-509 to provide routing options to AP Farm through the AP valve pit.

The primary purpose of SL-167 is to support 242-A Evaporator campaigns; specifically, to create DST space through waste reduction. This directly supports the River Protection Project mission to retrieve and treat highly radioactive waste stored in Hanford Site tanks in an environmentally safe, sound, and cost-effective manner.

Existing feed lines SN-269 and SN-270 connect AW-02E to their respective wall nozzles within the 242-A Evaporator Pump Room. SN-269 is the current in-service feed line and is connected to the process system via jumper 13-13A (H-2-98988, Sheet 2, *P&ID EVAP RECIC System*). SN-270 is the current spare feed line.

Two (2) new jumpers will connect with the new wall nozzles installed in the west wall of the 242-A Evaporator Building. These will provide connections with new transfer lines SL-170 and SN-275. The jumper associated with its respective transfer line and wall nozzle is listed in Table 1.

Table 1: Transfer Line/Wall Nozzle/Jumper Connections

Transfer Line Equipment Identification Number	242-A Wall Nozzle	242-A Jumper
AW02A-WT-WTL-SL-170	242-A, Nozzle 41	Jumper Assembly 41 to 5
AW02A-WT-WTL-SL-171	242-A, Nozzle 42	N/A
AW02E-WT-WTL-SN-275	242-A, Nozzle 43	Jumper Assembly 43 to 13A

1.1.2 IQRPE Scope

Meier Architecture • Engineering (Meier) provided an IQRPE to perform the design assessment per contract with WRPS SOW No. 327971. The scope includes review of the design, procurement,

fabrication, testing, and installation activities for the IQRPE Support to 242-A Evaporator Transfer Line Replacement Project, 242-A Pump Room Jumpers.

A review of design documents (drawings, calculations, material specifications, etc.) was completed by the IQRPE. Fabrication and installation inspections will be completed by the IQRPE. Included within the scope of the IQRPE review are various technical evaluations covering areas dealing with potential waste leak paths, thermal expansion, water hammer, and freeze protection issues associated with the components of the IQRPE Support to 242-A Evaporator Transfer Line Replacement Project, 242-A Pump Room Jumpers.

The IQRPE performed the design assessment to the requirements of 40 CFR 265.192 and WAC 173-303-640(3) for each of the new jumpers listed above.

This IQRPE design assessment takes credit for the following previously issued IQRPE Design Assessment and Installation Assessment Reports that cover the previously installed components of the Waste Transfer System (WTS).

- RPP-RPT-60098, *242-A Evaporator System Integrity Assessment Report.* This IQRPE report was the independent assessment of the waste-handling system integrity of the 242-A Evaporator facility in accordance with WAC 173-303-640, *Tank Systems*.
- RPP-25153, *Volume 3: IQRPE DST System Integrity Assessment - Waste Compatibility*. This report reviews the past, current, and projected future contents of the Hanford DSTs, materials of construction of the DSTs and ancillary equipment, and possible mechanisms of corrosion to reach conclusions and recommendations about waste compatibility with the existing equipment.
- RPP-27591, *Volume 2: IQRPE DST System Integrity Assessment - Pipeline Integrity*. This report assesses design standards, hazardous waste compatibility, existing corrosion protection measures, past pipeline integrity assessments, and results of leak test, internal inspection and examinations necessary to support the overall DST System Integrity Assessment.
- RPP-RPT-58441, *Double-Shell Tank System Integrity Assessment Report (DSTAR)*. This report assesses the overall integrity for the waste storage tanks, pits, vaults, and buried piping using the DST system configuration as of 2016.

The following figures show the general layout of the project location, infrastructure, equipment layout, and other pertinent details:

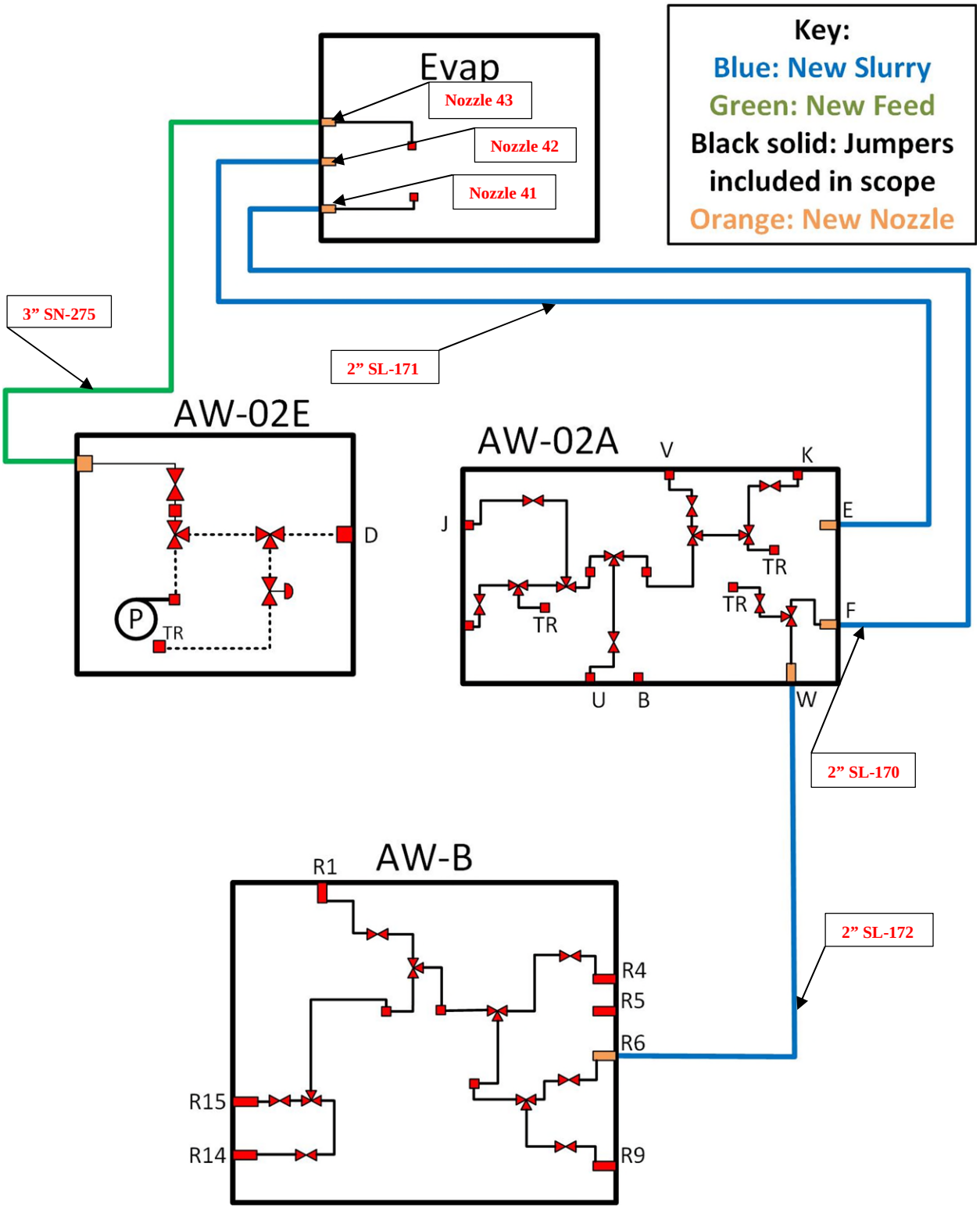

Figure 1: Overall Scope of 242-A Evaporator Transfer Line Replacement Project

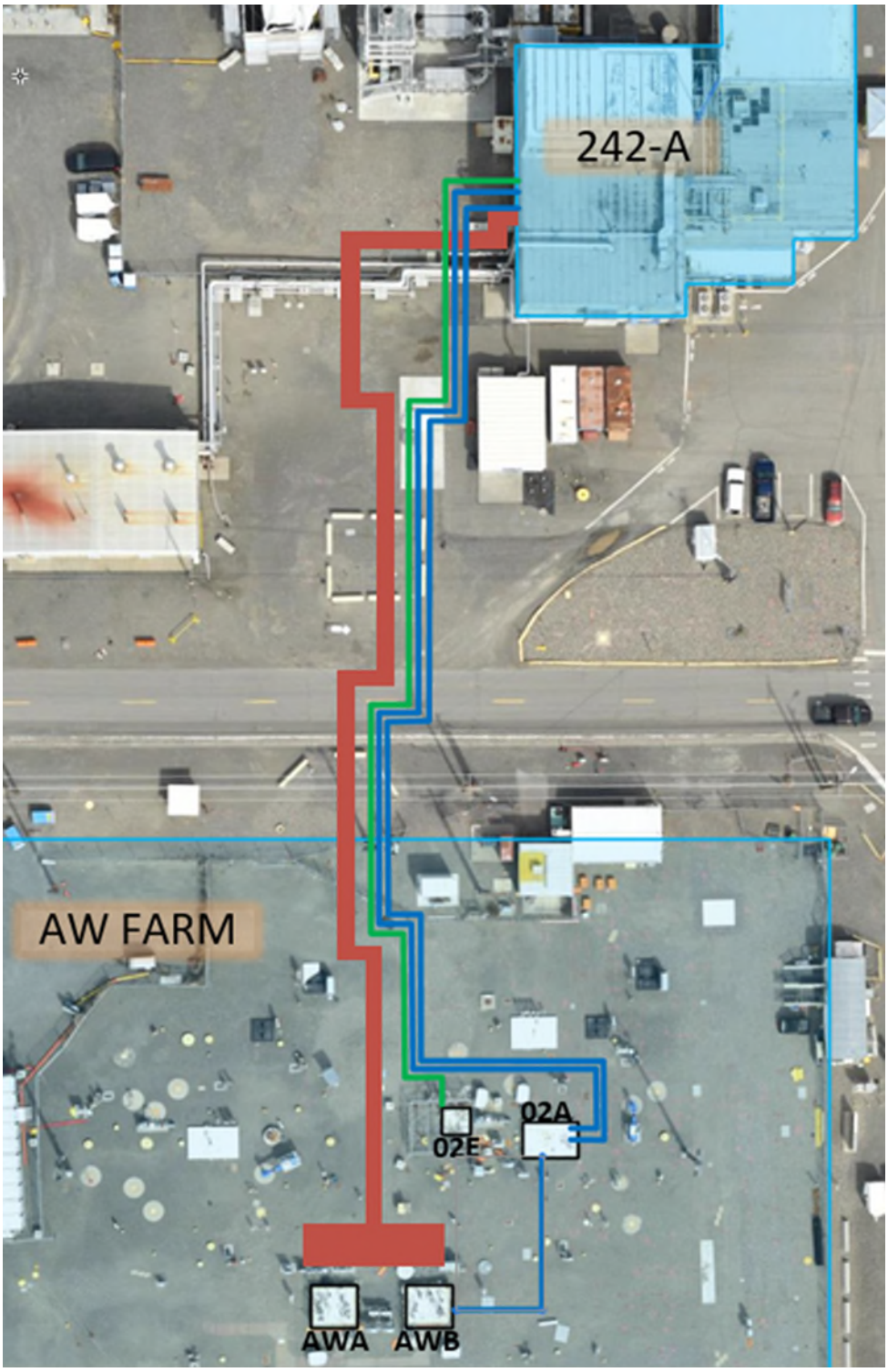

Figure 2: Overall Plan View of 242-A Evaporator Transfer Line Replacement Project

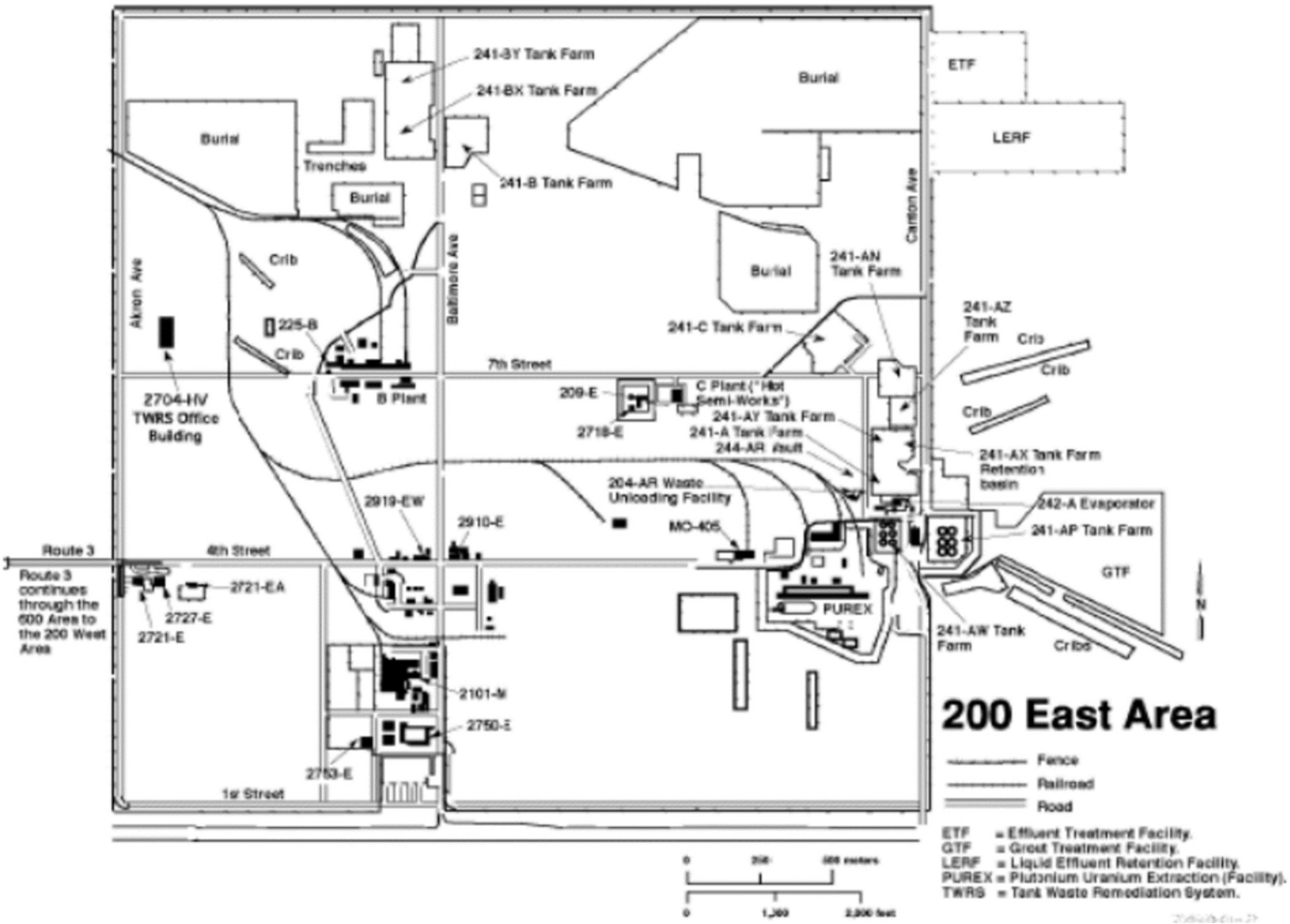

Figure 3: Facilities in the Hanford Site 200 East Area

Figure 4: Aerial Photograph Showing an Overview of the 242-A Evaporator Facility in the 200 East Area

Figure 5: Photograph of the Outside of the 242-A Evaporator Facility in the 200 East Area

Figure 6: Aerial View of the 242-A Evaporator Facility in the 200 East Area

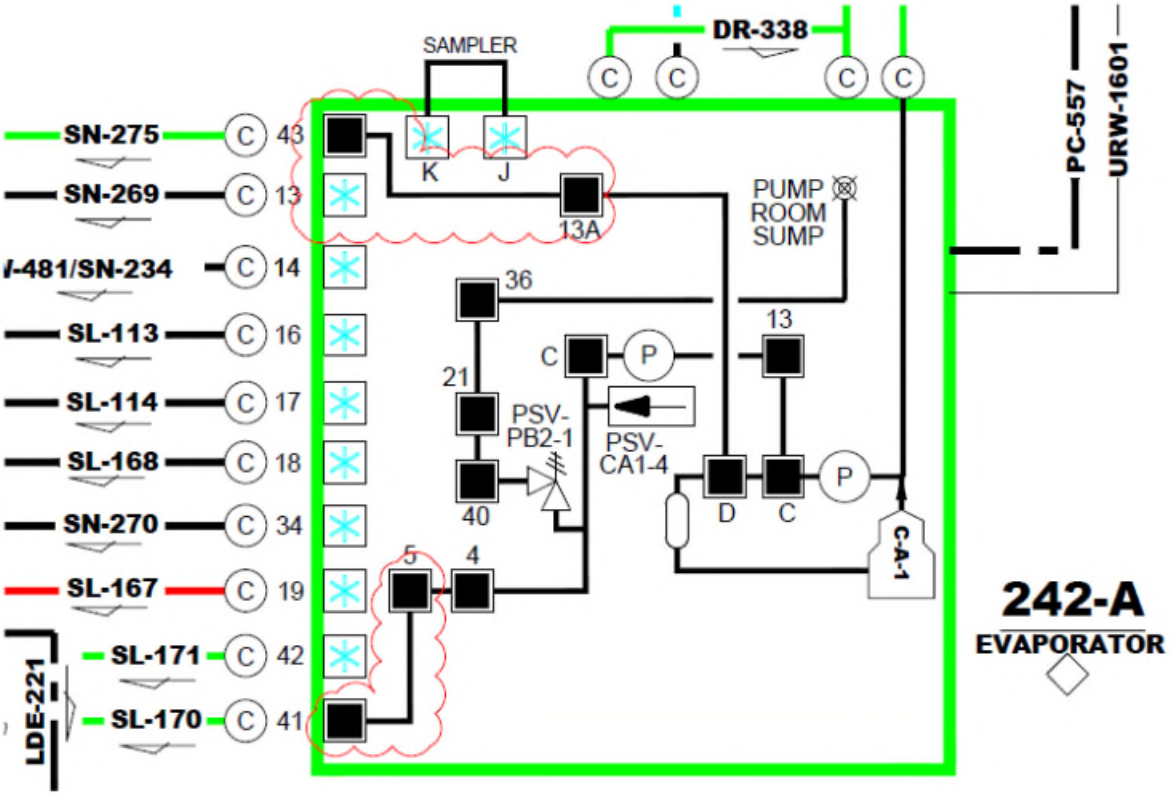

Figure 7: 242-A Evaporator Pump Room Jumper Arrangement (ECN-715005, Page 11)

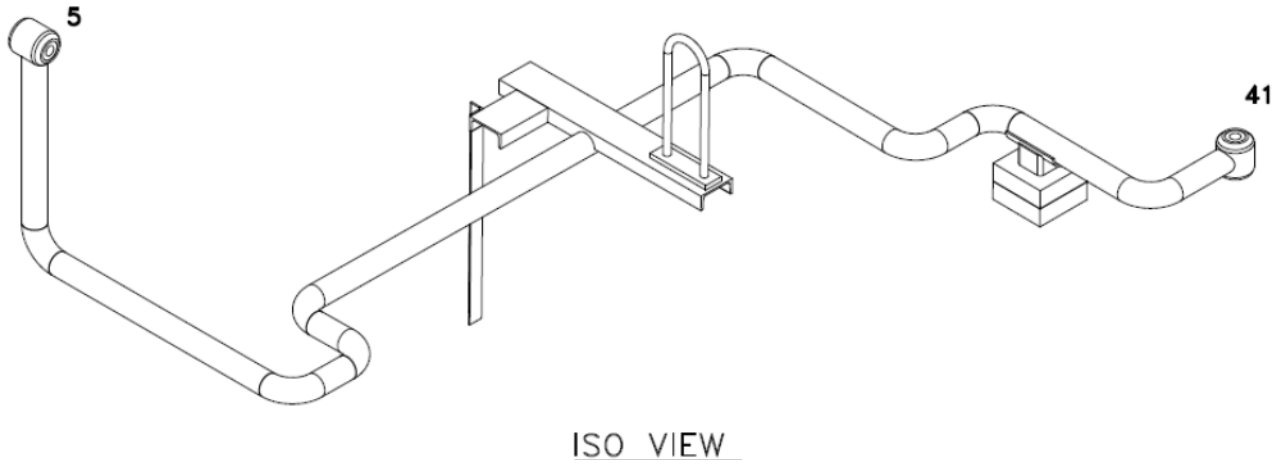

Figure 8: 242-A Pump Room Jumper "41-5" Isometric View (H-14-111834, Sheet 1)

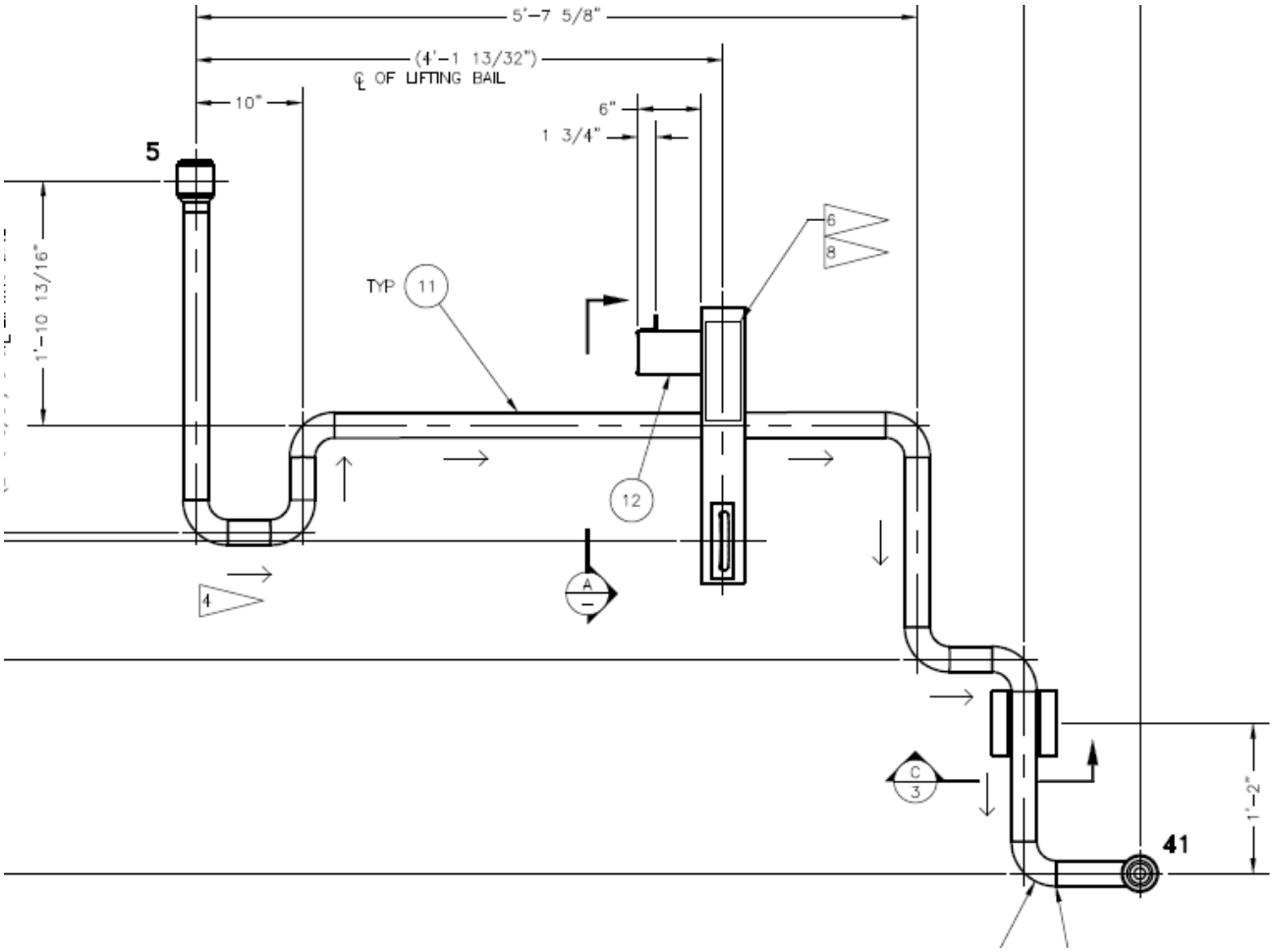

Figure 9: 242-A Pump Room Jumper "41-5" Weldment Plan View (H-14-111834, Sheet 2)

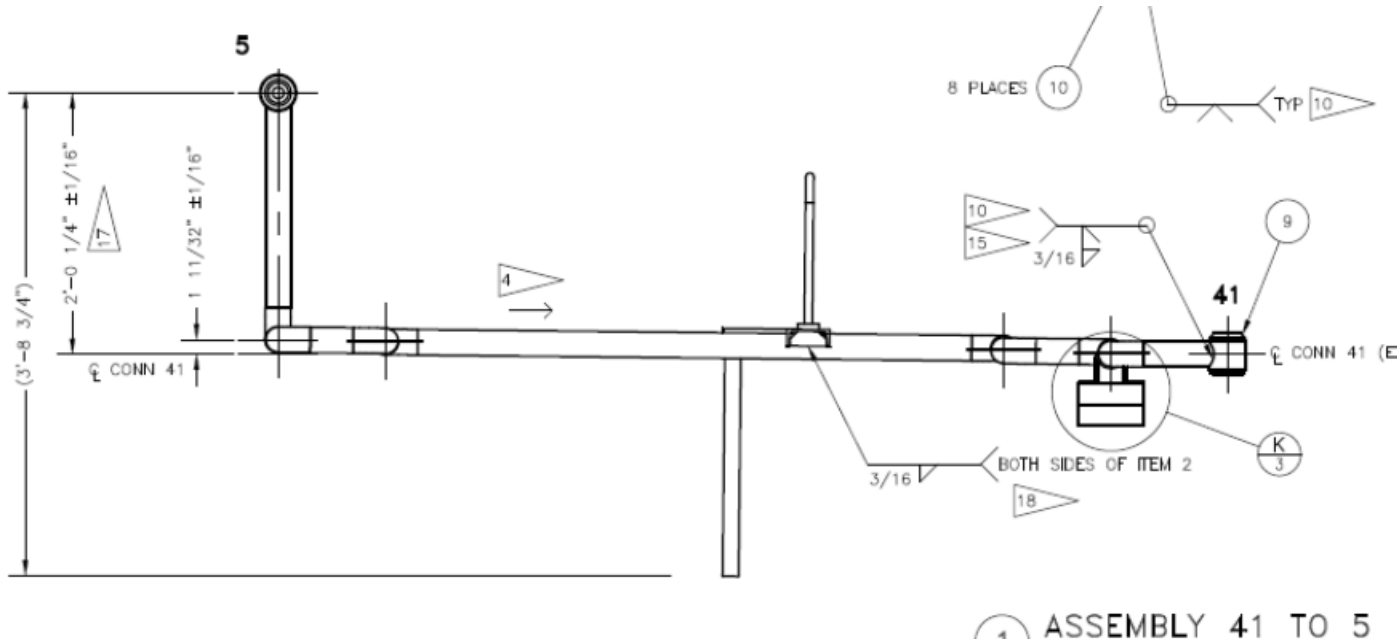

Figure 10: 242-A Pump Room Jumper "41-5" Weldment Side View (H-14-111834, Sheet 2)

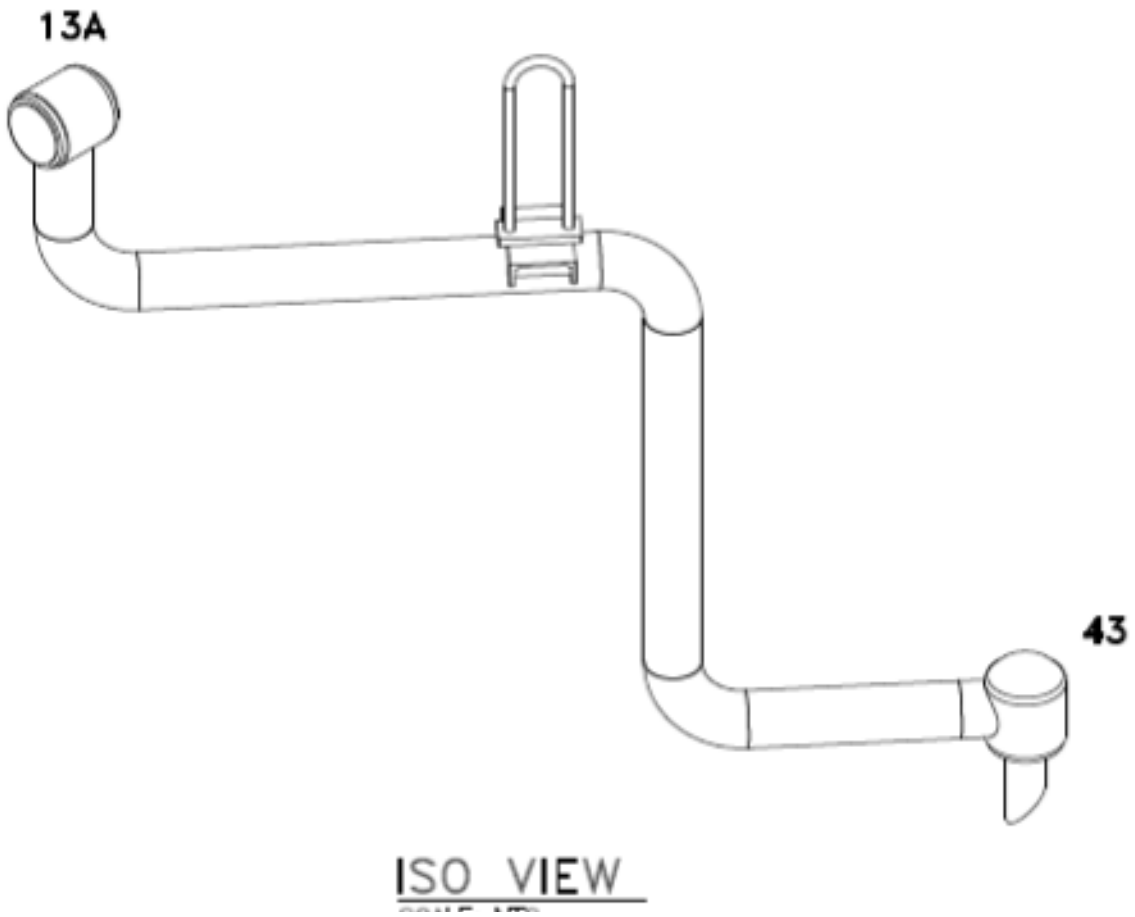

Figure 11: 242-A Pump Room Jumper "43-13A" Isometric View (H-14-111835, Sheet 1)

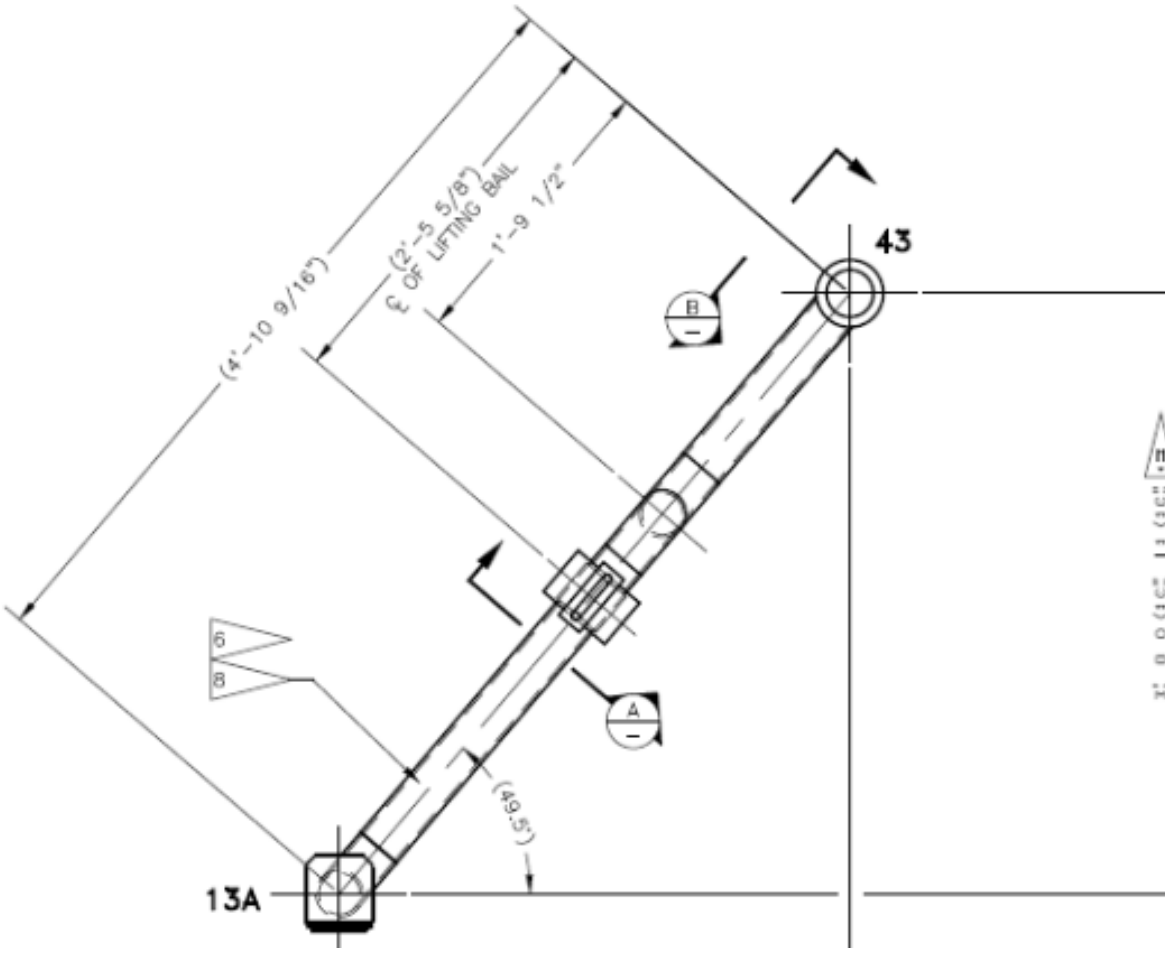

Figure 12: 242-A Pump Room Jumper "43-13A" Weldment Plan View (H-14-111835, Sheet 2)

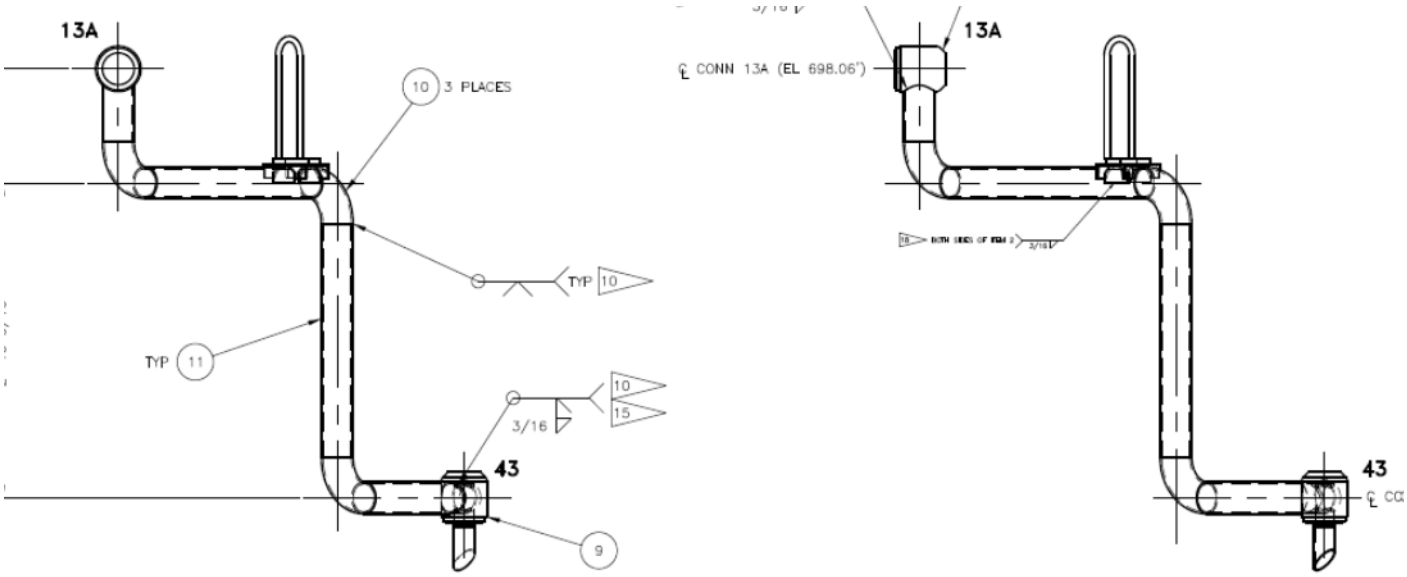

Figure 13: 242-A Pump Room Jumper "43-13A" Weldment Side Views (H-14-111835, Sheet 2)

1.2 DESIGN REVIEW REQUIREMENTS

Many of the components required for the transfer of dangerous or mixed waste are regulated by 40 CFR 265.192 and WAC 173-303-640(3) requirements. The CFR and WAC codes require an IQRPE review of the design of these components prior to installation.

As a basis for the IQRPE certification, a review is performed on a final version of the document design package as prepared and reviewed by WRPS. Documents such as drawings, calculations, Engineering Change Notices (ECNs), Engineering Design Transmittals (EDTs), and Technical Evaluations included in the design review package that are marked as final, and have signatures of the preparer, checker, and approver, are reviewed by the IQRPE as a completed document. All other documents will be reviewed as preliminary or supportive information.

The IQRPE maintains "independence" at all times. However, comments by others are considered by the IQRPE during the preparation of reports and plans. Only the IQRPE can implement changes to the master IQRPE documents.

1.3 DESIGN OVERVIEW FOR 242-A EVAPORATOR TRANSFER LINE REPLACEMENT PROJECT, 242-A PUMP ROOM JUMPERS

This Design Assessment Report is prepared for WRPS by an IQRPE to certify that the proposed tank system will have sufficient structural integrity and is acceptable for storing and treating dangerous waste per 40 CFR 265.192(a) and WAC 173-303-640(3)(a).

The specific components included as part of the IQRPE design assessment for the IQRPE Support to 242-A Evaporator Transfer Line Replacement Project, 242-A Pump Room Jumpers are listed below:

- <u>242-A Evaporator Transfer Line Replacement Project</u>
  - 242-A Evaporator Pump Room Jumpers
    - New Jumper Assembly: 242A-WT-J-[41 to 5]
    - New Jumper Assembly: 242A-WT-J-[43 to 13A]

The following sections list and briefly describe the components of the 242-A Evaporator Transfer Line Replacement Project, 242-A Pump Room Jumpers included in this design review.

1.3.1 242-A Evaporator Pump Room Jumpers

Waste transfer jumpers are utilized within the Pump Room of the 242-A Evaporator Building to route liquid waste streams to various locations and systems. The jumpers serve as the pressure boundary for the system and are required to meet ASME B31.3, *Process Piping*, requirements. All jumper designs and installations are identified as Task 3 in WRPS SOW No. 327971.

The scope of this particular design assessment is for two (2) new jumpers to be designed, procured, fabricated, and installed in the 242-A Pump Room in support of the overall scope of the 242-A Evaporator Transfer Line Replacement Project. The structural modifications (wall nozzles), transfer lines, and the jumpers in the pits of AW Farm (AW-02A, AW-B and AW-02E) are assessed separately in their respective Design Assessment Reports listed in Section 1.0.

1.3.1.1 Jumper Assembly, 242A-WT-J-[41 to 5]

Jumper Assembly 242A-WT-J-[41 to 5] (H-14-111834, *Jumper Assembly 41-5, 242-A Pump Room*; H-2-98989, Sheet 1, *P&ID Slurry System* and ECN-715005) is used to transfer slurry waste from 242-A Pump Room to AW-02A via 2" AW02A-WT-WTL-SL-170 transfer line. One (1) side (2" horizontal connector assembly) of the jumper assembly is connected to an existing intermediate nozzle 5 which is connected to slurry pump P-B-2 in the 242-A Pump Room and other end (2" vertical connector assembly) is connected to 242-A Pump Room wall nozzle 41.

1.3.1.2 Jumper Assembly, 242A-WT-J-[43 to 13A]

Jumper assembly 242A-WT-J-[43 to 13A] (H-14-111835, *Jumper Assembly 43-13A, 242-A Pump Room*; H-2-98988 Sheet 2 and ECN-715005) is used to receive supernatant waste from feed pump pit AW-02E via 3" AW02E-WT-WTL-SN-275 transfer line to 242-A Pump Room wall nozzle 43. One (1) side (3" horizontal connector assembly) of the jumper assembly is connected to an existing nozzle 13A which is connected to Reboiler E-A-1 in the 242-A Pump Room and other end of the jumper (3" vertical connector assembly) is connected to 242-A Pump Room wall nozzle 43.

1.4 SCOPE OF IQRPE DESIGN ASSESSMENT

This IQRPE design assessment includes a comprehensive review of the IQRPE support to the 242-A Evaporator Transfer Line Replacement Project, 242-A Pump Room Jumpers design package per 40 CFR 265.192 and WAC 173-303-640(3).

1.4.1 Portions of the 242-A Evaporator Transfer Line Replacement Project, 242-A Pump Room Jumpers Included in Scope for IQRPE Certification

Documents included in this design review for the IQRPE Support to 242-A Evaporator Transfer Line Replacement Project, 242-A Pump Room Jumpers Project include:

- Calculations,
- Design and Fabrication Drawings,
- ECNs,
- Piping and Instrumentation Drawings (P&IDs).

A list of documents referenced by the IQRPE as part of this Design Assessment Report is included in Section 4.0

1.4.2 Portions of the 242-A Evaporator Transfer Line Replacement Project, 242-A Pump Room Jumpers Not Included in Scope for IQRPE Certification

This IQRPE review was limited only to IQRPE Support to 242-A Evaporator Transfer Line Replacement Project, 242-A Pump Room Jumpers Project components, and no other systems or components were evaluated.

2.0 ASSESSMENT SUMMARY

As described below in Section 2.2, systems within the IQRPE scope of this assessment are adequately designed to prevent failure caused by corrosion or by structural loads imposed by the system's intended service. The system design complies with the applicable requirements of 40 CFR 265.192 and WAC 173-303-640(3) design documents that were reviewed as part of this assessment are referenced in Section 4.0.

2.1 CODES, STANDARDS, AND REGULATIONS

The codes, standards, and regulations specifically used during the preparation of this certification are referenced, as necessary, throughout this report. A complete list of applicable references is contained in Section 4.0.

2.2 BASIS OF DESIGN

The primary operating characteristics of the IQRPE Support to 242-A Evaporator Transfer Line Replacement Project, 242-A Pump Jumpers Project are presented in Table 1.

Table 2: 242-A Evaporator Transfer Line Replacement Project, 242-A Pump Room Jumpers Operating Characteristics

Equipment	Operating Characteristic
242A-WT-J-[41 to 5]	Connects slurry pump P-B-2 discharge line intermediate nozzle 5 to 242-A wall nozzle 41 for slurry return to the AW-02A pump pit via the newly installed 2-inch AW02A-WT-WTL-SL-170 transfer line.
242A-WT-J-[43 to 13A]	Connects reboiler E-A-1 supernatant receiving line intermediate nozzle 13A to 242-A wall nozzle 43 to allow receipt of supernatant from the AW-02E feed pump pit via the newly installed 3-inch AW02E-WT-WTL-SN-275 transfer line.

2.2.1 Structural Design Standards

40 CFR 265.192 and WAC 173-303-640(3) require that an IQRPE certify that the proposed tank system will have sufficient structural integrity and is acceptable for storing and treating dangerous waste. This assessment must show, in accordance with 40 CFR 265.192(a) and WAC 173-303-640(3)(a), that the foundation, structural support, seams, connections, and pressure controls are adequately designed and that the tank system has sufficient structural strength, compatibility with the waste to be stored and treated, and corrosion protection to ensure that it will not collapse, rupture, or fail.

The 242-A Evaporator Transfer Line Replacement Project, 242-A Pump Room Jumpers equipment and structures are analyzed and designed in accordance with RPP-CALC-63213, *ASME*

B31.3 Analyses of the 41 to 5 and 43 to 13A Jumpers for the 242-A Evaporator Pump Room, and RPP-CALC-63214, *242-A Evaporator Pump Room Jumpers Supporting Analyses*.

Mechanical calculations performed for the jumpers are prepared in accordance with piping code requirements in ASME B31.3.

Calculations include the following areas as applicable:

- Pipe wall thickness calculations for pressure.
- Stress calculations for sustained loads due to pressure, dead load, and other sources.
- Stress calculations for displacements such as those associated with thermal loads.
- Stress calculations for occasional loads such as pressure, weight, and earthquake loads.
- Stress calculations for transients such as water hammer.

Both Ecology Publication 94-114, *Guidance for Assessing and Certifying Tank Systems that Store and Treat Dangerous Waste*, and WAC 173-303-640(3) define backfill requirements to provide structural support to prevent excessive settlement and corrosion. The corrosion assessment is addressed in Section 2.2.8 of this report.

Where possible, the IQRPE has reviewed the design package to ensure that the following activities have been incorporated into the technical documents:

- Calculations of thickness account for the assumed corrosion rate.
- Seismic considerations appropriate for the risk zone are included in the structural calculations.
- Foundations are deep enough in the ground to eliminate frost heave per the requirements of 40 CFR 265.192(a)(5)(iii) and WAC 173-303-640(3)(a)(v)(C). New equipment is either attached to existing tank structures or designed to accommodate frost heave.
- Adequate freeze protection is provided.

The 242-A Evaporator Transfer Line Replacement Project, 242-A Pump Room Jumpers Project installs jumpers inside the temperature-controlled 242-A Pump Room Building. This location eliminates any concerns dealing with structural issues related to freeze protection of piping, frost heaving of foundations, and back fill requirements to provide structural support to prevent excessive settlement and corrosion. The jumpers will not be in contact with the earth and their location inside of a building did not require wind, snow, or ash fall loads to be considered.

The overall positioning of the jumper nozzle locations, relative to the 242-A Evaporator Pump Room, was established from a review of facility drawings (RPP-CALC-63214).

RPP-CALC-63213 concluded the jumper assembly meets ASME B31.3 requirements. It included an evaluation of the highest loadings on the PUREX connectors per RPP-8359, *Analysis of 3-Inch by 3-Inch PUREX Type Jumper Connector*; RPP-RPT-29063, *Qualification of 3-in. PUREX Connector to ASME B31.3*, and RPP-RPT-36800, *Qualification of 2-in. PUREX Connector to ASME B31.3*. RPP-CALC-63213 determined that the highest loadings on the PUREX connections occurs from sustained and seismically induced stresses. The maximum loading at a PUREX connection is 9% of the allowable loading and occurs on connector 43 in the 242A-WT-J-[43 to 13A] jumper. The maximum B31.3 piping calculation result was 27% of allowed under thermal expansion.

The following subsections highlight the IQRPE structural design standard review for the 242-A Pump Room Jumpers as part of IQRPE Support to 242-A Evaporator Transfer Line Replacement Project components. They also identify any specific exceptions to this IQRPE certification as they relate to the structural review.

2.2.2 242-A Evaporator Transfer Line Replacement Project, 242-A Pump Room Jumpers Structural Evaluation

2.2.2.1 Jumper Assembly 242A-WT-J-[41 to 5]

The structural carbon and stainless steel components of jumper assembly 242A-WT-J-[41 to 5] (H-14-111834) are welded in accordance with AWS D1.1, *Structural Welding Code – Steel* or AWS D1.6, *Structural Welding Code – Stainless Steel,* as applicable, for statically loaded criteria. The jumper assembly was procured, constructed, and tested in accordance with RPP-14541, *Jumper Fabrication and Testing Specification for Tank Farms*. The drawings and analysis (H-14-111834, RPP-CALC-63213, RPP-CALC-63214, and ECN-715005*)* were reviewed to ensure that provisions are incorporated for proper loading, support, basis of design, and compliance with ASME B31.3. The calculations show the jumper and support designs are adequate. The jumper and support calculations considered dead loads, operating loads, thermal loads, seismic loads, and transient loads, as well as lifting loads and flexure while lifting.

2.2.2.2 Jumper Assembly 242A-WT-J-[43 to 13A]

The structural carbon and stainless steel components of jumper assembly 242A-WT-J-[43 to 13A] (H-14-111835) are welded in accordance with AWS D1.1 or AWS D1.6, *Structural Welding Code – Stainless Steel,* as applicable, for statically loaded criteria. The jumper assembly was procured, constructed, and tested in accordance with RPP-14541. The drawings and analysis (H-14-111835, RPP-CALC-63213, RPP-CALC-63214, and ECN-715005) were reviewed to ensure that provisions are incorporated for proper loading, support, basis of design, and compliance with ASME B31.3. The calculations show the jumper and support designs are adequate. The jumper and support calculations considered dead loads, operating loads, thermal loads, seismic loads, and transient loads, as well as lifting loads and flexure while lifting.

2.2.2.3 Structural Design Exceptions

Based on the above review, there are no IQRPE Certification exceptions to the structural design standards review.

2.2.2.4 Structural Design Assessment Conclusion

The IQRPE concurs that this design basis meets the requirements of 40 CFR 264.192(a) and WAC 173-303-640(3)(a).

2.2.3 Waste Compatibility

Regulations located in 40 CFR 265.192(a) and WAC 173-303-640 (3)(a) require tank systems be compatible with the wastes stored, treated, transported, or otherwise handled.

This section documents the waste compatibility and corrosion investigation of two (2) new jumper assemblies designed for installation in 242-A Pump Room for the 242-A Evaporator Transfer Line Replacement Project, 242-A Pump Room Jumpers. Components investigated were the jumper's piping materials. Jumper assembly materials were obtained from drawings H-14-111834 and H-14-111835. The materials of construction for those components of the IQRPE Support to 242-A Evaporator Transfer Line Replacement Project in contact with tank waste are summarized in Table 3 below.

Table 3: 242-A Evaporator Transfer Line Replacement Project, 242-A Pump Room Jumpers Materials of Construction

Item	Drawing Location	Description	Item #	Component Materials / Notes
Jumper Assembly: 242A-WT-J-[41 to 5]	H-14-111834	2" Horizontal Connector Assembly	8	Assembly: ASTM A276, Type 304L (RPP-CALC-63213) Gasket: PTFE, ASTM D3294
		2" Vertical Connector Assembly	9	Assembly: ASTM A276, Type 304L (RPP-CALC-63213) Gasket: PTFE, ASTM D3294
		Elbows	10	ASTM A403 WP 304L Stainless Steel
		Pipes	11	ASTM A312 TP 304L Stainless Steel
Jumper Assembly: 242A-WT-J-[43 to 13A]	H-14-111835	3" Horizontal Connector Assembly	8	Assembly: ASTM A276, Type 304L (RPP-CALC-63213) Gasket: PTFE, ASTM D3294
		3" Vertical Connector Assembly	9	Assembly: ASTM A276, Type 304L (RPP-CALC-63213) Gasket: PTFE, ASTM D3294
		Elbows	10	ASTM A403 WP 304L Stainless Steel
		Pipes	11	ASTM A312 TP 304L Stainless Steel

2.2.3.1 Anticipated Chemistry and Controls

All materials in contact with tank waste are austenitic stainless steel or polytetrafluoroethylene (PTFE). The properties of the PTFE gasket material are specified in H-2-3997, *Mech Equip Details Pipe Conn Gaskets*. Both of these materials have a long history of successful use with Hanford and other nuclear waste sites. Tank waste conditions that contribute to corrosion are strictly monitored and controlled for compliance with waste specifications in accordance with Table 1.5.1-1, *Waste Chemistry Limits for All DST Waste except the Interstitial Liquid in Tanks 241-AN-102, AN-106, AN-107, AY-101, and AY-102* in OSD-T-151-00007, *Operating Specifications for the Double-Shell Storage*. Waste is expected to be dilute tank waste, as water is being used as the sluicing medium to support waste removal from DST 241-AW-102.

Per RPP-CALC-63213, the maximum designed corrosion of the new jumpers is 0.005-in. based on a 25-year service life (0.2 mils per year). Piping is installed within a covered concrete structure to limit corrosion on the exterior from weather elements, and the waste composition that will be pumped through the assembly is strictly controlled, as noted earlier. The bounding fluid properties permitted by Table 1.5.1-1 of OSD-T-151-00007 will not contribute to a corrosion rate greater than the design corrosion rate of 0.2 mils per year.

Dissimilar materials are noted on the dunnage of jumper assembly 242A-WT-J-[41 to 5] (H-14-111834) and 242A-WT-J-[43 to 13A] (H-14-111835). The angle structural steel is also stainless steel (ASTM A276 or A479 304/304L), which is welded to austenitic stainless steel channels to support the process piping. Welding austenitic stainless steels to carbon and low alloy steels are established methods in the process and construction industries. Post-weld surface coating will ensure that galvanic corrosion cells cannot be set up across the joint where there is a composition gradient. All exposed carbon steel surfaces will be painted with two (2) coats of Amercoat®[1] 220, a water-based acrylic enamel or powder-coated (H-14-111834, Sheet 1, Note 5 and H-14-111835, Sheet 1, Note 5). Sacrificial corrosion of the carbon steel components in contact with the jumper assembly is therefore not expected. The stainless steel materials in contact with waste are not at risk of galvanic corrosion.

2.2.3.2 Waste Compatibility Exceptions

Based on the above review, there are no IQRPE Certification exceptions to the anticipated waste compatibility or corrosion issues with the 242-A Evaporator Transfer Line Replacement Project, 242-A Pump Room Jumpers materials of construction.

2.2.3.3 Waste Compatibility Assessment Conclusion

The IQRPE concurs that this design basis meets the requirements of 40 CFR 264.192(a) and WAC 173-303-640(3)(a).

2.2.4 Pressure Control System

40 CFR 265.192(a) and WAC 173-303-640(3)(a) require that an IQRPE certify that the proposed tank system has been designed with appropriate pressure control systems. The various components of the IQRPE Support to 242-A Evaporator Transfer Line Replacement Project, 242-A Pump Room Jumpers were evaluated for pressure control issues, and their details are presented in the sections listed below.

2.2.4.1 Jumper Assemblies 242A-WT-J-[41 to 5] and 242A-WT-J-[43 to 13A]

Jumper assembly 242A-WT-J-[41 to 5] was procured, constructed, and tested in accordance with RPP-14541. The drawings and analysis (H-14-111834, RPP-CALC-63213, and ECN-715005) were reviewed for pressure control issues. The jumper utilizes one (1) each PUREX 2-in. vertical connector for connection point “41” and one (1) each PUREX 2-in. horizontal connector for connection point “5” in its construction (H-14-111834 and H-2-32420, *Assembly Horizontal & Vertical 2” Connector*).

Jumper assembly 242A-WT-J-[43 to 13A] was procured, constructed, and tested in accordance with RPP-14541. The drawings and analysis (H-14-111835, RPP-CALC-63213, RPP-CALC-63214, and ECN-715005) were reviewed for pressure control issues. The jumper utilizes one (1) each PUREX 3-in. vertical connectors for connection points “43” and one (1) each PUREX 3-in.

[1] Amercoat is a trademark of PPG Industries, Inc., Pittsburgh, PA

horizontal connector for connection point "13A" in its construction (H-14-111835and H-2-32430, *Assembly Horizontal & Vertical 3" Connector*).

The design pressure for the jumper assembly is 400 psig and the design temperature is 200 °F (RPP-CALC-63213, H-14-111834, and H-14-111835). The jumper is required to undergo hydrostatic testing at 600 psig (H-14-111834 and H-14-111835).

The piping within the 242-A Evaporator Pump Room is connected to the DST WTS via wall nozzles and transfer lines. Operating procedures preclude manipulation of valves during waste transfers that could initiate a fluid transient (i.e., water hammer). The analysis (RPP-CALC-63213) assumes that future operating procedures for waste transfers to/from the 242-A Evaporator Pump Room will be prepared and that no valves (with the exception of the AW-02E flow control valve FCV-160 and 242-A Evaporator valve HV-CA1-1 as discussed in Section 6.2 of RPP-CALC-63213) will be manipulated during the waste transfers. Therefore, no water hammer analyses for waste transfers into or out of the 242-A Evaporator Pump Room have been performed.

RPP-CALC-63213 concluded the jumper assembly meets ASME B31.3 requirements. It included an evaluation of the highest loadings on the PUREX connectors per RPP-8359 and RPP-RPT-29063 and determined that the highest loadings on the PUREX connections occurs from sustained and seismically induced stresses. The maximum loading is 9% of the allowable loading and occurs on connector 43 in the 242A-WT-J-[43 to 13A] jumper.

The IQRPE concludes that the appropriate pressure control considerations for jumper assembly 242A-WT-J-[41 to 5] and 242A-WT-J-[43 to 13A] have been made.

2.2.4.2 Pressure Control System Exceptions

Based on the above review, there are no IQRPE Certification exceptions to the pressure control system review.

2.2.4.3 Pressure Control System Conclusion

The IQRPE concurs that this design basis meets the requirements of 40 CFR 265.192(a) and WAC 173-303-640(3)(a).

2.2.5 Secondary Containment System

40 CFR 265.193 and WAC 173-303-640(4) requires that an IQRPE certify that the proposed tank system has been designed with an appropriate secondary containment system. Secondary containment for tank systems that store, accumulate, or treat dangerous waste must be designed and installed to meet the requirements of 40 CFR 265.193(b) and WAC 173-303-640(4)(b).

Secondary containment for the 242-A Evaporator Transfer Line Replacement Project, 242-A Pump Room Jumpers is accomplished by the 242-A Evaporator Pump Room. The two (2) jumpers are entirely situated within the confines of the 242-A Evaporator Pump Room and rely on the floor and structure of the 242-A Evaporator Pump Room for secondary containment. The pump room is equipped with a sump well to collect drainage. The liquid collected in the sump is in turn routed to Tank 241-AW-102 via a 10" drain line (10" DR-334-M27; H-2-98995, *P&ID Drain System*).

Conclusions from the review of the design standards for the IQRPE Support to 242-A Evaporator Transfer Line Replacement Project, 242-A Pump Room Jumpers and the previous 242-A integrity assessment report (RPP-RPT-60098) are summarized below:

- The IQRPE Support to 242-A Evaporator Transfer Line Replacement Project, 242-A Pump Room Jumpers is designed to prevent any migration of wastes out of the secondary containment system to the soil, groundwater, or surface water at any time during the use of the tank system.
- The system is constructed of materials that are compatible with the wastes to be placed in the system.
- The system has been specified to have sufficient strength to withstand stresses due to static head during a release, pressure gradients, climatic conditions, and other stresses resulting from daily operations.
- The system is sloped or otherwise designed or operated to drain and remove liquids resulting from leaks, spills, or precipitation.

The IQRPE concludes that the appropriate secondary containment considerations have been made.

2.2.5.1 Secondary Containment System Exceptions

There are no exceptions to the IQRPE certification of the secondary containment review assessment**.**

2.2.5.2 Secondary Containment System Conclusion

The IQRPE concurs that this design basis meets the requirements of 40 CFR 265.193(b) and WAC 173-303-640(4)(b).

2.2.6 Ancillary Equipment Design

40 CFR 265.192 and WAC 173-303-640(3) require that an IQRPE certify that the proposed tank system has been designed with appropriate ancillary equipment in accordance with the requirements of 40 CFR 265.192(e), and WAC 173-303-640(3)(f) and (4)(f). WAC 173-303-040, *Definitions*, defines "Ancillary Equipment" as any device including, but not limited to, such devices as piping, fittings, flanges, valves, and pumps, that is used to distribute, meter, or control the flow of dangerous waste from its point of generation to a storage or treatment tank(s), between dangerous waste storage and treatment tanks to a point of disposal on-site, or to a point of shipment for disposal off-site. A review of the ancillary equipment design is normally part of the IQRPE review. The scope of this review includes components listed as in-scope in Section 1.3 and as described in the review sections above. Piping, fittings, flanges, valves, and pumps have been evaluated by the IQRPE throughout this report, which includes all ancillary equipment in-scope for this design assessment. No other ancillary equipment was identified.

2.2.6.1 Ancillary Equipment Design Exceptions

Based on the above review, there are no IQRPE Certification exceptions to the ancillary equipment design review.

2.2.6.2 Ancillary Equipment Design Conclusion

The IQRPE concurs that this design basis meets the requirements of 40 CFR 265.192 and WAC 173-303-640(3).

2.2.7 P&ID Review

The P&ID details for the IQRPE Support to 242-A Pump Room Jumpers as part of the 242-A Evaporator Waste Transfer Line Replacement Project, are depicted on H-2-98988, Sheet 2; H-2-98989, Sheet 1, and ECN-715005.

The IQRPE concludes that the appropriate P&ID review has been made.

2.2.8 Corrosion Assessment

40 CFR 265.192 and WAC 173-303-640(3) require an IQRPE corrosion assessment of only the external portion of the primary containment that is in direct contact with soil or water.

The components of the IQRPE Support to 242-A Pump Room Jumpers as part of 242-A Evaporator Waste Transfer Line Replacement Installation Project are located in 242-A Pump Room and will not be in contact with soil or water.

Additional aspects of corrosion are discussed in the Waste Compatibility Section 2.2.3.

The IQRPE concludes that appropriate corrosion considerations have been made.

2.2.8.1 Corrosion Assessment Exceptions

Based on the above requirements, there are no IQRPE Certification exceptions to the corrosion assessment review with the materials for 242-A Pump Room Jumper assemblies.

2.2.8.2 Corrosion Assessment Conclusion

The IQRPE concurs that this design basis meets the requirements of 40 CFR 265.192 and WAC 173-303-640(3).

2.2.9 Recommended Inspection Schedule for Future Integrity Assessment

Per the requirements of WAC 173-303-640(2)(e), “a schedule for conducting integrity assessments over the life of the tank to ensure that the tank retains its structural integrity and will not collapse, rupture, or fail. The schedule must be based on the results of past integrity assessments, age of the tank system, materials of construction, characteristics of the waste, and any other relevant factors.”

The new equipment installed under this document includes:

- New jumper assembly: 242A-WT-J-[41 to 5]
- New jumper assembly: 242A-WT-J-[43 to 13A]

The design life of the 242-A Evaporator Transfer Line Replacement Project components (MT-50400, *242-A Evaporator Waste Transfer Line Replacement*) is:

- Pit cover blocks/plates shall have a design life of 35 years.

- Removable components beneath cover blocks/plates, including valves and jumpers should have a design life of 25 years without maintenance, where practical.
- Buried waste transfer line piping shall have a design life of 50 years.

Because these items are new, no prior integrity assessments have been completed. Since these items are expected to be installed in 2020, the age of these elements is new. The materials of construction are compatible with the wastes as detailed in Section 2.2.3 of this report. The characteristics of the wastes is also covered in that section. Additionally, corrosion is evaluated in Section 2.2.8 of this report. To allow time for an integrity assessment, it is recommended that a complete Integrity Assessment Report be completed of the above tank system elements within 15 years after initial installation or first contact with waste, whichever is later. It is anticipated these new elements of the tank system will be evaluated as part of the entire system and will be included in the overall IQRPE Integrity Assessment Report for this system in accordance with the interval for integrity assessment established by the operator for the system as long as the scheduled integrity assessment falls within the recommended period provided here.

3.0 DESIGN REVIEW ASSESSMENT CERTIFICATIONS

The IQRPE Support to 242-A Evaporator Transfer Line Replacement Project, 242-A Pump Room Jumpers, as previously described, has been reviewed by the IQRPE and was assessed to be in compliance with the applicable sections of 40 CFR 265.192 and WAC 173-303-640(3). These results are based on a review of the applicable codes, standards, and documents.

A listing of the IQRPE, Professional Engineers, and other engineers who participated in preparation of this design assessment is provided below:

Independent Qualified Registered Professional Engineer

Sohan S. Gahir
- P.E., Mechanical Engineering, License No. 18503

Professional Engineers

Alexander P. Butterfield
- P.E., Mechanical Engineering, License No. 52255

Andrew S. Klein
- P.E., Chemical, Fire Protection, License No. 47831

Michel J. Langevin
- P.E., Mechanical Engineering, License No. 23759

Paul M. Giever
- S.E., Structural Engineering, License No. 28084

BS Degreed Engineer

Nathaniel R. Weinman
- E.I.T., Mechanical Engineering, Enrollment Number E-11818

The certifications below are in accordance with the requirements of 40 CFR 270.11(d), *Signatories to Permit Applications and Reports,* and WAC 173-303-810(13)(a), *Certification.*

Report Lead IQRPE:

40 CFR 270.11(d)

I certify under penalty of law that this document and all attachments were prepared under my direction or supervision according to a system designed to assure that qualified personnel properly gather and evaluate the information submitted. Based on my inquiry of the person or persons who manage the system, or those persons directly responsible for gathering the information, the information submitted is, to the best of my knowledge and belief, true, accurate, and complete. I am aware that there are significant penalties for submitting false information, including the possibility of fine and imprisonment for knowing violations.

WAC 173-303-810(13)(a)

I certify under penalty of the law that this document and all attachments were prepared under my direction or supervision in accordance with a system designed to assure that qualified personnel properly gather and evaluate the information submitted. Based on my inquiry of the person or persons who manage the system, or those persons directly responsible for gathering the information, the information submitted is, to the best of my knowledge and belief, true, accurate, and complete. I am aware that there are significant penalties for submitting false information, including the possibility of fine and imprisonment for knowing violations.

SOHAN S. GAHIR
STATE OF WASHINGTON
18503
REGISTERED
PROFESSIONAL ENGINEER

12/3/2020

Report Reviewed by:

Sohan S. Gahir, P.E.
Independent Qualified Registered Professional Engineer

December 3, 2020
Date

4.0 REFERENCES

40 CFR 265.192, "Design and Installation of New Tank Systems or Components," Code of Federal Regulations, as amended.

40 CFR 270.11(d), "Signatories to Permit Applications and Reports," Code of Federal Regulations, as amended.

40 CFR Part 265, "Interim Status Standards for Owners and Operators of Hazardous Waste Treatment, Storage, and Disposal Facilities," Code of Federal Regulations, as amended.

ASME B31.3, 2016, Process Piping, American Society of Mechanical Engineers, New York, New York.

ASTM A276/A276M-17, 2017, *Standard Specification for Stainless Steel Bars and Shapes*, ASTM International, West Conshohocken, Pennsylvania.

ASTM A312/A312M-19, 2019, *Standard Specification for Seamless, Welded, and Heavily Cold Worked Austenitic Stainless Steel Pipes*, ASTM International, West Conshohocken, Pennsylvania.

ASTM A403/A403M-19, 2019, *Standard Specification for Wrought Austenitic Stainless Steel Piping Fittings*, ASTM International, West Conshohocken, Pennsylvania.

ASTM D3294 -15, 2015, *Standard Specification for Polytetrafluoroethylene (PTFE) Resin Molded Sheet and Molded Basic Shapes*, ASTM International, West Conshohocken, Pennsylvania.

AWS D1.1/D1.1M, 2015, *Structural Welding Code - Steel*, American Welding Society, Miami, Florida.

AWS D1.6/D1.6M, 2007, *Structural Welding Code - Stainless Steel*, American Welding Society, Miami, Florida.

DA-327971-01, 2020, *242-A Evaporator Transfer Line Replacement Project, 242-A Pump Room Structural Modifications (Wall Nozzles)*, Rev. 1, Meier Architecture • Engineering, Kennewick, Washington.

DA-327971-03, 2020, *242-A Evaporator Transfer Line Replacement Project, Transfer Lines/AW Farm Jumpers and Wall Nozzles*, Rev. 0, Meier Architecture • Engineering, Kennewick, Washington.

ECN-715005, 2020, *242-A Evaporator Pump Room Jumper Installation* (*41 to 5 and 43 to 13A)*, Rev 0, U.S. Department of Energy, Richland, Washington.

H-14-111834, 2020, Sheets 1-3, *Jumper Assembly 41-5, 242-A Pump Room*, Rev. 0, U.S. Department of Energy, Richland, Washington.

H-14-111835, 2020, Sheets 1-2, *Jumper Assembly 43-13A, 242-A Pump Room*, Rev. 0, U.S. Department of Energy, Richland, Washington.

H-2-32420, 2018, Sheet 1, *Assembly Horizontal & Vertical 2" Connector*, Rev. 12, U.S. Department of Energy, Richland, Washington.

H-2-32430, 2018, Sheet 1, *Assembly Horizontal & Vertical 3" Connector,* Rev. 12, U.S. Department of Energy, Richland, Washington.

H-2-3997, 2019, Sheet 1, *Mech Equip Details Pipe Conn Gaskets,* Rev. 17, U.S. Department of Energy, Richland, Washington.

H-2-98988, 2019, Sheet 2, *P&ID Evap Recirc System,* Rev. 21, U.S. Department of Energy, Richland, Washington.

H-2-98989, 2019, Sheet 1, *P&ID Slurry System,* Rev. 29, U.S. Department of Energy, Richland, Washington.

H-2-98995, 2018, Sheet 2, *P&ID Drain System,* Rev. 16, U.S. Department of Energy, Office of River Protection, Richland, Washington.

IA-327971-02, 2020, *IQRPE Installation Assessment Report For 242-A Evaporator Transfer Line Replacement Project, 242-A Pump Room Jumpers*, Rev. 0, Meier Architecture • Engineering, Kennewick, Washington.

IP-327971-02, 2020, *IQRPE Inspection Plan For 242-A Evaporator Transfer Line Replacement, 242-A Pump Room Jumpers*, Rev. 0, Meier Architecture • Engineering, Kennewick, Washington.

MT-50400, 2020, *242-A Evaporator Waste Transfer Line Replacement*, Rev. 1, Washington River Protection Solutions, LLC, Richland, Washington.

OSD-T-151-00007, 2020, *Operating Specification for the Double Shell Storage Tanks*, Rev 27, U.S. Department of Energy, Richland, Washington.

Publication 94-114, 2014, Guidance for Assessing and Certifying Tank Systems, Washington State Department of Ecology.

RPP-14541, 2017, Jumper Fabrication and Testing Specification for Tank Farms, Rev 08, Washington River Protection Solutions, LLC, Richland, Washington.

RPP-25153, 2007, Volume 3: IQRPE DST System Integrity Assessment - Waste Compatibility, Rev. 1, CH2M HILL Hanford Group, Inc., Richland, Washington.

RPP-27591, 2007, Volume 2: IQRPE DST System Integrity Assessment - Pipeline Integrity, Rev. 1, CH2M HILL Hanford Group, Inc., Richland, Washington.

RPP-8359, 2013, Analysis of 3-inch by 3-inch PUREX Type Jumper Connector, Rev. 00A, CH2M HILL Hanford Group, Inc., Richland, Washington.

RPP-CALC-63213, 2020. ASME B31.3 Analyses of the 41 to 5 and 43 to 13A Jumpers for the 242-A Evaporator Pump Room, Rev 0, U.S. Department of Energy, Richland, Washington.

RPP-CALC-63214, 2020. 242-A Evaporator Pump Room Jumpers Supporting Analyses, Rev 0, U.S. Department of Energy, Richland, Washington.

RPP-RPT-29063, 2012, *Qualification of 3-in. PUREX Connector to ASME B31.3*, Rev. 1, Washington River Protection Solutions, LLC, Richland, Washington.

RPP-RPT-36800, 2011, *Qualification of 2-in. PUREX Connector to ASME B31.3*, Rev. 2, Washington River Protection Solutions, LLC, Richland, Washington.

RPP-RPT-60098, 2018, *242-A Evaporator System Integrity Assessment Report*, Rev. 0, Washington River Protection Solutions, LLC, Richland, Washington.

RPP-RPT-58441, 2016, *Double-Shell Tank System Integrity Assessment Report (DSTAR)*, Rev. 1, Washington River Protection Solutions, LLC, Richland, Washington.

Statement of Work (SOW) No. 327971, 2019, *242-Evaporator Transfer Line Replacement IQRPE (BMA# 64658)*, Rev. 0, Washington River Protection Solutions, LLC, Richland, Washington.

WAC 173-303, "*Dangerous Waste Regulations*," Washington Administrative Code, as amended.

WAC 173-303-640(3), "*Design and Installation of New Tank Systems or Components*," Washington Administrative Code, as amended.

WAC 173-303-640, "*Tank Systems*," Washington Administrative Code, as amended.

WAC 173-303-810(13)(a), "*Certification*," Washington Administrative Code, as amended.

STATE OF WASHINGTON
DEPARTMENT OF ECOLOGY
3100 Port of Benton Blvd • Richland, WA 99354 • (509) 372-7950
711 for Washington Relay Service • Persons with a speech disability can call (877) 833-6341

DETERMINATION OF SIGNIFICANCE AND NOTICE OF ADOPTION OF EXISTING ENVIRONMENTAL DOCUMENTS

Description of Current Proposal:
The U.S. Department of Energy-Office of River Protection (USDOE-ORP) requested a Dangerous Waste Regulations (DWR), Washington Administrative Code (WAC) Chapter 173-303) permit modification to the 242-A Evaporator, specifically to install replacement (new) waste transfer lines connecting the AW-Farm to the 242-A Evaporator. This modification is in response to the existing slurry transfer line (SL-167) failed secondary containment pressure tests in 2018. Replacement of the transfer lines involves excavating and drilling new penetrations for the new lines and some jumper upgrades inside the 242-A Evaporator building.

Proponent:
U.S. Department of Energy, Office of River Protection (USDOE-ORP), Richland, Washington

Location of Current Proposal:
U.S. Department of Energy (USDOE), Hanford Site, Benton County, Washington

Title of Document Being Adopted:
Final Tank Closure & Waste Management (TC&WM) Environmental Impact Statement (EIS) (DOE/EIS-0391)
Final Tank Waste Remediation System (TWRS) Environmental Impact Statement (EIS) (DOE/EIS-0189)

Agency that Prepared Document Adopted:
U.S. Department of Energy

Description of document (or portions) being adopted:
The Department of Ecology (Ecology) previously issued a State Environmental Policy Act (SEPA) Determination of Non-Significance for permitting 242-A Evaporator on December 12, 1997 (Attached).
Additional evaluation of the potential adverse environmental impacts of the 242-A Evaporator was done in the *TWRS EIS* (DOE/EIS-0189), and the *TC&WM EIS* (DOE/EIS-0391). For the current proposal, Ecology is also incorporating by reference the more detailed evaluation of the 2010 Final Environmental Assessment (EA), *Upgrades and life Extension of the 242-A Evaporator* (EA-1682).

If the document being adopted has been challenged (WAC 197-11-630), please describe:
N/A

The document being adopted is available:
TWRS EIS (DOE/EIS-0189), issued on August 5, 1996, is available online at
https://www.energy.gov/nepa/eis-0189-tank-waste-remediation-system-twrs-richland-wa
TC&WM EIS (DOE/EIS-0391), issued on December 5, 2012, is available online at
https://www.hanford.gov/page.cfm/FinalTCWMEIS
See also Final EA, *Upgrades and life Extension of the 242-A Evaporator (EA-1682)*, available on-line at https://www.energy.gov/nepa/downloads/doeea-1682-final-environmental-assessment-and-finding-no-significant-impact

EIS Required:
Ecology has determined these proposals are likely to have a significant adverse impact on the environment. To meet the requirements of RCW 43.21C.030(2)(c), Ecology is adopting the portions of the documents described above. Under WAC 197-11-360, there will be no scoping process for this EIS.

Ecology identified and adopted the portions of the documents as being appropriate for these proposals after independent review. These portions of the documents meet environmental review needs for the current proposal and will accompany the proposal to the decision maker. The lead agency will not act on this proposal until completion of the public comment period on the Dangerous Waste Regulations (DWR) permit modification, in accordance with WAC 173-303-840.

Name of agency adopting document:
State of Washington Department of Ecology, Nuclear Waste Program

Contact person (if other than responsible official):
Nina Menard
Section Manager (Interim), Cleanup Section
3100 Port of Benton Boulevard
Richland, Washington 99354
(509) 372-7941

Responsible Official:
John B. Price
Section Manager, Tri-Party Agreement Section
3100 Port of Benton Boulevard
Richland, Washington 99354
(509) 372-7921

Date: January 11, 2021

Signature: John B. Price

97-8013

RECEIVED
DEC 17 1997
DEPARTMENT OF ECOLOGY
ENVIRONMENTAL REVIEW

DETERMINATION OF NONSIGNIFICANCE

Description of proposal Permitting of the 242-A Evaporator under the Dangerous Waste Portion of the Hanford Facility-Wide Permit. The Evaporator receives and treats mixed waste from Hanford's Double Shell Tank System. It separates wastes into a slurry which is returned to the tanks and a condensate which is then treated for disposal.

Proponent U.S. Department of Energy - Richland Office

Location of proposal, including street address if any The Evaporator is located in the 200 East Area of the Hanford Site, approximately 20 to 25 miles northwest of the city of Richland.

Lead agency Department of Ecology, Nuclear Waste Program

The lead agency for this proposal has determined that it does not have a probable significant impact on the environment. An environmental impact statement (EIS) is not required under RCW 43.21C.030(2)(c). This decision was made after review of a completed environmental checklist and other information on file with the lead agency. This information is available to the public on request.

☐ There is no comment period for this DNS.

☒ This DNS is issued under WAC 197-11-340(2); the lead agency will not act on this proposal for 15 days from the date below. Comments must be submitted by January 7, 1998.

Responsible official Mike Wilson

Position/title Manager, Nuclear Waste Program

Address P.O. Box 47600, Olympia, WA 98504-7600

Date 12-12-97 Signature [signature]

The following information is incorporated by reference into this DNS under WAC 197-11-635 and, upon request to the address above, is available for review during the comment period:

Document: The 242-A Dangerous Waste Permit Application (DOE/RL - 90-42 Rev 1)

Relevant Content: The permit application describes the operation and planned closure of the facility, including its ability to comply with the Washington State Dangerous Waste Regulations (WAC 173-303)

Postmark Date

Response to Comments - 242-A Evaporator Wall Penetration to Connect the Double Shell Tanks

May 8, 2020 to July 7, 2020

By Andrew Pomiak

For the **Nuclear Waste Program**

Washington State Department of Ecology

Richland, Washington

September 2020, Publication 20-05-024

DEPARTMENT OF ECOLOGY State of Washington

Publication Information

This document is available on the Department of Ecology's website at:
https://fortress.wa.gov/ecy/publications/summarypages/2005024.html

Ecology publishes this document to meet the requirements of Washington Administrative Code 173-303-840 (9).

Cover photo credit

- Photo by Washington State Dept. of Ecology, July 26, 2020

Contact Information

Andrew Pomiak, 242-A Evaporator Permit Lead
Nuclear Waste Program
3100 Port of Benton Blvd
Richland, WA 99354
Phone: 509-372-7950
Email: Hanford@ecy.wa.gov

Website[1]: Washington State Department of Ecology

ADA Accessibility

The Department of Ecology is committed to providing people with disabilities access to information and services by meeting or exceeding the requirements of the Americans with Disabilities Act (ADA), Section 504 and 508 of the Rehabilitation Act, and Washington State Policy #188.

To request an ADA accommodation, contact Ecology by phone at 509-372-7950 or email at Daina.McFadden@ecy.wa.gov. For Washington Relay Service or TTY call 711 or 877-833-6341. Visit Ecology's website for more information.

[1] www.ecology.wa.gov/contact

Department of Ecology's Regional Offices

Map of Counties Served

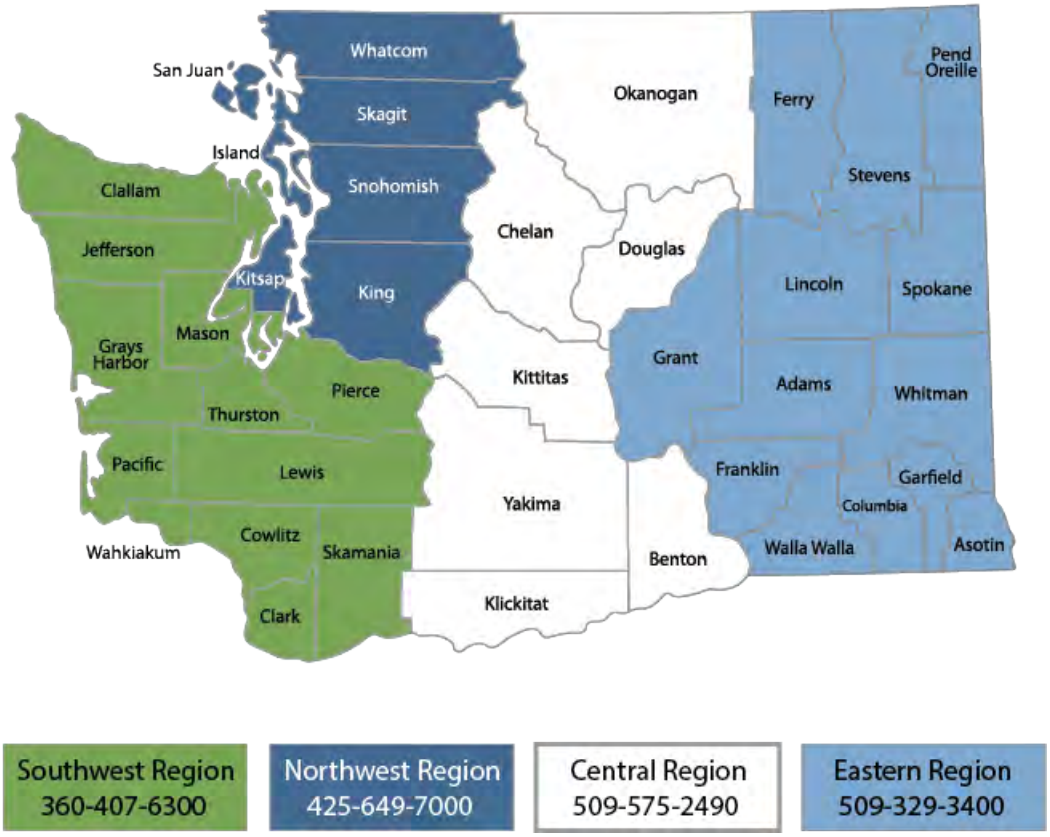

Region	Counties served	Mailing Address	Phone
Southwest	Clallam, Clark, Cowlitz, Grays Harbor, Jefferson, Mason, Lewis, Pacific, Pierce, Skamania, Thurston, Wahkiakum	PO Box 47775 Olympia, WA 98504	360-407-6300
Northwest	Island, King, Kitsap, San Juan, Skagit, Snohomish, Whatcom	3190 160th Ave SE Bellevue, WA 98008	425-649-7000
Central	Benton, Chelan, Douglas, Kittitas, Klickitat, Okanogan, Yakima	1250 W Alder St Union Gap, WA 98903	509-575-2490
Eastern	Adams, Asotin, Columbia, Ferry, Franklin, Garfield, Grant, Lincoln, Pend Oreille, Spokane, Stevens, Walla Walla, Whitman	4601 N Monroe Spokane, WA 99205	509-329-3400
Headquarters	Across Washington	PO Box 46700 Olympia, WA 98504	360-407-6000

Response to Comments
242-A Evaporator Wall Penetration to Connect the Double Shell Tanks

May 8, 2020 to July 7, 2020

Nuclear Waste Program
Washington State Department of Ecology
Richland, WA

September 2020 | Publication 20-05-024

DEPARTMENT OF
ECOLOGY
State of Washington

Table of Contents

Introduction 6

Reasons for Issuing the Permit 7

Public Involvement Actions 7

List of Commenters 9

Attachment 1: Comments and Responses

Appendix A. Copies of All Public Notices

Introduction

The Washington State Department of Ecology's Nuclear Waste Program (Ecology) manages dangerous waste within the state by writing permits to regulate its treatment, storage, and disposal.

When a new permit or a significant modification to an existing permit is proposed, Ecology holds a public comment period to allow the public to review the change and provide formal feedback. (See Washington Administrative Code [WAC] 173-303-830 for types of permit changes.)

The Response to Comments is the last step before issuing the final permit, and its purpose is to:

- Specify which provisions, if any, of a permit will become effective upon issuance of the final permit, providing reasons for those changes.
- Describe and document public involvement actions.
- List and respond to all significant comments received during the public comment period and any related public hearings.

This Response to Comments is prepared for:

Comment period	242-A Evaporator Wall Penetration to Connect the Double Shell Tanks, May 8, 2020 to July 7, 2020
Permit	*Hanford Facility Resource Conservation and Recovery Act (RCRA) Permit for the Treatment, Storage, and Disposal of Dangerous Waste, Part III, Operating Unit Group 4 (WA7890008967), 242-A Evaporator*
Permittees	United States Department of Energy, Office of River Protection and Washington River Protection Solutions
Original Issuance date	November 11, 1980
Effective date	October 4, 2020

To see more information related to the Hanford Site and nuclear waste in Washington, please visit our webpage, Hanford Cleanup[2].

[2] https://www.ecology.wa.gov/Hanford

Reasons for Issuing the Permit

The 242-A Evaporator facility is a mixed-waste treatment and storage unit that concentrates the liquid portion of double-shell tank waste at Hanford.

In 2018, transfer lines from the Double-Shell Tank AW-Farm to the 242-A Evaporator failed encasement pressure tests. After more testing, the permittees decided to replace the lines rather than repairing and recertifying them.

This permit modification allows facility changes at the 242-A Evaporator to support installation of these new lines. The changes include new wall penetrations (including compliant secondary containment), new wall nozzles, and other facility upgrades.

Permitting of Hanford dangerous waste management is administratively divided into unit-groups, most often as an operation or collection of tank farms. The 242-A Evaporator and the double-shell tanks are separate unit groups. The boundary between the two unit groups is the outside of the 242-A Evaporator building wall.

This permit modification only addresses changes to the 242-A Evaporator unit group, which has a final status permit. The portions of the transfer line installations done outside of the 242-A Evaporator building are administratively controlled by the double-shell tank system and are being installed under Washington Administrative Code 173-303-805, *Interim Status Permits*.

Public Involvement Actions

The U.S. Department of Energy (USDOE) encouraged public comment on the permit modification package, including changes to Chapter 4.0, "Process Information," and the Permit Conditions, during a 60-day public comment period held May 8 through July 7, 2020.

The following actions were taken to notify the public:

- Mailed a public notice announcing the comment period to 1184 members of the public.
- Distributed copies of the public notice to members of the public at Hanford Advisory Board meetings.
- Placed a public announcement legal classified advertisement in the *Tri-City Herald* on May 8, 2020.
- Emailed a notice announcing the start of the comment period to the Hanford-Info email list, which has 1322 recipients.

USDOE held a public meeting on June 8, 2020, at 5:30 pm via GoToWebinar. There were 39 counted attendees, about half of whom were members of the public. Others may have joined the webinar anonymously, so the attendee count may not be accurate. No comments were collected during the meeting.

The Hanford information repositories located in Richland, Spokane, and Seattle, Washington, and Portland, Oregon, received the following documents for public review:

- Public Notice
- Transmittal letter
- Fact Sheet for the proposed 242-A Evaporator Permit Modification
- Draft 242-A Evaporator Permit Modification

The following public notices for this comment period are in Appendix A of this document:

- Fact sheet
- Classified advertisement in the *Tri-City Herald*
- Notices sent to the Hanford-Info email list

List of Commenters

The table below lists the names of organizations or individuals who submitted a comment on the [unit name] Permit modification. The comments and responses are in Attachment 1.

Commenter	Organization
Mike Conlan	Citizen
Nancy Arbuckle	Citizen
James Millbauer	Citizen
John Wolcott	Citizen
Shannon Cram	Citizen
Christian Swenson	Citizen
Steven Gary	Citizen
Kaitlin McCarthy	Citizen
Heather Berg	Citizen
Harry Anonymous	Citizen
Becca Hall	Citizen
Tom Carpenter	Hanford Challenge
Anonymous	Citizen

Attachment 1: Comments and Responses

Description of comments:

Ecology accepted comments from May 8, 2020, through July 7, 2020. This section provides a summary of comments that we received during the public comment period and our responses, as required by RCW 34.05.325(6)(a)(iii). Comments are grouped by individual and each comment is addressed separately.

I-1: MIKE CONLAN

Comment I-1-1

1. Remove all nuclear waste,
2. Do not allow anymore nuclear waste into the facility,
3. Replace all the single storage tanks,
4. Stop all the nuclear leakage entering the Columbia River
5. Glassification!

Response to I-1-1

Thank you for your comment.

Ecology is working to ensure that long-term storage, treatment and disposal of the waste is protective of human health and the environment.

The proposed permit changes are not to allow new waste, but to better manage the waste already at Hanford.

Single-shell tanks are not in the scope of this permit modification. Ecology does agree the tanks pose a threat. We believe a better approach to addressing it is to remove the waste from the single-shell tanks and put it in the compliant double-shell tanks to prepare for eventual treatment in the Waste Treatment Plant now being built. When completed the Waste Treatment and Immobilization Plant will have the treatment capability to vitrify tank waste.

The continued operation of the 242-A Evaporator is a positive step to eventual treatment of tank waste currently stored at Hanford.

Prevention of groundwater and surface water impacts are addressed in operations associated with other units.

I-2: NANCY ARBUCKLE

Comment I-2-1

To Whom It May Concern,

Thank you for the opportunity to provide public comment on the Class Two Permit Modification for the 242-A Evaporator. I am writing because I care about efforts to protect human and environmental health and I believe in transparency and accountability.I was born in Richland when my Dad worked at the reactors and I have had two family members die relatively young. I feel a personal responsibility for preventing further harm to people and the planet.

Here are my biggest concerns:

• Safety: Make sure requirements are in place to protect workers and the environment from the radioactivity and chemical toxins and toxic chemical vapors present in the waste that will be moved back and forth through the new transfer lines and 242-A Evaporator.

• Transparency: It was unclear in the fact-sheet and public meeting materials provided for this comment period that this action to drill three holes into the evaporator was being taken because the existing transfer lines for tank waste were not safe. It was also unclear how important the evaporator is to tank waste treatment and that it is not currently operating. Share the details of the action AND the problems underpinning that action – like failing tank waste transfer pipes, and the timeline for fixing problems.

• High-Level Tank Waste: When you are soliciting input on anything that deals with treating tank waste, share the big picture of where the facility or action fits with immobilizing Hanford's high-level tank waste in glass.

• Make a Long-Term Plan: Make and share the plan for how this aging 43-year-old facility will safely work for another 40 years.

Thank you for considering my comments.

Sincerely,

Nancy Arbuckle

Response to I-2-1

Thank you for your comment. Ecology greatly appreciates your concern and ability to provide input.

1. *Safety: Ecology shares similar concerns about protecting workers and the environment. The 242-A Evaporator has extensive administrative and engineering controls in place to protect workers and the environment. The new wall penetrations and transfer lines will further increase safety during transfers by preventing further pipeline failures.*

   The Permittees have established procedures in place to address worker safety and chemical vapor protection that will be followed during construction. A comprehensive work planning process will be implemented and work packages will incorporate specific worker safety protocols for this project.

2. *Transparency: The new transfer lines are being installed because the existing lines are no longer fit-for-use. Installation of these new lines will be conducted once the permit modification is effective. Campaigns will resume once these new lines are installed, currently planned for 2022.*

   The Hanford permit has been administratively separated into unit groups. The boundary between the DSTs and the 242-A Evaporator has been designated at the outside of the 242-A building wall. Therefore, the permit modification information on the project to install new transfer lines was limited to those actions that will occur within the exterior building wall of the 242-A building.

However, Ecology understands the public concern about the limits these administrative separations present. Ecology is working to ensure the fact sheet and presentations during the public comment period display the complex interactions between unit groups and the reasons for modifying the permit.

3. *High-Level Tank Waste: Ecology is working on including more comprehensive information provided in fact sheets and during public meetings. This will include discussions of the big picture how the facility supports immobilizing Hanford's high-level tank waste into glass.*
4. *Make a Long-Term Plan: United States Department of Energy (USDOE) produced a life-extension report, HNF-3327 Engineering Study for the 242-A Life Extension Upgrades for Fiscal Years 2010 Through 2052, Revision 2, for the 242-A Evaporator as well as performs periodic assessment of the tank systems integrity. Ecology will continue to monitor the facility and ensure it will work safely through its lifespan. These pipelines were identified in the report as necessary upgrades, and other upgrades have happened since the report was issued.*

I-3: JAMES MILLBAUER

Comment I-3-1

To Whom It May Concern,

Thank you for the opportunity to provide public comment on the Class Two Permit Modification for the 242-A Evaporator. I am writing because I care about efforts to protect human and environmental health and I believe in transparency and accountability.

Thank you for considering my comments:

• Prioritize Safety: Make sure requirements are in place to protect workers and the environment from the radioactivity and chemical toxins and toxic chemical vapors present in the waste that will be moved back and forth through the new transfer lines and 242-A Evaporator. As a current Hanford worker, I ask that you to please put worker safety first as we clean up the most contaminated site in the USA.

• Increase Transparency: It was unclear in the fact-sheet and public meeting materials provided for this comment period that this action to drill three holes into the evaporator was being taken because the existing transfer lines for tank waste were not safe. It was also unclear how important the evaporator is to tank waste treatment and that it is not currently operating. Share the details of the action AND the problems underpinning that action – like failing tank waste transfer pipes, and the timeline for fixing problems.

• Share the Big Picture: When you are soliciting input on anything that deals with treating tank waste, share the big picture of where the facility or action fits with immobilizing Hanford's high-level tank waste in glass.

• Make a Long-Term Plan: Make and share the plan for how this aging 43-year-old facility will safely work for another 40 years.

Sincerely,

James P. Millbauer
713 S. Young Pl.
Kennewick, WA. 99336

Response to I-3-1

Thank you for your comment. Ecology greatly appreciates your concern and ability to provide input.

1. *Safety: Ecology shares similar concerns about protecting workers and the environment. The 242-A Evaporator has extensive administrative and engineering controls in place to protect workers and the environment. The new wall penetrations and transfer lines will further increase safety during transfers by preventing further pipeline failures.*

   The Permittees have established procedures in place to address worker safety and chemical vapor protection that will be followed during construction. A comprehensive work planning process will be implemented and work packages will incorporate specific worker safety protocols for this project.

2. *Transparency: The new transfer lines are being installed because the existing lines are no longer fit-for-use. Installation of these new lines will be conducted once the permit modification is effective. Campaigns will resume once these new lines are installed, currently planned for 2022.*

   The Hanford permit has been administratively separated into unit groups. The boundary between the DSTs and the 242-A Evaporator has been designated at the outside of the 242-A building wall. Therefore, the permit modification information on the project to install new transfer lines was limited to those actions that will occur within the exterior building wall of the 242-A building.

   However, Ecology understands the public concern about the limits these administrative separations present. Ecology is working to ensure the fact sheet and presentations during the public comment period display the complex interactions between unit groups and the reasons for modifying the permit.

3. *High-Level Tank Waste: Ecology is working on including more comprehensive information provided in fact sheets and during public meetings. This will include discussions of the big picture how the facility supports immobilizing Hanford's high-level tank waste into glass.*

4. *Make a Long-Term Plan: United States Department of Energy (USDOE) produced a life-extension report, HNF-3327 Engineering Study for the 242-A Life Extension Upgrades for Fiscal Years 2010 Through 2052, Revision 2, for the 242-A Evaporator as well as performs periodic assessment of the tank systems integrity. Ecology will continue to monitor the facility and ensure it will work safely through its lifespan. These pipelines were identified*

in the report as necessary upgrades, and other upgrades have happened since the report was issued.

I-4: JOHN WOLCOTT

Comment I-4-1

Thank you for the opportunity to provide comment on the Class Two Permit Modification for the 242-A Evaporator. I am writing because I care about efforts to protect human and environmental health and I believe transparency and accountability are essential to completing the goal of remedying this situation.

With any action regarding cleanup at the Hanford site, but specifically regarding the DOE's current strategy, the following points are critical:

• Prioritize Safety: Make sure requirements are in place to protect workers and the environment from the radioactivity and chemical toxins and toxic chemical vapors present in the waste that will be moved back and forth through the new transfer lines and 242-A Evaporator.

• Increase Transparency: It was unclear in the fact-sheet and public meeting materials provided for this comment period that this action to drill three holes into the evaporator was being taken because the existing transfer lines for tank waste were not safe. It was also unclear how important the evaporator is to tank waste treatment and that it is not currently operating. Share the details of the action AND the problems underpinning that action – like failing tank waste transfer pipes, and the timeline for fixing problems.

• Share the Big Picture: When you are soliciting input on anything that deals with treating tank waste, share the big picture of where the facility or action fits with immobilizing Hanford's high-level tank waste in glass.

• Make a Long-Term Plan: Make and share the plan for how this aging 43-year-old facility will safely work for another 40 years.

Thanks for your consideration of my comments. Please help us clean up this mess.

John Wolcott

Response to I-4-1

Thank you for your comment. Ecology greatly appreciates your concern and ability to provide input.

1. *Safety: Ecology shares similar concerns about protecting workers and the environment. The 242-A Evaporator has extensive administrative and engineering controls in place to protect workers and the environment. The new wall penetrations and transfer lines will further increase safety during transfers by preventing further pipeline failures.*

   The Permittees have established procedures in place to address worker safety and chemical vapor protection that will be followed during construction. A comprehensive

work planning process will be implemented and work packages will incorporate specific worker safety protocols for this project.

2. *Transparency: The new transfer lines are being installed because the existing lines are no longer fit-for-use. Installation of these new lines will be conducted once the permit modification is effective. Campaigns will resume once these new lines are installed, currently planned for 2022.*

   The Hanford permit has been administratively separated into unit groups. The boundary between the DSTs and the 242-A Evaporator has been designated at the outside of the 242-A building wall. Therefore, the permit modification information on the project to install new transfer lines was limited to those actions that will occur within the exterior building wall of the 242-A building.

   However, Ecology understands the public concern about the limits these administrative separations present. Ecology is working to ensure the fact sheet and presentations during the public comment period display the complex interactions between unit groups and the reasons for modifying the permit.

3. *High-Level Tank Waste: Ecology is working on including more comprehensive information provided in fact sheets and during public meetings. This will include discussions of the big picture how the facility supports immobilizing Hanford's high-level tank waste into glass.*

4. *Make a Long-Term Plan: United States Department of Energy (USDOE) produced a life-extension report, HNF-3327 Engineering Study for the 242-A Life Extension Upgrades for Fiscal Years 2010 Through 2052, Revision 2, for the 242-A Evaporator as well as performs periodic assessment of the tank systems integrity. Ecology will continue to monitor the facility and ensure it will work safely through its lifespan. These pipelines were identified in the report as necessary upgrades, and other upgrades have happened since the report was issued.*

I-5: SHANNON CRAM

Comment I-5-1

To Whom It May Concern,

Thank you for the opportunity to provide public comment on the Class Two Permit

Modification for the 242-A Evaporator. I am writing as a fifth generation Washingtonian who cares about protecting future generations from Hanford's Contamination.

I respectfully request that this permit modification ensures that requirements are in place to protect workers and the environment from the radioactivity and chemical toxins and toxic chemical vapors present in the waste that will be moved back and forth through the new transfer lines and 242-A Evaporator. I also request increased transparency on this issue as it was unclear to me from both the fact-sheet and public meeting materials that this action to drill three holes into the evaporator was being taken because the existing transfer lines for tank

waste were not safe. It was also unclear how important the evaporator is to tank waste treatment and that it is not currently operating. Share the details of the action AND the problems underpinning that action – like failing tank waste transfer pipes, and the timeline for fixing problems.

I ask that when you are soliciting input on anything that deals with treating

tank waste, you share the big picture of where the facility or action fits with immobilizing Hanford's high-level tank waste in glass. I also ask that you make and share the plan for how this aging facility will work safely for another 40 years.

Thank you for considering my comments about this important issue,

Shannon Cram

Response to I-5-1

Thank you for your comment. Ecology greatly appreciates your concern and ability to provide input.

1. *Safety: Ecology shares similar concerns about protecting workers and the environment. The 242-A Evaporator has extensive administrative and engineering controls in place to protect workers and the environment. The new wall penetrations and transfer lines will further increase safety during transfers by preventing further pipeline failures.*

   The Permittees have established procedures in place to address worker safety and chemical vapor protection that will be followed during construction. A comprehensive work planning process will be implemented and work packages will incorporate specific worker safety protocols for this project.

2. *Transparency: The new transfer lines are being installed because the existing lines are no longer fit-for-use. Installation of these new lines will be conducted once the permit modification is effective. Campaigns will resume once these new lines are installed, currently planned for 2022.*

   The Hanford permit has been administratively separated into unit groups. The boundary between the DSTs and the 242-A Evaporator has been designated at the outside of the 242-A building wall. Therefore, the permit modification information on the project to install new transfer lines was limited to those actions that will occur within the exterior building wall of the 242-A building.

   However, Ecology understands the public concern about the limits these administrative separations present. Ecology is working to ensure the fact sheet and presentations during the public comment period display the complex interactions between unit groups and the reasons for modifying the permit.

3. *High-Level Tank Waste: Ecology is working on including more comprehensive information provided in fact sheets and during public meetings. This will include discussions of the big picture how the facility supports immobilizing Hanford's high-level tank waste into glass.*

4. *Make a Long-Term Plan: United States Department of Energy (USDOE) produced a life-extension report, HNF-3327 Engineering Study for the 242-A Life Extension Upgrades for Fiscal Years 2010 Through 2052, Revision 2, for the 242-A Evaporator as well as performs periodic assessment of the tank systems integrity. Ecology will continue to monitor the facility and ensure it will work safely through its lifespan. These pipelines were identified in the report as necessary upgrades, and other upgrades have happened since the report was issued.*

I-6: CHRISTIAN SWENSON

Comment I-6-1

Sample Comments Prepared by Hanford Challenge

To Whom It May Concern,

Thank you for the opportunity to provide public comment on the Class Two Permit Modification for the 242-A Evaporator. I am writing because I care about efforts to protect human and environmental health and I believe in transparency and accountability.

Thank you for considering my comments:

• Prioritize Safety: Make sure requirements are in place to protect workers and the environment from the radioactivity and chemical toxins and toxic chemical vapors present in the waste that will be moved back and forth through the new transfer lines and 242-A Evaporator.

• Increase Transparency: It was unclear in the fact-sheet and public meeting materials provided for this comment period that this action to drill three holes into the evaporator was being taken because the existing transfer lines for tank waste were not safe. It was also unclear how important the evaporator is to tank waste treatment and that it is not currently operating. Share the details of the action AND the problems underpinning that action – like failing tank waste transfer pipes, and the timeline for fixing problems.

• Share the Big Picture: When you are soliciting input on anything that deals with treating tank waste, share the big picture of where the facility or action fits with immobilizing Hanford's high-level tank waste in glass.

• Make a Long-Term Plan: Make and share the plan for how this aging 43-year-old facility will safely work for another 40 years.

Sincerely,

Chris Swenson

Response to I-6-1

Thank you for your comment. Ecology greatly appreciates your concern and ability to provide input.

1. *Safety: Ecology shares similar concerns about protecting workers and the environment. The 242-A Evaporator has extensive administrative and engineering controls in place to*

protect workers and the environment. The new wall penetrations and transfer lines will further increase safety during transfers by preventing further pipeline failures.

The Permittees have established procedures in place to address worker safety and chemical vapor protection that will be followed during construction. A comprehensive work planning process will be implemented and work packages will incorporate specific worker safety protocols for this project.

2. *Transparency: The new transfer lines are being installed because the existing lines are no longer fit-for-use. Installation of these new lines will be conducted once the permit modification is effective. Campaigns will resume once these new lines are installed, currently planned for 2022.*

   The Hanford permit has been administratively separated into unit groups. The boundary between the DSTs and the 242-A Evaporator has been designated at the outside of the 242-A building wall. Therefore, the permit modification information on the project to install new transfer lines was limited to those actions that will occur within the exterior building wall of the 242-A building.

   However, Ecology understands the public concern about the limits these administrative separations present. Ecology is working to ensure the fact sheet and presentations during the public comment period display the complex interactions between unit groups and the reasons for modifying the permit.

3. *High-Level Tank Waste: Ecology is working on including more comprehensive information provided in fact sheets and during public meetings. This will include discussions of the big picture how the facility supports immobilizing Hanford's high-level tank waste into glass.*

4. *Make a Long-Term Plan: United States Department of Energy (USDOE) produced a life-extension report, HNF-3327 Engineering Study for the 242-A Life Extension Upgrades for Fiscal Years 2010 Through 2052, Revision 2, for the 242-A Evaporator as well as performs periodic assessment of the tank systems integrity. Ecology will continue to monitor the facility and ensure it will work safely through its lifespan. These pipelines were identified in the report as necessary upgrades, and other upgrades have happened since the report was issued.*

I-7: STEVEN GARY

Comment I-7-1

To Whom It May Concern,

Thank you for the opportunity to provide public comment on the Class Two Permit Modification for the 242-A Evaporator. I am writing because I care about efforts to protect human and environmental health and I believe in transparency and accountability.

Thank you for considering my comments:

• Prioritize Safety: Make sure requirements are in place to protect workers and the environment from the radioactivity and chemical toxins and toxic chemical vapors present in the waste that will be moved back and forth through the new transfer lines and 242-A Evaporator.

• Increase Transparency: It was unclear in the fact-sheet and public meeting materials provided for this comment period that this action to drill three holes into the evaporator was being taken because the existing transfer lines for tank waste were not safe. It was also unclear how important the evaporator is to tank waste treatment and that it is not currently operating. Share the details of the action AND the problems underpinning that action – like failing tank waste transfer pipes, and the timeline for fixing problems.

• Share the Big Picture: When you are soliciting input on anything that deals with treating tank waste, share the big picture of where the facility or action fits with immobilizing Hanford's high-level tank waste in glass.

• Make a Long-Term Plan: Make and share the plan for how this aging 43-year-old facility will safely work for another 40 years.

Sincerely, Steven Gary

Response to I-7-1

Thank you for your comment. Ecology greatly appreciates your concern and ability to provide input.

1. *Safety: Ecology shares similar concerns about protecting workers and the environment. The 242-A Evaporator has extensive administrative and engineering controls in place to protect workers and the environment. The new wall penetrations and transfer lines will further increase safety during transfers by preventing further pipeline failures.*

   The Permittees have established procedures in place to address worker safety and chemical vapor protection that will be followed during construction. A comprehensive work planning process will be implemented and work packages will incorporate specific worker safety protocols for this project.

2. *Transparency: The new transfer lines are being installed because the existing lines are no longer fit-for-use. Installation of these new lines will be conducted once the permit modification is effective. Campaigns will resume once these new lines are installed, currently planned for 2022.*

   The Hanford permit has been administratively separated into unit groups. The boundary between the DSTs and the 242-A Evaporator has been designated at the outside of the 242-A building wall. Therefore, the permit modification information on the project to install new transfer lines was limited to those actions that will occur within the exterior building wall of the 242-A building.

   However, Ecology understands the public concern about the limits these administrative separations present. Ecology is working to ensure the fact sheet and presentations

during the public comment period display the complex interactions between unit groups and the reasons for modifying the permit.

3. *High-Level Tank Waste: Ecology is working on including more comprehensive information provided in fact sheets and during public meetings. This will include discussions of the big picture how the facility supports immobilizing Hanford's high-level tank waste into glass.*
4. *Make a Long-Term Plan: United States Department of Energy (USDOE) produced a life-extension report, HNF-3327 Engineering Study for the 242-A Life Extension Upgrades for Fiscal Years 2010 Through 2052, Revision 2, for the 242-A Evaporator as well as performs periodic assessment of the tank systems integrity. Ecology will continue to monitor the facility and ensure it will work safely through its lifespan. These pipelines were identified in the report as necessary upgrades, and other upgrades have happened since the report was issued.*

I-8: KAITLIN MCCARTHY

Comment I-8-1

Please prioritize safety by making sure requirements are in place to protect workers and the environment from the radioactive waste and toxic chemical vapors present in the waste that will be moved back and forth through the new transfer lines and evaporator.

It was unclear in the fact-sheet and public meeting materials provided for this comment period that this action was being taken because the existing transfer lines for tank waste were not safe. It was also unclear how important the evaporator is to tank waste treatment. Please increase transparency and share the details of the action AND the other problems underpinning that action - like failing tank waste transfer pipes - and the timeline for fixing problems.

Please share the big picture. How will this aging 43 year old facility safely work for another 40 years?

Response to I-8-1

Thank you for your comment. Ecology greatly appreciates your concern and ability to provide input.

1. *Safety: Ecology shares similar concerns about protecting workers and the environment. The 242-A Evaporator has extensive administrative and engineering controls in place to protect workers and the environment. The new wall penetrations and transfer lines will further increase safety during transfers by preventing further pipeline failures.*

   The Permittees have established procedures in place to address worker safety and chemical vapor protection that will be followed during construction. A comprehensive work planning process will be implemented and work packages will incorporate specific worker safety protocols for this project.

2. *Transparency: The new transfer lines are being installed because the existing lines are no longer fit-for-use. Installation of these new lines will be conducted once the permit*

modification is effective. Campaigns will resume once these new lines are installed, currently planned for 2022.

The Hanford permit has been administratively separated into unit groups. The boundary between the DSTs and the 242-A Evaporator has been designated at the outside of the 242-A building wall. Therefore, the permit modification information on the project to install new transfer lines was limited to those actions that will occur within the exterior building wall of the 242-A building.

However, Ecology understands the public concern about the limits these administrative separations present. Ecology is working to ensure the fact sheet and presentations during the public comment period display the complex interactions between unit groups and the reasons for modifying the permit.

3. *High-Level Tank Waste: Ecology is working on including more comprehensive information provided in fact sheets and during public meetings. This will include discussions of the big picture how the facility supports immobilizing Hanford's high-level tank waste into glass.*
4. *Make a Long-Term Plan: United States Department of Energy (USDOE) produced a life-extension report, HNF-3327 Engineering Study for the 242-A Life Extension Upgrades for Fiscal Years 2010 Through 2052, Revision 2, for the 242-A Evaporator as well as performs periodic assessment of the tank systems integrity. Ecology will continue to monitor the facility and ensure it will work safely through its lifespan. These pipelines were identified in the report as necessary upgrades, and other upgrades have happened since the report was issued.*

I-9: HEATHER BERG

Comment I-9-1

Please explain the SPECIFICS of what is happening. Please share specifics of other probable and known health issues that are not being discussed openly. We want OUTSIDE testing from 3 agencies. DoE chooses one, a neutral agency and an anti-nuclear waste testing group that has a history of accurate testing. The DOE is responsible for earning our trust back regarding the Hanford site and others.

Response to I-9-1

Thank you for your comment.

New transfer lines from the AW Double-Shell Tank Farm to the 242-A Evaporator are being constructed, following failed encasement pressure tests in 2018. These tests indicated a potential for waste to enter the secondary containment. According to Washington Administrative Code WAC 173-303-640(7), unfit-for-use tank system components must be repaired and recertified or closed. Since the extent and location of the deterioration could not be determined, the United States Department of Energy chose to construct new transfer lines.

This project requires modifications to the 242-A Evaporator building to accept the new transfer lines. This permit modification is to document those changes in the permit.

Agency roles are not in the scope of this permit modification. Ecology's role as an oversight agency is to ensure the permit material satisfies all applicable WAC 173-303 regulations.

I-10: HARRY

Comment I-10-1

Thank you for the opportunity to comment.

Please do the work safely, protecting workers.

Next time, please include the reason why the action is being taken, e.g. the existing lines are not safe because...

Response to I-10-1

Thank you for your comment.

Ecology is determined to ensure the clean up of Hanford is done with human health and environmental safety in mind. The Permittees have established procedures in place to address worker safety and chemical vapor protection that will be followed during construction. A comprehensive work planning process will be implemented and work packages will incorporate specific worker safety protocols for this project.

New transfer lines from the AW Double-Shell Tank Farm to the 242-A Evaporator are being constructed, following failed encasement pressure tests in 2018. These tests indicated a potential for waste to enter the secondary containment. According to Washington Administrative Code WAC 173-303-640(7), unfit-for-use tank system components must be repaired and recertified or closed. Since the extent and location of the deterioration could not be determined, the United States Department of Energy chose to construct new transfer lines.

Ecology is also working with the Department of Energy to ensure fact sheets and public meetings contain more comprehensive information on the reason for modifying the permit.

I-11: BECCA HALL

Comment I-11-1

To Whom It May Concern,Thank you for the opportunity to provide public comment on the Class Two Permit Modification for the 242-A Evaporator. I am writing because I care about efforts to protect human and environmental health and I believe in transparency and accountability. Thank you for considering my comments:•Prioritize Safety: Make sure requirements are in place to protect workers and the environment from the radioactivity and chemical toxins and toxic chemical vapors present in the waste that will be moved back and forth through the new transfer lines and 242-A Evaporator.•Increase Transparency: It was unclear in the fact-sheet and public meeting materials provided for this comment period that this action to drill three holes into the evaporatorwas being taken because the existing transfer

lines for tank waste were not safe. It was also unclear how important the evaporator is to tank waste treatment and that it is not currently operating. Share the details of the action AND the problems underpinning that action – like failing tank waste transfer pipes, and the timeline for fixing problems.•Share the Big Picture: When you are soliciting input on anything that deals with treating tank waste, share the big picture of where the facility or action fits with immobilizing Hanford's high-level tank waste in glass.•Make a Long-Term Plan: Make and share the plan for how this aging 43-year-old facility will safely work for another 40 years.Sincerely,Becca Hall

Response to I-11-1

Thank you for your comment. Ecology greatly appreciates your concern and ability to provide input.

1. *Safety: Ecology shares similar concerns about protecting workers and the environment. The 242-A Evaporator has extensive administrative and engineering controls in place to protect workers and the environment. The new wall penetrations and transfer lines will further increase safety during transfers by preventing further pipeline failures.*

   The Permittees have established procedures in place to address worker safety and chemical vapor protection that will be followed during construction. A comprehensive work planning process will be implemented and work packages will incorporate specific worker safety protocols for this project.

2. *Transparency: The new transfer lines are being installed because the existing lines are no longer fit-for-use. Installation of these new lines will be conducted once the permit modification is effective. Campaigns will resume once these new lines are installed, currently planned for 2022.*

   The Hanford permit has been administratively separated into unit groups. The boundary between the DSTs and the 242-A Evaporator has been designated at the outside of the 242-A building wall. Therefore, the permit modification information on the project to install new transfer lines was limited to those actions that will occur within the exterior building wall of the 242-A building.

   However, Ecology understands the public concern about the limits these administrative separations present. Ecology is working to ensure the fact sheet and presentations during the public comment period display the complex interactions between unit groups and the reasons for modifying the permit.

3. *High-Level Tank Waste: Ecology is working on including more comprehensive information provided in fact sheets and during public meetings. This will include discussions of the big picture how the facility supports immobilizing Hanford's high-level tank waste into glass.*

4. *Make a Long-Term Plan: United States Department of Energy (USDOE) produced a life-extension report, HNF-3327 Engineering Study for the 242-A Life Extension Upgrades for Fiscal Years 2010 Through 2052, Revision 2, for the 242-A Evaporator as well as performs periodic assessment of the tank systems integrity. Ecology will continue to monitor the*

facility and ensure it will work safely through its lifespan. These pipelines were identified in the report as necessary upgrades, and other upgrades have happened since the report was issued.

O-1: HANFORD CHALLENGE

Comment O-1-1

To Whom It May Concern,

Thank you for the opportunity to submit comments on the 242-A Evaporator Class 2 Permit Modification for Three New Wall Penetrations in the 242-A Evaporator Facility.

Hanford Challenge is a non-profit, public interest, environmental and worker advocacy organization located at 2719 East Madison Street, Suite 304, Seattle, WA 98112. Hanford Challenge is an independent 501(c)(3) membership organization incorporated in the State of Washington with a mission to create a future for the Hanford Nuclear Site that secures human health and safety, advances accountability, and promotes a sustainable environmental legacy. Hanford Challenge has members who work at the Hanford Site. Other members of Hanford Challenge work and/or recreate near Hanford, where they may also be affected by hazardous materials emitted into the environment by Hanford. All members have a strong interest in ensuring the safe and effective cleanup of the nation's most toxic nuclear site for themselves and for current and future generations, and who are therefore affected by conditions that endanger human health and the environment.

As the Hanford site ages, we can expect Hanford site facilities to fail and need upgrades and replacements. The 242-A Evaporator is one of the facilities that concerns Hanford Challenge. It will be needed for at least 40 more years to concentrate tank waste as part of the tank waste treatment mission and it is already 43 years old. The safe and effective storage of Hanford's high-level tank waste is essential to the protection of human health and the environment as we wait for safe immobilization of Hanford's high-level tank waste in glass.

-Increase Transparency and Clarity in Communications: We appreciate efforts to install new transfer lines to the 242-A Evaporator to increase safety following the failed pneumatic pressure test for SL-167 in 2018 and signs of corrosion in SL-168, however this work/rationale was not front and center in the materials provided for the 242-A Permit Modification for the three new wall penetrations for these new transfer lines. Permit Modifications are notoriously inaccessible to the public, but this does not need to be the case. In future permit modification public materials like fact sheets and presentations use plain language to clearly communicate why an action is being taken and how it fits into the bigger picture of ultimate Hanford cleanup goals.

-Make Relevant Documents Easier to Navigate: In the future, please provide a summary of which documents are included in a permit modification package for ease of navigation. The 2,046 page permit modification package for 242-A would have been easier to navigate had the page numbers been available, or a separate link for each document included in the package. The presentation provided at the public meeting was also not available on the Hanford.gov

website until it was requested. Please make sure these materials are available and accessible in an easy to navigate format online.

-Include Chemical Vapor Protections: Make sure to include requirements that protect workers from chemical vapor exposure at the 242-A evaporator. This is a legal requirement under existing environmental, health and safety laws, as well as a commitment made by the DOE and contractors in recent legal resolutions.

-Make a Long-Term Plan for the Work of Evaporating Tank Waste: Hanford Challenge would like to see the Department of Energy make plans or provide plans already in place to ensure the work of the 242-A Evaporator continues safely over the next 40+ years that it will be needed to make space in the tanks, during the tank waste treatment mission. Assess the cost of repairs and upgrades as well as the cost of building a new evaporator.

Thank you for considering our comments.

Response to O-1-1

Thank you for your comment. Ecology greatly appreciates your concern and ability to provide input.

1. *Safety: Ecology shares similar concerns about protecting workers and the environment. The 242-A Evaporator has extensive administrative and engineering controls in place to protect workers and the environment. The new wall penetrations and transfer lines will further increase safety during transfers by preventing further pipeline failures.*

   The Permittees have established procedures in place to address worker safety and chemical vapor protection that will be followed during construction. A comprehensive work planning process will be implemented and work packages will incorporate specific worker safety protocols for this project.

2. *Transparency: The new transfer lines are being installed because the existing lines are no longer fit-for-use. Installation of these new lines will be conducted once the permit modification is effective. Campaigns will resume once these new lines are installed, currently planned for 2022.*

   The Hanford permit has been administratively separated into unit groups. The boundary between the DSTs and the 242-A Evaporator has been designated at the outside of the 242-A building wall. Therefore, the permit modification information on the project to install new transfer lines was limited to those actions that will occur within the exterior building wall of the 242-A building.

   However, Ecology understands the public concern about the limits these administrative separations present. Ecology is working to ensure the fact sheet and presentations during the public comment period display the complex interactions between unit groups and the reasons for modifying the permit.

3. *High-Level Tank Waste: Ecology is working on including more comprehensive information provided in fact sheets and during public meetings. This will include*

discussions of the big picture how the facility supports immobilizing Hanford's high-level tank waste into glass.

4. *Make a Long-Term Plan: United States Department of Energy (USDOE) produced a life-extension report, HNF-3327 Engineering Study for the 242-A Life Extension Upgrades for Fiscal Years 2010 Through 2052, Revision 2, for the 242-A Evaporator as well as performs periodic assessment of the tank systems integrity. Ecology will continue to monitor the facility and ensure it will work safely through its lifespan. These pipelines were identified in the report as necessary upgrades, and other upgrades have happened since the report was issued.*

OTH-1

Comment OTH-1-1

The problem that contractors are faced with developing a path forward should have been stated as the "why" in the fact sheet and public meeting. The evaporator is key to safe reliable tank waste management and tank waste treatment. A weak link if not funded properly to allow a long term solution. A risk to the goals of safe uninterrupted tank waste treatment. DOE needs to be held to account to fund proper engineering design and operations with redundancy to insure success and worker protection. Look at the evaporator schedules for treatment and what is in the queue. Is it set up to be successful for all its missions? Short term actions to react to transfer line issues open the opportunity for DOE to openly and with transparency show the public how big this challenge is and how the evaporator without redundancy and a multi-decade plan can impact the big picture goal.

Fee for contractors, proper funding from DOE, and state and federal regulatory requirements drive the schedule together along with the public getting behind solutions.

Response to OTH-1-1

Thank you for your comment.

Ecology is working to ensure the fact sheet and presentations during the public comment period display the complex interactions between unit groups and the reasons for modifying the permit.

Ecology agrees that proper funding and planning is necessary to achieve the big picture cleanup activities. The 242-A Evaporator will continue to provide Double Shell Tank volume reduction to facilitate Single Shell Tank retrievals. Ecology and the permittees work collaboratively to ensure schedules and deadlines are met to ensure success of tank waste treatment and disposal. Every three years DOE collaborates with Ecology to prepare a detailed system plan for the full tank waste treatment mission. This plan includes Evaporator operations that ensure DOE has adequate information for future Evaporator campaigns.

Appendix A. Copies of All Public Notices

Public notices for this comment period:

- Fact sheet
- Classified advertisement in the Tri-City Herald
- Notices sent to the Hanford-Info email list

PUBLIC COMMENT PERIOD

Class 2 Permit Modification for the Installation of New Wall Penetrations to the 242-A Evaporator

Fact Sheet

GET INVOLVED

Comment Period
May 8 – July 7, 2020

Virtual Public Meeting
June 8, 5:30 p.m.
(see page 3 for details)

Send comments by July 7, 2020 to
http://nw.ecology.commentinput.com/?id=HuitW

Administrative Record:
https://go.usa.gov/xdzgP

Contact Information

Jennifer Colborn
(509) 376-5840
Jennifer_M_Colborn@rl.gov

Daina McFadden, Ecology
(509) 372-7950
Hanford@ecy.wa.gov

The 242 A Evaporator facility is a vital facility for managing waste tank space.

The U.S. Department of Energy (DOE) is holding a 60-day public comment period on a proposed Class 2 modification to the Hanford Dangerous Waste Permit. This proposed permit modification would allow the installation of three wall penetrations to connect three new double-shell tank transfer lines to the 242-A Evaporator facility.

Background

The Hanford Site is located in southeastern Washington state along the Columbia River. The 580-square-mile site was created in 1943 as part of the Manhattan Project to produce plutonium for the nation's defense program. Today, waste management and environmental cleanup are the main missions at Hanford.

The DOE and its contractor Washington River Protection Solutions are requesting a Class 2 permit modification to the 242-A Evaporator chapter of the Hanford Dangerous Waste Permit. The 242-A Evaporator facility is a mixed-waste treatment and storage unit that concentrates the liquid portion of double-shell tank waste. The facility is located in the 200 East Area of the Hanford Site (see map).

Public Comment Period for Class 2 Permit Modification for the Installation of New Wall penetrations in the 242-A Evaporator Facility

Overview

The Hanford Dangerous Waste Permit establishes requirements to ensure that waste management activities protect human health and the environment. DOE is proposing a Class 2 permit modification pursuant to WAC 173-303-830, which requires a 60-day comment period, a public meeting, a newspaper notice, and a mailing list notice. This fact sheet is the mailing notice.

Summary of Changes

If approved, the modification would allow DOE to install three wall penetrations and nozzle encasements connecting three new double-shell tank transfer lines to the 242-A Evaporator facility. The permit language regarding variances for existing facility wall penetrations will be amended to reflect the new configurations.

Permit Chapters Affected by this Modification

- Permit Conditions
- Chapter 4, Process Information

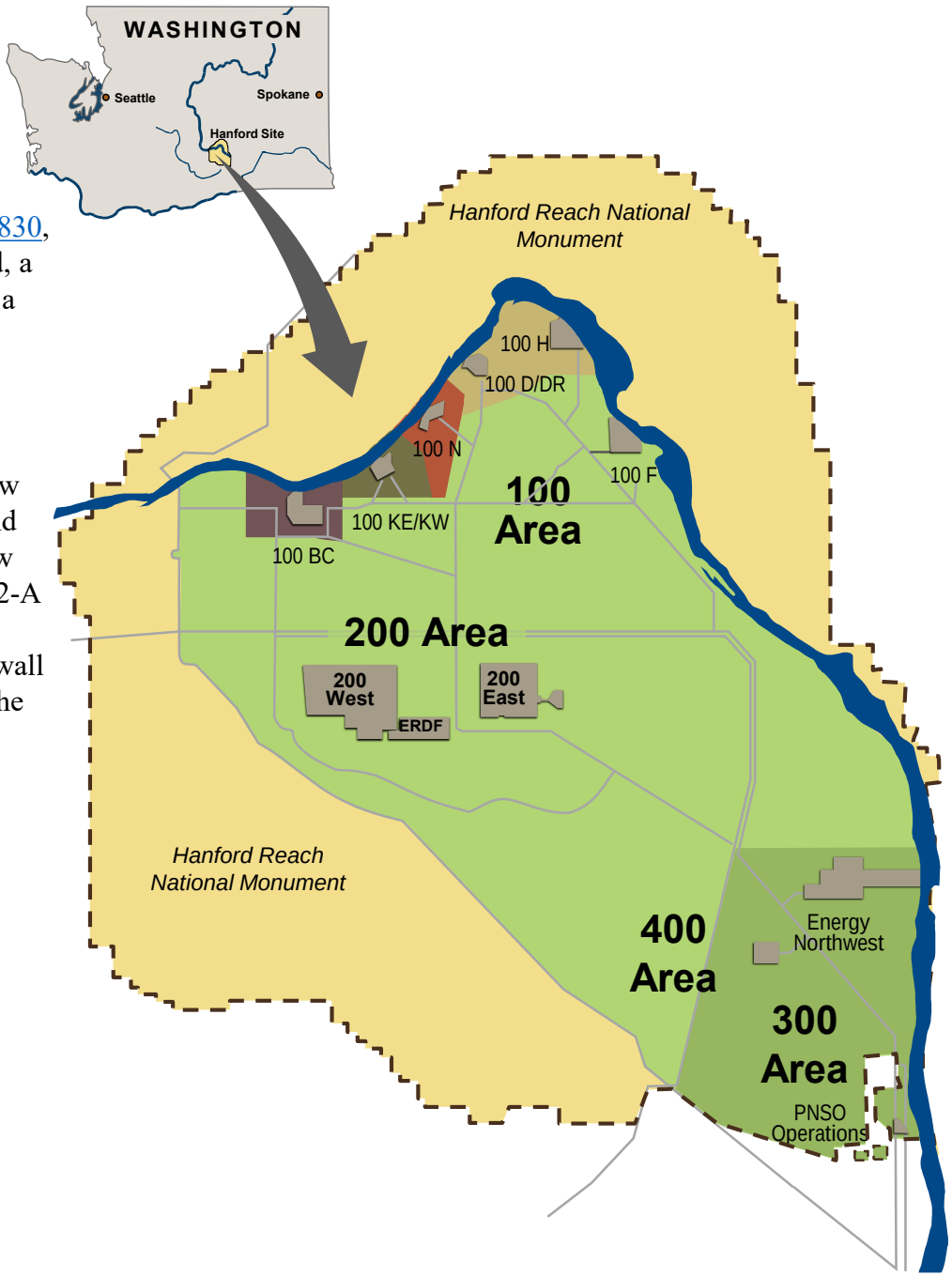

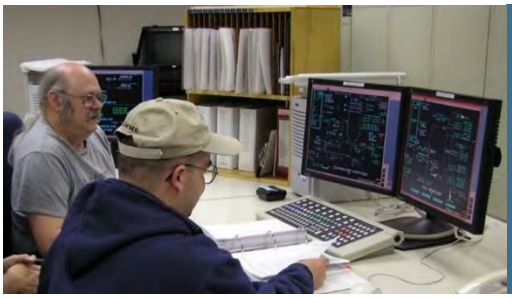

The 242 A Evaporator facility is monitored closely by the operations staff in the Evaporator Control Room.

242 A Evaporator facility at night

Public Comment Period for Class 2 Permit Modification for the Installation of New Wall penetrations in the 242-A Evaporator Facility

Public Involvement

A 60-day public comment period will begin May 8, 2020, and continue through July 7. A public meeting will be held June 8, at 5:30 p.m. To participate via GoToWebinar, please follow the instructions below:

Visual:
Click the GoToWebinar link: https://attendee.gotowebinar.com/register/1205093736545583884;
ID #: 850-426-035

Audio (please mute your phone):
1. Dial: +1 509-931-1284
2. Enter in the Conference ID: 179286641#

All comments must be submitted by July 7 in writing by mail or electronically (preferred) to:

Washington State Department of Ecology
3100 Port of Benton Boulevard
Richland, WA 99354
http://nw.ecology.commentinput.com/?id=HuitW (preferred)

At the conclusion of the public comment period, the Washington State Department of Ecology will address public comments and prepare a Response to Comment document.

Copies of the proposed plan and supporting documentation will be available online during the public comment period in the Administrative Record at https://go.usa.gov/xdzgP. Hanford Public Information Repository locations are listed at https://go.usa.gov/xVDTS.

The permittee's compliance history during the life of the permit being modified is available from the Washington Department of Ecology contact person.

Please contact Jennifer Colborn, Jennifer_M_Colborn@rl.gov, (509) 376-5840 at least 10 working days prior to the event to request disability accommodation. DOE makes every effort to honor disability accommodation requests.

Jennifer Colborn
P.O. Box 450, H6-60
Richland, WA 99352

Daina McFadden, Ecology
3100 Port of Benton Boulevard
Richland, WA 99354

Public Involvement Opportunity

We want to hear from you on the proposed changes in the 242-A Evaporator facility chapter of the Hanford Dangerous Waste Permit

Comment Period:

May 8 – July 7, 2020

Public Meeting: June 8, 5:30 p.m. (see page 3 for details)

Class 2 Permit Modification Fact Sheet
U.S. Department of Energy
P.O. Box 450, H6-60
Richland, WA 99352

Inslee gives OK to drive-in religious services

BY JAMES DREW
jdrew@thenewstribune.com

OLYMPIA

Gov. Jay Inslee released rules Wednesday afternoon that will allow religious, spiritual and faith-based organizations to conduct drive-in services.

"Faith is so important at all times, but especially during times of crisis and difficulty. This unique drive-in service option will allow people to come together," Inslee said in a written statement. "Our goal has always been to keep Washingtonians safe and healthy, and this option allows them to do that while participating in religious, spiritual and faith-based activities."

The guidance is part of the governor's first phase in loosening restrictions that have been in place since late March to combat the spread of the new coronavirus. Inslee's stay-at-home order runs through May 31.

Here are the rules for attendees of drive-in services:

- All persons attending the service must drive up in an enclosed vehicle and remain in that same vehicle during the entire service. Individuals should not get out of their vehicle during the service for any reason.
- Vehicle windows, sunroofs and convertible tops must remain closed during the entire service, unless the vehicle is parked more than 6 feet from any other vehicle.
- No more than 10 people may be in a single vehicle.
- Each vehicle may be occupied only by members of the same household who have already been in close contact with each other and are not sick.

Here are the rules for employees of the faith-based organization:

- All employees and employers must follow current state Department of Health, Labor and Industries, and Centers for Disease Control and Prevention guidelines.
- If it is necessary to collect a physical offering, the organizer may use a drop-box, while vehicles are entering or leaving the service, provided that vehicles and individuals remain at all times at least 6 feet apart. Accepting online donations is the best practice.
- No food or beverages or other materials (whether for religious or secular purpose) may be distributed or collected before, after, or as part of the service. This includes communion wafers or bread and wine or juices, Inslee spokesman Mike Faulk confirmed.

"Food and beverage, especially if they are in containers that are passed around in the same containers, being touched and breathed on by numerous individuals, or even handed to people at close proximity could help transmit the virus," he said.

"For example, I've been to services where they make you stick your tongue out and put the bread/cracker directly on your tongue. Some I've been to have everyone drink out of the same big silver goblet. Probably not a good idea in the time of COVID. Again, there may be ways to mitigate potential spread, but it would require additional guidance and would probably be tricky to deny," he said in an email.

The governor's office also released a six-page guidance memo Wednesday for reopening auto and vessel sales. Information on that can be found on the governor's website.

JOSHUA L. JONES AP

Pastor Lance Brooks leads the worship band during a drive-in outdoor church service at Cornerstone Church in Athens, Georgia, on April 26.

NO MORE THAN 10 PEOPLE MAY BE IN A SINGLE VEHICLE.

DEATH NOTICES

BEATRIZ B. ROBLEDO

Beatriz Barrueta Robledo, 63, of Kennewick, died May 6, in Kennewick.

She was born in Mexico City, and lived in the Tri-Cities for 15 years.

She was the owner of Donitas Tacos in Pasco.

Mueller's Tri-Cities Funeral Home, Kennewick, is in charge of arrangements.

ROBERT HACKWITH

Robert Hackwith, 86, of Kennewick, died May 5 in Sunnyside.

He was born in Fort Monroe, Va., and lived in the Tri-Cities for 75 years.

He was a retired land surveyor for R.L. Hackwith Surveying PLS.

Mueller's Tri-Cities Funeral Home, Kennewick, is in charge of arrangements.

RAUL E. JASSO

Raul E. Jasso, 79, of Grandview, died May 5 in Sunnyside.

He was born in Nueva Rosita, Coahuila, Mexico, and was a longtime Lower Yakima Valley resident.

He was a retired farmer.

Smith Funeral Home, Grandview, is in charge of arrangements.

LOLA M. BERGLIN

Lola Marie Berglin, 87, of Burbank, died May 3 in Richland.

She was born in Walla Walla and lived in Burbank for 26 years.

She was a homemaker.

Mueller's Tri-Cities Funeral Home, Kennewick, is in charge of arrangements.

MARK R. SMITH

Mark R. Smith, 68, of Kennewick, died May 5 in Kennewick.

He was born in Richland and lived in Kennewick for 68 years.

He was a retired boiler technician at Hanford.

Mueller's Tri-Cities Funeral Home, Kennewick, is in charge of arrangements.

JOE D. JACKSON SR.

Joe Donald Jackson Sr., 84, of Kennewick, died April 26 in Pasco.

He was born in Miami, Okla., and lived in Kennewick for 59 years.

He was the retired owner of a travel agency.

Mueller's Tri-Cities Funeral Home, Kennewick, is in charge of arrangements.

MYRNA FORESTER

Myrna Forester, 66, of Richland, died May 3 at home in Richland.

She was born in Jamestown, N.D., and lived in Richland since 1978.

She was a retired clinical information manager at Kadlec Regional Medical Center.

Einan's at Sunset, Richland, is in charge of arrangements.

DEBORAH STRINE

Deborah Strine, 68, of Richland, died May 2 at Kadlec Regional Medical Center in Richland.

She was born in Rochester, N.Y., and lived in the Richland for 34 years.

She was a retired administrator for Con Agra.

Einan's at Sunset, Richland, is in charge of arrangements.

JEFFREY D. HANAN

Jeffrey Dean Hanan, 65, of Pasco, died May 5 at Harborview Medical Center in Seattle.

He was born in Wenatchee, and lived in the Tri-Cities since 1967.

He was a teacher in the Pasco School District.

Life Tributes Cremation Center, Kennewick, is in charge of arrangements.

PAT SANDERS

Pat Sanders, 90, of Kennewick, died May 6 in Kennewick.

He was born in Tulia, Texas, and lived in the Tri-Cities for 83 years.

He was a retired ironworker.

Mueller's Tri-Cities Funeral Home, Kennewick, is in charge of arrangements.

THE HANFORD SITE

Learn About a Permit Modification for New Wall Penetrations at the 242-A Evaporator Facility

PUBLIC COMMENT PERIOD: May 8 to July 7, 2020

The U.S. Department of Energy is holding a 60-day public comment period on a proposed Class 2 modification to the Hanford Dangerous Waste Permit. This proposed permit modification would allow for three new wall penetrations in the 242-A Evaporator facility to connect three new double-shell tank transfer lines.

A public meeting will be held June 8, at 5:30 p.m. To participate via GoToWebinar, please follow the instructions below:

Visual:
Click the GoToWebinar link:
https://attendee.gotowebinar.com/register/1205093736545583884;
ID #: 850-426-035

Audio (please mute your phone):
1. Dial: +1 509-931-1284
2. Enter in the Conference ID: 179286641#

Visit https://go.usa.gov/xdzgP to review details on these proposed changes. All comments must be submitted by July 7, 2020, in writing by mail or electronically to:

Washington State Department of Ecology
3100 Port of Benton Boulevard
Richland, WA 99354
eComments (preferred): http://nw.ecology.commentinput.com/?id=HuitW

Questions? Please contact Jennifer Colborn at Jennifer_M_Colborn@rl.gov, or Daina McFadden, Washington State Department of Ecology, at Hanford@ecy.wa.gov.

The permittee's compliance history during the life of the permit being modified is available from the Washington State Department of Ecology contact person. To request disability accommodation, please contact Jennifer Colborn, jennifer_m_colborn@rl.gov, 509-376-5840 at least 10 working days prior to the event.

Learn more about Hanford cleanup at www.hanford.gov

From:	^TPA
To:	HANFORD-INFO@LISTSERV.ECOLOGY.WA.GOV
Subject:	Public Comment Period on Proposed Changes to the Hanford Dangerous Waste Permit
Date:	Friday, May 8, 2020 9:41:02 AM
Attachments:	image003.png 242-A Evaporator_Fact Sheet_FINAL_5-6-2020.pdf

THE HANFORD SITE

This is a message from the U.S. Department of Energy

Public Comment Period on Proposed Changes to the Hanford Dangerous Waste Permit

The U.S. Department of Energy is holding a 60-day public comment period on a proposed Class 2 modification to the Hanford Dangerous Waste Permit. This proposed permit modification would allow for three new wall penetrations in the 242-A Evaporator facility to connect three new double-shell tank transfer lines.

The comment period is from May 8 to July 7, 2020.

A public meeting will be held June 8, at 5:30 p.m. To participate via GoToWebinar, please follow the instructions below:

Visual:
Click the GoToWebinar link:
https://attendee.gotowebinar.com/register/1205093736545583884;
ID #: 850-426-035

Audio (please mute your phone):
1. Dial: +1 509-931-1284
2. Enter in the Conference ID: 179286641#

Copies of the proposed modification and supporting documentation will be available online during the comment period in the Hanford Administrative Record, on the Washington State Department of Ecology's website, and at the Hanford Public Information Repositories. A summary fact sheet is attached to this message and posted online.

Please submit any comments electronically (preferred) or by mail by **July 7** to:

Washington State Department of Ecology
3100 Port of Benton Boulevard
Richland, Washington 99354

Questions? Please contact Jennifer Colborn at Jennifer_M_Colborn@rl.gov, or Daina McFadden, Washington State Department of Ecology, at Hanford@ecy.wa.gov.

The permittee's compliance history during the life of the permit being modified is available from the Washington State Department of Ecology contact person.

To request disability accommodation, please contact Jennifer Colborn, jennifer_m_colborn@rl.gov, 509-376-5840

at least 10 working days prior to the event. DOE makes every effort to honor disability accommodation requests.

Ecology logo

Visit us on the web and follow our news and social media.

Subscribe or Unsubscribe

From:	^TPA
To:	HANFORD-INFO@LISTSERV.ECOLOGY.WA.GOV
Subject:	Upcoming comment period on proposed changes to the Hanford Dangerous Waste Permit
Date:	Monday, March 9, 2020 3:45:20 PM
Attachments:	image002.png

THE HANFORD SITE

This is a message from the U.S. Department of Energy

Notice of Upcoming Public Comment Period on Proposed Changes to the Hanford Dangerous Waste Permit

The U.S. Department of Energy is planning a 60-day public comment period on a proposed modification to the Hanford Dangerous Waste Permit. This proposed Class 2 permit modification is required to install three new transfer lines to the 242-A Evaporator. Permit language regarding variances for existing 242-A components will be amended to reflect the new configurations.

The comment period is expected to begin in early April with a public meeting in May.

The proposed modification and supporting documentation will be available online during the public comment period at the Hanford events calendar, the Hanford Administrative Record, and at the Hanford Public Information Repositories.

A summary fact sheet and details of the public meeting will be provided when the comment period begins.

Questions? Please contact Jennifer Colborn, Mission Support Alliance, at Jennifer_M_colborn@rl.gov, or Daina McFadden, Washington State Department of Ecology, at Hanford@ecy.wa.gov.

Ecology logo

Visit us on the web and follow our news and social media.

Subscribe or Unsubscribe

ENGINEERING CHANGE NOTICE

Prepared For the U.S. Department of Energy, Assistant Secretary for Environmental Management
By Washington River Protection Solutions, LLC., PO Box 850, Richland, WA 99352
Contractor For U.S. Department of Energy, Office of River Protection, under Contract DE-AC27-08RV14800

TRADEMARK DISCLAIMER: Reference herein to any specific commercial product, process, or service by trade name, trademark, manufacturer, or otherwise, does not necessarily constitute or imply its endorsement, recommendation, or favoring by the United States government or any agency thereof or its contractors or subcontractors. Printed in the United States of America.

Release Stamp

DATE: Mar 31,2020 HANFORD RELEASE

1a. **ECN No:** ECN-715003 **Rev.** 01	1b. **Project Number:** T1P207 ☐N/A
2. **Title:** 242-A EVAPORATOR PUMP ROOM JUMPER REMOVAL	
3. **WA or Redline ECN:** ☐ WA ☐ REDLINE ☒ N/A	4. **Temporary Modification:** ☐ Yes ☒ No
5. **Design Type:** I	6. **Design Verification Required:** ☒Yes ☐No
7. **Safety Classification:** ☐SC ☐SS ☒GS ☐N/A	
8. **USQ Number:** EV-19-2032-D, Rev. 1 ☐ N/A	9. **PrHA Number** PrHA-57384 **Rev.** 00 ☐ N/A

Workflow Approval Status: Submitted for USQ
Clearance Review Restriction Type: undefined

10. **Trend Codes**

Cause	Commodity	Discipline Driver
Customer Initiated Changes	Mechanical Equipment	Mechanical

11. **Design Authority Designator**

PRJ - 242-A TRANSFER LINE REPLACEMENT PROJECT

12. **Approvals**

Title	Name	Signature	Date
Design Authority	Engeman, Jason K	*Engeman, Jason K*	03/26/2020
Design Verifier	Harrington, James P	*Harrington, James P*	02/07/2020
Checker	Harrington, James P	*Harrington, James P*	02/07/2020
Document Control Approval	Meinecke, Kathryn R	*Meinecke, Kathryn R*	03/31/2020
Environmental Protection	Heninger, Steve D	*Heninger, Steve D*	02/10/2020
Originator	Lang, Ryan D	*Lang, Ryan D*	02/07/2020
Other Approver	Balint, Greg G	*Balint, Greg G*	03/25/2020
PrHA Lead	Kozlowski, Stephen D	*Kozlowski, Stephen D*	03/26/2020
Radiological Control	Franz, James A	*Franz, James A*	02/27/2020
Responsible Engineering Manager	Huntington, Matthew R	*Huntington, Matthew R*	03/30/2020
USQ Evaluator	Carlstrom, Richard	*Carlstrom, Richard*	03/30/2020
Waste Transfer Engineering	Moss, Hannah C	*Moss, Hannah C*	03/23/2020

13. **Problem**

ECN-715003 was revised to add 242-A Evaporator design authority approval, and clarify the as found configuration of blanks on nozzles 17 and 18.

Recent pneumatic testing on the encasement of SL-167 has determined that it cannot maintain pressure, and therefore cannot be used to compliantly transfer waste. Recent visual inspection of SL-168 (the back-up slurry line) and pneumatic testing have identified additional work to be performed in order to attempt to place the line back into service. Until new slurry transfer lines have been installed and placed into service, the 242-A Evaporator cannot slurry out concentrated waste to tank farms to allow waste volume reduction. To ensure long-term success of the evaporator, a replacement feed line will also be installed.

New transfer lines are to be installed to the 242-A Evaporator Pump Room. Prior to the installation of the new transfer lines, new core drills through the West exterior wall of the pump room will occur. To support the installation of the new wall nozzle assemblies the removal of an Not-In-Use jumper assembly will occur. The installation of the three new wall nozzles will block future access (remote via overhead crane) to existing wall nozzles 14, 15 and 16.

14. **Solution**

The removal of existing Not-In-Use jumper assembly [14 To 34] will provide better work access and remove abandoned equipment. This ECN captures the changes for the removal of the existing 242-A [14 To 34] jumper assembly and install Process Blanks on the wall nozzles where future remote access will be blocked.

Remove the existing [13 To 13A] jumper assembly connecting to the AW-02E Feed Pump Pit via 3"SN-269 transfer line. Install process blank on the disconnected wall nozzle 13 and the intermediate jumper nozzle 13A.

15. **Analysis**

None required.

16. **Description of Change**

Design verification performed in accordance with Columbia Energy & Environmental Services Procedure CE-ES-3.3.

H-2-98988 Sheet 2; Update P&ID to reflect the removal of the [14 To 34] and [13 To 13A] jumper assemblies, removal of non-compliant line 3"PW-481 to wall nozzle 14, and currently unused 3"SN-270 to wall nozzle 34, add Process Blank notation to nozzle 13A, changes as shown on page 4.

RYAN D. LANG STATE OF WASHINGTON 48191 REGISTERED PROFESSIONAL ENGINEER 8/6/2020

ENGINEERING CHANGE NOTICE

ECN No: ECN-715003 **Rev.** 01

16. **Description of Change**

H-2-99009 Sheet 1; Update Jumper Schedule table to reflect removal of the [14 To 34] and [13 To 13A] jumpers, Update plan view to show the [14 To 34] and [13 To 13A] jumpers removed and Process Blanks installed on wall nozzles 13, 14, 16, 34 and intermediate nozzle 13A, changes as shown on pages 5, 6 and 7.

H-14-107346 Sheet 3; Update to reflect the removal of jumper assemblies [14 To 34] and [13 To 13A] and installation of Process Blanks on wall nozzles 13, 14, 16, 34 and intermediate nozzle 13A, changes as shown on page 8.

17. **Work Package Number(s)**

TBD

18. **TBDs or Holds** ☒N/A

19. **Related Structures, Systems, and Components**

a. **Related Building/Facilities** ☐N/A	b. **Related Systems** ☐N/A	c. **Related Equipment ID Nos. (EIN)** ☒N/A
242-A	241-WT 242A 242A-SN	

20. **Engineering Drawings to be Changed** Does change affect the Electronic Routing Board? ☒

Drawing Number	Rev.	Title
H-14-107346 SH 003	43	DST WASTE TRANSFER PIPING DIAGRAM
H-2-98988 SH 002	21	P&ID EVAP RECIRC SYSTEM
H-2-99009 SH 001	05	PIPING JUMPER ARRANGEMENT PUMP ROOM

21. **Related Modification Traveler** ☐N/A

MT-50400

22. **Related Documents** ☒N/A

Document Number	Rev.	Title

23. **Distribution**

Name	Organization
Anderson, Ladd L	ELECTRICAL ENGINEERING
Atterbury, Brittney M	WASTE STORAGE & TECH SUPPORT
Balint, Greg G	COGNIZANT SYSTEM ENGINEERING
Becker, Brent T	COGNIZANT SYSTEM ENGINEERING
Blaak, Todd M	WASTE TRANSFER ENGINEERING
Conner, John M	PROD OPERATIONS PROCESS ENGRNG
Engeman, Jason K	TANK FARM PROJECTS ENGINEERING
Everett, Brian K	WASTE TRANSFER PLANNING MGMT
Foster, Jim	242-A/AW/ETF OPERATIONS
Franz, James A	TFP RADCON
Griffin, Peter W	TANK FARM PROJECTS ENGINEERING
Harper, Jerry G	TANK RETRIEVAL AND PROJECTS QA
Harrington, James P	
Heninger, Steve D	RETRVL & CLOSURE/PROJ ENV CMPL
Huntington, Matthew R	TANK FARM PROJECTS ENGINEERING
Huntington, Nikki L	COGNIZANT SYSTEM ENGINEERING
Klages, Deanna L	CLOSURE & INTERIM MEASURES
Lang, Ryan D	
May, Dustin R	TFP PROJECT MANAGEMENT
Moss, Hannah C	WASTE TRANSFER ENGINEERING
Smith, Gregory E	TANK FARM PROJECTS ENGINEERING

Columbia Energy AND ENVIRONMENTAL SERVICES

Design Verification Checklist

Doc. Number	Rev.	Title
ECN-715003	01	242-A Evaporator Pump Room Jumper Removal

Verification Method (Check One)

☒ Review ☐ Alternate Calculation ☐ Qualification Testing

Verification Results

Yes	No	NA	
☒	☐	☐	Design inputs correctly selected and cited and correctly incorporated.
☒	☐	☐	Input data were checked for consistency with original source information.
☐	☐	☒	Design inputs for interfacing organizations are specified
☐	☐	☒	Necessary assumptions are explicit, adequately described and supported.
☐	☐	☒	Unverified assumptions (requiring verification) are clearly identified.
☐	☐	☒	Analytical and technical approaches and results are reasonable and appropriate.
☐	☐	☒	The version or revision of each reference is cited
☐	☐	☒	Design output is reasonable for design inputs
☐	☐	☒	Results and conclusions address all points in the purpose.
☐	☐	☒	Conclusions are consistent with analytical results and applicable limits.
☒	☐	☐	Suitable materials, parts, processes, and inspection and testing criteria specified
☒	☐	☐	All comments have been adequately addressed and dispositioned
☐	☐	☒	Calculations are sufficiently detailed such that a technically qualified person could reproduce the calc.
☐	☐	☒	Design method(s) are appropriately used and documented.
☐	☐	☒	Computer Program(s) are appropriately used and results support design.
☐	☐	☒	For pre-verified computer programs the V&V document is referenced and specific computer used for the calculation is identified

Ensure calculations that use software include a paper printout, microfiche, CD-ROM, or other electronic file of the input data and identification to the computer, computer codes, and versions used, or provide alternate documentation to uniquely and clearly identify the exact coding and execution process.

Checker Name	Signature	Date
JP Harrington	[signature]	3/7/20

CE-ES-3.3-F1, 10/20/14

ENGINEERING CHANGE NOTICE CONTINUATION SHEET	1a. ECN-715003 1b. Proj. T1P207

Document/Drawing No. H-2-98988	Sheet 2	Revision 21

WAS:

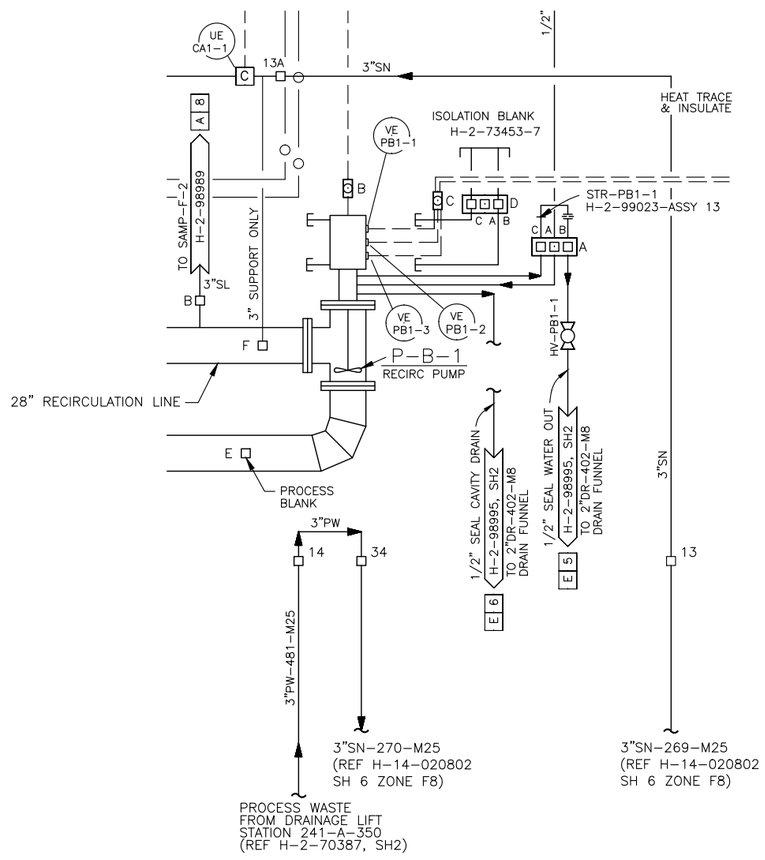

IS:

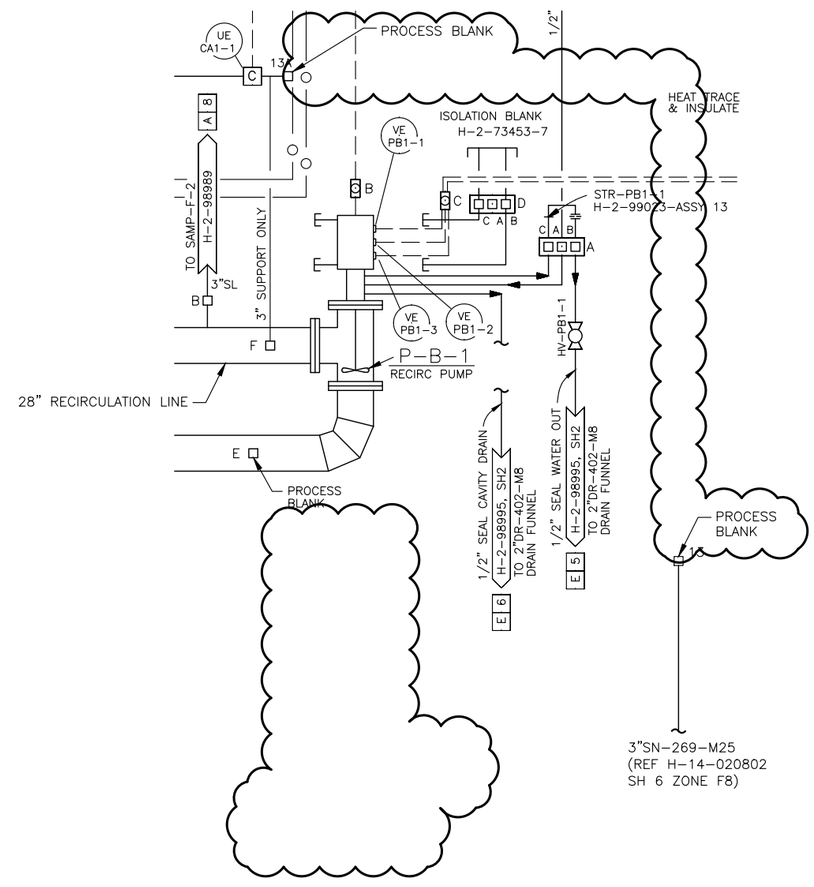

ENGINEERING CHANGE NOTICE CONTINUATION SHEET	1a. ECN-715003 1b. Proj. T1P207

Document/Drawing No. H-2-99009 Sheet 1 Revision 5

ECN NOTE: INCORPORATES CHANGES MADE BY ECN-711932 REV 00 AND ECN-714967 REV. 00.

WAS:

PUMP ROOM JUMPER SCHEDULE

JUMPER NAME	NOZZLE FROM	NOZZLE TO	SERVICE/PURPOSE	DRAWING NUMBER
13 TO 13A	13	13A	SUPERNATE FROM TK-241-AW-102-02E	H-14-109331
14 TO 34	14	34	PROCESS WASTE (241-A-350) SUPERNATE (34) TO SN-270	H-2-70462
15 TO 17	15	17	POWER/SIGNAL	H-2-99021
20 TO (P-B-1) C	20	(P-B-1) C	POWER/SIGNAL	H-2-99022
21 (SPARE)	21	N/A	POWER/SIGNAL	N/A
21 TO 36	36	21	SLURRY	H-2-99043
24 TO 2	24	2	POWER/SIGNAL, PE-CA1-8 PSH-CA1-3, PSH-PB2-1 POSN-ZS-CA1-2-1, 2-2, 2A-2, ZT-CA1-3	H-2-99020
30 TO 6	30	6 & 20	POWER/SIGNAL AT-PB1-2, VE-PB1-1/2/3	H-2-99012
31 TO (P-B-2) F	31	(P-B-2) F	SIGNAL, AT-PB2-1, ST-PB2-1 VE-PB2-1, TE-PB2-1	H-2-99015
32 TO (P-B-2) G	32	(P-B-2) G	WATER, FILTERED RAW TO PUMP SEAL	H-2-99013
33 TO (P-B-2) D	33	(P-B-2) D	POWER TO PUMP 460 VOLT	H-2-99011
37 TO (P-B-2) H	37	(P-B-2) H	GREASE TO MOTOR BEARINGS	H-2-99006
C TO (P-B-2) 13	C	(P-B-2) 13		H-2-99024
C TO 4-40	C	4 & 40		H-2-836148
4 D TO 13A	D	13A	SUPERNATE EVAPORATOR FEED	H-14-107263
E (BLANK)	E	N/A	SLURRY	H-2-32440
G TO B	G	B	SLURRY	H-2-90977
H TO A	H	A	SLURRY	H-2-90978
FROM SAMPLE CABINET	SAMPLE CABINET	J	SUPERNATE	
TO SAMPLE CABINET	K	SAMPLE CABINET	SUPERNATE	
FROM SAMPLE CABINET	SAMPLE CABINET	H	SLURRY	H-2-70087
TO SAMPLE CABINET	G	SAMPLE CABINET	SLURRY	H-2-70087

IS:

PUMP ROOM JUMPER SCHEDULE

JUMPER NAME	NOZZLE FROM	NOZZLE TO	SERVICE/PURPOSE	DRAWING NUMBER
15 TO 17	15	17	POWER/SIGNAL	H-2-99021
20 TO (P-B-1) C	20	(P-B-1) C	POWER/SIGNAL	H-2-99022
21 (SPARE)	21	N/A	POWER/SIGNAL	N/A
21 TO 36	36	21	SLURRY	H-2-99043
24 TO 2	24	2	POWER/SIGNAL, PE-CA1-8 PSH-CA1-3, PSH-PB2-1 POSN-ZS-CA1-2-1, 2-2, 2A-2, ZT-CA1-3	H-2-99020
30 TO 6	30	6 & 20	POWER/SIGNAL AT-PB1-2, VE-PB1-1/2/3	H-2-99012
31 TO (P-B-2) F	31	(P-B-2) F	SIGNAL, AT-PB2-1, ST-PB2-1 VE-PB2-1, TE-PB2-1	H-2-99015
32 TO (P-B-2) G	32	(P-B-2) G	WATER, FILTERED RAW TO PUMP SEAL	H-2-99013
33 TO (P-B-2) D	33	(P-B-2) D	POWER TO PUMP 460 VOLT	H-2-99011
37 TO (P-B-2) H	37	(P-B-2) H	GREASE TO MOTOR BEARINGS	H-2-99006
C TO (P-B-2) 13	C	(P-B-2) 13		H-2-99024
C TO 4-40	C	4 & 40		H-2-836148
4 D TO 13A	D	13A	SUPERNATE EVAPORATOR FEED	H-14-107263
E (BLANK)	E	N/A	SLURRY	H-2-32440
G TO B	G	B	SLURRY	H-2-90977
H TO A	H	A	SLURRY	H-2-90978
FROM SAMPLE CABINET	SAMPLE CABINET	J	SUPERNATE	
TO SAMPLE CABINET	K	SAMPLE CABINET	SUPERNATE	
FROM SAMPLE CABINET	SAMPLE CABINET	H	SLURRY	H-2-70087
TO SAMPLE CABINET	G	SAMPLE CABINET	SLURRY	H-2-70087

ENGINEERING CHANGE NOTICE CONTINUATION SHEET	1a. ECN-715003
	1b. Proj. T1P207

Document/Drawing No. H-2-99009 Sheet 1 Revision 5

ECN NOTE: INCORPORATES CHANGES MADE BY ECN-714967 REV. 00.

ECN NOTE: PROCESS BLANKS SHOWN ON NOZZLES 17 AND 18 REFLECTS THE AS-FOUND CONDITION. THE INSTALLATION OF NEW PROCESS BLANKS IS NOT REQUIRED.

WAS:

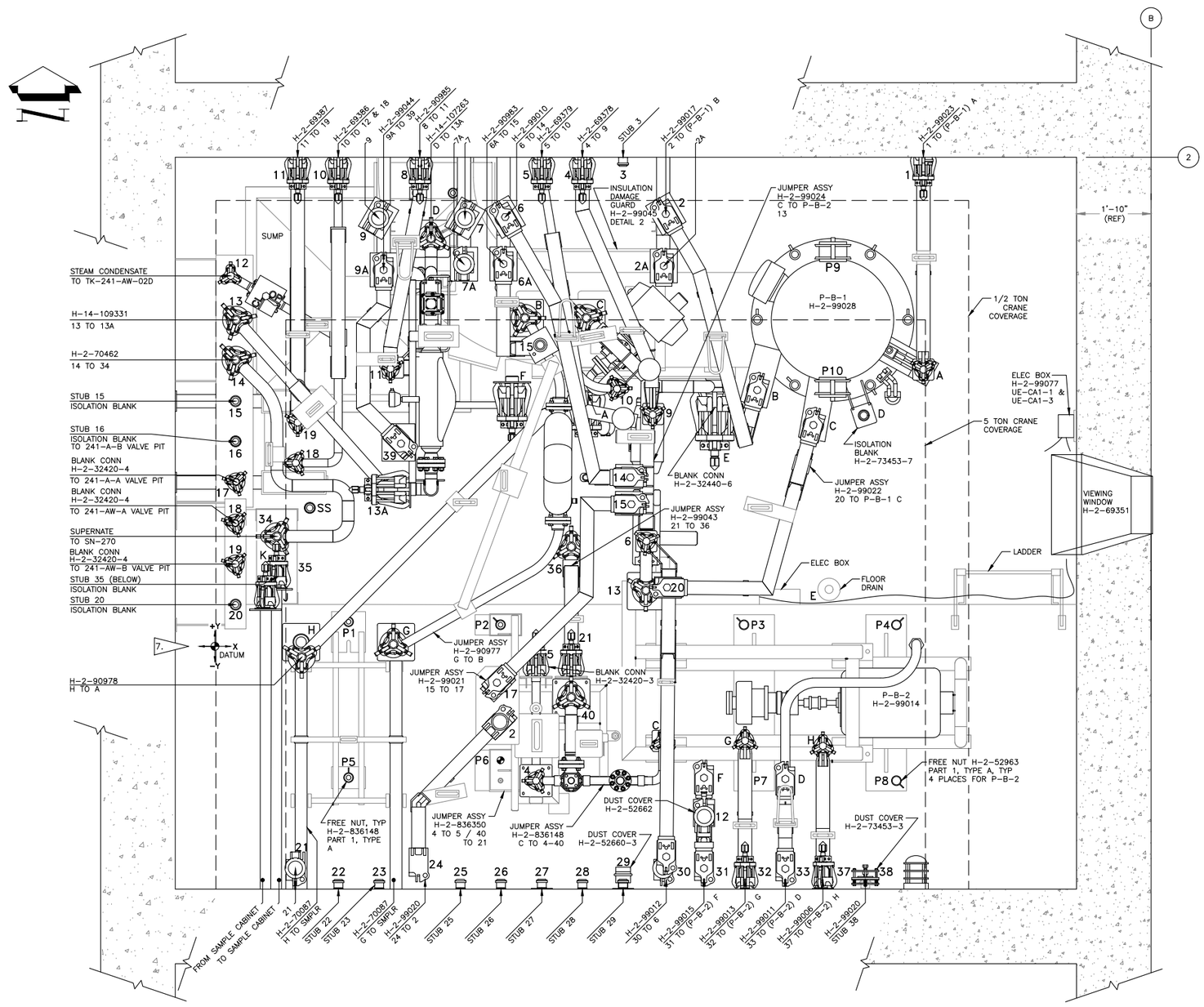

ENGINEERING CHANGE NOTICE CONTINUATION SHEET	1a. ECN–715003 1b. Proj. T1P207

Document/Drawing No. H–2–99009 Sheet 1 Revision 5

IS:

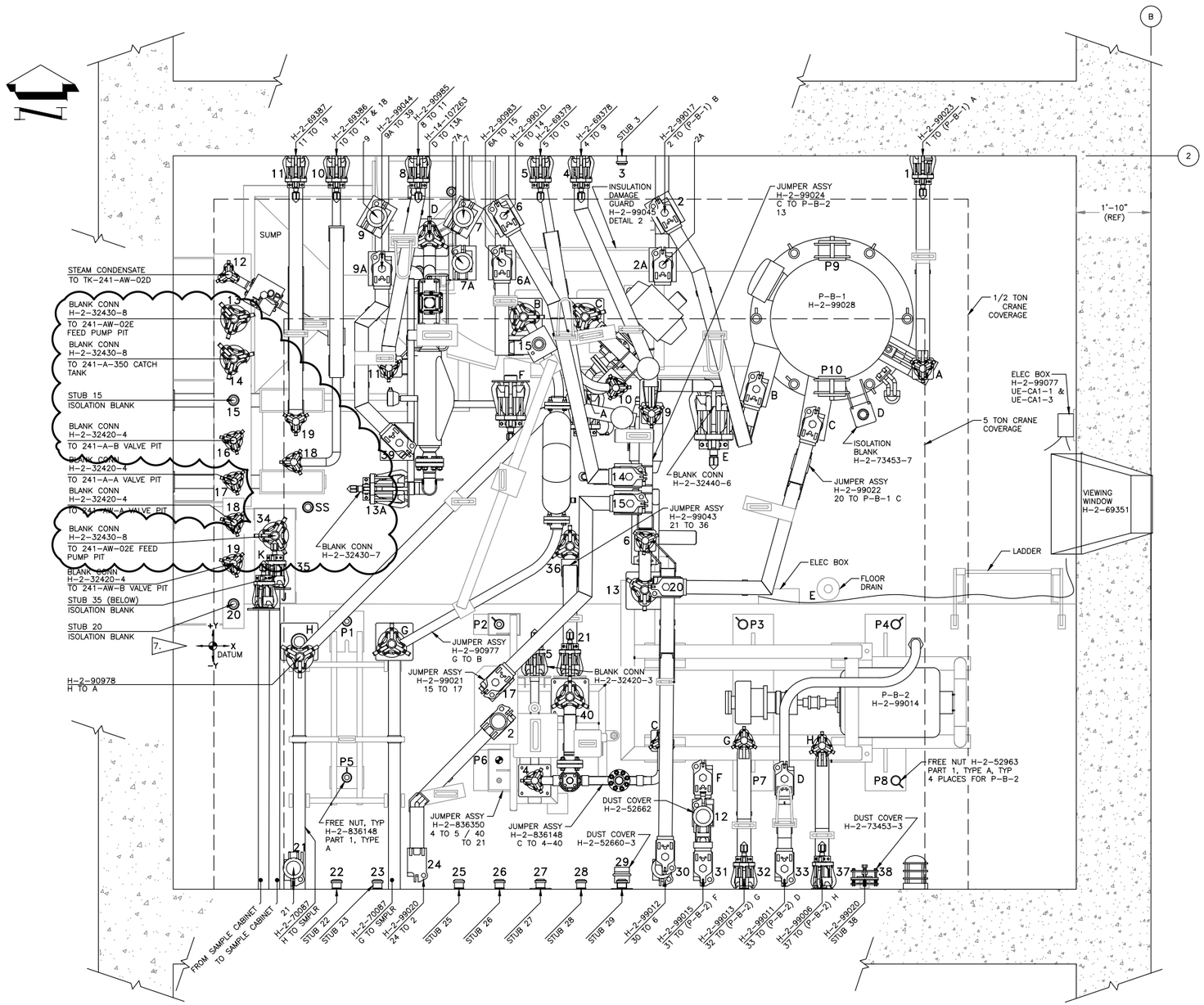

ENGINEERING CHANGE NOTICE CONTINUATION SHEET	1a. ECN– 715003 1b. Proj. T1P207

Document/Drawing No. H–14–107346	Sheet 3	Revision 43

WAS:

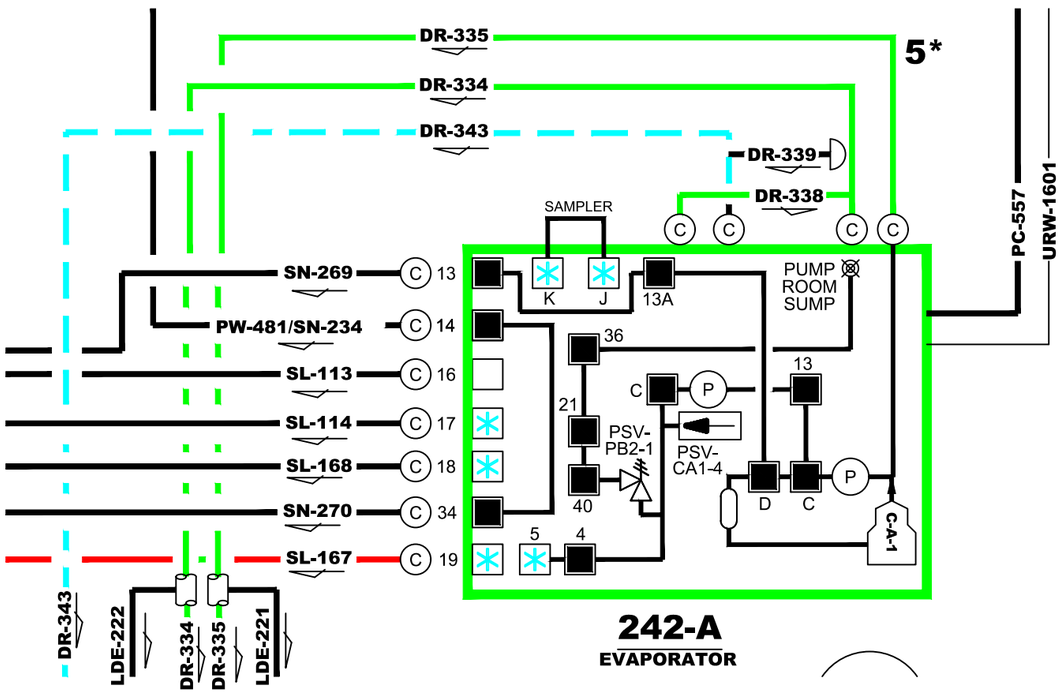

IS:

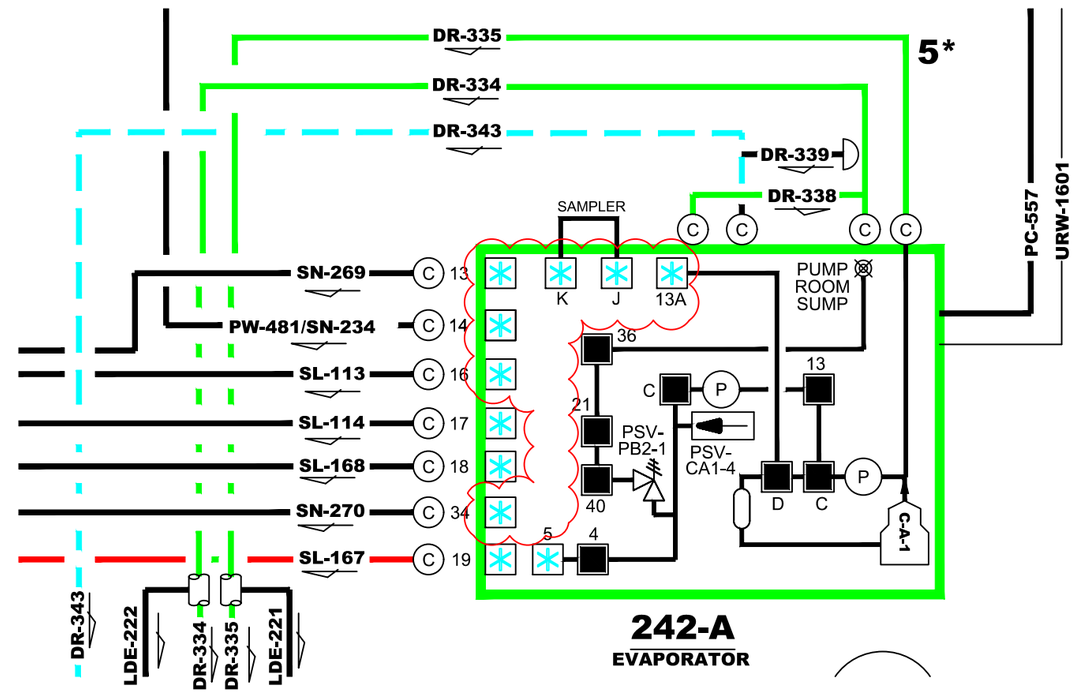

ENGINEERING CHANGE NOTICE

Prepared For the U.S. Department of Energy, Assistant Secretary for Environmental Management
By Washington River Protection Solutions, LLC., PO Box 850, Richland, WA 99352
Contractor For U.S. Department of Energy, Office of River Protection, under Contract DE-AC27-08RV14800

TRADEMARK DISCLAIMER: Reference herein to any specific commercial product, process, or service by trade name, trademark, manufacturer, or otherwise, does not necessarily constitute or imply its endorsement, recommendation, or favoring by the United States government or any agency thereof or its contractors or subcontractors. Printed in the United States of America.

Release Stamp

DATE: Apr 01,2020 HANFORD RELEASE

1a. **ECN No:** ECN-715004 **Rev.** 01	1b. **Project Number:** T1P207 ☐N/A
2. **Title:** CORE DRILL AND INSTALL WALL NOZZLE 41, 42 AND 43 ASSEMBLIES AT 242-A EVAPORATOR PUMP ROOM	
3. **WA or Redline ECN:** ☐ WA ☐ REDLINE ☒ N/A	4. **Temporary Modification:** ☐ Yes ☒ No
5. **Design Type:** I	6. **Design Verification Required:** ☒Yes ☐No
7. **Safety Classification:** ☐SC ☒SS ☐GS ☐N/A	
8. **USQ Number:** EV-20-0497-D, Rev. 0 ☐ N/A	9. **PrHA Number** PrHA-57384 **Rev.** 00 ☐ N/A

Workflow Approval Status: Submitted for USQ
Clearance Review Restriction Type: undefined

10. **Trend Codes**

Cause	Commodity	Discipline Driver
Customer Initiated Changes	Mechanical Equipment	Mechanical

11. **Design Authority Designator**

PRJ - 242-A TRANSFER LINE REPLACEMENT PROJECT

12. **Approvals**

Title	Name	Signature	Date
Design Authority	Engeman, Jason K	*Engeman, Jason K*	03/30/2020
Design Verifier	Harrington, James P	*Harrington, James P*	02/10/2020
Checker	Harrington, James P	*Harrington, James P*	02/10/2020
Document Control Approval	Scales, Anthony	*Scales, Anthony*	04/01/2020
Environmental Protection	Heninger, Steve D	*Heninger, Steve D*	02/10/2020
Originator	Lang, Ryan D	*Lang, Ryan D*	02/10/2020
Other Approver	Balint, Greg G	*Balint, Greg G*	03/30/2020
PrHA Lead	Kozlowski, Stephen D	*Kozlowski, Stephen D*	03/31/2020
Quality Assurance	Harper, Jerry G	*Harper, Jerry G*	03/30/2020
Radiological Control	Franz, James A	*Franz, James A*	02/27/2020
Responsible Engineering Manager	Huntington, Matthew R	*Huntington, Matthew R*	03/31/2020
USQ Evaluator	Carlstrom, Richard	*Carlstrom, Richard*	03/31/2020
Welding Engineer	Berkey, James	*Berkey, James*	02/10/2020
Waste Transfer Engineering	Moss, Hannah C	*Moss, Hannah C*	03/26/2020

13. **Problem**

Revise ECN to update MQIP, background for changes by ECN-715003, remove installation instruction paint notes, updated wall nozzle details.

Recent pneumatic testing on the encasement of SL-167 has determined that it cannot maintain pressure, and therefore cannot be used to compliantly transfer waste. Recent visual inspection of SL-168 (the back-up slurry line) and pneumatic testing have identified additional work to be performed in order to attempt to place the line back into service. Until new slurry transfer lines have been installed and placed into service the 242-A Evaporator cannot slurry out concentrated waste to tank farms to allow waste volume reduction. To ensure long-term success of the evaporator, a replacement feed line will also be installed.

New transfer lines are to be installed to the 242-A Evaporator Pump Room. Prior to the installation of the new transfer lines, new core drills through the West exterior wall of the pump room will occur.

RYAN D. LANG STATE OF WASHINGTON 48191 REGISTERED PROFESSIONAL ENGINEER 8/4/2020

14. **Solution**

This ECN documents the three new core drill penetrations required through the exterior west wall of the Pump Room and detailed installation of the new Pump Room wall nozzle assemblies. The connection of the new waste transfer lines to the new wall nozzle assemblies leading to 241-AW will occur at a later date.

15. **Analysis**

Refer to RPP-CALC-63208 for the supporting analyses for the core drill penetrations and wall nozzle assemblies. RPP-CALC-63211 shall address the applicable ASME B31.3 calculation for the wall nozzle assemblies, when the new transfer lines are connected.

ENGINEERING CHANGE NOTICE

ECN No: ECN-715004 **Rev.** 01

16. **Description of Change**

Installation Instructions (Not to be Incorporated) -

Apply sealant, Sikaflex-1a or approved alternate, between the concrete wall and the sealing surface of the adjoining exterior wall mounting plate.

Design verification performed in accordance with Columbia Energy & Environmental Services Procedure CE-ES-3.3.

H-2-69338 Sheet 1; Depict installed location of new wall nozzle 41, 42 and 43 assemblies, add reference elevations for pipe penetration centerlines and nozzle elevations, changes as shown on pages 8 and 9.

H-2-98988 Sheet 2; Reflect the installation of new wall nozzle 43 and add reference to future transfer line installation, change as shown on page 10.

H-2-98989 Sheet 1; Reflect the installation of new wall nozzles 41 and 42 and add reference to future transfer line installations, change as shown on page 11.

H-2-99009 Sheet 1; Add view of new wall nozzle assemblies (Stubs 41, 42 and 43), Update information for existing Stub's 14, 15 and 16 located below new assemblies, change as shown on pages 12 and 13.

H-2-99009 Sheet 2; Add Nozzle number 41, 42 and 43 position information and reference to flag note 9, Add new flag note 9, changes as shown on pages 14 and 15.

H-2-99029 Sheet 1; Depict installed location of new wall nozzle 41, 42 and 43 assemblies, and added reference to new Section views, changes as shown on pages 16 and 17.

H-2-99030 Sheet 1; Update Section to show new wall nozzles 41, 42 and 43 installation, Add new Section views to support the installation details of new wall nozzle assemblies, changes as shown on pages 18 and 19.

H-14-020802 Sheet 6; Update to include new wall nozzles 41, 42 and 43 with reference to future transfer lines, changes to page 20.

H-14-107346 Sheet 3; Update to reflect the installation of new "spare" wall nozzles 41, 42 and 43, changes as shown on pages 21 and 22.

17. **Work Package Number(s)**

TBD

18. **TBDs or Holds** ☒N/A

19. **Related Structures, Systems, and Components**

a. **Related Building/Facilities** ☐N/A	b. **Related Systems** ☐N/A	c. **Related Equipment ID Nos. (EIN)** ☒N/A
242-A	242A 242A-STRU	

20. **Engineering Drawings to be Changed** Does change affect the Electronic Routing Board? ☒

Drawing Number	Rev.	Title
H-14-020802 SH 006	11	WASTE TRANSFER SYSTEM (WT) O&M SYSTEM P&ID
H-14-107346 SH 003	43	DST WASTE TRANSFER PIPING DIAGRAM
H-2-69338 SH 001	04	PIPING ARRANGEMENT PUMP ROOM & HOT EQUIP. STORAGE SECTIONS
H-2-98988 SH 002	21	P&ID EVAP RECIRC SYSTEM
H-2-98989 SH 001	29	P&ID SLURRY SYSTEM
H-2-99009 SH 001	05	PIPING JUMPER ARRANGEMENT PUMP ROOM
H-2-99009 SH 002	00	PIPING JUMPER ARRANGEMENT PUMP ROOM
H-2-99029 SH 001	02	PIPING EVAPORATOR-PUMP ROOM PLANS AND SECTION
H-2-99030 SH 001	03	PIPING EVAPORATOR-PUMP ROOM SECTIONS AND DETAILS

21. **Related Modification Traveler** ☐N/A

MT-50400

22. **Related Documents** ☐N/A

Document Number	Rev.	Title
RPP-CALC-63208	00	Structural Analysis for the 242-A Pump Room Wall Nozzle Assemblies Plus Counterweight Lifting Devices
RPP-CALC-63211	00	ASME B31.3 Analyses of the New SL-170, SL-171, SL-172 and SN-275 Waste Transfer Lines in 241-AW Tank Farm

23. **Distribution**

Name	Organization
Anderson, Ladd L	ELECTRICAL ENGINEERING
Atterbury, Brittney M	WASTE STORAGE & TECH SUPPORT
Balint, Greg G	COGNIZANT SYSTEM ENGINEERING

ENGINEERING CHANGE NOTICE

ECN No: ECN-715004 **Rev.** 01

23. **Distribution**

Name	**Organization**
Becker, Brent T	COGNIZANT SYSTEM ENGINEERING
Berkey, James	ENGINEERING PROGRAMS
Blaak, Todd M	WASTE TRANSFER ENGINEERING
Conner, John M	PROD OPERATIONS PROCESS ENGRNG
Engeman, Jason K	TANK FARM PROJECTS ENGINEERING
Everett, Brian K	WASTE TRANSFER PLANNING MGMT
Foster, Jim	242-A/AW/ETF OPERATIONS
Franz, James A	TFP RADCON
Griffin, Peter W	TANK FARM PROJECTS ENGINEERING
Harper, Jerry G	TANK RETRIEVAL AND PROJECTS QA
Heninger, Steve D	RETRVL & CLOSURE/PROJ ENV CMPL
Huntington, Matthew R	TANK FARM PROJECTS ENGINEERING
Huntington, Nikki L	COGNIZANT SYSTEM ENGINEERING
Klages, Deanna L	CLOSURE & INTERIM MEASURES
Lang, Ryan D	
May, Dustin R	TFP PROJECT MANAGEMENT
Moss, Hannah C	WASTE TRANSFER ENGINEERING
Smith, Gregory E	TANK FARM PROJECTS ENGINEERING

Columbia Energy AND ENVIRONMENTAL SERVICES

Design Verification Checklist

Doc. Number	Rev.	Title
ECN-715004	01	Core Drill and Install Wall Nozzle 41, 42 and 43 Assemblies at 242-A Evaporator Pump Room

Verification Method (Check One)

☒ Review ☐ Alternate Calculation ☐ Qualification Testing

Verification Results

Yes	No	NA	
☒	☐	☐	Design inputs correctly selected and cited and correctly incorporated.
☒	☐	☐	Input data were checked for consistency with original source information.
☐	☐	☒	Design inputs for interfacing organizations are specified
☐	☐	☒	Necessary assumptions are explicit, adequately described and supported.
☐	☐	☒	Unverified assumptions (requiring verification) are clearly identified.
☐	☐	☒	Analytical and technical approaches and results are reasonable and appropriate.
☐	☐	☒	The version or revision of each reference is cited
☐	☐	☒	Design output is reasonable for design inputs
☐	☐	☒	Results and conclusions address all points in the purpose.
☐	☐	☒	Conclusions are consistent with analytical results and applicable limits.
☒	☐	☐	Suitable materials, parts, processes, and inspection and testing criteria specified
☒	☐	☐	All comments have been adequately addressed and dispositioned
☐	☐	☒	Calculations are sufficiently detailed such that a technically qualified person could reproduce the calc.
☐	☐	☒	Design method(s) are appropriately used and documented.
☐	☐	☒	Computer Program(s) are appropriately used and results support design.
☐	☐	☒	For pre-verified computer programs the V&V document is referenced and specific computer used for the calculation is identified

Ensure calculations that use software include a paper printout, microfiche, CD-ROM, or other electronic file of the input data and identification to the computer, computer codes, and versions used, or provide alternate documentation to uniquely and clearly identify the exact coding and execution process.

Checker Name	Signature	Date
JP Harrington		2/2/20

CE-ES-3.3-F1, 10/20/14

Washington River Protection Solutions

MODIFICATION QUALITY INSPECTION PLAN (MQIP)

ECN No.: 715004 **Rev No.:** 01

INSPECTION/TEST No. 1

Description of Inspection/Test:
Ensure new primary pipe section of the wall nozzle assemblies are free from packing material or blockages.

Inspection/Test Basis:	Supporting Documentation:
Engineering Best Practice	N/A

Method of Inspection/Test:	Acceptance Criteria/Tolerances:	Sample Size/Plan:
Visual	No debris	100%

Inspection/Test Organization: QC ☒ Witness ☐ Hold

INSPECTION/TEST No. 2

Description of Inspection/Test:
Ensure new encasement pipe section of the wall nozzle assemblies are free from packing material or blockages.

Inspection/Test Basis:	Supporting Documentation:
Engineering Best Practice	N/A

Method of Inspection/Test:	Acceptance Criteria/Tolerances:	Sample Size/Plan:
Visual	No debris	100%

Inspection/Test Organization: QC ☒ Witness ☐ Hold

"ADD SECTION"

INSPECTION/TEST No. 3

Description of Inspection/Test:
Gasket condition

Inspection/Test Basis:	Supporting Documentation:
Engineering Best Practice	N/A

Method of Inspection/Test:	Acceptance Criteria/Tolerances:	Sample Size/Plan:
Visual	Gasket Condition: No damage and securely sealed to back of wall mounting plate	100%

Inspection/Test Organization: QC ☒ Witness ☐ Hold

☒

A-6006-954 (REV 0)

Washington River Protection Solutions

MODIFICATION QUALITY INSPECTION PLAN (continued)

ECN No.: 715004 **Rev No.:** 01

INSPECTION/TEST No. 4			
Description of Inspection/Test: Nozzle Position and Level			
Inspection/Test Basis: Engineering Best Practice		Supporting Documentation: N/A	
Method of Inspection/Test: Visual/Level	Acceptance Criteria/Tolerances: Nozzle Position: Ensure the PUREX nozzle orientation is correct (upwards for Vertical nozzle). Nozzle level: Ensure the wall nozzle assembly reference block orientation is level +/- 0.25 degrees.	Sample Size/Plan: 100%	X
Inspection/Test Organization: QC		☒ Witness ☐ Hold	

INSPECTION/TEST No. 5			
Description of Inspection/Test: Grout Fill			
Inspection/Test Basis: Engineering Best Practice		Supporting Documentation: N/A	
Method of Inspection/Test: Visual	Acceptance Criteria/Tolerances: Ensure annulus between core drill penetration and exterior of the wall nozzle assembly encasement is filled by viewing steady stream of grout flowing out of the upper vent hole.	Sample Size/Plan: 100%	X
Inspection/Test Organization: QC		☒ Witness ☐ Hold	

INSPECTION/TEST No. 6			
Description of Inspection/Test: Base Plate Anchorage			
Inspection/Test Basis: Engineering Best Practice		Supporting Documentation: N/A	X
Method of Inspection/Test: Visual	Acceptance Criteria/Tolerances: Ensure base plate concrete anchors are properly installed and torqued 110 ft-lbs +10/-0 ft-lbs	Sample Size/Plan: 100%	
Inspection/Test Organization: QC		☒ Witness ☐ Hold	

Washington River Protection Solutions

MODIFICATION QUALITY INSPECTION PLAN (continued)

ECN No.: 715004 **Rev No.:** 01

INSPECTION/TEST No. 7			
Description of Inspection/Test: Nozzle Assembly Encasement Weld to Exterior Wall Mounting Plate			
Inspection/Test Basis: Certified Weld Inspector/ASME B31.3		Supporting Documentation: N/A	X
Method of Inspection/Test: Visual	Acceptance Criteria/Tolerances: ASME B31.3-2016, Table 341.3.2	Sample Size/Plan: 100%	
Inspection/Test Organization: QC		☒ Witness ☐ Hold	

ENGINEERING CHANGE NOTICE CONTINUATION SHEET	1a. ECN–715004 1b. Proj. T1P207

Document/Drawing No. H–2–69338	Sheet 1	Revision 4

WAS:

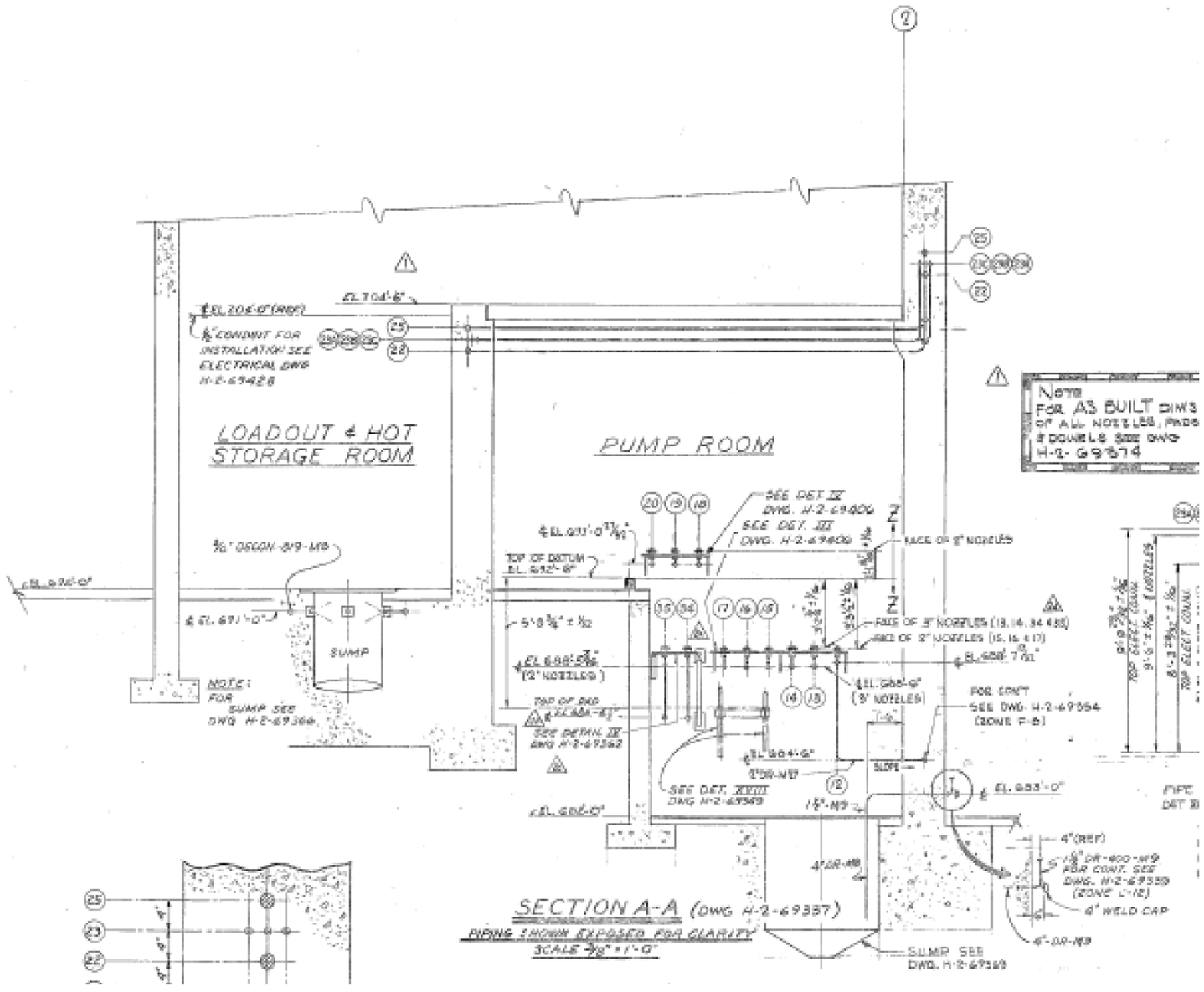

ENGINEERING CHANGE NOTICE CONTINUATION SHEET	1a. ECN– 715004 1b. Proj. T1P207

Document/Drawing No. H–2–69338	Sheet 1	Revision 4

IS:

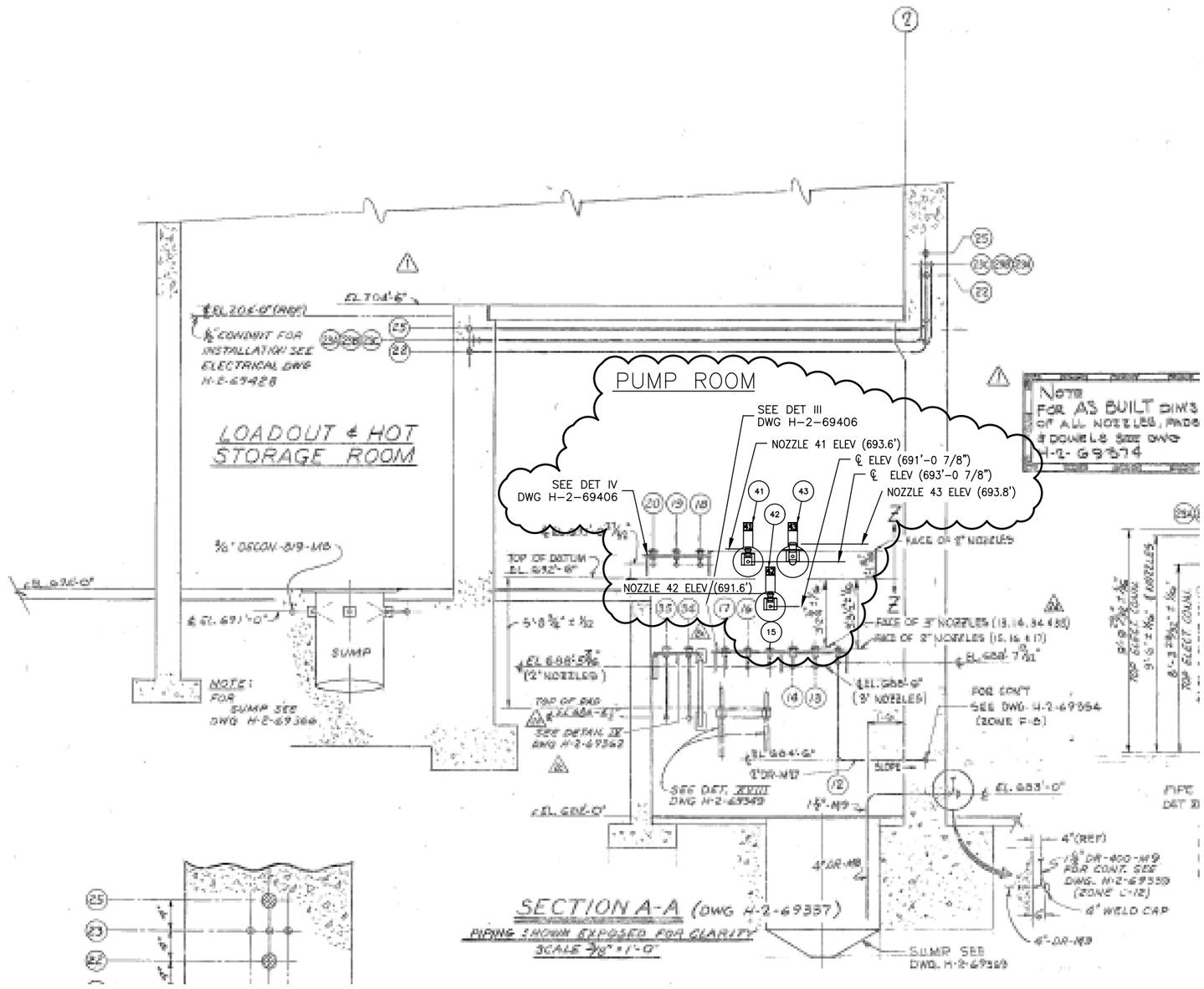

ENGINEERING CHANGE NOTICE CONTINUATION SHEET	1a. ECN-715004 1b. Proj. T1P207

Document/Drawing No. H-2-98988 Sheet 2 Revision 21

WAS: ECN NOTE: INCORPORATES CHANGES MADE BY ECN-715003 REV. 01

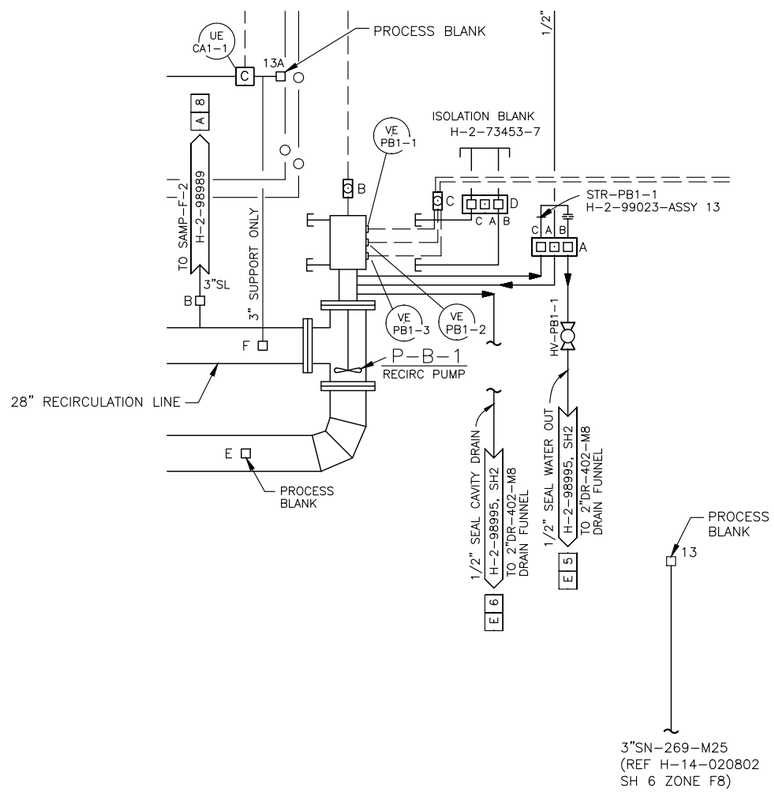

IS:

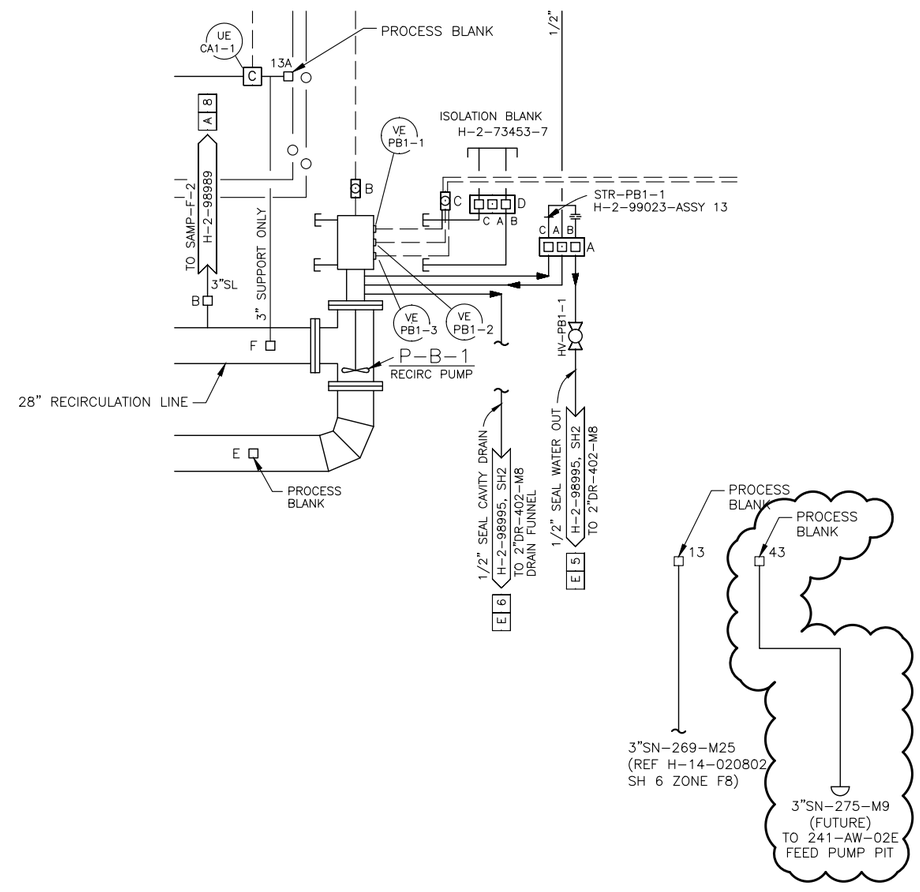

ENGINEERING CHANGE NOTICE CONTINUATION SHEET	1a. ECN– 715004 1b. Proj. T1P207

Document/Drawing No. H–2–98989 Sheet 1 Revision 29

WAS:

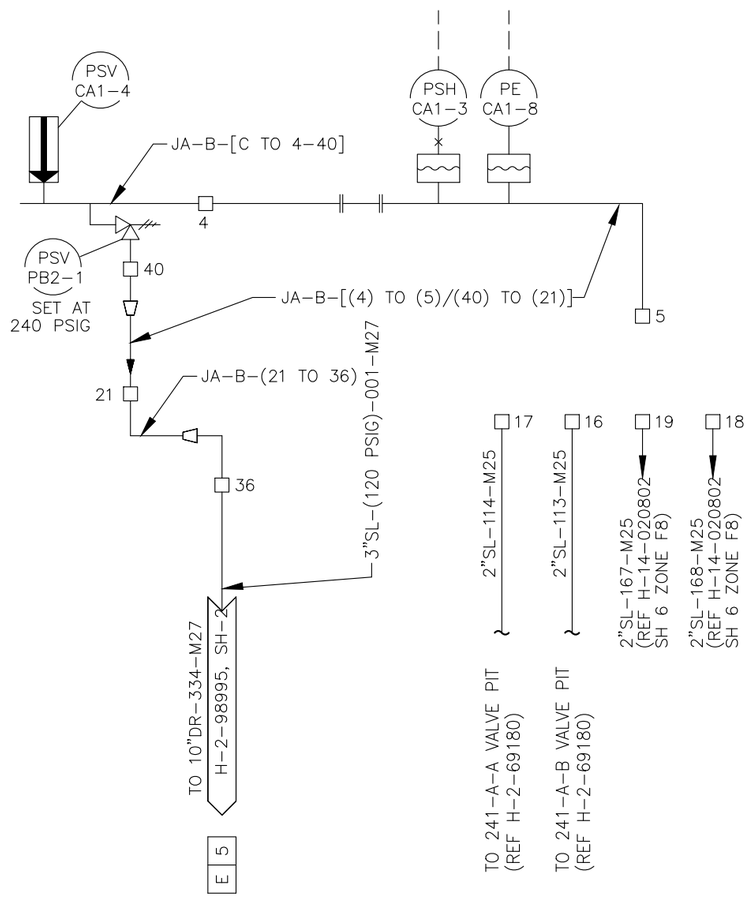

IS:

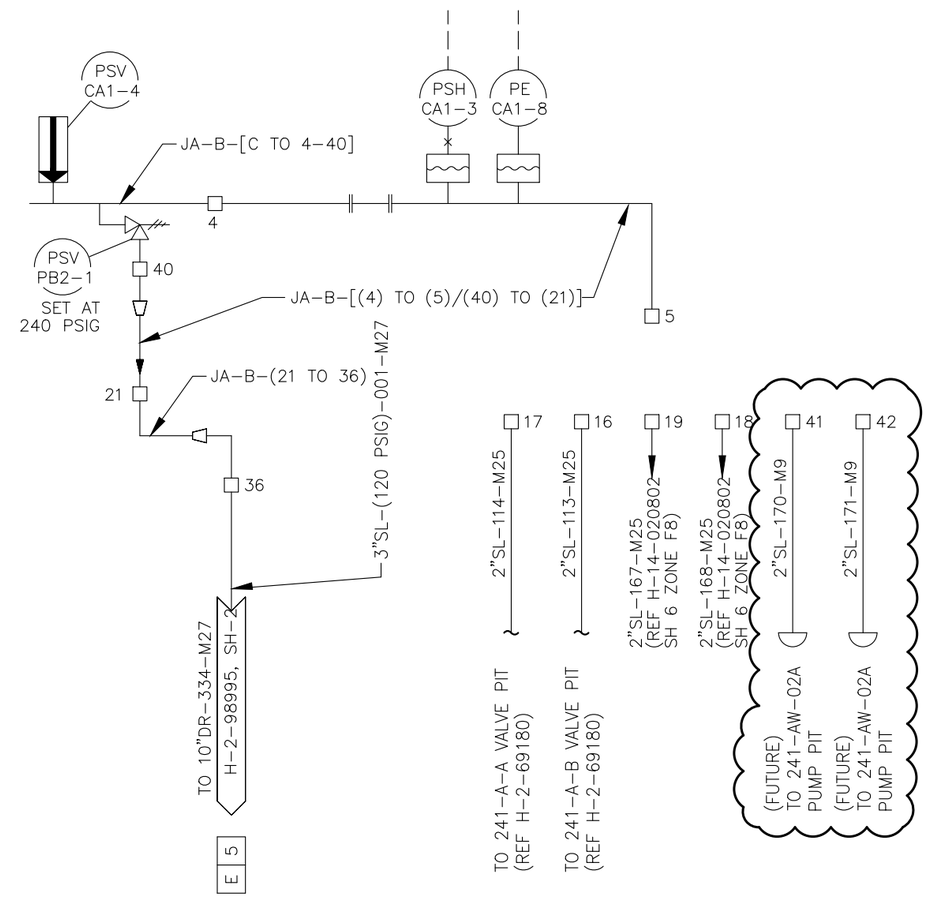

ENGINEERING CHANGE NOTICE CONTINUATION SHEET	1a. ECN-715004 1b. Proj. T1P207

Document/Drawing No. H-2-99009	Sheet 1	Revision 5

WAS: ECN NOTE: INCORPORATES CHANGES MADE BY ECN-714967 REV. 00 AND ECN-715003 REV. 01

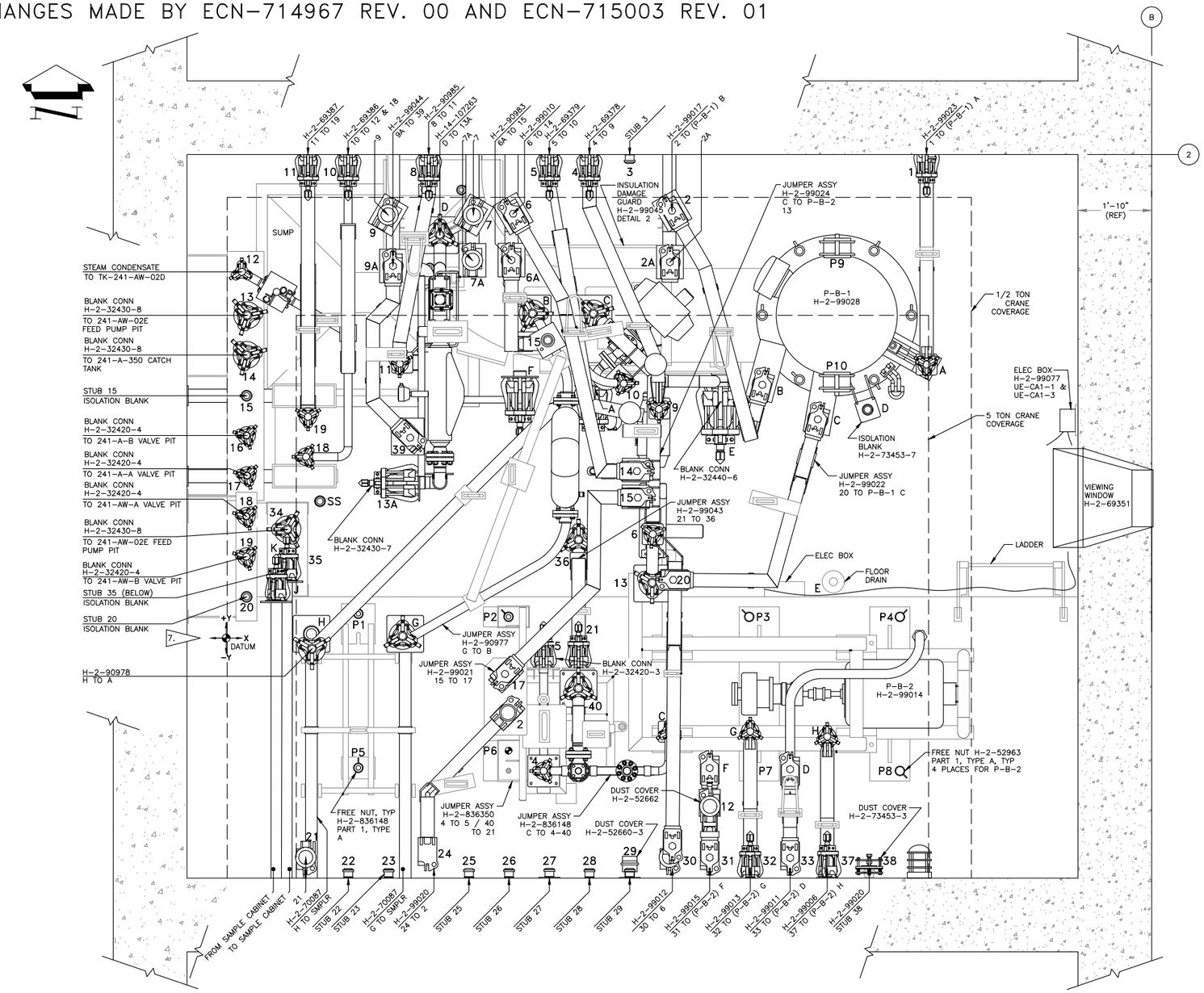

ENGINEERING CHANGE NOTICE CONTINUATION SHEET	1a. ECN-715004 1b. Proj. T1P207

Document/Drawing No. H-2-99009 Sheet 1 Revision 5

IS:

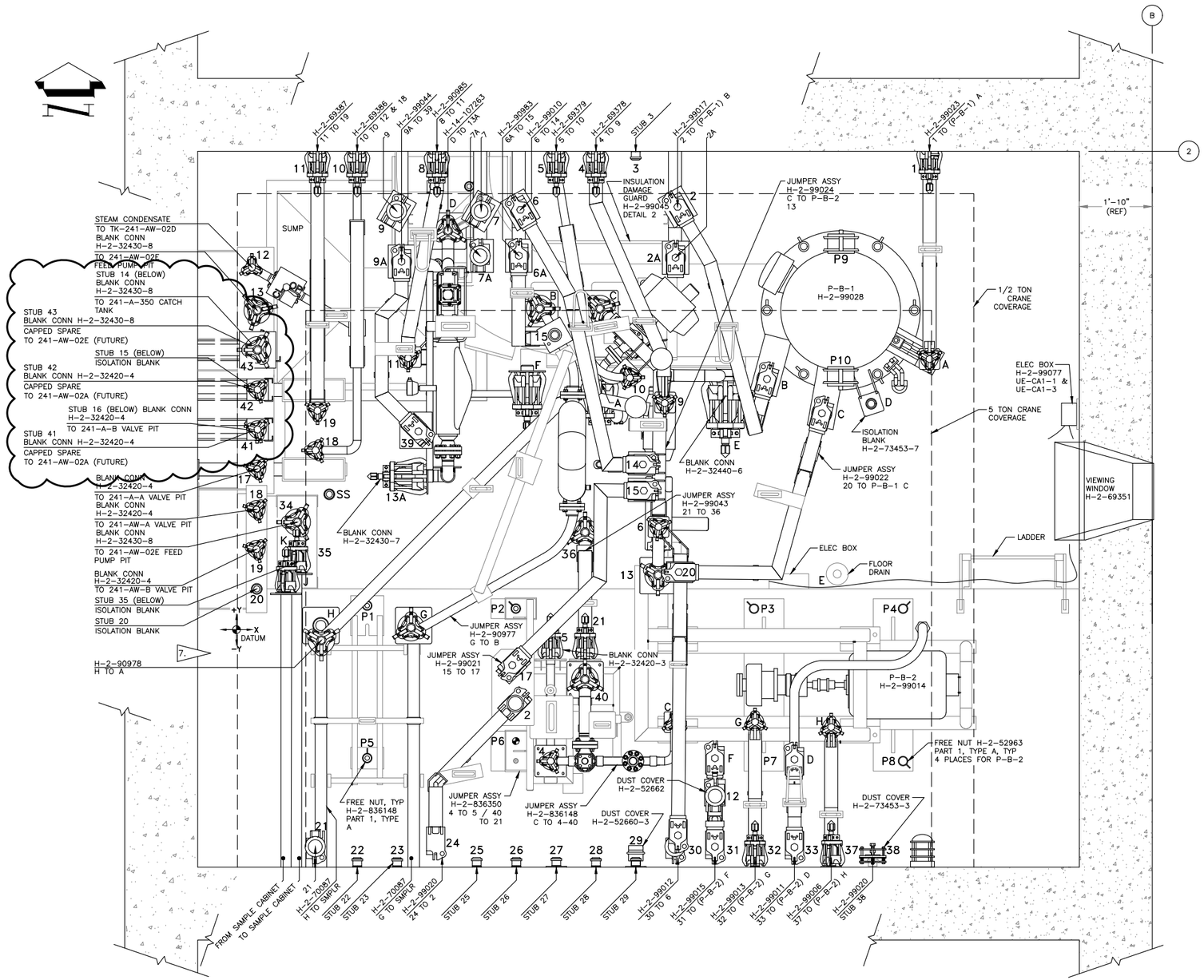

ENGINEERING CHANGE NOTICE CONTINUATION SHEET	1a. ECN-715004 1b. Proj. T1P207

Document/Drawing No. H-2-99009 Sheet 2 Revision 0

WAS:

NOZZLE POSITION

NOZZ NO.	X	Y	Z		NOZZ NO.	X	Y	Z
1	17'-6 1/16"	11'-11 13/16"	9'-6 37/64"					
2	11'-0 25/32"	10'-7 1/4"	9'-9 33/64"					
2A	11'-0 3/16"	9'-3 29/32"	8'-4 1/64"					
3	10'-0 11/64"	11'-9 25/32"	9'-5 7/16"					
4	9'-0 5/32"	11'-9 13/16"	9'-5 15/32"					
5	8'-0 3/16"	11'-9 13/16"	9'-5 1/2"					
6	7'-1 3/8"	10'-6 11/32"	9'-10 9/32"					
6A	7'-0 7/8"	9'-4 1/2"	8'-5 13/64"					
7	6'-1 33/64"	10'-5 15/16"	9'-11"					
7A	6'-1 7/32"	9'-4 7/16"	8'-5 1/32"					
8	5'-0 3/16"	11'-9 23/32"	9'-5 17/32"					
9	4'-0 1/32"	10'-6"	9'-9 29/32"					
9A	4'-1 1/2"	9'-2 3/4"	8'-5 3/64"					
10	3'-0 7/64"	11'-9 25/32"	9'-5 11/16"					
11	2'-0 9/64"	11'-9 53/64"	9'-5 19/32"					
12	0'-5 15/16"	8'-11 29/32"	-3'-3 51/64"					
13	0'-5 29/32"	8'-0 1/32"	-3'-3 1/64"					
14	0'-5 55/64"	7'-0 3/16"	-3'-2 61/64"					
15	0'-5 53/64"	6'-0"	-3'-3 11/16"					
16	0'-5 53/64"	5'-0 1/8"	-3'-3 41/64"					
17	0'-5 31/32"	4'-0 5/32"	-3'-3 45/64"					
18	0'-5 3/4"	2'-11 63/64"	1'-1 33/64"					
19	0'-5 27/32"	1'-11 15/16"	1'-1 15/32"					
20	0'-5 53/64"	0'-11 61/64"	1'-1 9/16"					
21	1'-11 31/64"	-5'-5 53/64"	9'-9 27/32"					
22	3'-0 5/32"	-5'-9 19/32"	9'-5 51/64"					
23	4'-0 3/16"	-5'-9 39/64"	9'-5 43/64"					
24	5'-0 3/64"	-5'-5 49/64"	9'-9 7/8"					
25	6'-0 3/16"	-5'-9 9/16"	9'-5 21/32"					
26	7'-0 9/64"	-5'-9 9/16"	9'-5 45/64"					
27	8'-0 13/64"	-5'-9 33/64"	9'-5 41/64"					
28	9'-0 5/32"	-5'-9 19/32"	6'-5 17/32"					
29	10'-0- 3/16"	-5'-9 17/32"	9'-5 19/32"					
30	11'-0 1/64"	-5'-5 25/32"	9'-9 7/8"					
31	12'-0 3/64"	-5'-5 55/64"	9'-9 57/64"					
32	13'-0 5/32"	-5'-9 39/64"	9'-5 5/8"					
33	14'-0 3/64"	-5'-5 31/32"	9'-9 7/8"					
34	1'-6 1/32"	2'-8 5/64"	-3'-2 61/64"					
35	1'-5 61/64"	1'-8 1/16"	-3'-3 3/32"					

	NOZZ NO.	X	Y	Z
PB-2	P1 DOWEL	3'-3 1/16"	-0'-0 1/64"	- 0'-3 61/64"
	P2 PAD	———	———	- 0'-3 61/64"
	P3 DOWEL	12'-11 31/32"	-0'-0 1/64"	- 0'-4 3/64"
	P4 PAD	———	———	- 0'-4 1/16"
	P5 PAD	———	———	- 0'-3 59/64"
	P6 DOWEL	7'-0 7/64"	-2'-9 61/64"	- 0'-3 59/64"
	P7 PAD	———	———	- 0'-4 1/32"
	P8 DOWEL	16'-8 15/16"	-2'-9 31/32"	- 0'-4 1/64"
PB-1	P9 DOWEL	15'-2 25/32"	9'-10 29/64"	5'-6 35/64"
	P10 DOWEL	15'-2 49/64"	6'-2 1/32"	5'-6 41/64"
SUMP	P11 DOWEL	1'-5 15/16"	6'-0"	- 5'-9 31/64"
	P12 DOWEL	2'-5 59/64"	3'-11 7/8"	- 5'-9 15/16"
	P13 PAD	———	———	- 0'-7 11/16"
	P14 PAD	———	———	4'-7 7/64"
PB-1	A	17'-4 51/64"	6'-9 5/16"	7'-1 59/64"
	B	13'-5 49/64"	6'-3 9/32"	6'-6 1/8"
4. 28" PIPE	A	9'-1 21/64"	5'-11 49/64"	- 4'-4 29/64"
	B	7'-7 3/16"	8'-0 35/64"	5'-8 5/16"
	C	9'-1 23/64"	8'-0 17/32"	5'-8 7/16"
	D	5'-3 1/2"	9'-11 59/64"	5'-8 1/8"
	E	12'-3 13/64"	5'-10 61/64"	- 4'-4 31/64"
	F	7'-3 27/64"	6'-2 25/64"	3'-8 15/16"
SEE DETAIL 1	P15(F)	7'-8 33/64"	———	4'-5 1/32"
8. PB-2	C	UNK	UNK	UNK
	D	UNK	UNK	UNK
	E	15'-2 1/16"	1'-3 1/8"	0'-10 53/64"
	F	UNK	UNK	UNK
	G	UNK	UNK	UNK
	H	UNK	UNK	UNK
4.	36	8'-9"	2'-5"	-5 3/4"
4.	37	15'-0"	-5'-8"	8'-4"
4.	38	16'-0"	-5'-8"	8'-4"

IS:

NOZZLE POSITION

NOZZ NO.	X	Y	Z
1	17'-6 1/16"	11'-11 13/16"	9'-6 37/64"
2	11'-0 25/32"	10'-7 1/4"	9'-9 33/64"
2A	11'-0 3/16"	9'-3 29/32"	8'-4 1/64"
3	10'-0 11/64"	11'-9 25/32"	9'-5 7/16"
4	9'-0 5/32"	11'-9 13/16"	9'-5 15/32"
5	8'-0 3/16"	11'-9 13/16"	9'-5 1/2"
6	7'-1 3/8"	10'-6 11/32"	9'-10 9/32"
6A	7'-0 7/8"	9'-4 1/2"	8'-5 13/64"
7	6'-1 33/64"	10'-5 15/16"	9'-11"
7A	6'-1 7/32"	9'-4 7/16"	8'-5 1/32"
8	5'-0 3/16"	11'-9 23/32"	9'-5 17/32"
9	4'-0 1/32"	10'-6"	9'-9 29/32"
9A	4'-1 1/2"	9'-2 3/4"	8'-5 3/64"
10	3'-0 7/64"	11'-9 25/32"	9'-5 11/16"
11	2'-0 9/64"	11'-9 53/64"	9'-5 19/32"
12	0'-5 15/16"	8'-11 29/32"	-3'-3 51/64"
13	0'-5 29/32"	8'-0 1/32"	-3'-3 1/64"
14	0'-5 55/64"	7'-0 3/16"	-3'-2 61/64"
15	0'-5 53/64"	6'-0"	-3'-3 11/16"
16	0'-5 53/64"	5'-0 1/8"	-3'-3 41/64"
17	0'-5 31/32"	4'-0 5/32"	-3'-3 45/64"
18	0'-5 3/4"	2'-11 63/64"	1'-1 33/64"
19	0'-5 27/32"	1'-11 15/16"	1'-1 15/32"
20	0'-5 53/64"	0'-11 61/64"	1'-1 9/16"
21	1'-11 31/64"	-5'-5 53/64"	9'-9 27/32"
22	3'-0 5/32"	-5'-9 19/32"	9'-5 51/64"
23	4'-0 3/16"	-5'-9 39/64"	9'-5 43/64"
24	5'-0 3/64"	-5'-5 49/64"	9'-9 7/8"
25	6'-0 3/16"	-5'-9 9/16"	9'-5 21/32"
26	7'-0 9/64"	-5'-9 9/16"	9'-5 45/64"
27	8'-0 13/64"	-5'-9 33/64"	9'-5 41/64"
28	9'-0 5/32"	-5'-9 19/32"	6'-5 17/32"
29	10'-0- 3/16"	-5'-9 17/32"	9'-5 19/32"
30	11'-0 1/64"	-5'-5 25/32"	9'-9 7/8"
31	12'-0 3/64"	-5'-5 55/64"	9'-9 57/64"
32	13'-0 5/32"	-5'-9 39/64"	9'-5 5/8"
33	14'-0 3/64"	-5'-5 31/32"	9'-9 7/8"
34	1'-6 1/32"	2'-8 5/64"	-3'-2 61/64"
35	1'-5 61/64"	1'-8 1/16"	-3'-3 3/32"

	NOZZ NO.	X	Y	Z
PB-2	P1 DOWEL	3'-3 1/16"	-0'-0 1/64"	- 0'-3 61/64"
	P2 PAD	———	———	- 0'-3 61/64"
	P3 DOWEL	12'-11 31/32"	-0'-0 1/64"	- 0'-4 3/64"
	P4 PAD	———	———	- 0'-4 1/16"
	P5 PAD	———	———	- 0'-3 59/64"
	P6 DOWEL	7'-0 7/64"	-2'-9 61/64"	- 0'-3 59/64"
	P7 PAD	———	———	- 0'-4 1/32"
	P8 DOWEL	16'-8 15/16"	-2'-9 31/32"	- 0'-4 1/64"
PB-1	P9 DOWEL	15'-2 25/32"	9'-10 29/64"	5'-6 35/64"
	P10 DOWEL	15'-2 49/64"	6'-2 1/32"	5'-6 41/64"
SUMP	P11 DOWEL	1'-5 15/16"	6'-0"	- 5'-9 31/64"
	P12 DOWEL	2'-5 59/64"	3'-11 7/8"	- 5'-9 15/16"
	P13 PAD	———	———	- 0'-7 11/16"
	P14 PAD	———	———	4'-7 7/64"
PB-1	A	17'-4 51/64"	6'-9 5/16"	7'-1 59/64"
	B	13'-5 49/64"	6'-3 9/32"	6'-6 1/8"
4. 28" PIPE	A	9'-1 21/64"	5'-11 49/64"	- 4'-4 29/64"
	B	7'-7 3/16"	8'-0 35/64"	5'-8 5/16"
	C	9'-1 23/64"	8'-0 17/32"	5'-8 7/16"
	D	5'-3 1/2"	9'-11 59/64"	5'-8 1/8"
	E	12'-3 13/64"	5'-10 61/64"	- 4'-4 31/64"
	F	7'-3 27/64"	6'-2 25/64"	3'-8 15/16"
SEE DETAIL 1	P15(F)	7'-8 33/64"	———	4'-5 1/32"
8. PB-2	C	UNK	UNK	UNK
	D	UNK	UNK	UNK
	E	15'-2 1/16"	1'-3 1/8"	0'-10 53/64"
	F	UNK	UNK	UNK
	G	UNK	UNK	UNK
	H	UNK	UNK	UNK
4.	36	8'-9"	2'-5"	-5 3/4"
4.	37	15'-0"	-5'-8"	8'-4"
4.	38	16'-0"	-5'-8"	8'-4"
9.	41	0'-6"	5'-0"	1'-1 1/2"
9.	42	0'-6"	6'-0"	-0'-10 1/2"
9.	43	0'-6"	7'-0"	1'-4"

ENGINEERING CHANGE NOTICE CONTINUATION SHEET	1a. ECN–715004
	1b. Proj. T1P207

Document/Drawing No. H–2–99009	Sheet 2	Revision 0

WAS:

NOTES: (CONTINUED FROM SHEET 1)

4. NOZZLES C, 36, 37, AND 38 WERE MODIFIED OR INSTALLED PER H–2–99029 AND H–2–99030.

5. NOZZLE LOCATION TOLERANCE: NOZZLE C – ± 3/8" NOZZLES 36, 37, AND 38 – ± 1/16". ALL OTHER NOZZLES LOCATED TO ± 1/64".

6. THE SAMPLE CABINET NOZZLES (G, H, J, AND K) HAVE NO IDENTIFIABLE LOCATION DIMENSIONS.

7. REFERENCE ELEVATION IS 692'–6" Z DIRECTION IS ABOVE (OR BELOW, INDICATED BY A "–" SIGN PRECEDING THE NUMBER).

8. FOR PB–2, UNK REPRESENTS DIMENSIONS THAT ARE CURRENTLY UNKNOWN AND REQUIRE SURVEYING.

IS:

NOTES: (CONTINUED FROM SHEET 1)

4. NOZZLES C, 36, 37, AND 38 WERE MODIFIED OR INSTALLED PER H–2–99029 AND H–2–99030.

5. NOZZLE LOCATION TOLERANCE: NOZZLE C – ± 3/8" NOZZLES 36, 37, AND 38 – ± 1/16". ALL OTHER NOZZLES LOCATED TO ± 1/64".

6. THE SAMPLE CABINET NOZZLES (G, H, J, AND K) HAVE NO IDENTIFIABLE LOCATION DIMENSIONS.

7. REFERENCE ELEVATION IS 692'–6" Z DIRECTION IS ABOVE (OR BELOW, INDICATED BY A "–" SIGN PRECEDING THE NUMBER).

8. FOR PB–2, UNK REPRESENTS DIMENSIONS THAT ARE CURRENTLY UNKNOWN AND REQUIRE SURVEYING.

9. NOZZLES 41, 42, AND 43 LOCATIONS ARE PROVIDED FOR TARGET INSTALLATION PURPOSES. FOLLOWING THEIR INSTALLATION A LASER SCAN SURVEY WILL BE PERFORMED AND THE ACTUAL NOZZLE LOCATIONS RELATIVE TO THE DATUM WILL BE UPDATED VIA DCN–715033.

ENGINEERING CHANGE NOTICE CONTINUATION SHEET	1a. ECN–715004 1b. Proj. T1P207

Document/Drawing No. H–2–99029 Sheet 1 Revision 2

WAS:

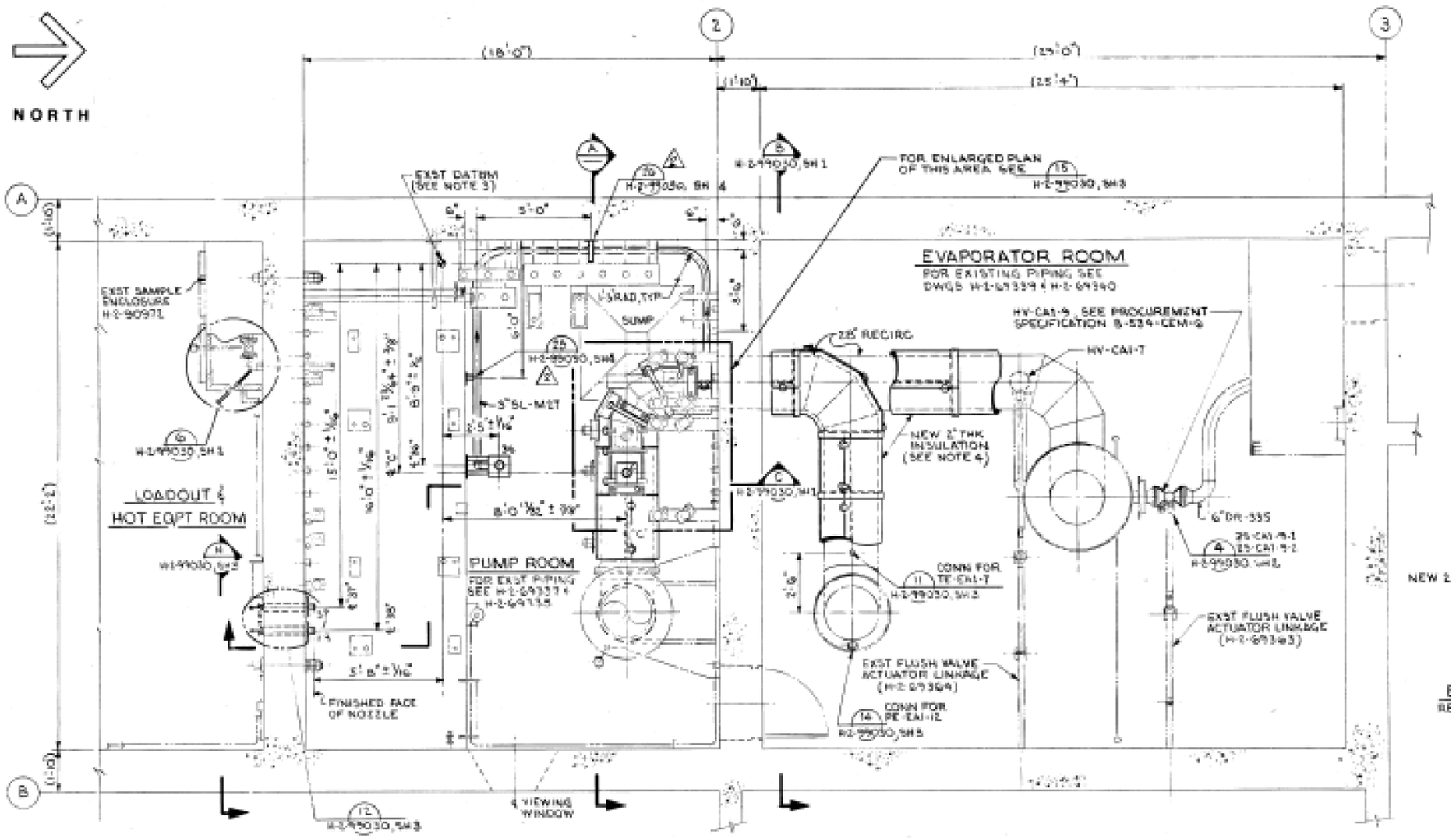

ENGINEERING CHANGE NOTICE CONTINUATION SHEET	1a. ECN-715004 1b. Proj. T1P207

Document/Drawing No. H-2-99029 Sheet 1 Revision 2

IS: ECN NOTE: DRAFTER TO ASSIGN NEXT AVAILABLE SECTION AND SHEET NUMBER UPON INCORPORATION. DISTANCE SHOWN FROM SOUTHWEST EXTERIOR CORNER OF 242-A EVAPORATOR IS FOR FIELD INSTALLATION AID ONLY (DO NOT INCORPORATE).

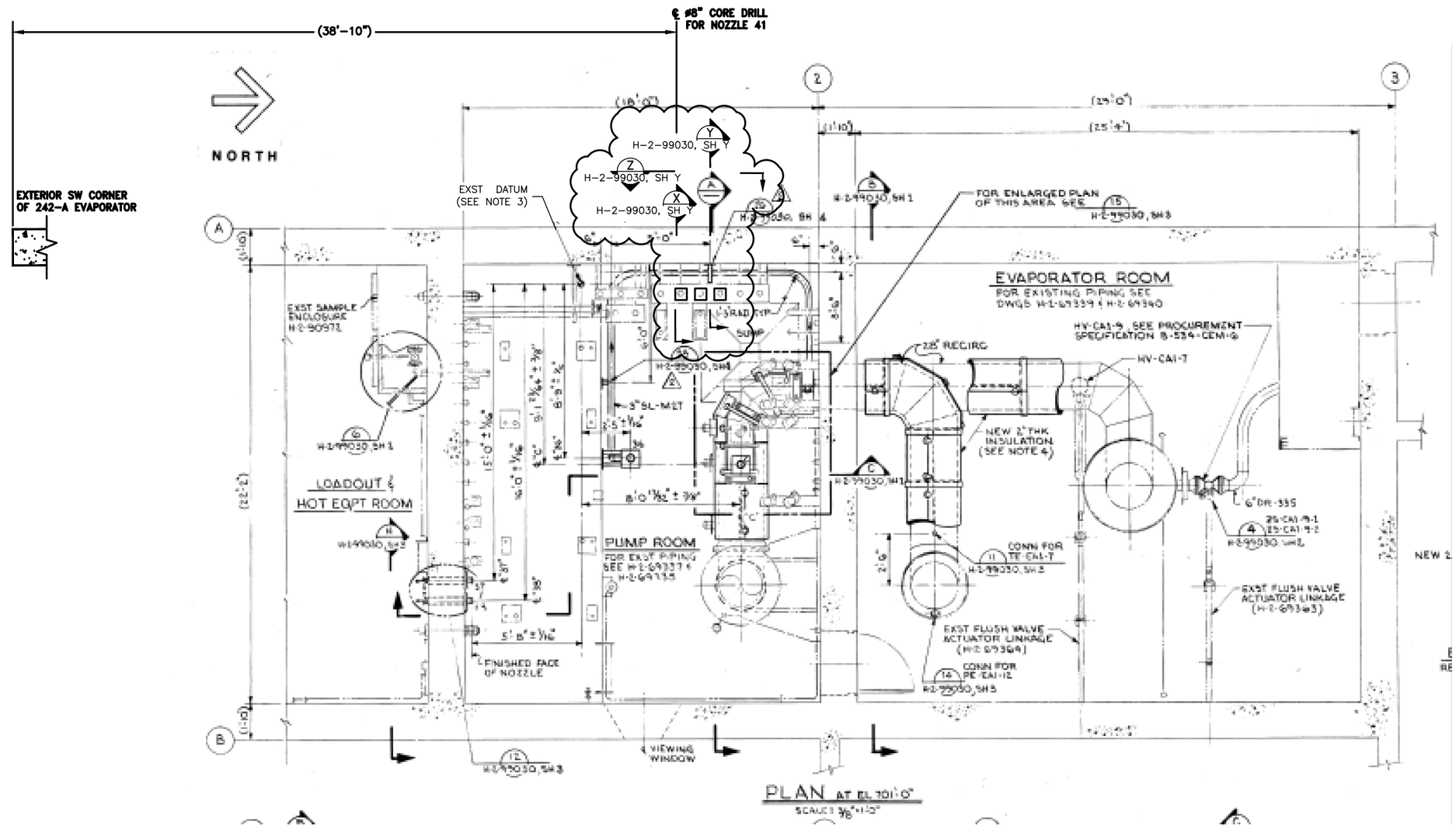

ENGINEERING CHANGE NOTICE CONTINUATION SHEET	1a. ECN–715004 1b. Proj. T1P207

Document/Drawing No. H–2–99030 Sheet 1 Revision 3

WAS:

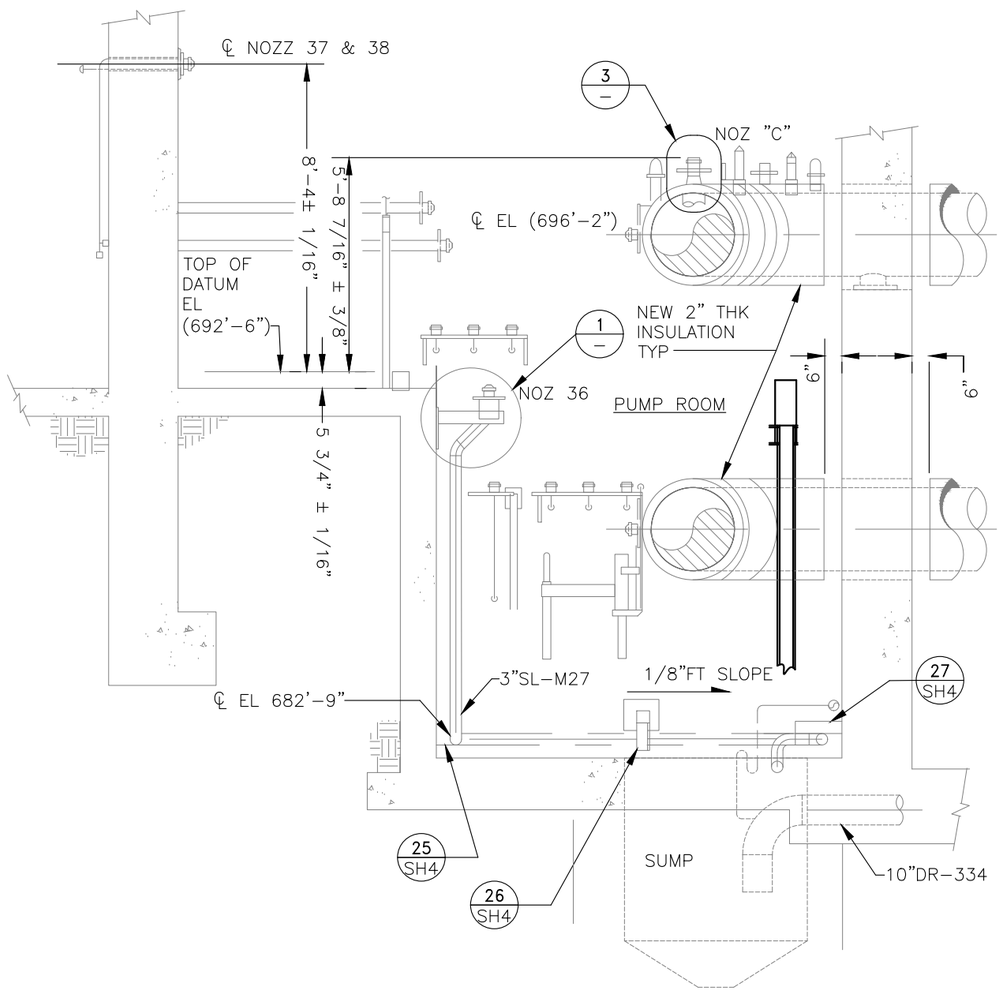

C SECTION
H–2–99029 SCALE: 3/8"=1'–0"

IS:

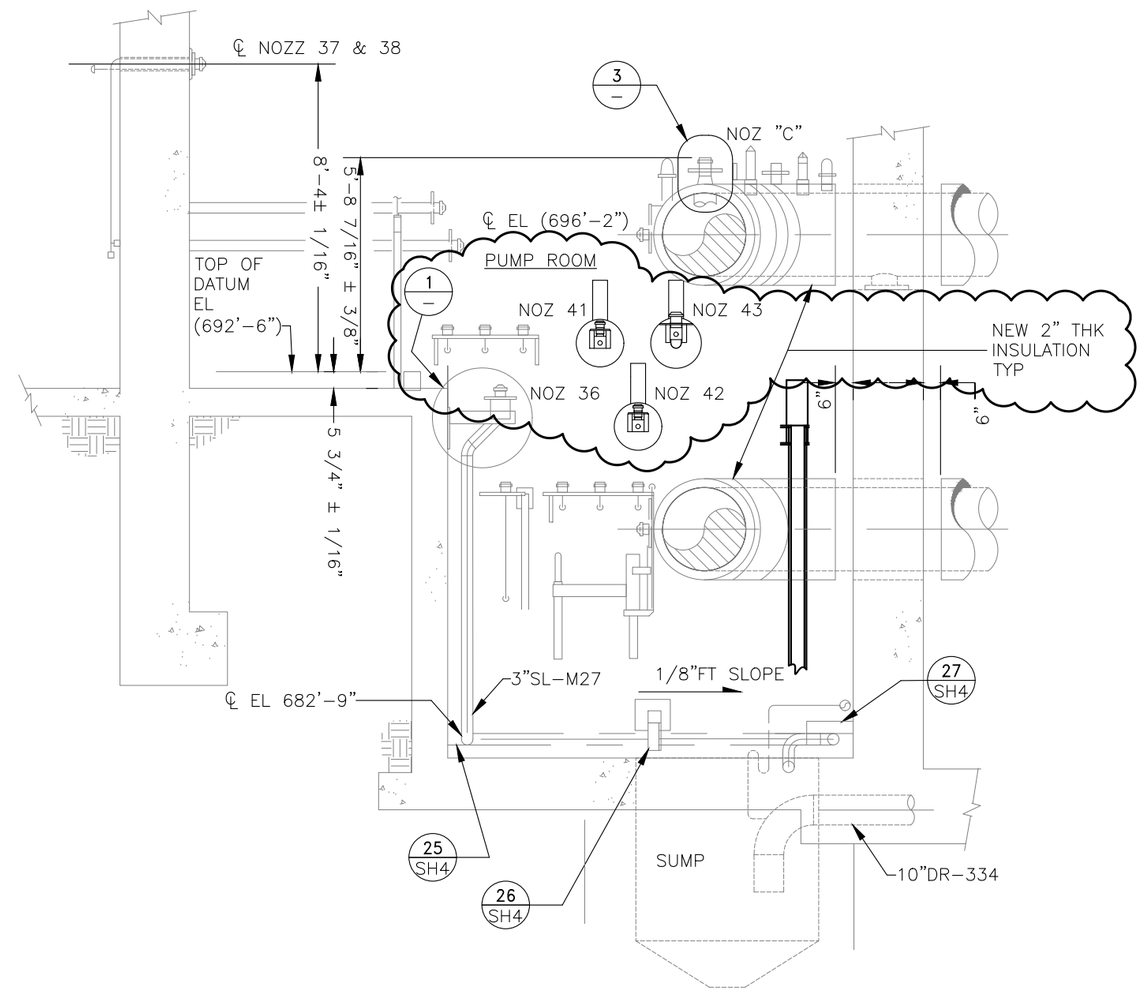

C SECTION
H–2–99029 SCALE: 3/8"=1'–0"

ENGINEERING CHANGE NOTICE CONTINUATION SHEET	1a. ECN–715004 1b. Proj. T1P207

Document/Drawing No. H–2–99030 Sheet 1 Revision 3

ECN NOTE: AFTER FINAL INSTALLATION OF WALL NOZZLE ASSEMBLIES INSTALL TEMPORARY COVER (E.G. 6–INCH DIAMETER PVC PIPE SLEEVE WITH CAP) OVER THE OPEN END OF THE ENCASEMENT PIPE TO PREVENT DEBRIS FROM ENTERING PIPE. SECURE COVER TO ENCASEMENT WITH LAYERS OF PLASTIC SHIPPING WRAP OR SIMILAR. ALTERNATE METHODS OF COVERING THE ENCASEMENT PIPE SHALL BE APPROVED BY TOC ENGINEERING.

ADD: ECN NOTE: DRAFTER TO ASSIGN NEXT AVAILABLE DETAIL AND SECTION NUMBERS UPON INCORPORATION.
ECN NOTE: REFERENCE COORDINATE PROVIDED TO SUPPORT FIELD INSTALLATION (DO NOT INCORPORATE).

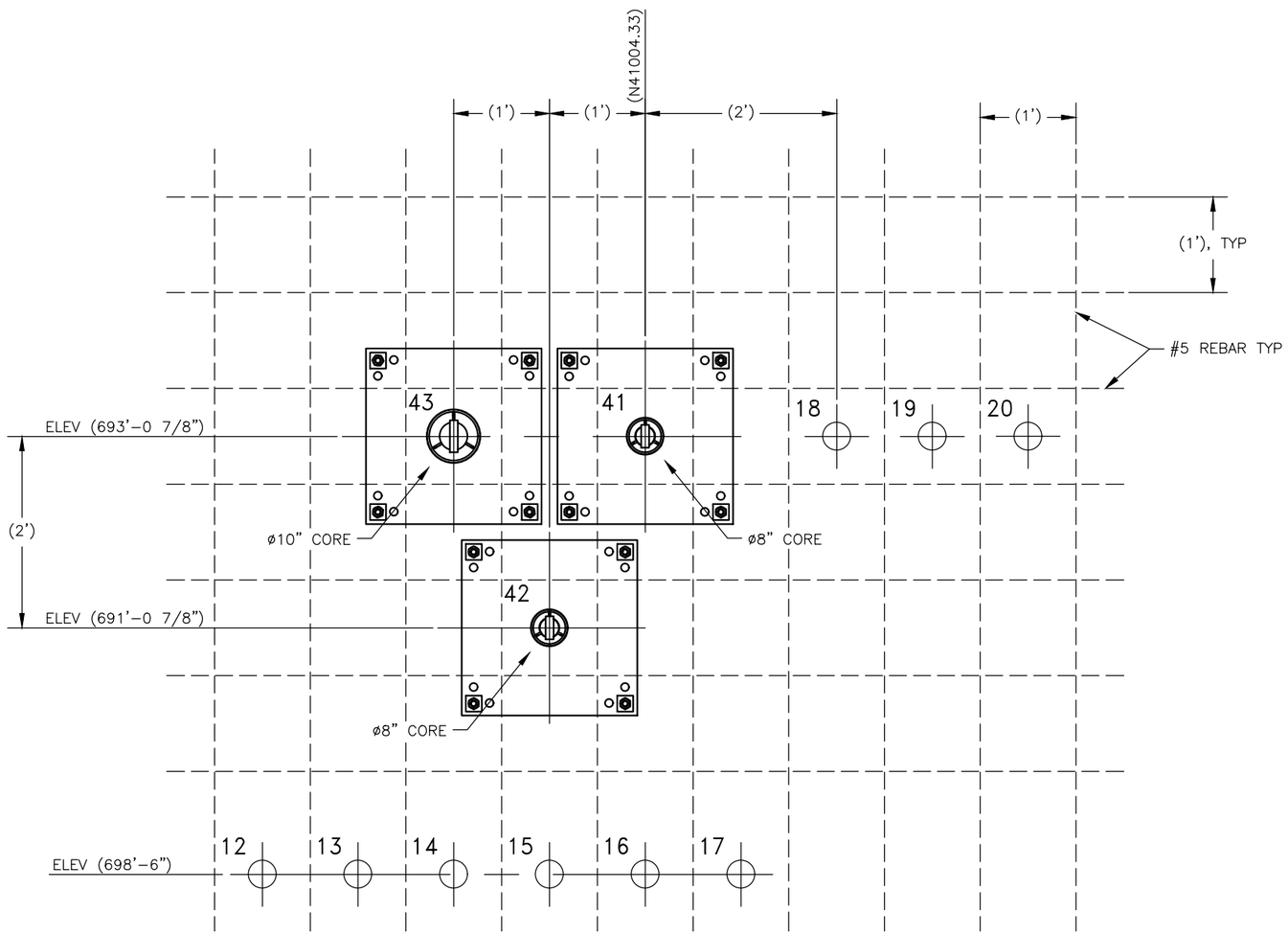

Z SECTION
H–2–99029 SCALE: 1/8

NOTE: REBAR PATTERN DEPICTED FOR INFORMATION ONLY. FINAL LOCATIONS OF NOZZLE 41, 42 AND 43 ASSEMBLIES TO BE FIELD LOCATED RELATIVE TO THE AS–SCANNED REBAR LOCATIONS AND RELATIVE LOCATION TO PIPING FOR EXISTING NOZZLES 14, 15, 16 AND 18. INSTALL ONE ANCHOR BOLT AT EACH CORNER LOCATION OF THE WALL MOUNTING PLATE. ALTERNATIVE HOLES ARE PROVIDED TO ENSURE REBAR IS NOT CUT DURING THE INSTALLATION OF MOUNTING PLATE ANCHORS.

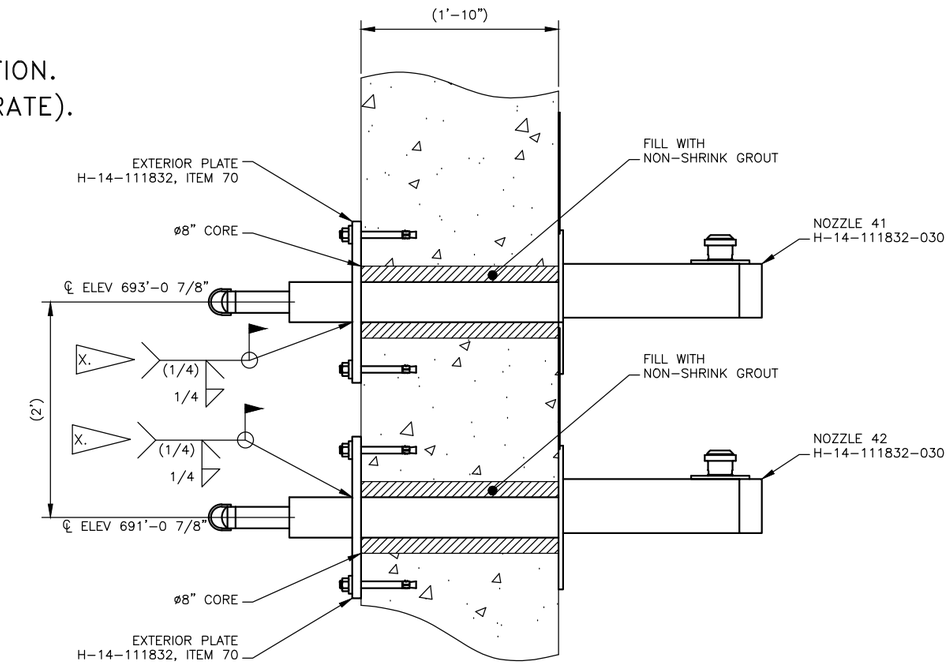

X SECTION
H–2–99029 SCALE: 1/8

NOTE: BACKGROUND NOZZLE 43 ASSEMBLY REMOVED FOR CLARITY.

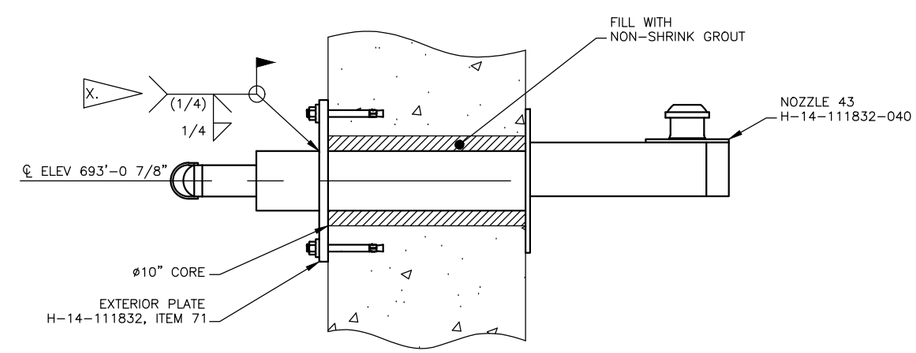

Y SECTION
H–2–99029 SCALE: 1/8

X. WELD AND INSPECT PER ASME B31.3–2016 CATEGORY NORMAL FLUID SERVICE. WELDS SHALL BE VT ON FINAL PASS.

ENGINEERING CHANGE NOTICE CONTINUATION SHEET	1a. ECN-715004 1b. Proj. T1P207

Document/Drawing No. H-14-020802 Sheet 6 Revision 11

WAS:

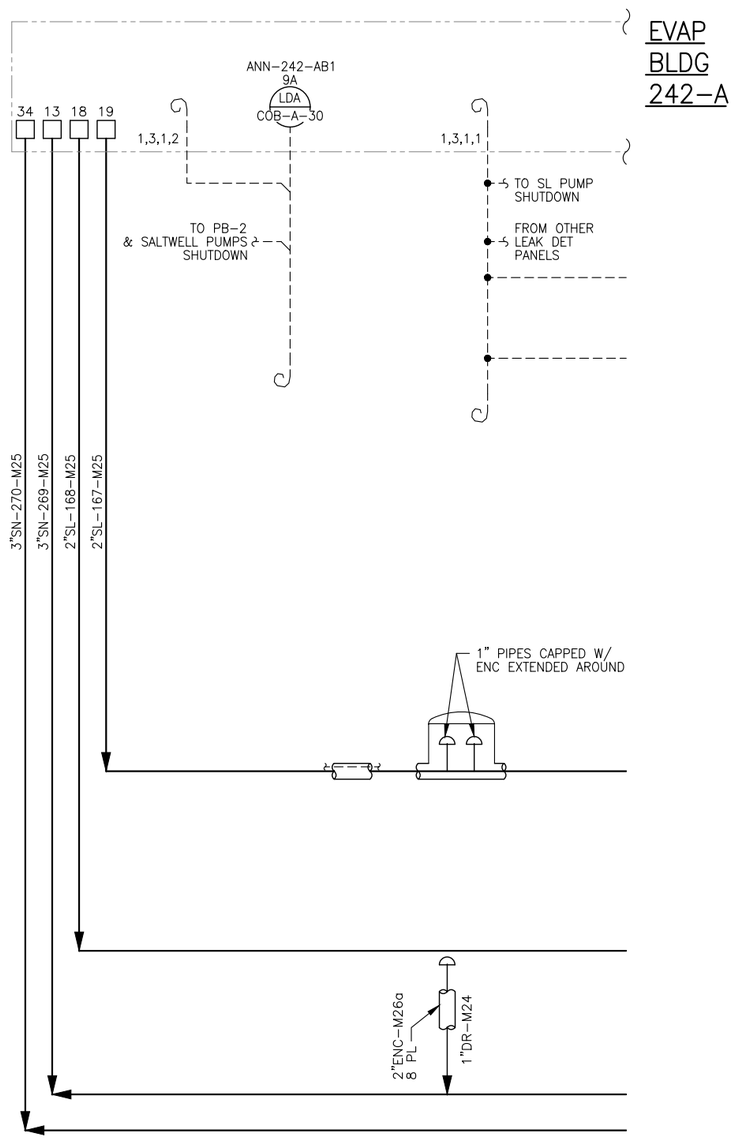

IS:

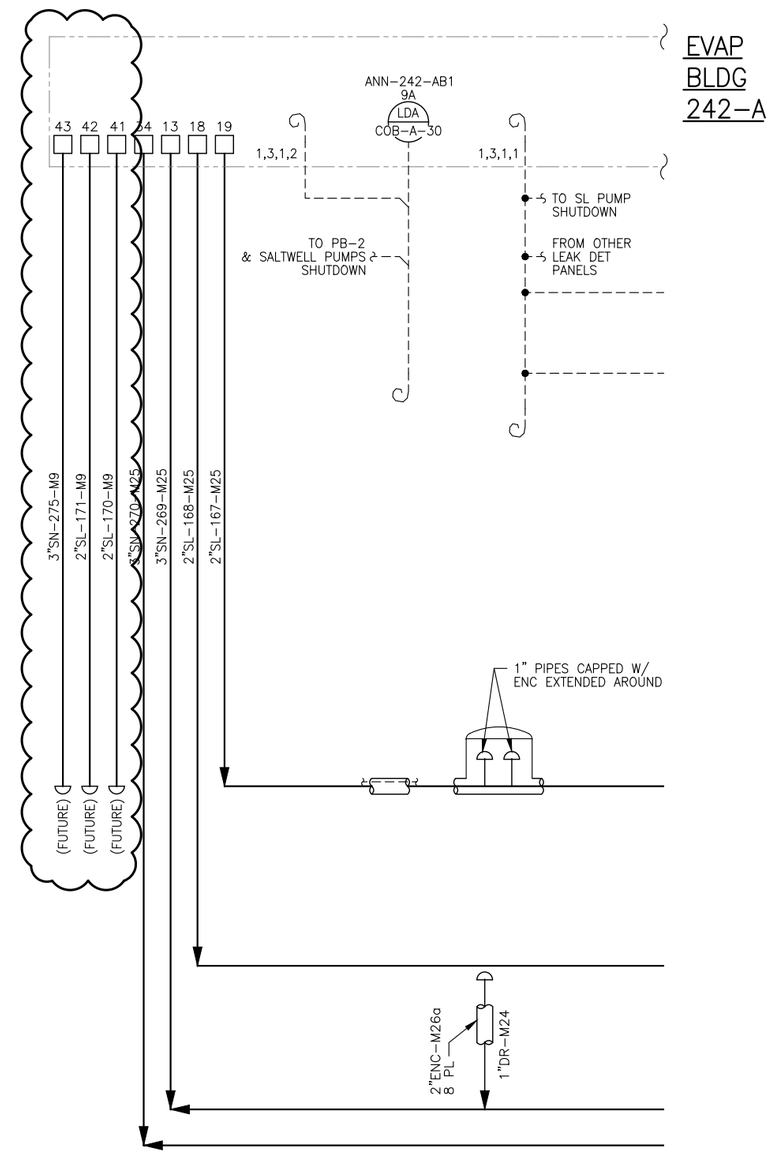

ENGINEERING CHANGE NOTICE CONTINUATION SHEET	1a. ECN– 715004
	1b. Proj. T1P207

Document/Drawing No. H–14–107346	Sheet 3	Revision 43

WAS: ECN NOTE: INCORPORATES CHANGES MADE BY ECN–715003 REV. 01

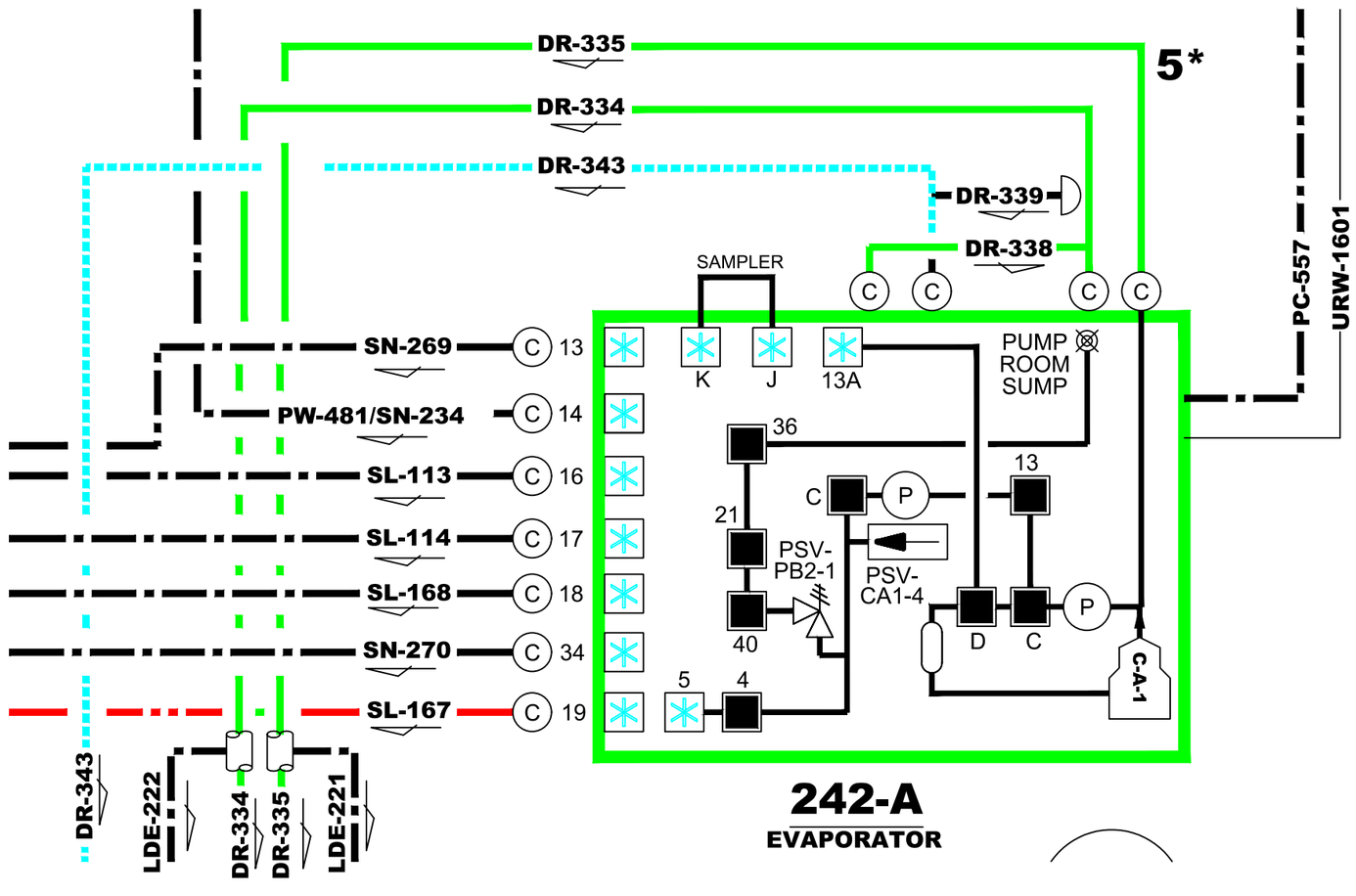

ENGINEERING CHANGE NOTICE CONTINUATION SHEET	1a. ECN– 715004 1b. Proj. T1P207

Document/Drawing No. H–14–107346	Sheet 3	Revision 43

IS:

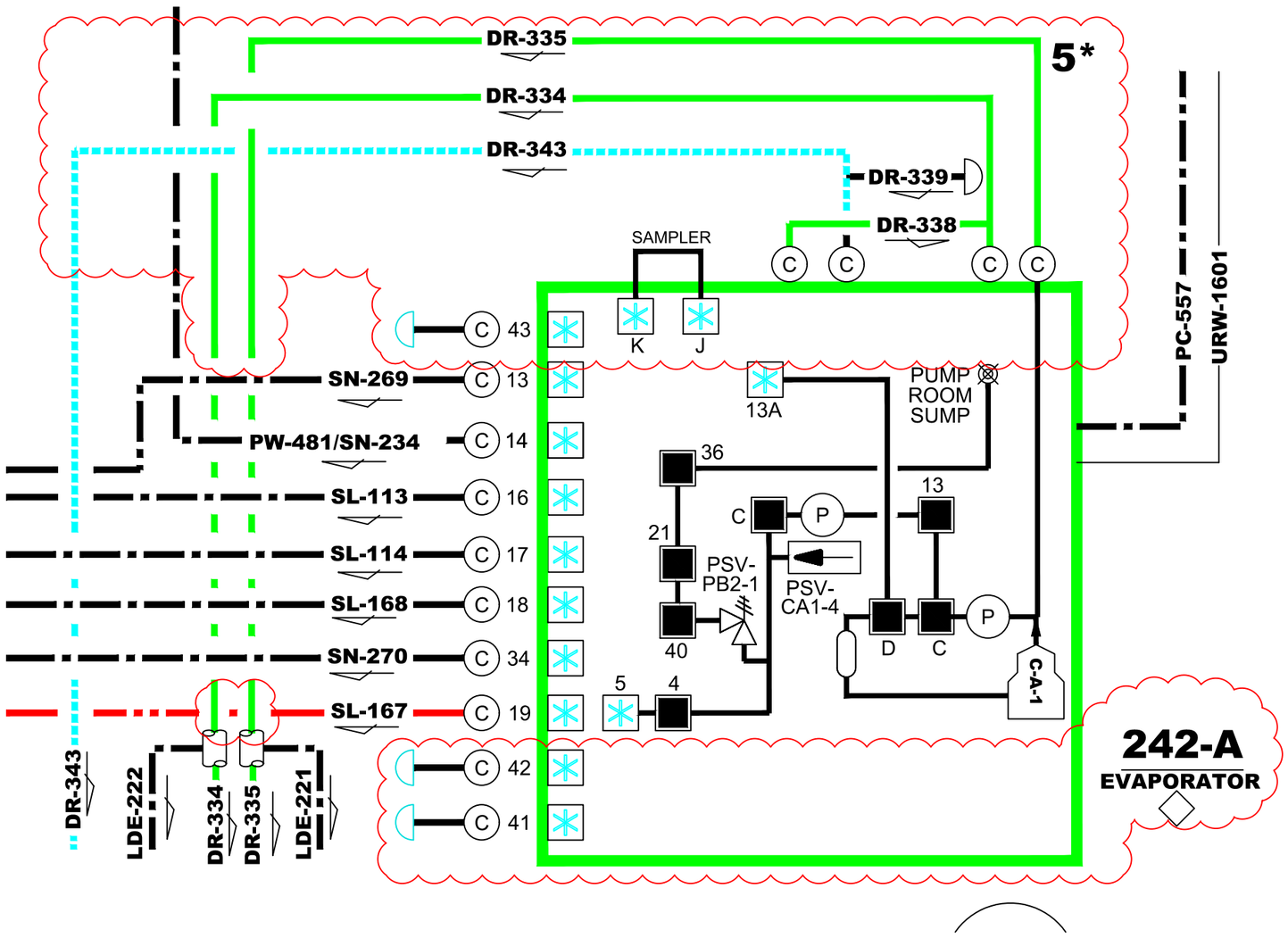

ENGINEERING CHANGE NOTICE

Prepared For the U.S. Department of Energy, Assistant Secretary for Environmental Management
By Washington River Protection Solutions, LLC., PO Box 850, Richland, WA 99352
Contractor For U.S. Department of Energy, Office of River Protection, under Contract DE-AC27-08RV14800

TRADEMARK DISCLAIMER: Reference herein to any specific commercial product, process, or service by trade name, trademark, manufacturer, or otherwise, does not necessarily constitute or imply its endorsement, recommendation, or favoring by the United States government or any agency thereof or its contractors or subcontractors. Printed in the United States of America.

Release Stamp

DATE: Aug 11,2020 HANFORD RELEASE

1a. **ECN No:** ECN-715005 **Rev.** 00	1b. **Project Number:** T1P207 ☐N/A
2. **Title:** 242-A EVAPORATOR PUMP ROOM JUMPER INSTALLATION (41 TO 5 AND 43 TO 13A)	
3. **WA or Redline ECN:** ☐ WA ☐ REDLINE ☒ N/A	4. **Temporary Modification:** ☐ Yes ☒ No
5. **Design Type:** I	6. **Design Verification Required:** ☒Yes ☐No
7. **Safety Classification:** ☐SC ☐SS ☒GS ☐N/A	
8. **USQ Number:** EV-20-0617 ☐ N/A	9. **PrHA Number** PrHA-57384 **Rev.** 00 ☐ N/A

Workflow Approval Status: Submitted for USQ
Clearance Review Restriction Type: undefined

10. **Trend Codes**

Cause	Commodity	Discipline Driver
Initial Design Release	Mechanical Equipment	Mechanical

11. **Design Authority Designator**

PRJ - 242-A TRANSFER LINE REPLACEMENT PROJECT

12. **Approvals**

Title	Name	Signature	Date
Design Authority	Engeman, Jason K	*Engeman, Jason K*	04/29/2020
Design Verifier	Harrington, James P	*Harrington, James P*	03/19/2020
Checker	Harrington, James P	*Harrington, James P*	03/19/2020
Document Control Approval	Hood, Evan	*Hood, Evan*	08/11/2020
Environmental Protection	Heninger, Steve D	*Heninger, Steve D*	03/23/2020
Originator	Lang, Ryan D	*Lang, Ryan D*	03/18/2020
Quality Assurance	Harper, Jerry G	*Harper, Jerry G*	03/24/2020
Radiological Control	Franz, James A	*Franz, James A*	03/23/2020
Responsible Engineering Manager	Huntington, Matthew R	*Huntington, Matthew R*	04/30/2020
USQ Evaluator	Carlstrom, Richard	*Carlstrom, Richard*	04/30/2020
Waste Transfer Engineering	Moss, Hannah C	*Moss, Hannah C*	03/23/2020

13. **Problem**

Recent pneumatic testing on the encasement of SL-167 has determined that it cannot maintain pressure, and therefore cannot be used to compliantly transfer waste. Recent visual inspection of SL-168 (the back-up slurry line) and pneumatic testing have identified additional work to be performed in order to attempt to place the line back into service. Until new slurry transfer lines have been installed and placed into service, the 242-A Evaporator cannot slurry out concentrated waste to tank farms to allow waste volume reduction. To ensure long-term success of the evaporator, a replacement feed line will also be installed.

New wall nozzle assemblies (41, 42 and 43) were installed at the 242-A Evaporator Pump Room. New transfer lines (2"SL-170, 2"SL-171 and 3"SN-275) were installed between the 242-A Evaporator and double shell tank 241-AW-102.

The installation of new jumper assemblies is needed to connect the 242-A Evaporator with tank 241-AW-102 to support waste feed and slurry return operations.

14. **Solution**

Install new jumper assembly [43 To 13A] to allow receipt of supernate from the AW-02E Feed Pump Pit via the newly installed 3"SN-275 transfer line.

Install new jumper assembly [41 To 5] to allow slurry return to the AW-02A Pump Pit via the newly installed 2"SL-170 transfer line.

15. **Analysis**

Refer to RPP-CALC-63213 for the ASME B31.3 analysis for the new [41 To 5] and [43 To 13A] jumper assemblies. Refer to RPP-CALC-63234 for the Jumper Supporting analysis. Refer to RPP-SPEC-63237 for the Design Requirements Compliance Matrix (DRCM) for the [41 To 5] and [43 To 13A] jumper assemblies.

RYAN D. LANG STATE OF WASHINGTON 48191 REGISTERED PROFESSIONAL ENGINEER 8/11/2020

16. **Description of Change**

Design verification performed in accordance with Columbia Energy & Environmental Services Procedure CE-ES-3.3.

ENGINEERING CHANGE NOTICE

ECN No: ECN-715005 **Rev.** 00

16. **Description of Change**

Inspection/Testing: Testing has been performed as described in the associated jumper assembly drawings. Perform an In-Service leak check to ensure the PUREX connector heads on the new jumper assemblies are properly connected. The In-Service leak check can be performed at any time following the installation, but must be completed prior to the new jumpers being used for a waste transfer.

H-2-98988 Sheet 2; Update P&ID to reflect the installation of the new [43 To 13A] jumper assembly, changes as shown on page 6.

H-2-98989 Sheet 1; Update P&ID to reflect the installation of the new [41 To 5] jumper assembly, changes as shown on page 7.

H-2-99009 Sheet 1; Update Jumper Schedule table to reflect the installation of the new [41 To 5] and [43 To 13A] jumpers, Update plan view to show the new [41 To 5] and [43 To 13A] jumpers installed, changes as shown on pages 8, 9 and 10.

H-14-107346 Sheet 3; Update to reflect the installation of new [41 To 5] and [43 To 13A] jumper assemblies, changes as shown on page 11.

17. **Work Package Number(s)**

TBD

18. **TBDs or Holds** ☒N/A

19. **Related Structures, Systems, and Components**

a. **Related Building/Facilities** ☐N/A	b. **Related Systems** ☐N/A	c. **Related Equipment ID Nos. (EIN)** ☐N/A
242-A	241-WT 242A 242A-SL 242A-SN	242A-WT-J-[41 TO 5] 242A-WT-J-[43 TO 13A]

20. **Engineering Drawings to be Changed** Does change affect the Electronic Routing Board? ☒

Drawing Number	Rev.	Title
H-14-107346 SH 003	43	DST WASTE TRANSFER PIPING DIAGRAM
H-2-98988 SH 002	21	P&ID EVAP RECIRC SYSTEM
H-2-98989 SH 001	29	P&ID SLURRY SYSTEM
H-2-99009 SH 001	05	PIPING JUMPER ARRANGEMENT PUMP ROOM

21. **Related Modification Traveler** ☐N/A

MT-50400

22. **Related Documents** ☐N/A

Document Number	Rev.	Title
RPP-CALC-63213	00	ASME B31.3 Analyses of the 41 To 5 and 43 To 13A Jumpers for the 242-A Evaporator Pump Room
RPP-CALC-63214	00	242-A Evaporator Pump Room Jumpers Supporting Analyses
RPP-SPEC-63237	00	242-A Evaporator Pump Room Design Requirements Compliance Matrix for the 41 To 5 and 43 To 13A Jumper Assemblies

23. **Distribution**

Name	Organization
Anderson, Ladd L	ELECTRICAL ENGINEERING
Atterbury, Brittney M	WASTE STORAGE & TECH SUPPORT
Balint, Greg G	242-A EVAPORATOR ENGINEERING
Becker, Brent T	COGNIZANT SYSTEM ENGINEERING
Blaak, Todd M	WASTE TRANSFER ENGINEERING
Conner, John M	PROD OPERATIONS PROCESS ENGRNG
Engeman, Jason K	TANK FARM PROJECTS ENGINEERING
Everett, Brian K	WASTE TRANSFER PLANNING MGMT
Foster, Jim	242-A/AW/ETF OPERATIONS
Franz, James A	TFP RADCON
Griffin, Peter W	TANK FARM PROJECTS ENGINEERING
Harper, Jerry G	AUDITS & ASSESSMENTS QA
Harrington, James P	
Heninger, Steve D	RETRVL & CLOSURE/PROJ ENV CMPL
Huntington, Matthew R	TANK FARM PROJECTS ENGINEERING
Huntington, Nikki L	COGNIZANT SYSTEM ENGINEERING
Johnson, Brian A	242-A/AW OPERATIONS

ENGINEERING CHANGE NOTICE	**ECN No:** ECN-715005 **Rev.** 00

23. **Distribution**

Name	**Organization**
Klages, Deanna L	CLOSURE & INTERIM MEASURES
Lang, Ryan D	
May, Dustin R	TFP PROJECT MANAGEMENT
Moss, Hannah C	WASTE TRANSFER ENGINEERING
Smith, Gregory E	TANK FARM PROJECTS ENGINEERING

Columbia Energy AND ENVIRONMENTAL SERVICES

Design Verification Checklist

Doc. Number	Rev.	Title
ECN-715005	00	242-A Evaporator Pump Room Jumper Installation (41 To 5, 43 To 13A)

Verification Method (Check One)

☒ Review ☐ Alternate Calculation ☐ Qualification Testing

Verification Results

Yes	No	NA	
☒	☐	☐	Design inputs correctly selected and cited and correctly incorporated.
☒	☐	☐	Input data were checked for consistency with original source information.
☐	☐	☒	Design inputs for interfacing organizations are specified
☐	☐	☒	Necessary assumptions are explicit, adequately described and supported.
☐	☐	☒	Unverified assumptions (requiring verification) are clearly identified.
☐	☐	☒	Analytical and technical approaches and results are reasonable and appropriate.
☐	☐	☒	The version or revision of each reference is cited
☐	☐	☒	Design output is reasonable for design inputs
☐	☐	☒	Results and conclusions address all points in the purpose.
☐	☐	☒	Conclusions are consistent with analytical results and applicable limits.
☒	☐	☐	Suitable materials, parts, processes, and inspection and testing criteria specified
☒	☐	☐	All comments have been adequately addressed and dispositioned
☐	☐	☒	Calculations are sufficiently detailed such that a technically qualified person could reproduce the calc.
☐	☐	☒	Design method(s) are appropriately used and documented.
☐	☐	☒	Computer Program(s) are appropriately used and results support design.
☐	☐	☒	For pre-verified computer programs the V&V document is referenced and specific computer used for the calculation is identified

Ensure calculations that use software include a paper printout, microfiche, CD-ROM, or other electronic file of the input data and identification to the computer, computer codes, and versions used, or provide alternate documentation to uniquely and clearly identify the exact coding and execution process.

Checker Name	Signature	Date
JP Harrington		3/18/20

CE-ES-3.3-F1, 10/20/14

Washington River Protection Solutions

MODIFICATION QUALITY INSPECTION PLAN (MQIP)

ECN No.: 715005 **Rev No.:** 00

INSPECTION/TEST No. 1

Description of Inspection/Test:
Gasket condition and Retainer ring tightness check

Inspection/Test Basis:	Supporting Documentation:
Engineering Best Practice	H-2-32420/H-2-32430/RPP-14541

Method of Inspection/Test:	Acceptance Criteria/Tolerances:	Sample Size/Plan:
Visual	Gasket Condition: No damage. Tightness Check: Retainer ring cannot be loosened or further rotated by hand	100%

Inspection/Test Organization: QC ☒ Witness ☐ Hold

INSPECTION/TEST No. 2

Description of Inspection/Test:
Ensure connectors on the 41 To 5 Jumper Assembly are free of packing material or blockages

Inspection/Test Basis:	Supporting Documentation:
Engineering Best Practice	H-14-111834

Method of Inspection/Test:	Acceptance Criteria/Tolerances:	Sample Size/Plan:
Visual	No debris	100%

Inspection/Test Organization: QC ☒ Witness ☐ Hold

"ADD SECTION"

INSPECTION/TEST No. 3

Description of Inspection/Test:
Ensure connectors on the 43 To 13A Jumper Assembly are free of packing materials and blockages

Inspection/Test Basis:	Supporting Documentation:
Engineering Best Practice	H-14-111835

Method of Inspection/Test:	Acceptance Criteria/Tolerances:	Sample Size/Plan:
Visual	No debris	100%`

Inspection/Test Organization: QC ☒ Witness ☐ Hold

☒

ENGINEERING CHANGE NOTICE CONTINUATION SHEET	1a. ECN-715005 1b. Proj. T1P207

Document/Drawing No. H-2-98988 Sheet 2 Revision 21

WAS: ECN NOTE: INCORPORATES CHANGES MADE BY ECN-715003, ECN-715004 AND ECN-715006

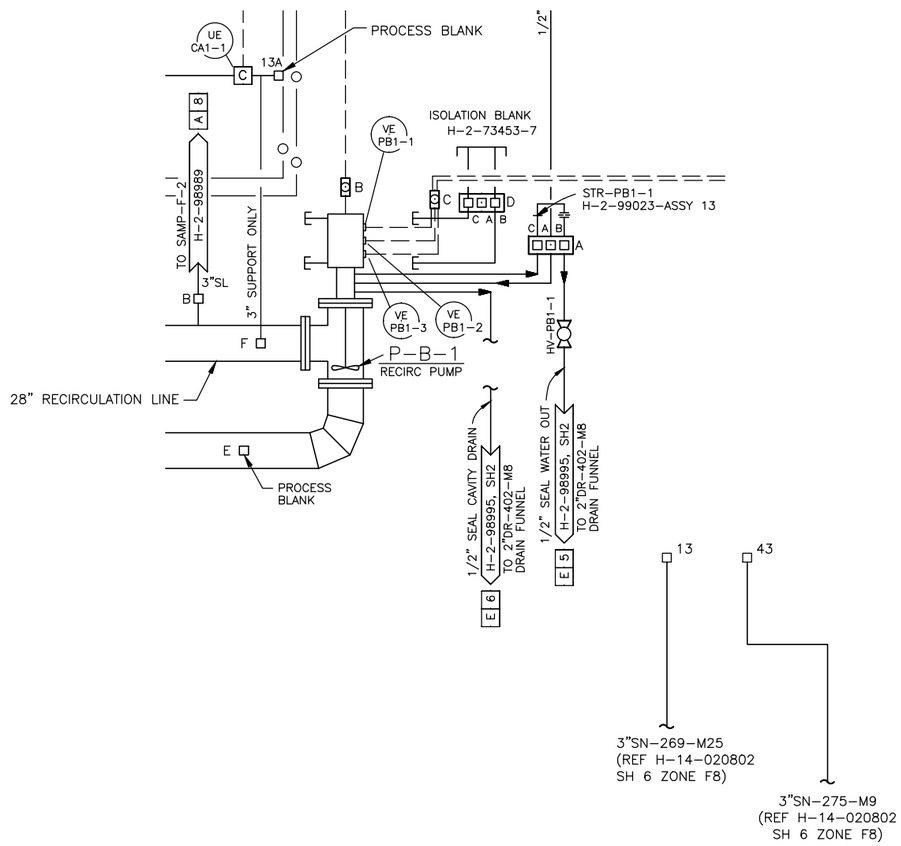

IS:

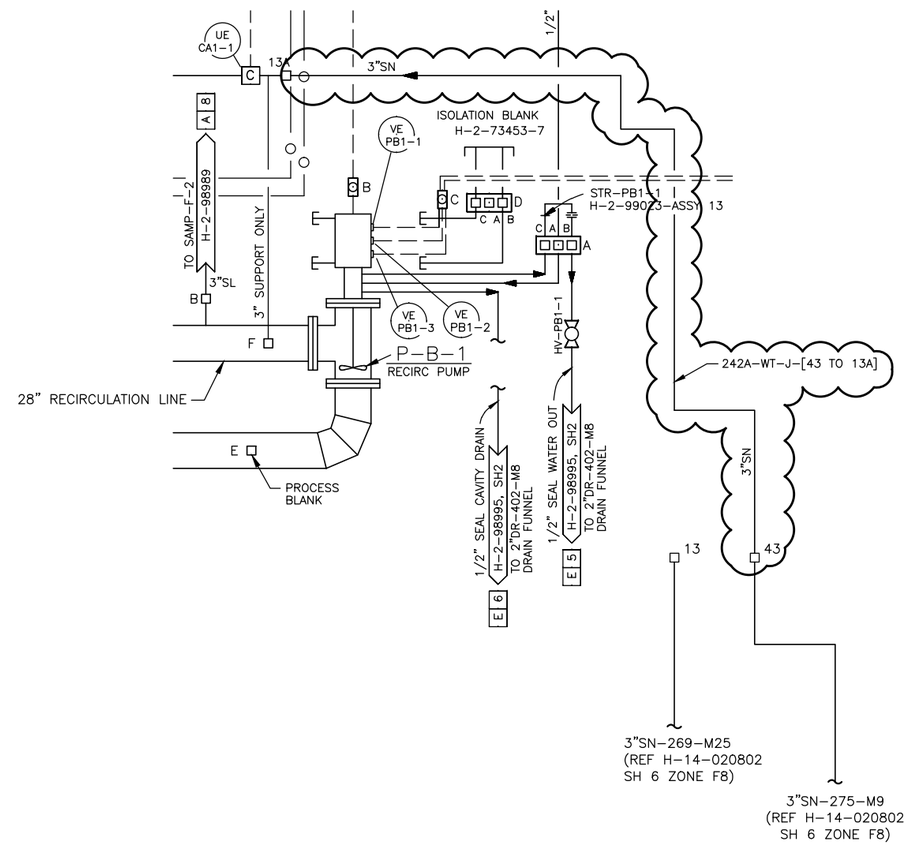

ENGINEERING CHANGE NOTICE CONTINUATION SHEET	1a. ECN– 715005 1b. Proj. T1P207

Document/Drawing No. H–2–98989 Sheet 1 Revision 29

WAS: ECN NOTE: INCORPORATES CHANGES MADE BY ECN–715004 AND ECN–715006 IS:

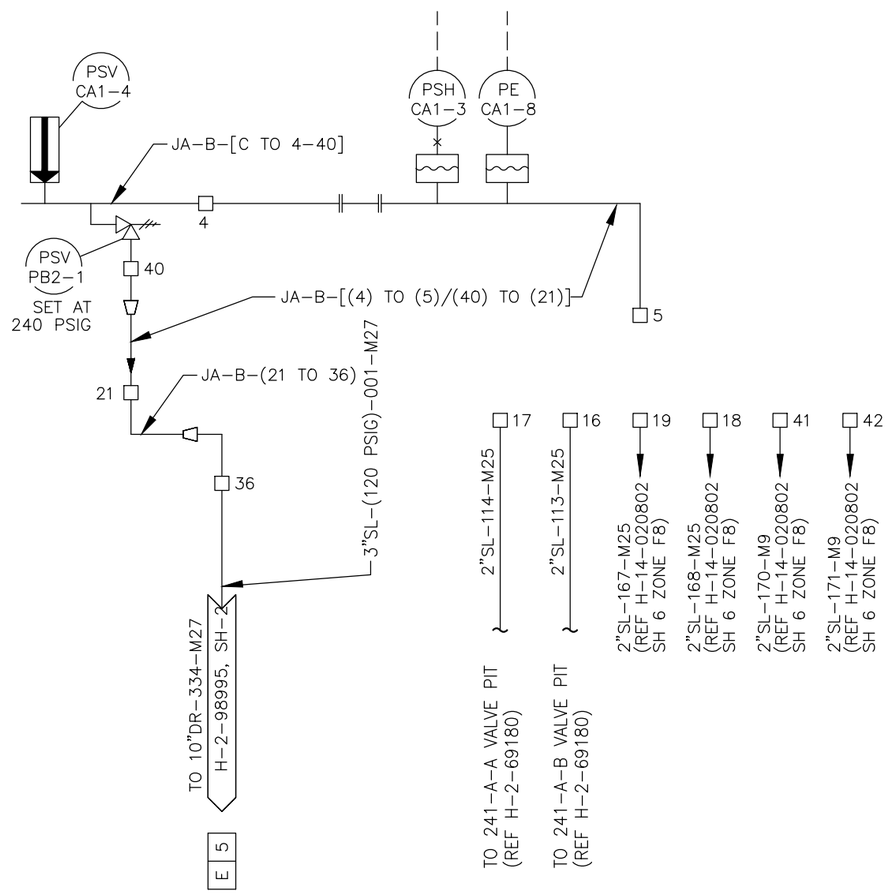

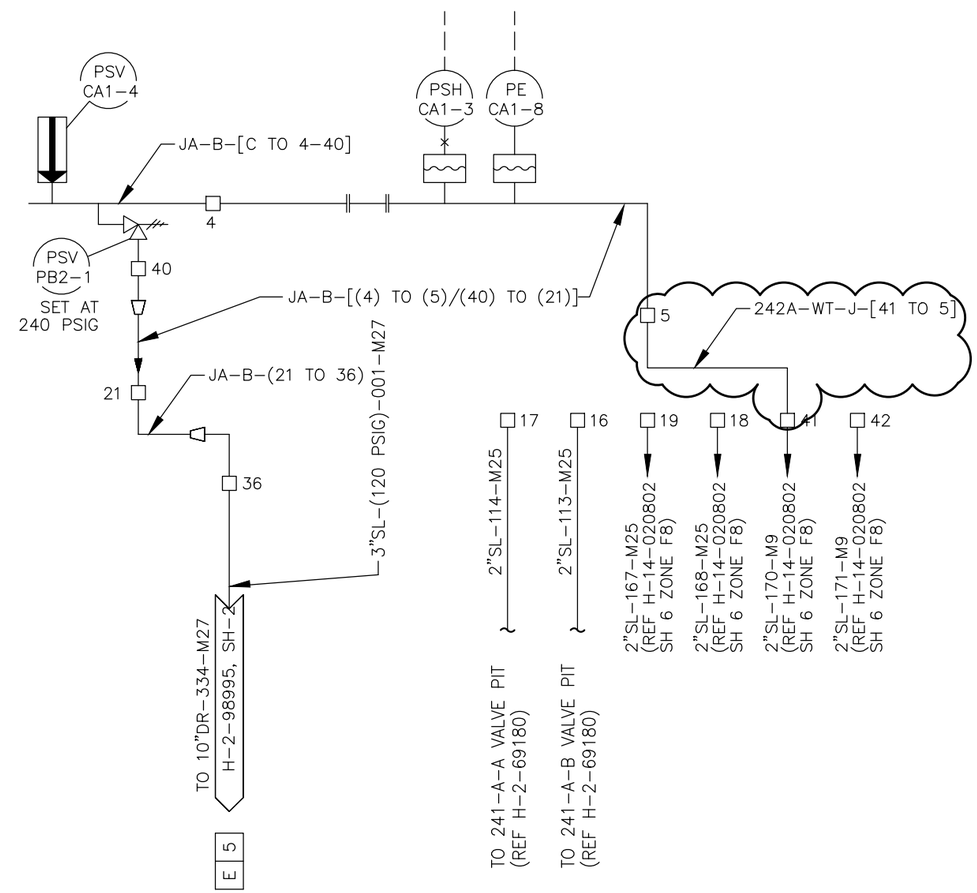

ENGINEERING CHANGE NOTICE CONTINUATION SHEET	1a. ECN– 715005 1b. Proj. T1P207

Document/Drawing No. H–2–99009 Sheet 1 Revision 5

WAS: ECN NOTE: INCORPORATES CHANGES MADE BY ECN–711932 AND ECN–714967 AND ECN–715003.

PUMP ROOM JUMPER SCHEDULE

JUMPER NAME	NOZZLE FROM	NOZZLE TO	SERVICE/PURPOSE	DRAWING NUMBER
15 TO 17	15	17	POWER/SIGNAL	H–2–99021
20 TO (P–B–1) C	20	(P–B–1) C	POWER/SIGNAL	H–2–99022
21 (SPARE)	21	N/A	POWER/SIGNAL	N/A
21 TO 36	36	21	SLURRY	H–2–99043
24 TO 2	24	2	POWER/SIGNAL, PE–CA1–8 PSH–CA1–3, PSH–PB2–1 POSN–ZS–CA1–2–1, 2–2, 2A–2, ZT–CA1–3	H–2–99020
30 TO 6	30	6 & 20	POWER/SIGNAL AT–PB1–2, VE–PB1–1/2/3	H–2–99012
31 TO (P–B–2) F	31	(P–B–2) F	SIGNAL, AT–PB2–1, ST–PB2–1 VE–PB2–1, TE–PB2–1	H–2–99015
32 TO (P–B–2) G	32	(P–B–2) G	WATER, FILTERED RAW TO PUMP SEAL	H–2–99013
33 TO (P–B–2) D	33	(P–B–2) D	POWER TO PUMP 460 VOLT	H–2–99011
37 TO (P–B–2) H	37	(P–B–2) H	GREASE TO MOTOR BEARINGS	H–2–99006
C TO (P–B–2) 13	C	(P–B–2) 13		H–2–99024
C TO 4–40	C	4 & 40		H–2–836148
4 D TO 13A	D	13A	SUPERNATE EVAPORATOR FEED	H–14–107263
E (BLANK)	E	N/A	SLURRY	H–2–32440
G TO B	G	B	SLURRY	H–2–90977
H TO A	H	A	SLURRY	H–2–90978
FROM SAMPLE CABINET	SAMPLE CABINET	J	SUPERNATE	
TO SAMPLE CABINET	K	SAMPLE CABINET	SUPERNATE	
FROM SAMPLE CABINET	SAMPLE CABINET	H	SLURRY	H–2–70087
TO SAMPLE CABINET	G	SAMPLE CABINET	SLURRY	H–2–70087

IS:

PUMP ROOM JUMPER SCHEDULE

JUMPER NAME	NOZZLE FROM	NOZZLE TO	SERVICE/PURPOSE	DRAWING NUMBER
15 TO 17	15	17	POWER/SIGNAL	H–2–99021
20 TO (P–B–1) C	20	(P–B–1) C	POWER/SIGNAL	H–2–99022
21 (SPARE)	21	N/A	POWER/SIGNAL	N/A
21 TO 36	36	21	SLURRY	H–2–99043
24 TO 2	24	2	POWER/SIGNAL, PE–CA1–8 PSH–CA1–3, PSH–PB2–1 POSN–ZS–CA1–2–1, 2–2, 2A–2, ZT–CA1–3	H–2–99020
30 TO 6	30	6 & 20	POWER/SIGNAL AT–PB1–2, VE–PB1–1/2/3	H–2–99012
31 TO (P–B–2) F	31	(P–B–2) F	SIGNAL, AT–PB2–1, ST–PB2–1 VE–PB2–1, TE–PB2–1	H–2–99015
32 TO (P–B–2) G	32	(P–B–2) G	WATER, FILTERED RAW TO PUMP SEAL	H–2–99013
33 TO (P–B–2) D	33	(P–B–2) D	POWER TO PUMP 460 VOLT	H–2–99011
37 TO (P–B–2) H	37	(P–B–2) H	GREASE TO MOTOR BEARINGS	H–2–99006
41 TO 5	41	5	SLURRY TO 241–AW–02A PUMP PIT	H–14–111834
43 TO 13A	43	13A	SUPERNATE FROM TK–241–AW–102–02E	H–14–111835
C TO (P–B–2) 13	C	(P–B–2) 13		H–2–99024
C TO 4–40	C	4 & 40		H–2–836148
4 D TO 13A	D	13A	SUPERNATE EVAPORATOR FEED	H–14–107263
E (BLANK)	E	N/A	SLURRY	H–2–32440
G TO B	G	B	SLURRY	H–2–90977
H TO A	H	A	SLURRY	H–2–90978
FROM SAMPLE CABINET	SAMPLE CABINET	J	SUPERNATE	
TO SAMPLE CABINET	K	SAMPLE CABINET	SUPERNATE	
FROM SAMPLE CABINET	SAMPLE CABINET	H	SLURRY	H–2–70087
TO SAMPLE CABINET	G	SAMPLE CABINET	SLURRY	H–2–70087

ENGINEERING CHANGE NOTICE CONTINUATION SHEET	1a. ECN-715005
	1b. Proj. T1P207

Document/Drawing No. H-2-99009 Sheet 1 Revision 5

WAS: INCORPORATES CHANGES MADE BY ECN-714967, ECN-715003, ECN-715004 AND ECN-715006.

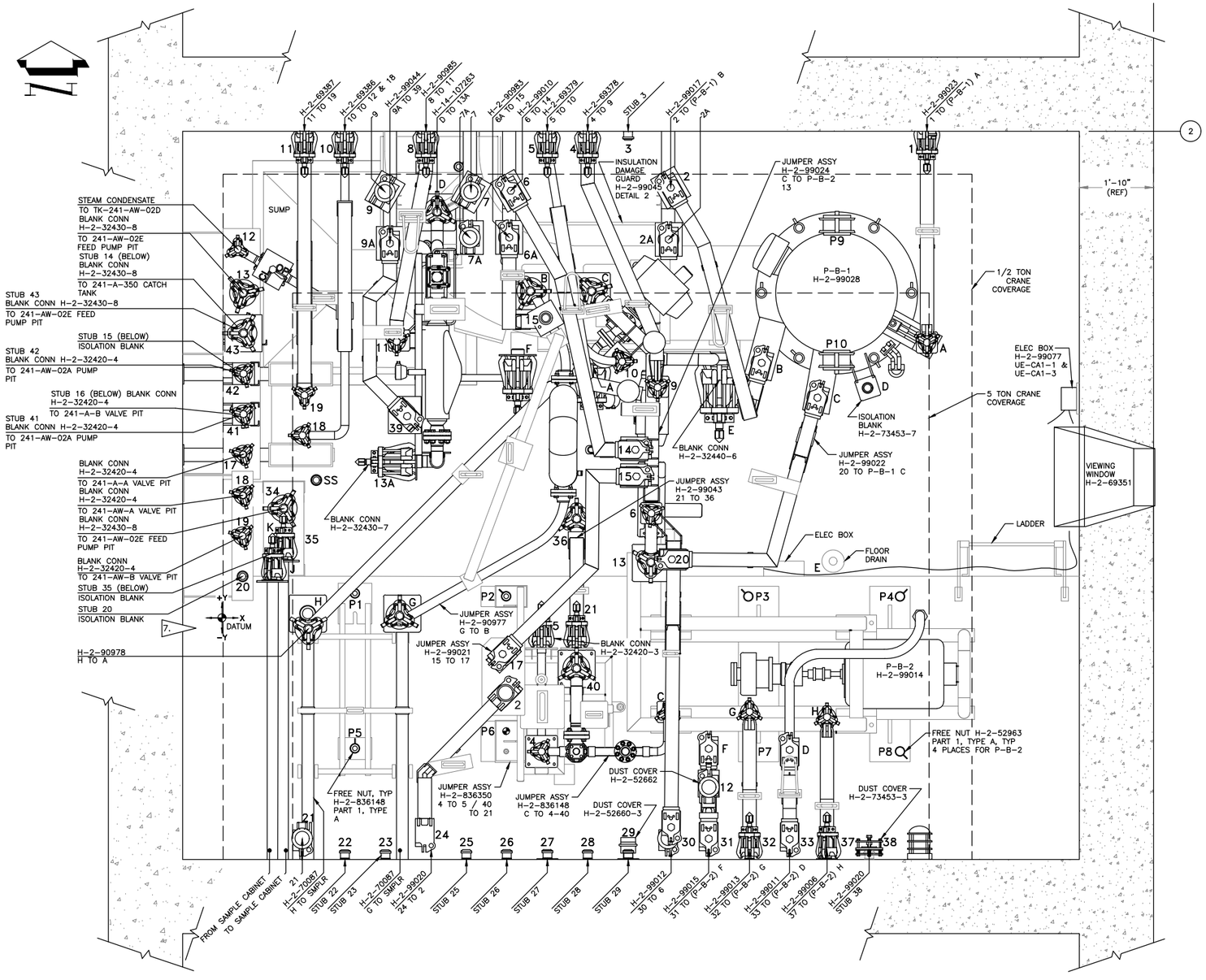

ENGINEERING CHANGE NOTICE CONTINUATION SHEET	1a. ECN-715005 1b. Proj. T1P207

Document/Drawing No. H-2-99009	Sheet 1	Revision 5

IS:

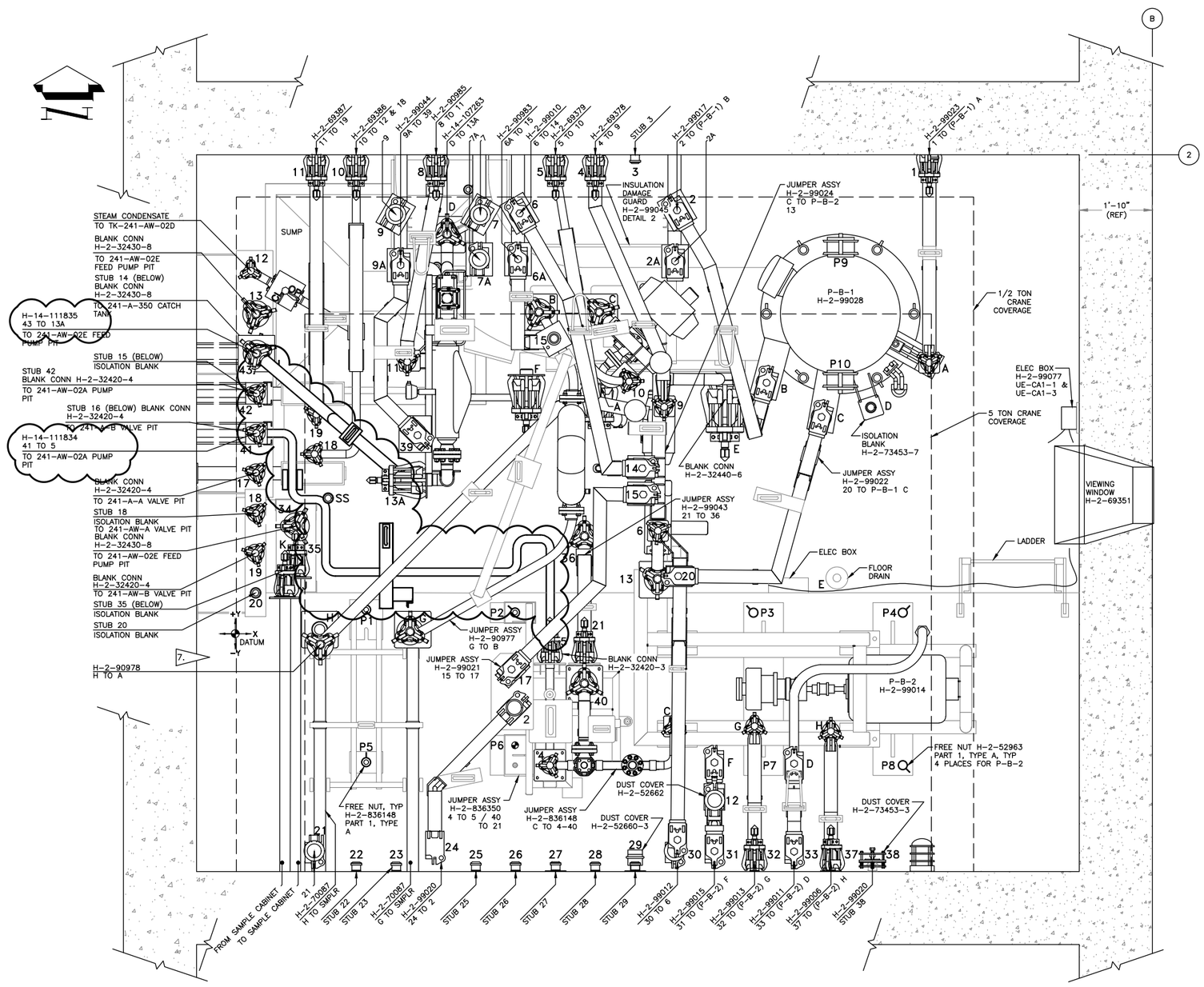

ENGINEERING CHANGE NOTICE CONTINUATION SHEET	1a. ECN–715005
	1b. Proj. T1P207

Document/Drawing No. H–14–107346 Sheet 3 Revision 43

WAS: INCORPORATES CHANGES MADE BY ECN–715003, ECN–715004 AND ECN–715006

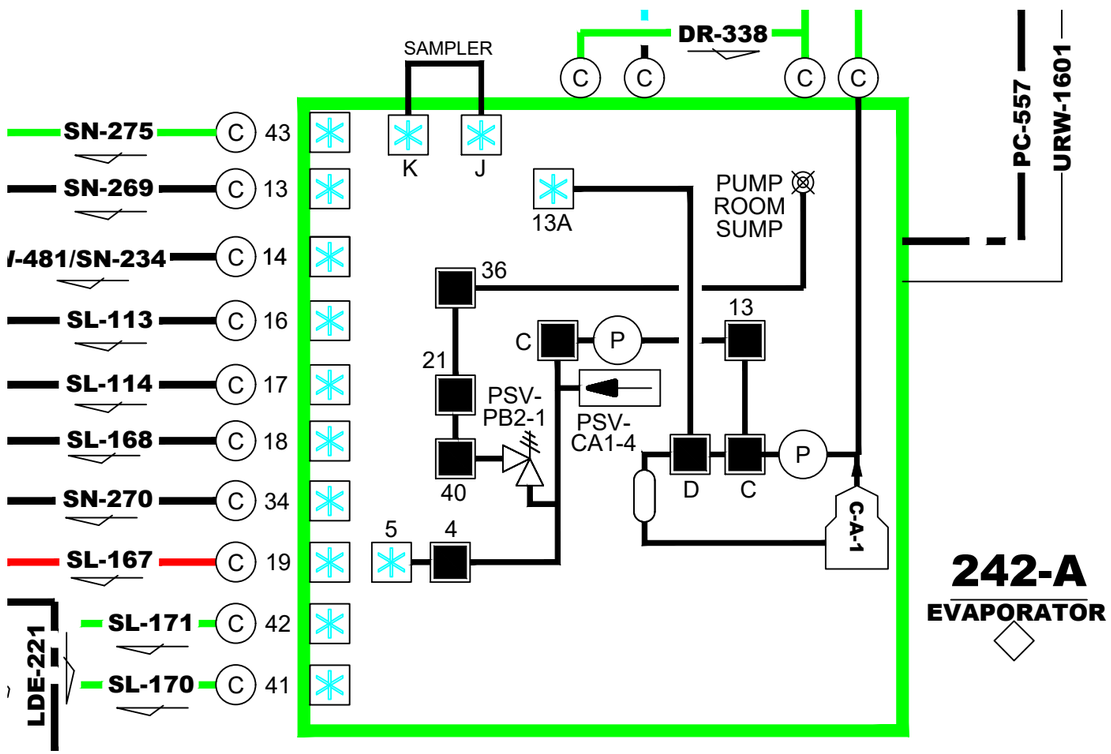

IS:

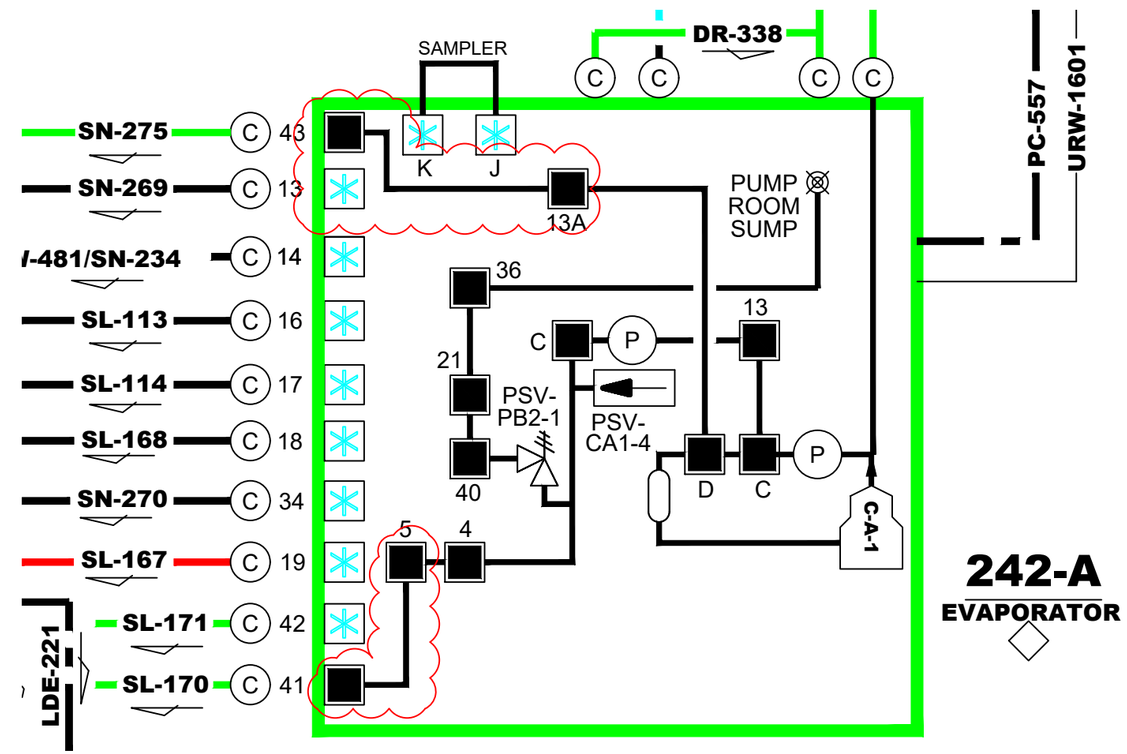

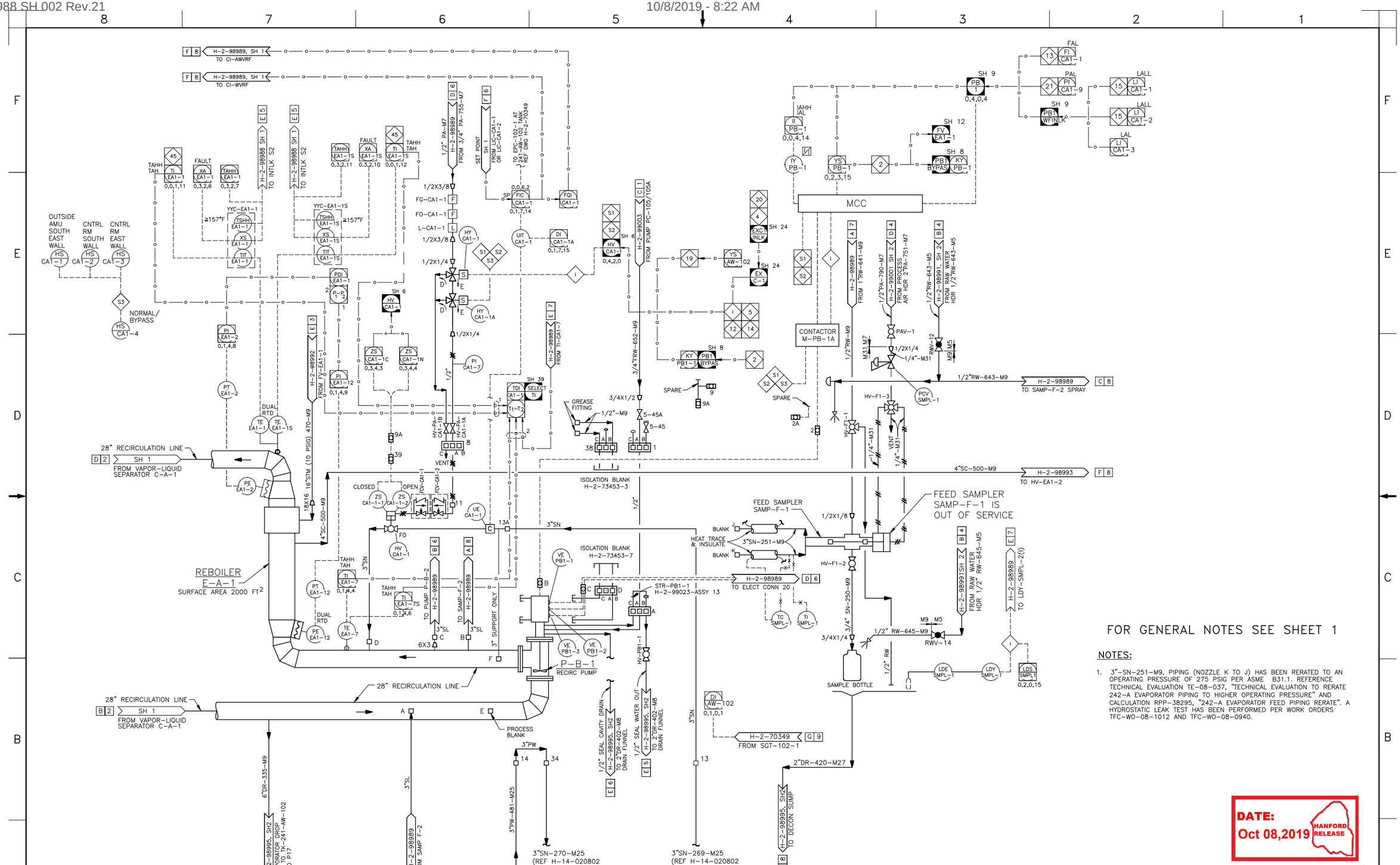

FOR GENERAL NOTES SEE SHEET 1

NOTES:

1. 3"-SN-251-M9, PIPING (NOZZLE K TO J) HAS BEEN RERATED TO AN OPERATING PRESSURE OF 275 PSIG PER ASME B31.1. REFERENCE TECHNICAL EVALUATION TE-08-037, "TECHNICAL EVALUATION TO RERATE 242-A EVAPORATOR PIPING TO HIGHER OPERATING PRESSURE" AND CALCULATION RPP-38295, "242-A EVAPORATOR FEED PIPING RERATE". A HYDROSTATIC LEAK TEST HAS BEEN PERFORMED PER WORK ORDERS TFC-WO-08-1012 AND TFC-WO-08-0940.

DATE: Oct 08,2019 HANFORD RELEASE

DWG NUMBER	TITLE	REF NUMBER	TITLE
DRAWING TRACEABILITY LIST		REFERENCES	
NEXT USED ON SHEET 1			

REV NO	DESCRIPTION
21	INC DCN-715281
REVISIONS	

BLDG NO 242-A

INDEX NO 7001 7002

CAUTION: NOT COMPLETE WITHOUT CURRENT CHANGE DOCUMENTS FROM DATABASE

	NAME	DATE	COMPANY
DRAFTING	M R DILLARD	N/A/2019	BRRPS
DRAFTING CHECKER	J CAMPBELL	N/A/2019	BRRPS
ENG. ENG. REPRESENTATIVE	T M GREEN	N/A/2019	BRRPS

U.S. DEPARTMENT OF ENERGY
Office of River Protection

P&ID
EVAP RECIRC
SYSTEM

SIZE F DRAWING NUMBER H-2-98988 SHEET 2 REV 21

SCALE NONE

15332 DOE_TB_F.DWG (MARCH 2019)

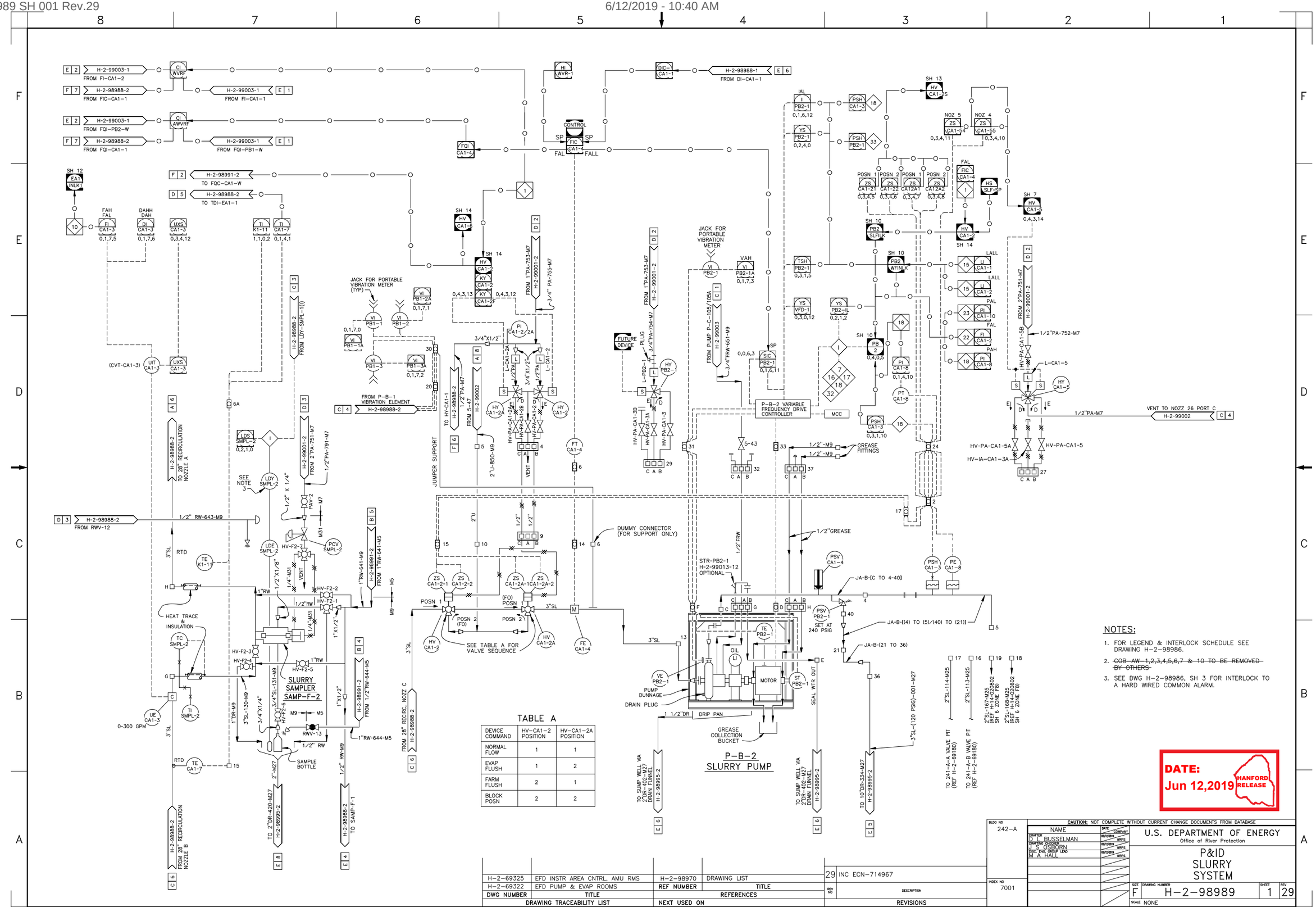

NOTES:

1. FOR LEGEND & INTERLOCK SCHEDULE SEE DRAWING H-2-98986.
2. ~~COB-AW-1,2,3,4,5,6,7 & 10 TO BE REMOVED BY OTHERS~~
3. SEE DWG H-2-98986, SH 3 FOR INTERLOCK TO A HARD WIRED COMMON ALARM.

TABLE A

DEVICE COMMAND	HV-CA1-2 POSITION	HV-CA1-2A POSITION
NORMAL FLOW	1	1
EVAP FLUSH	1	2
FARM FLUSH	2	1
BLOCK POSN	2	2

DATE: Jun 12,2019 HANFORD RELEASE

DWG NUMBER	TITLE	REF NUMBER	TITLE
H-2-69325	EFD INSTR AREA CNTRL, AMU RMS	H-2-98970	DRAWING LIST
H-2-69322	EFD PUMP & EVAP ROOMS		

DRAWING TRACEABILITY LIST — REFERENCES — NEXT USED ON

REV NO	DESCRIPTION
29	INC ECN-714967

REVISIONS

BLDG NO 242-A

INDEX NO 7001

CAUTION: NOT COMPLETE WITHOUT CURRENT CHANGE DOCUMENTS FROM DATABASE

	NAME	DATE	COMPANY
DRAFTER	B. RUSSELMAN	06/12/2019	WRPS
DRAFTING SUPERVISOR	J. S. OSBORN	06/12/2019	WRPS
DISC. ENG. GROUP LEAD	M. A. HALL	06/12/2019	WRPS

U.S. DEPARTMENT OF ENERGY
Office of River Protection

P&ID SLURRY SYSTEM

SIZE F | DRAWING NUMBER H-2-98989 | SHEET 1 | REV 29

SCALE NONE

26971 DOE_TB_F.DWG (MARCH 2019)

GENERAL NOTES: (UNLESS OTHERWISE SPECIFIED)

1. DIMENSIONS ARE IN INCHES.
2. TOLERANCES SHALL BE AS FOLLOWS:
   FRACTIONS = ±1/8
   .X = ±0.1
   .XX = ±0.03
   .XXX = ±0.010
   ANGLES = ±0.5°
3. REMOVE ALL BURRS AND BREAK SHARP EDGES.
4. CERTIFIED MATERIAL TEST REPORT (CMTR) REQUIRED FOR ALL PIPING MATERIALS.
5. PRIMARY PIPE (ITEMS 36, 37, 42, 43, 63 AND 64) ARE SAFETY-SIGNIFICANT.
6. WELD AND INSPECT PIPING IN ACCORDANCE WITH ASME B31.3, 2016 FOR CATEGORY NORMAL FLUID SERVICE. ALL WELDS SHALL BE VT ON FINAL PASS UNLESS OTHERWISE SPECIFIED. USE OF BACKING RINGS IS NOT PERMITTED. ALL PRIMARY PIPE WELDS REQUIRE 100% VOLUMETRIC EXAMINATION (RT OR UT) ENCASEMENT PIPE WELDS REQUIRE 20% MINIMUM VOLUMETRIC EXAMINATION.
7. WELD AND INSPECT STRUCTURAL WELDS IN ACCORDANCE WITH AWS D1.1, 2017 OR AWS D1.6, 2007 STATICALLY LOADED CRITERIA. ALL WELDS SHALL BE VT ON FINAL PASS UNLESS OTHERWISE SPECIFIED. WELD PROCEDURES AND QUALIFICATIONS PER ASME B&PV CODE SECTION IX, 2017 ARE ACCEPTABLE.
8. DESIGN PRESSURE FOR THE PRIMARY PIPING IS 620 PSIG. ALL INTEGRAL ATTACHMENTS TO THE PRIMARY PIPE SHALL BE COMPLETED PRIOR TO PERFORMING HYDROSTATIC TESTING. INSTALL TEMPORARY PIPE END COVERS ON PRIMARY PIPE AND PERFORM A HYDROSTATIC PRESSURE TEST TO 930 PSIG +20/−0 PSIG. MAINTAIN PRESSURE FOR 10 MINUTES AND PERFORM VISUAL INSPECTION OF PIPE ASSEMBLY. VERIFY NO LEAKAGE IS PRESENT. THE TEST PRESSURE HAS BEEN DETERMINED IN ACCORDANCE WITH ASME B31.3-2016, PARAGRAPH 345.4.2(b), AT THE DESIGN TEMPERATURE OF 200°F.
9. DESIGN PRESSURE FOR THE ENCASEMENT PIPING IS 60 PSIG. PERFORM A PNEUMATIC PRESSURE TEST TO 66 PSIG +10/−0 PSIG IN ACCORDANCE WITH ASME B31.3, 2016, PARAGRAPH 345.5. VERIFY NO LEAKAGE IS PRESENT.
10. PREPARE AND COAT ALL EXPOSED EXTERIOR CARBON STEEL SURFACES OF ENCASEMENT PIPING UP TO AND INCLUDING THE BACK FACE OF ITEMS 12 AND 13 AS WELL AS EXTERIOR PLATES (ITEMS 70 AND 71) WITH SCOTCHKOTE 134 FUSION BONDED EPOXY. FOR ITEMS 70 AND 71 LEAVE 3" AROUND ID AS INDICATED UNCOATED TO ALLOW FOR WELDING. COATING AREA SHALL BE PREPARED AND APPLIED PER MANUFACTURER'S SPECIFICATIONS, TO A MINIMUM DRY FILM THICKNESS OF 30 MILS. COATING SHALL BE 100% INSPECTED FOR HOLIDAYS, PINHOLES AND DISCONTINUITIES WITH HOLIDAY DETECTOR IN ACCORDANCE WITH ASTM D5162. THE COATING HOLD BACK FOR ITEMS 1 AND 2 SHALL BE 11 1/2 INCHES. THE HOLD BACK AREA AND BEVEL SHALL BE COATED WITH A WELDABLE PRIMER, SUCH AS 3M PART NUMBER 05917. UTILIZE SCOTHKOTE 323 OR 323+ FOR REPAIRS. REPAIR SPECIFICATIONS TO A MINIMUM DRY FILM THICKNESS OF 30 MILS.
11. PRIMARY PIPING. PIPE CODE (M-9), 620 PSIG DESIGN PRESSURE, 200°F DESIGN TEMPERATURE, 2-INCH AND 3-INCH DIAMETER SCHEDULE 40, SEAMLESS, ASTM A312 GRADE TP 316L PIPE.
12. ENCASEMENT PIPING PIPE CODE (M-26a), 60 PSIG DESIGN PRESSURE, 200°F DESIGN TEMPERATURE, 4-INCH AND 6-INCH DIAMETER SCHEDULE 40, SEAMLESS, ASTM A53 OR ASTM A106 GRADE B.
13. PIPING INTERNALS (PRIMARY PRESSURE BOUNDARY AND ENCASEMENT) WHEN INSTALLED ARE A CLASS I, DIVISION 1, GROUP B HAZARDOUS LOCATION PER HNF-SD-WM-HC-017.
14. PAINT NOZZLE IDENTIFICATION NUMBER IN AREA SHOWN. THE TWO 2" WALL NOZZLES TO BE PAINTED AS "41" AND "42". THE 3" WALL NOZZLE TO BE PAINTED AS "43". BLACK TEXT, YELLOW BACKGROUND, 3" TALL BLOCK NUMERALS WITH 1/2" WIDE BLACK BORDER AROUND EDGE OF NUMBERED AREA.
15. FACE BLOCK (34 AND 35) TO ALIGN WITH DATUMS AFTER FINAL ASSEMBLY. INSTALL BAIL AFTER ACHIEVING ALIGNMENT.
16. GRIND OR MACHINE FULCRUM PLATE TO ACHIEVE SPECIFIED DIMENSION.
17. INSTALL GASKET ITEM 46 OR 47 TO BACK SURFACE OF WALL MOUNT PLATE AFTER HYDROTEST AND PAINTING ARE COMPLETED.
18. LOCATE LIFT BAIL TO CENTER OF GRAVITY FOR WALL NOZZLE ASSEMBLY WITH COUNTERWEIGHT ASSEMBLY ATTACHED. ENSURE COMPLETED ARRANGEMENT HANGS LEVEL WITHIN TWO DEGREES AS SUPPORTED BY LIFT BAIL LOCATION.
19. LOCATE LIFT BAIL TO CENTER OF GRAVITY FOR COUNTERWEIGHT ASSEMBLY (ITEM 1 OR 2). ENSURE COMPLETED COUNTERWEIGHT ASSEMBLY HANGS LEVEL WITHIN TWO DEGREES AS SUPPORTED BY LIFT BAIL LOCATION.
20. INSTALL PIN (ITEM 54) INTO ATTACHEMENT SCREW (ITEM 32) FOLLOWING THE INSTALLATION INTO COUNTERWEIGHT (ITEM 1 OR 2). ENSURE PIN IS CENTERED ON SCREW AND THE PIN DOES NOT INTERFERE WITH RECESSED OPENING IN COUNTERWEIGHT.
21. IN-PROCESS EXAMINATION SHALL BE PERFOMED IN ACCORDANCE WITH ASME B31.3, 2016 SECTION 344.7. LIQUID PENETRANT EXAMINATION SHALL BE PERFORMED ON THE ROOT PASS.
22. QUALITY CONTROL TO VERIFY NO DEBRIS IS PRESENT IN THE ANNULAR SPACE BETWEEN PRIMARY AND ENCASEMENT, EXCEPT FINAL PACKAGING.
23. QUALITY CONTROL TO VERIFY PRIMARY PIPING IS CLEANED AND CLEAR OF OBSTRUCTIONS, EXCEPT FINAL PACKAGING.
24. INSTALL NOZZLE PROTECTION COVERS OVER SEALING SURFACE OF 2" AND 3" PUREX NOZZLES.
25. PROVIDE THREE LIFTING RINGS (ITEM 56) TO SUPPORT FIELD INSTALLATION OF EXTERIOR PLATES (ITEMS 70 AND 71). TORQUE TO 12 FT-LBS AT TIME OF INSTALLATION PER MANUFACTURERS RECOMMENDATION.
26. BLOCK IS TO SUPPORT HYDROTESTING AND INSTALLATION. WELD BETWEEN PIPE (ITEMS 36 AND 37) AND BLOCK (ITEMS 34 AND 35) DOES NOT REQUIRE HYDROTESTING.
27. TORQUE 30-40 FT-LB.

GENERAL NOTES CONTINUED ON SHEET 2.

PARTS LIST/MATERIAL LIST

NOTE FLAG	QTY -090	QTY -080	QTY -070	QTY -060	QTY -050	QTY -040	QTY -030	QTY -020	QTY -010	PARTS / DASH NUMBER	NOMENCLATURE/DESCRIPTION	MATERIAL/REFERENCE	SHEET	ITEM NO
			4	4						−027	ALIGNMENT LUG, ø1"	ASTM A36	7,8	40
														41
5.				1							ELBOW, 90°, ø2", LR, SCH 40, SMLS	ASTM A403, GR WP316L, CLASS S	3	42
5.			1								ELBOW, 90°, ø3", LR, SCH 40, SMLS	ASTM A403, GR WP316L, CLASS S	5	43
														44
			2	2							ANGLE, 1 1/2" X 2 1/2" X 1/4" THK, 6" LONG	ASTM A36	3,5	45
							1			−028	GASKET 1, 1/2" THK, NEOPRENE FOAM SHEET, CLOSED CELL, −30° TO 200°F, ADHESIVE BACK, 30 DUROMETER (MCMASTER 8583K68)	ASTM D2000 BC	2,8	46
						1				−029	GASKET 2, 1/2" THK, NEOPRENE FOAM SHEET, CLOSED CELL, −30° TO 200°F, ADHESIVE BACK, 30 DUROMETER (MCMASTER 8583K68)	ASTM D2000 BC	4,8	47
	1									−031	GUIDE PLATE, 3/8" THK	ASTM A240, TYPE 304/304L	9,10	48
	2									−032	GUSSET, 1/4" THK	ASTM A240, TYPE 304/304L	9,10	49
						2	2				THREADED ROD, 1/2-13UNC-2A, 25" LONG	ASTM A193, GRADE B7	4,7	50
						2	2				THREADED ROD, 1/2-13UNC-2A, 25 1/4" LONG	ASTM A193, GRADE B7	4,7	51
								2		−033	COUNTERWEIGHT 5, 2" THK	ASTM A36 OR A108	6,14	52
								1	1	−034	COUNTERWEIGHT 6, 2" THK	ASTM A36 OR A108	6,14	53
								1	1	(98296A916)	SLOTTED SPRING PIN, ø3/16" DIA, 1 3/4" L, 1050-1095 SPRING STEEL, ASME B18.8.2	(MCMASTER)	6	54
						1	1			(33045T75)	EYEBOLT, 3/4-10UNC-2A, 2" THREAD LENGTH, 304 STAINLESS	(MCMASTER)	2,4	55
29. 25.										43705	SIDE LIFTING RING, 3/8-16, 800 LB	ACTEK		56
														57
								2	2		HEX BOLT, 1/2-13UNC-2A, 3" L	ANY GRADE SST	6	58
								4			SOCKET HEAD CAP SCREW, 1/2-13UNC-2A, 6 1/2"L	ASTM F835	6	59
								4	4		SOCKET HEAD COUNTERSUNK BOLT, 1/4-20UNC-2A, 1/2"L	ANY GRADE SST	6	60
									4		SOCKET HEAD CAP SCREW, 1/2-13UNC-2A, 2 1/2"L	ASTM F835	6	61
								1	2	H-2-90161-070	ASSEMBLY, 10" CS		6	62
5.				1						H-2-90185-020	2" NOZZLE, SCH 40		3	63
5.			1							H-2-90186-020	3" NOZZLE, SCH 40		5	64
				1						H-2-30600-003	SQUARE KICK-OFF PLATE, 2"		3	65
			1							H-2-30600-005	SQUARE KICK-OFF PLATE, 3"		5	66
								1		H-2-90161-080	ASSEMBLY, 14" CS		6	67
														68
														69
29.										−035	2" EXTERIOR PLATE, 1" THK	ASTM A36	12	70
29.										−036	3" EXTERIOR PLATE, 1" THK	ASTM A36	12	71
														72
														73
														74
29.						4	4			(12022)	PLATE WASHER, 2 3/4"SQ X 5/16" THK, 13/16"ID, ASTM A36, GALVANIZED	(PORTLAND BOLT)		75
29.						4	4				KB-TZ GALVANIZED EXPANSION ANCHOR BOLT, 3/4" DIA X MIN 5 1/2" EFFECTIVE EMBED. TOTAL BOLT LENGTH 10"	HILTI		76
														77
		1			1					−037	FULCRUM, PLATE, 1/4" THK	ASTM A36 OR A108	2,4,8	78
			2							−038	WING 4, 1/4" THK	ASTM A240, TYPE 304/304L	7,10	79

PARTS LIST/MATERIAL LIST

NOTE FLAG	QTY -090	QTY -080	QTY -070	QTY -060	QTY -050	QTY -040	QTY -030	QTY -020	QTY -010	PARTS / DASH NUMBER	NOMENCLATURE/DESCRIPTION	MATERIAL/REFERENCE	SHEET	ITEM NO
									X	−010	2" COUNTERWEIGHT ASSEMBLY		6	1
								X		−020	3" COUNTERWEIGHT ASSEMBLY		6	2
							X			−030	2" WALL NOZZLE WELDMENT		2	3
						X				−040	3" WALL NOZZLE WELDMENT		4	4
					X		1			−050	2" OUTER PIPE WELDMENT		2	5
				X			1			−060	2" INNER PIPE WELDMENT		2,3	6
			X			1				−070	3" INNER PIPE WELDMENT		4,5	7
		X				1				−080	3" OUTER PIPE WELDMENT		4	8
	X							1	1	−090	GUIDE WELDMENT		6,9	9
														10
			2	2							ANGLE, 1 1/2" X 1 1/2", 1/4" THK, 4" LONG	ASTM A240, TYPE 304/304L	3,5	11
				1						−001	PLATE 1, 1/2" THK	ASTM A36	7,9	12
			1							−002	PLATE 2, 1/2" THK	ASTM A36	7,9	13
				1						−003	PLATE 3, 1/8" THK	ASTM A36	7,10	14
			1							−004	PLATE 4, 1/8" THK	ASTM A36	7,10	15
				2						−005	PLATE 5, 1/2" THK	ASTM A36	7,10	16
					3					−006	PLATE 6, 1/4" THK	ASTM A36	2,10	17
			1	1							RECT. BAR, 1/2" X 1/8" THK	ASTM A36	7	18
			1	1						−008	PLATE 8, 1" THK	ASTM A36	3,5,10	19
		3									PLATE 7, 1/4" THK	ASTM A36	4,10	20
		4								−011	GUIDE BLOCK 1, 1" THK	ASTM A36	4,10	21
					4					−012	GUIDE BLOCK 2, 1" THK	ASTM A36	2,10	22
			2								PLATE 9, 1/2" THK	ASTM A36	7,10	23
														24
								1	1	−015	UHMWPE SHEET, 1/4" THK	ASTM D4020	6,12	25
								1	1	−016	COUNTERWEIGHT 1, 2" THK	ASTM A36 OR A108	6,11	26
	1									−017	COUNTERWEIGHT 2, 1" THK	ASTM A36 OR A108	6,11	27
								1	1	−018	COUNTERWEIGHT 3, 3/8" THK	ASTM A36 OR A108	6,11	28
								1	1	−019	COUNTERWEIGHT 4, 2" THK	ASTM A36 OR A108	6,13	29
			1							−021	WING 1, 1/4" THK	ASTM A240, TYPE 304/304L	7,10	30
				1						−022	WING 2, 1/4" THK	ASTM A240, TYPE 304/304L	7,10	31
								1	1	−023	ATTACHMENT SCREW, ROUND BAR, ø2 1/2	ASTM A572	6,8	32
				2						−024	WING 3, 1/4" THK	ASTM A240, TYPE 304/304L	7,10	33
				1						−025	BLOCK − 1, 2" THK	ASTM A240, TYPE 304/304L	3,8	34
			1							−026	BLOCK − 2, 2" THK	ASTM A240, TYPE 304/304L	5,8	35
5.				AR							PIPE, ø2", SCH 40, SMLS	ASTM A312, TP 316L	3	36
5.			AR								PIPE, ø3", SCH 40, SMLS	ASTM A312, TP 316L	5	37
					AR						PIPE, ø4", SCH 40, SMLS	ASTM A53 OR A106, GRADE B, TYPE S	2	38
		AR									PIPE, ø6", SCH 40, SMLS	ASTM A53 OR A106, GRADE B, TYPE S	4	39

JOHN COLIN HENDERSON — STATE OF WASHINGTON — 31912 — REGISTERED PROFESSIONAL ENGINEER
4/29/20

REF NUMBER	TITLE
RPP-CALC-63211	ASME B31.3 ANALYSES OF THE NEW SL-170, SL-171, SL-172 AND SN-275 WASTE TRANSFER LINES IN 241-AW TANK FARM
RPP-CALC-63208	STRUCTURAL ANALYSIS FOR THE 242-A PUMP ROOM WALL NOZZLE ASSEMBLIES PLUS COUNTERWEIGHT LIFTING DEVICES

REFERENCES

DWG NUMBER	TITLE

REV NO	DESCRIPTION
1	RELEASED PER EDT-882646

REVISIONS

CAUTION: NOT COMPLETE WITHOUT CURRENT CHANGE DOCUMENTS FROM DATABASE

BLDG NO 242A
INDEX NO 9901

	NAME
DRAFTER	J T FOSS
DRAFTING CHECKER	P M MCELROY
DESIGN ENGINEER	G J BOGEN

U.S. DEPARTMENT OF ENERGY
Office of River Protection

WALL NOZZLE ASSEMBLIES
242-A PUMP ROOM

SIZE F | DRAWING NUMBER H-14-111832 | SHEET 1 | REV 1
SCALE SHOWN

GENERAL NOTES: CONTINUED

28. PREPARE AND PAINT ALL EXPOSED CARBON CARBON STEEL SURFACES OF THE COUNTERWEIGHT ASSEMBLIES (ITEMS 1 AND 2) AND WALL NOZZLES (ITEMS 3 AND 4) ON THE INTERIOR SIDE OF THE PIT (STARTING FORM THE SIDE FACES OF ITEMS 12 AND 13). SURFACE PREPARATION SHALL BE PERFORMED IN ACCORDANCE WITH THE MANUFACTURER'S SPECIFICATIONS. CARBON STEEL SURFACES SHALL BE BLAST CLEANED TO SSPC SP-10 PRIOR TO APPLICATION OF PRIMER/BASE COAT. PRIME SURFACES WITH PPG AMERLOCK 400 SERIES PRIMER PER THE MANUFACTURER'S SPECIFICATIONS, TO OBTAIN A MINIMUM DRY FILM THICKNESS OF 7 MILS. APPLY FINAL TOP COAT(S) USING PPG PSX 700 PER THE MANUFACTURER'S SPECIFICATIONS, TO A MINIMUM DRY FILM THICKNESS OF 7 MILS. LIFT BAILS AND FRONT AND SIDE FACES OF KICK PLATES AND NOZZLE IDENTIFICATION LOCATIONS SHALL BE YELLOW. TOP OF LIFT BAILS AND TIP OF ACORN NUT SHALL BE PAINTED YELLOW ON COUNTERWEIGHT. ALL REMAINING SURFACES SHALL BE WHITE.

29. ITEMS REQUIRED FOR FIELD INSTALLATION. NOT SHOWN ON ASSEMBLIES.

30. GRIND BACK SIDE OF NOZZLE (ITEM 34) AS NECESSARY TO ACHIEVE DESIRED DIMENSION.

31. WELD AND INSPECT WELDS ON COUNTERWEIGHT ASSEMBLIES (ITEM 1 AND 2) PER AWS D14.1, 2005. WELD PROCEDURES AND QUALIFICATIONS PER ASME B&PV CODE SECTION IX, 2017 ARE ACCEPTABLE.

32. LOAD TEST TO 125% (+0%, -5%) OF RATED LOAD WITH QUALITY CONTROL (QC) WITNESS AND TRACEABLE LOAD; ATTACH LOAD TEST TAG PER DOE/RL-92-36. SUBMIT ALL TEST REPORTS AND RECORDS.

33. THE FOLLOWING SHALL BE LABELED ON THE LIFT DEVICE.
    a. THIS LIFTER SHALL BE USED FOR LIFTING THE 2" WALL NOZZLE WELDMENT.
    b. AFFIX AN ANSI Z535.4 COMPLIANT WARNING LABEL TO THE LIFTER.
    c. RATED LOAD CAPACITY OF 795 POUNDS (CAPACITY OF THE LIFTING BAIL).
    d. THIS LIFTER HAS A WEIGHT OF APPROXIMATELY 340 POUNDS WITHOUT LOAD.
    e. DESIGN CATEGORY A, SERVICE CLASS 0.
    f. MANUFACTURER'S NAME
       MANUFACTURER'S ADDRESS
       H-14-111832-010
    g. DO NOT OPERATE WITHOUT READING SAFETY INFORMATION ON DRAWING H-14-111832. FAILURE TO COMPLY WITH THE SAFETY INFORMATION AND PRECAUTIONS ON THE DRAWING COULD RESULT IN SERIOUS INJURY OR EVEN DEATH.

34. THE FOLLOWING SHALL BE LABELED ON THE LIFT DEVICE.
    a. THIS LIFTER SHALL BE USED FOR LIFTING THE 3" WALL NOZZLE WELDMENT.
    b. AFFIX AN ANSI Z535.4 COMPLIANT WARNING LABEL TO THE LIFTER.
    c. RATED LOAD CAPACITY OF 1,490 POUNDS (CAPACITY OF THE LIFTING BAIL).
    d. THIS LIFTER HAS A WEIGHT OF APPROXIMATELY 600 POUNDS WITHOUT LOAD.
    e. DESIGN CATEGORY A, SERVICE CLASS 0.
    f. MANUFACTURER'S NAME
       MANUFACTURER'S ADDRESS
       H-14-111832-020
    g. DO NOT OPERATE WITHOUT READING SAFETY INFORMATION ON DRAWING H-14-111832. FAILURE TO COMPLY WITH THE SAFETY INFORMATION AND PRECAUTIONS ON THE DRAWING COULD RESULT IN SERIOUS INJURY OR EVEN DEATH.

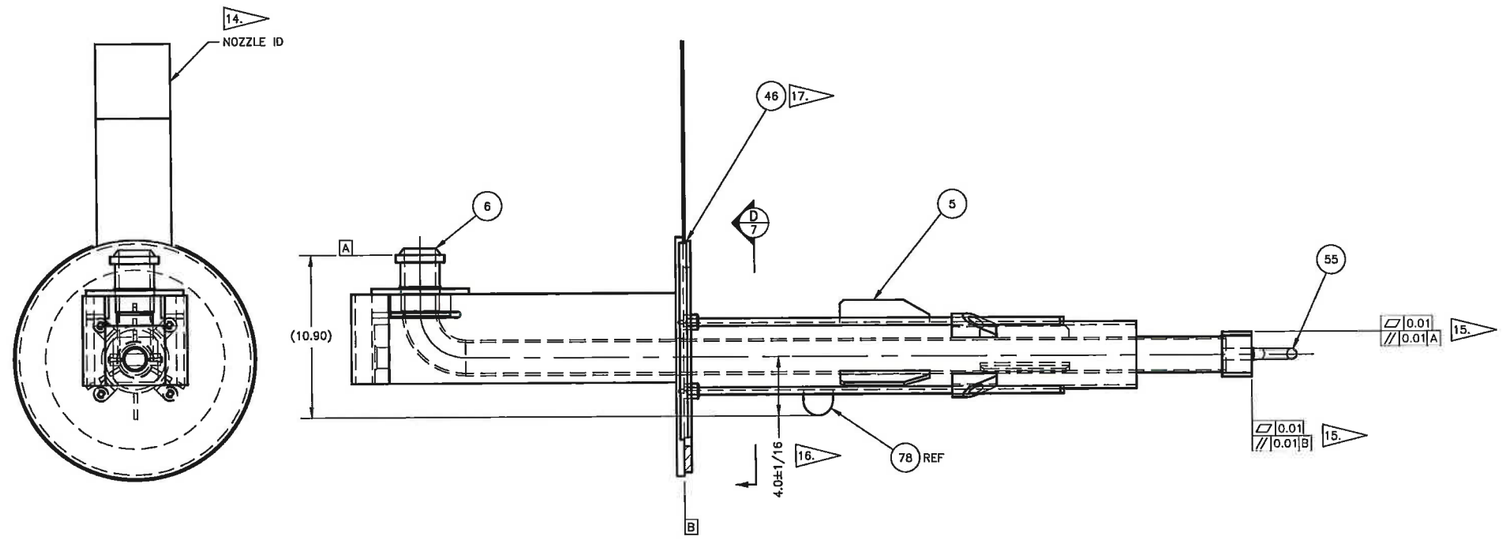

3 2" WALL NOZZLE WELDMENT
SCALE: 1/4

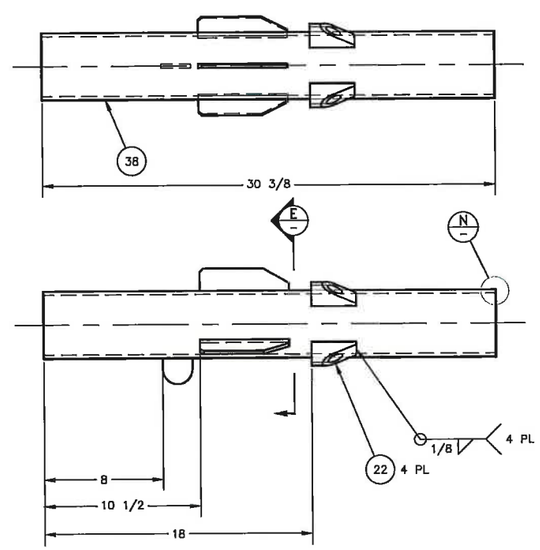

5 2" OUTER PIPE WELDMENT
SCALE: 1/4

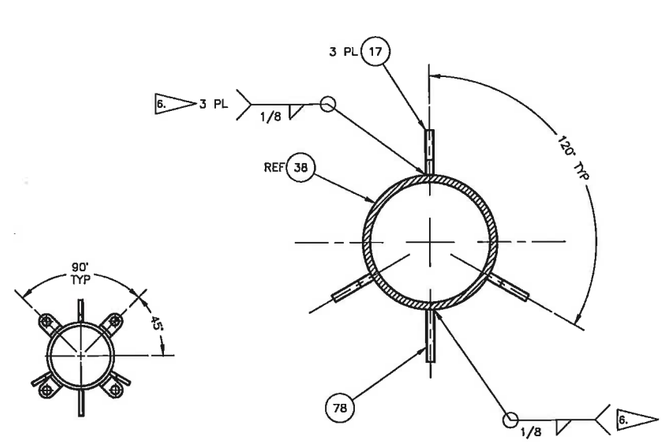

E SECTION
SCALE: 1/2

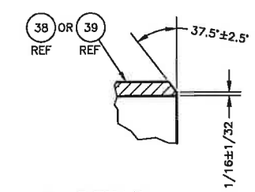

N DETAIL
2,4
SCALE: 1/1
NOTE: PREP FOR FIELD WELD.

4/29/20

DWG NUMBER	TITLE	REF NUMBER	TITLE
		REFERENCES	

REV NO	DESCRIPTION
1	RELEASED PER EDT-882646
	REVISIONS

BLDG NO 242A
INDEX NO 9901

CAUTION: NOT COMPLETE WITHOUT CURRENT CHANGE DOCUMENTS FROM DATABASE

	NAME	DATE	COMPANY
DRAWN	FOSS		CH2M
ENGINEER	P M MCELROY		CH2M
DESIGN ENGINEER	G V BOGEN		CH2M

U.S. DEPARTMENT OF ENERGY
Office of River Protection

WALL NOZZLE ASSEMLIES
242-A PUMP ROOM

SIZE F | DRAWING NUMBER H-14-111832 | SHEET 2 | REV 1

SCALE SHOWN

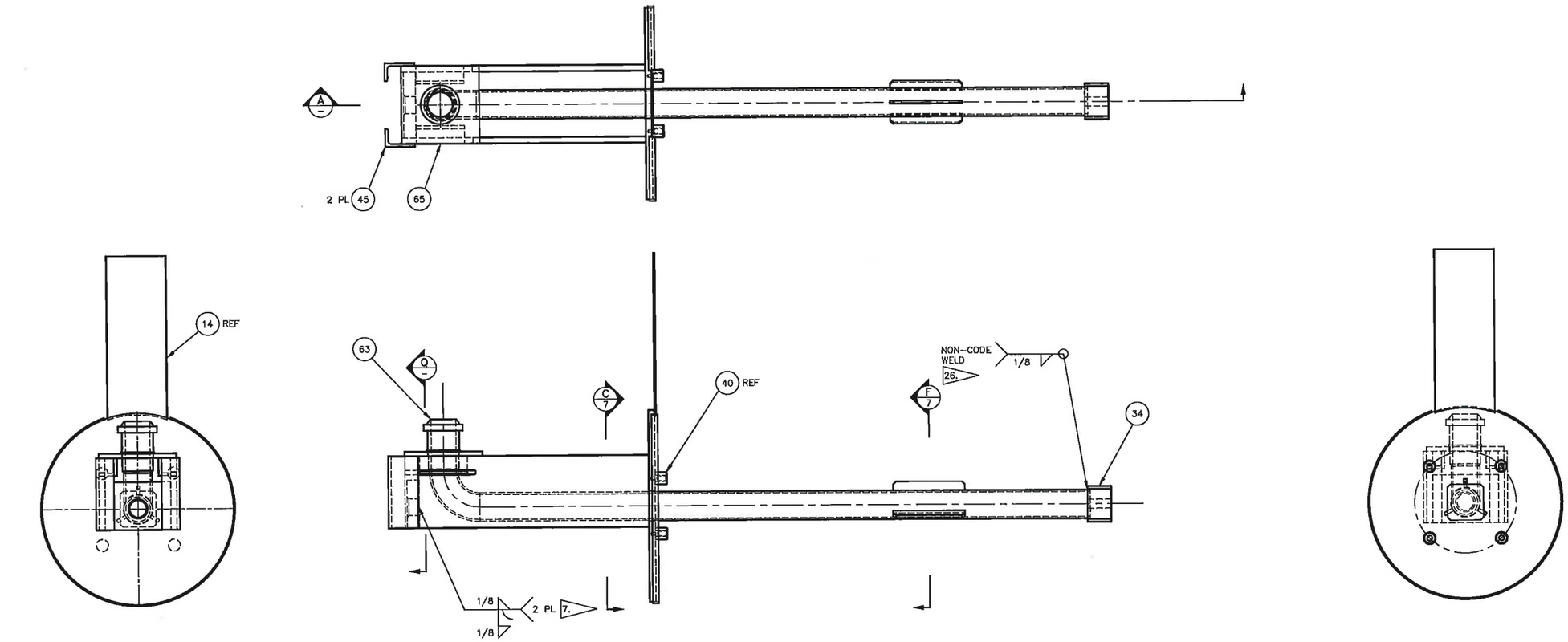

6 2" INNER PIPE WELDMENT
SCALE: 1/4

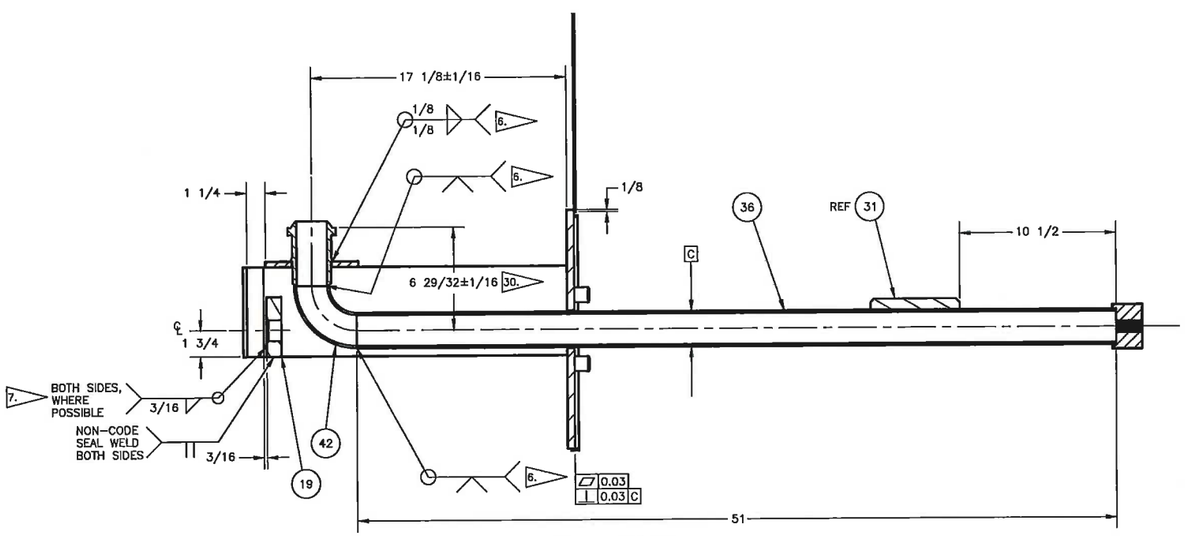

A SECTION
SCALE: 1/4

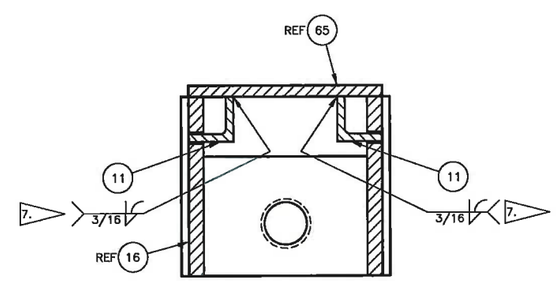

Q DETAIL
SCALE: 1/2
ITEMS 63 AND 42 REMOVED FROM SECTION

4/29/20

DWG NUMBER	TITLE

REF NUMBER	TITLE

REFERENCES

REV NO	DESCRIPTION
1	RELEASED PER EDT-882646

REVISIONS

BLDG NO 242A

INDEX NO 9901

CAUTION: NOT COMPLETE WITHOUT CURRENT CHANGE DOCUMENTS FROM DATABASE

	NAME	DATE	COMPANY
DRAFTER	J F FOSS		CH2M
DRAFTING DESIGN	P M MCELROY		CH2M
DESIGN ENGINEER	G J BOGEN		CH2M

U.S. DEPARTMENT OF ENERGY
Office of River Protection

WALL NOZZLE ASSEMBLIES
242-A PUMP ROOM

SIZE	DRAWING NUMBER	SHEET	REV
F	H-14-111832	3	1

SCALE SHOWN

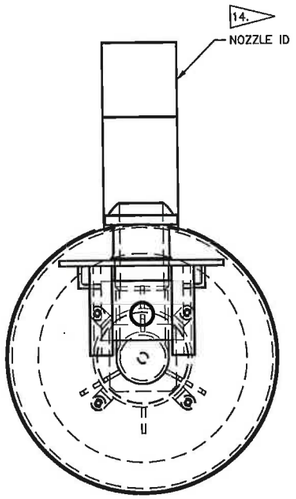

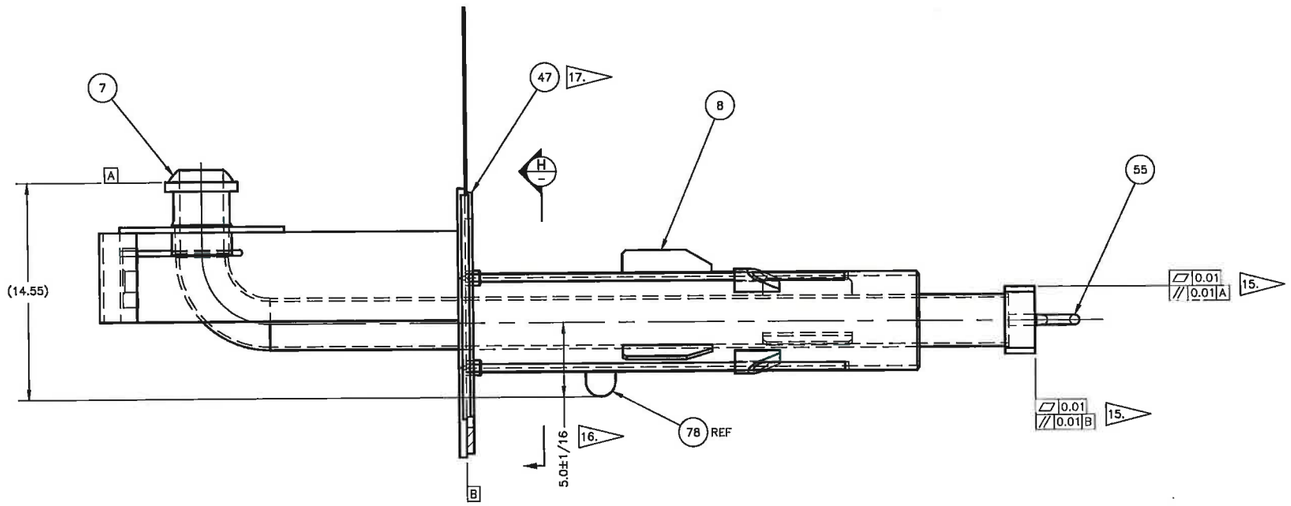

4 3" WALL NOZZLE WELDMENT
SCALE: 1/4

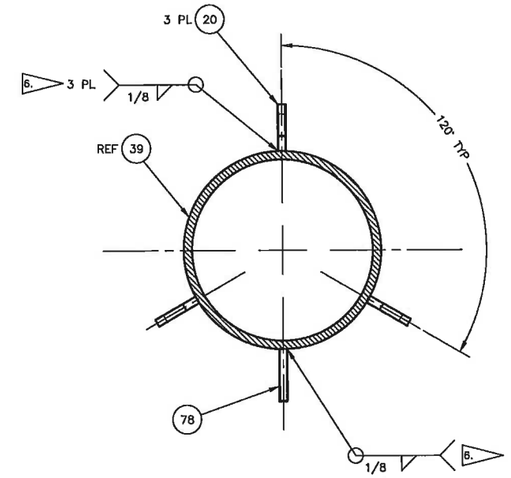

J SECTION
SCALE: 1/2

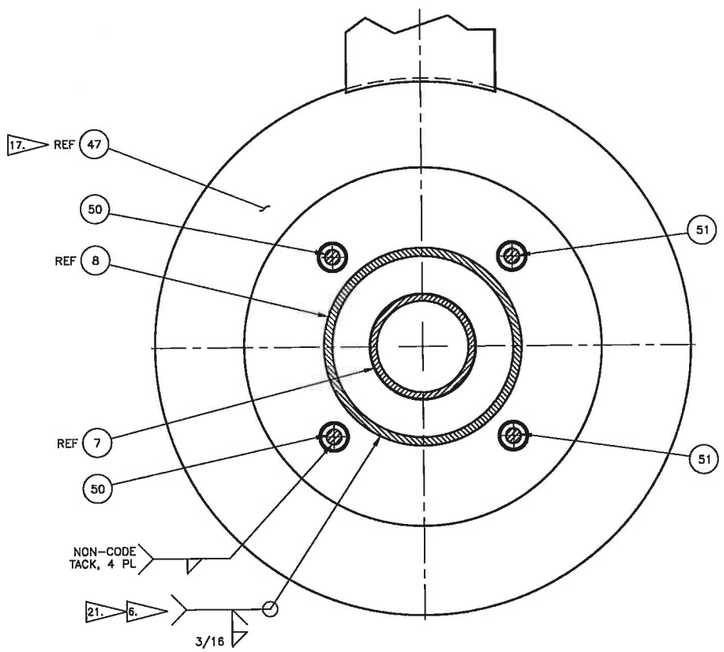

H SECTION
SCALE: 1/2

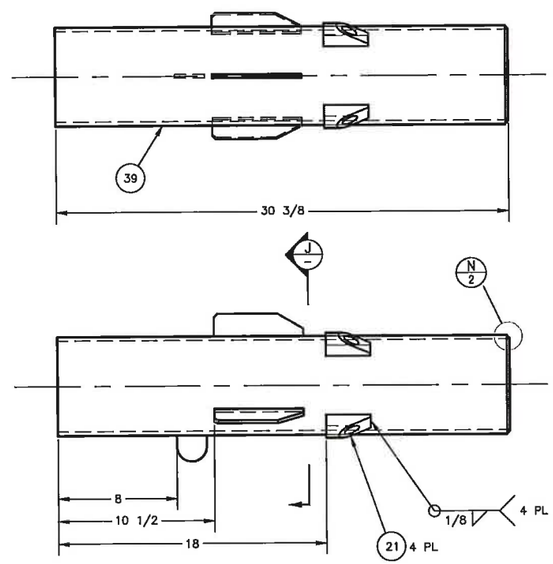

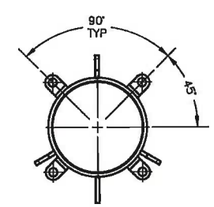

8 3" OUTER PIPE WELDMENT
SCALE: 1/4

DWG NUMBER	TITLE	REF NUMBER	TITLE
		REFERENCES	

REV NO	DESCRIPTION
1	RELEASED PER EDT-882646
	REVISIONS

BLDG NO 242A

INDEX NO 9901

CAUTION: NOT COMPLETE WITHOUT CURRENT CHANGE DOCUMENTS FROM DATABASE

	NAME	DATE	COMPANY
DRAWER	T FOSS		
CHECKER	P M MCELROY		
DESIGN ENGINEER	G J BOGEN		

U.S. DEPARTMENT OF ENERGY
Office of River Protection

WALL NOZZLE ASSEMBLIES
242-A PUMP RPPM

SIZE	DRAWING NUMBER	SHEET	REV
F	H-14-111832	4	1

SCALE SHOWN

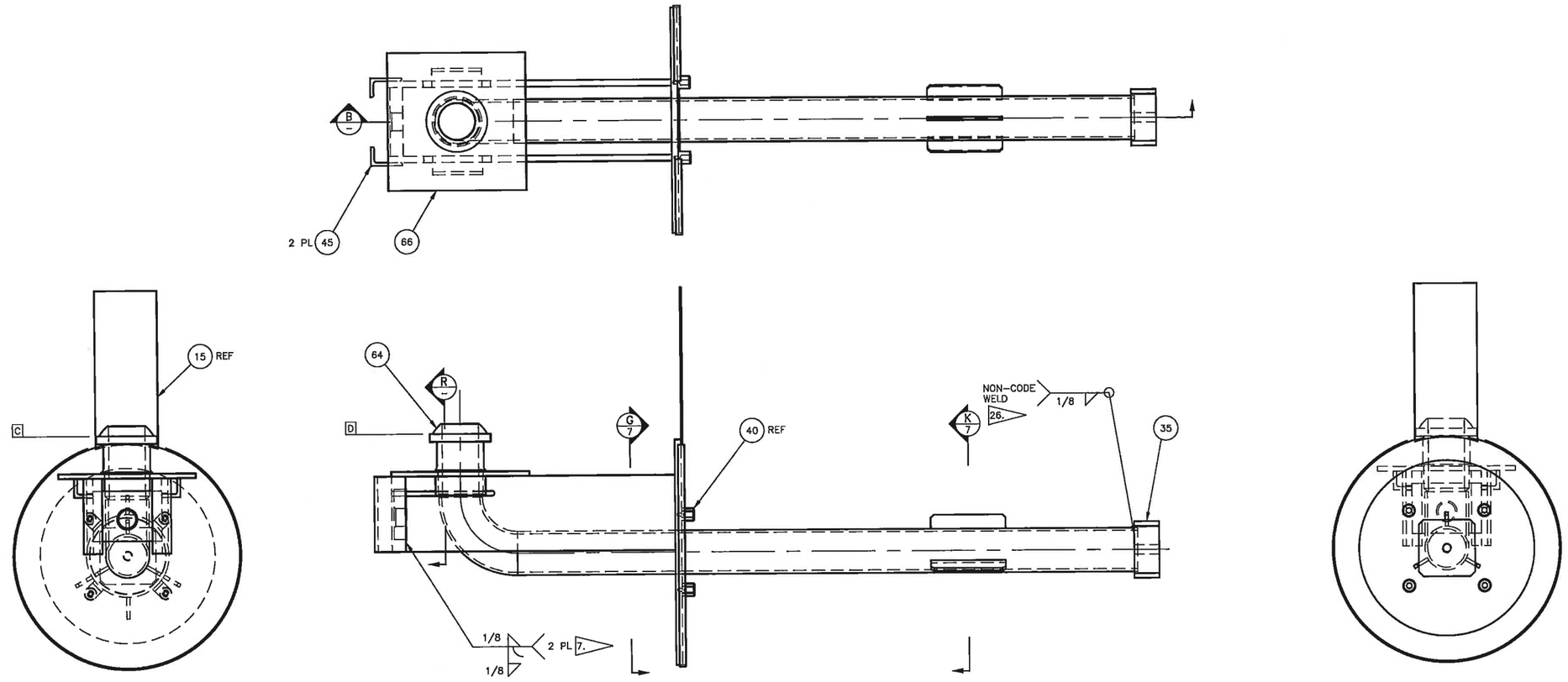

7 3" INNER PIPE WELDMENT
SCALE: 1/4

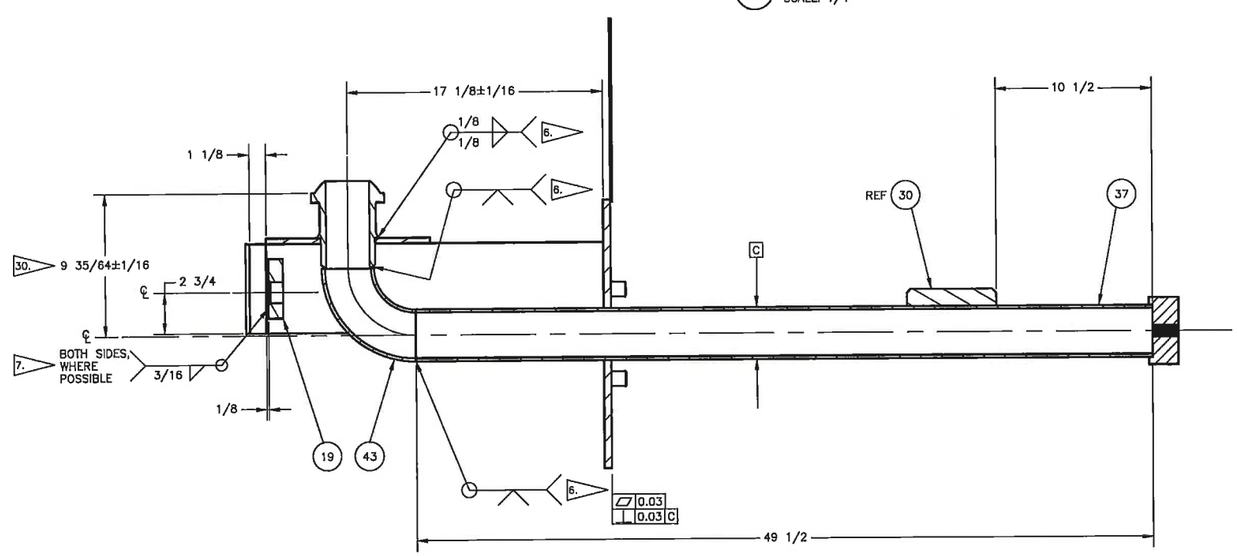

B SECTION
SCALE: 1/4

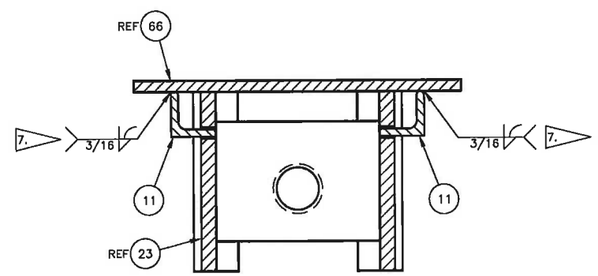

R DETAIL
SCALE: 1/2
ITEMS 64 AND 43 REMOVED FROM SECTION

4/29/20

DWG NUMBER	TITLE	REF NUMBER	TITLE

REFERENCES

REV NO	DESCRIPTION
1	RELEASED PER EDT-882646

REVISIONS

BLDG NO 242A

BLDG NO 9901

CAUTION: NOT COMPLETE WITHOUT CURRENT CHANGE DOCUMENTS FROM DATABASE

	NAME	DATE	COMPANY
DRAWN	J T FOSS		CEARCH
CHECKED / ENGINEER	P M MCELROY		CEARCH
DESIGN ENGINEER	G J BOGEN		CEARCH

U.S. DEPARTMENT OF ENERGY
Office of River Protection

WALL NOZZLE ASSEMBLIES
242-A PUMP ROOM

SIZE F | DRAWING NUMBER H-14-111832 | SHEET 5 | REV 1

SCALE SHOWN

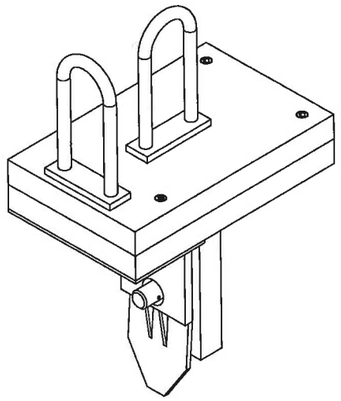

ISO VIEW
SCALE: NTS

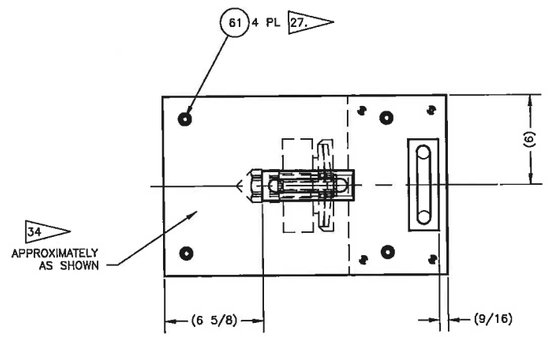

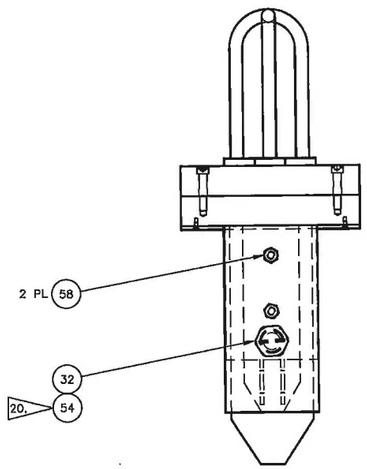

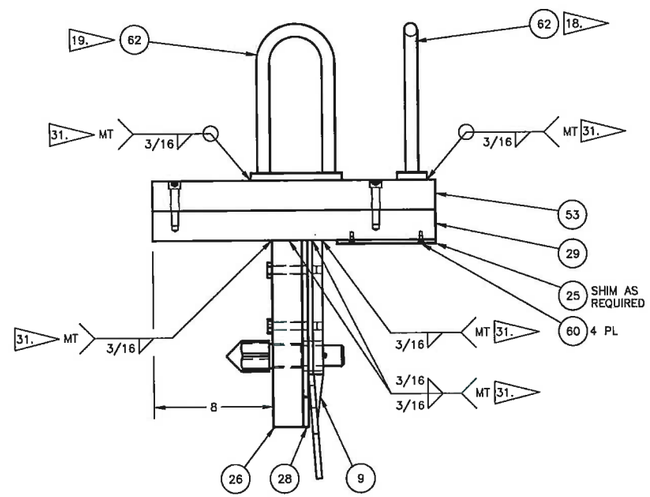

1 2" COUNTERWEIGHT ASSEMBLY
SCALE: 1/4
32.

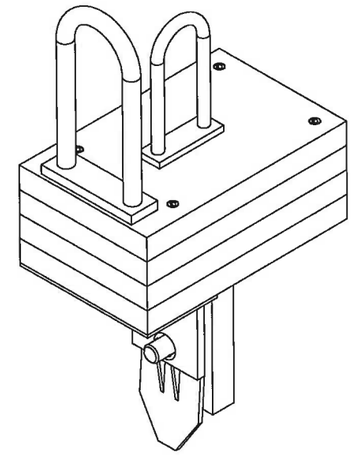

ISO VIEW
SCALE: NTS

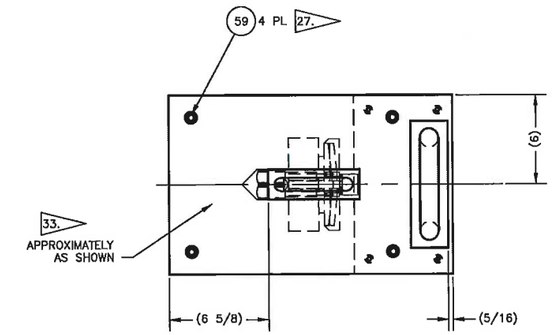

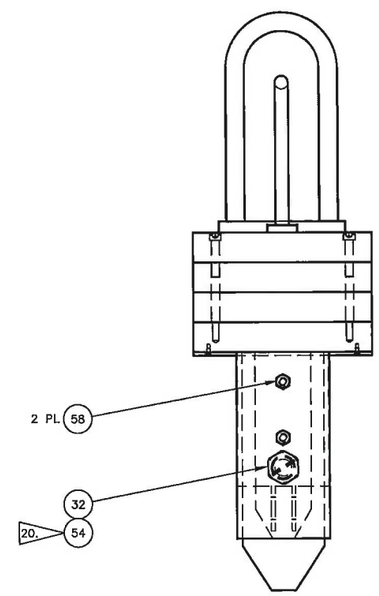

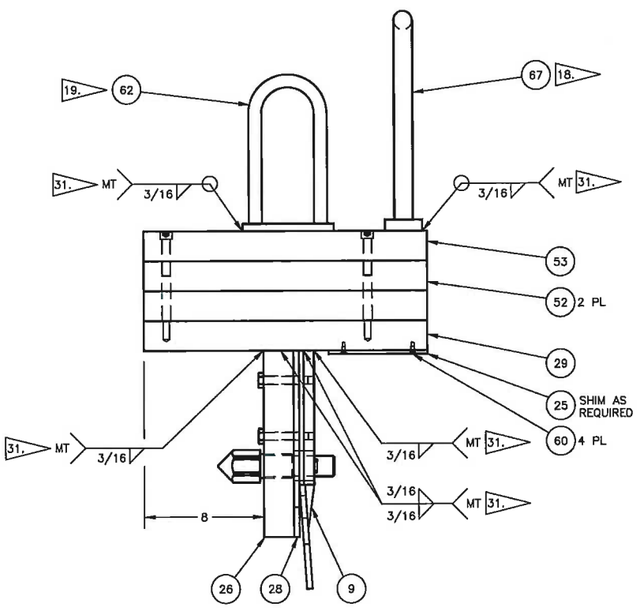

2 3" COUNTERWEIGHT ASSEMBLY
SCALE: 1/4
32.

REV NO	DESCRIPTION
1	RELEASED PER EDT-882646

DWG NUMBER	TITLE	REF NUMBER	TITLE
		REFERENCES	

BLDG NO 242A

INDEX NO 9901

CAUTION: NOT COMPLETE WITHOUT CURRENT CHANGE DOCUMENTS FROM DATABASE

	NAME	DATE	COMPANY
DRAWN BY	N L FOSS		CEMCI
TRACED BY / DESIGN	P M MCELROY		CEMCI
DESIGN ENGINEER	G J BOGEN		CEMCI

U.S. DEPARTMENT OF ENERGY
Office of River Protection

WALL NOZZLE ASSEMBLIES
242-A PUMP ROOM

SIZE	DRAWING NUMBER	SHEET	REV
F	H-14-111832	6	1

SCALE SHOWN

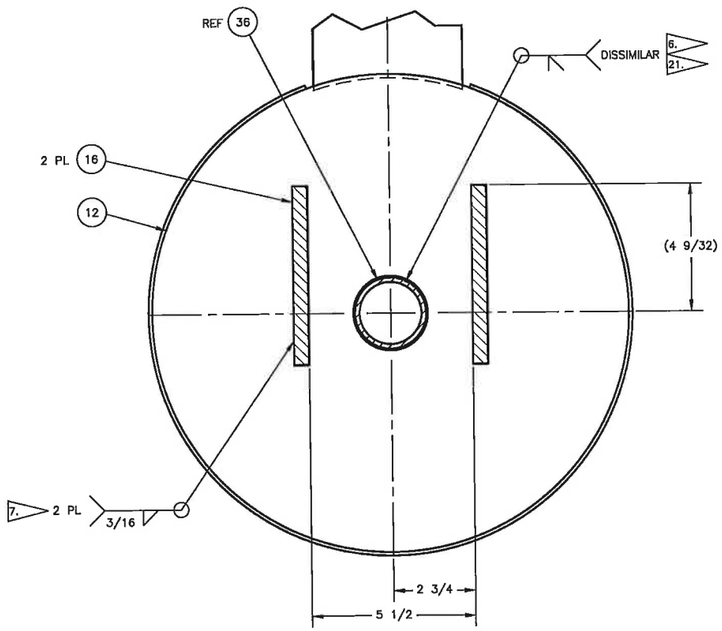

C/3 SECTION
SCALE: 1/2

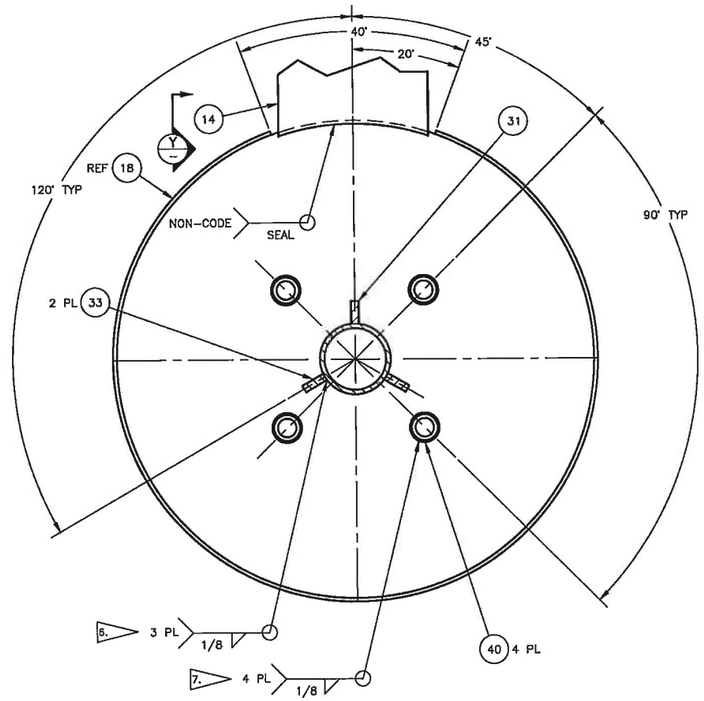

F/3 SECTION
SCALE: 1/2

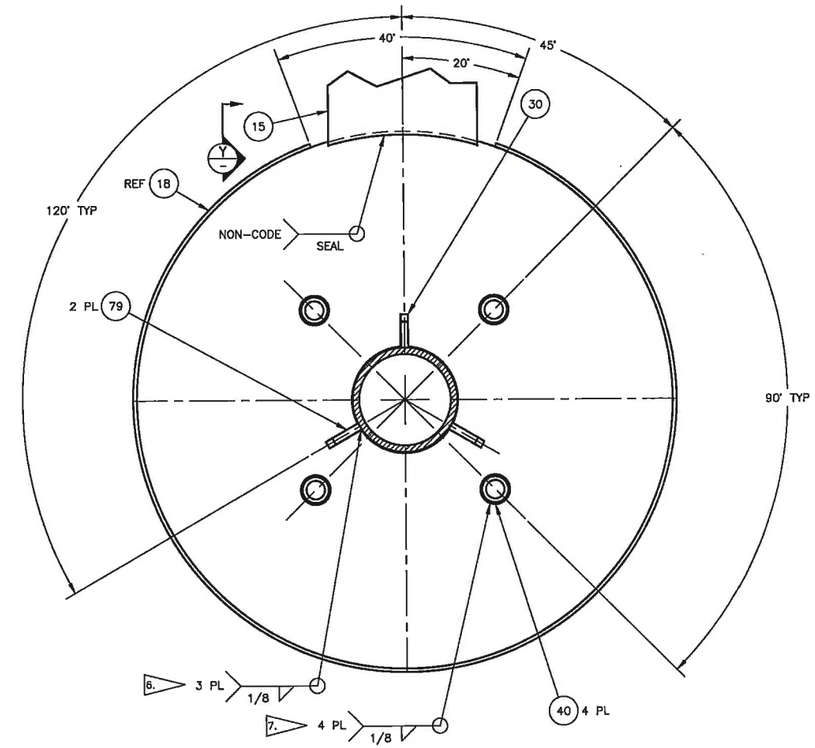

K/5 SECTION
SCALE: 1/2

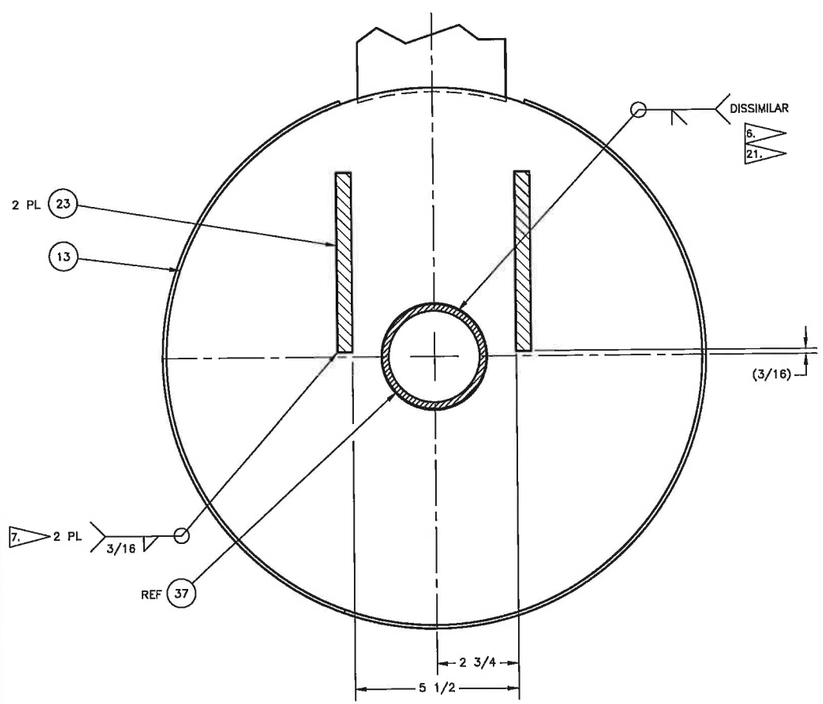

G/5 SECTION
SCALE: 1/2

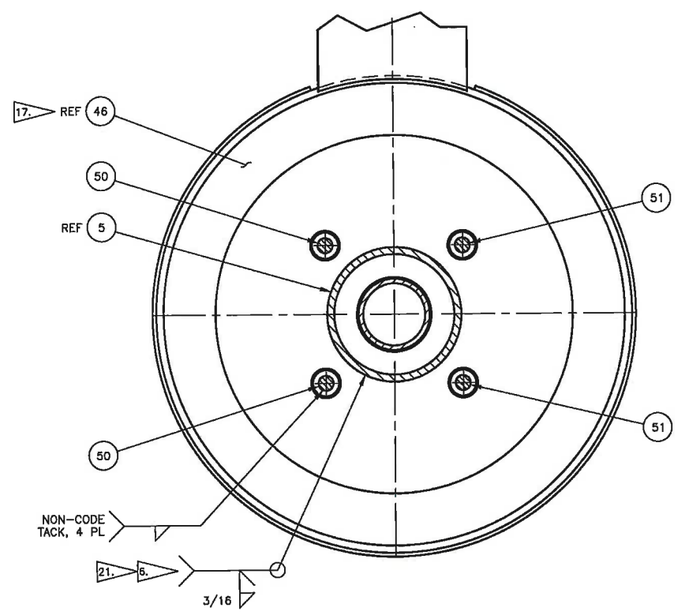

D/2 SECTION
SCALE: 1/2

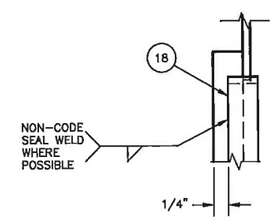

Y/– DETAIL
SCALE: 1/1

DWG NUMBER	TITLE	REF NUMBER	TITLE
		REFERENCES	

REV NO	DESCRIPTION
1	RELEASED PER EDT-882646
	REVISIONS

BLDG NO 242A
INDEX NO 9901

CAUTION: NOT COMPLETE WITHOUT CURRENT CHANGE DOCUMENTS FROM DATABASE

	NAME	DATE	COMPANY
DRAWN BY	J T FOSS		CTAES
DSGN RD CHECK	P M MCELROY		CTAES
DESIGN REVIEW	G J ROGEN		CTAES

U.S. DEPARTMENT OF ENERGY
Office of River Protection

WALL NOZZLE ASSEMBLIES
242-A PUMP ROOM

SIZE F | DRAWING NUMBER H-14-111832 | SHEET 7 | REV 1

SCALE SHOWN

STATE OF WASHINGTON
JOHN COLIN BENDIXSEN
4/29/20

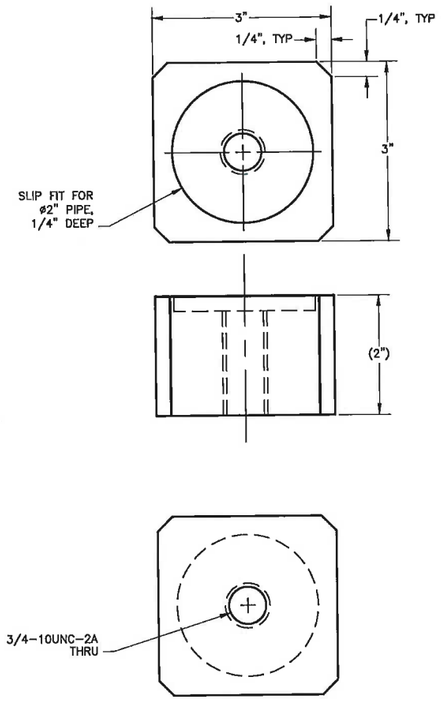

34 BLOCK – 1
SCALE: 1/1

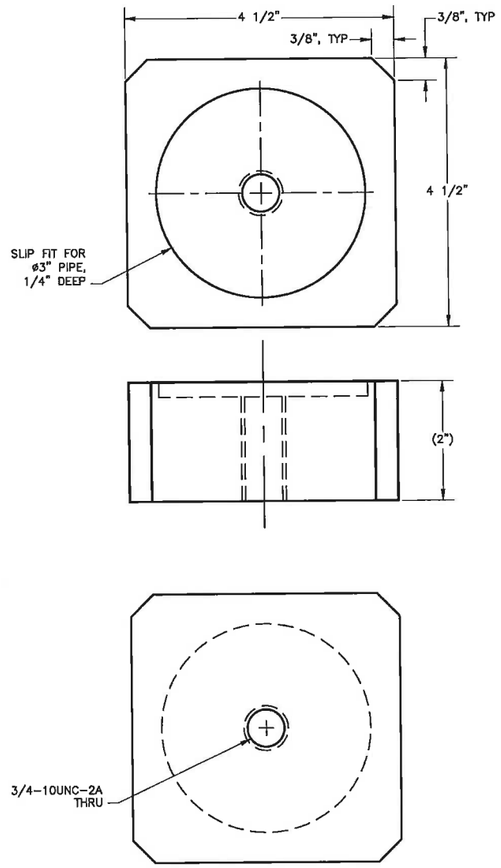

35 BLOCK – 2
SCALE: 1/1

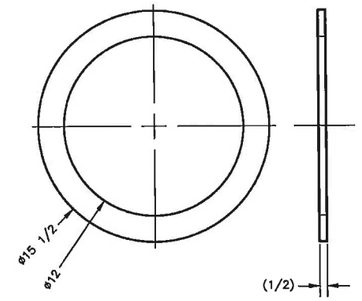

46 GASKET 1
SCALE: 1/4

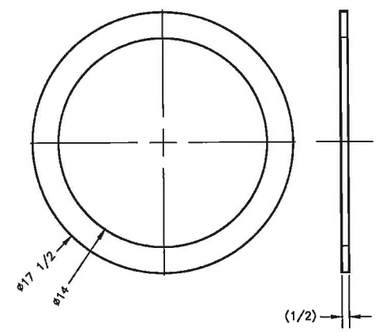

47 GASKET 2
SCALE: 1/4

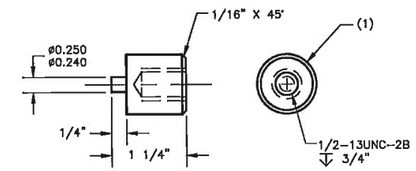

40 ALIGNMENT LUG
SCALE: 1/1

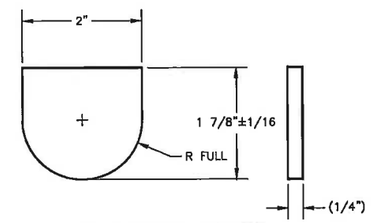

78 FULCRUM PLATE
SCALE: 1/1

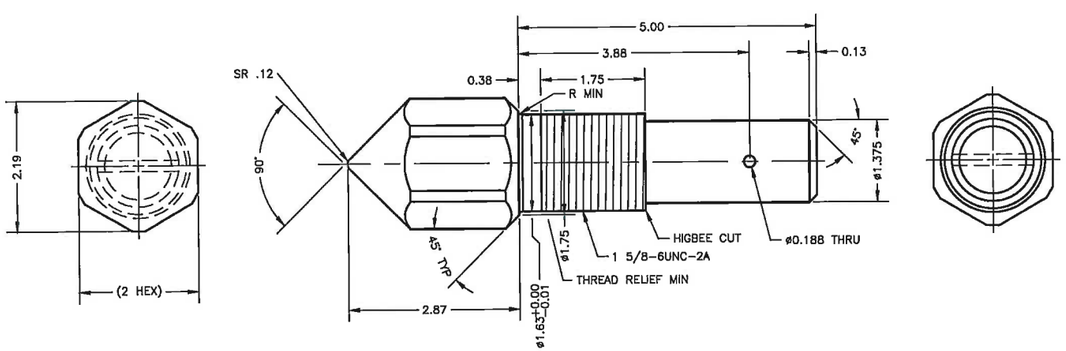

32 ATTACHMENT SCREW
SCALE: 1/1

4/29/20

REV NO	DESCRIPTION
1	RELEASED PER EDT-882646

DWG NUMBER	TITLE	REF NUMBER	TITLE
		REFERENCES	

BLDG NO 242A

INDEX NO 9901

CAUTION: NOT COMPLETE WITHOUT CURRENT CHANGE DOCUMENTS FROM DATABASE

	NAME	DATE	COMPANY
DRAWN BY	J J FOSS		CH2M
CHECKED BY	P M MCELROY		CH2M
DESIGN ENGINEER	G J BOGEN		CH2M

U.S. DEPARTMENT OF ENERGY
Office of River Protection

WALL NOZZLE ASSEMBLIES
242-A PUMP ROOM

SIZE F | DRAWING NUMBER H-14-111832 | SHEET 8 | REV 1

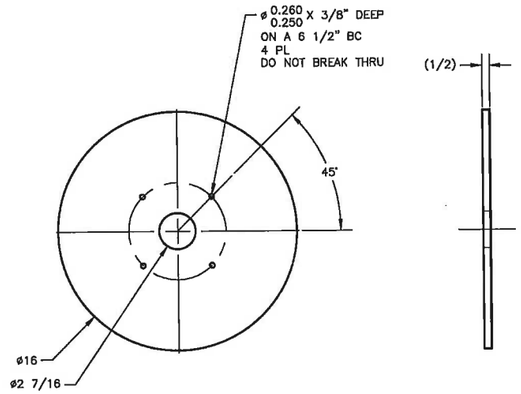

12 PLATE 1
SCALE: 1/4

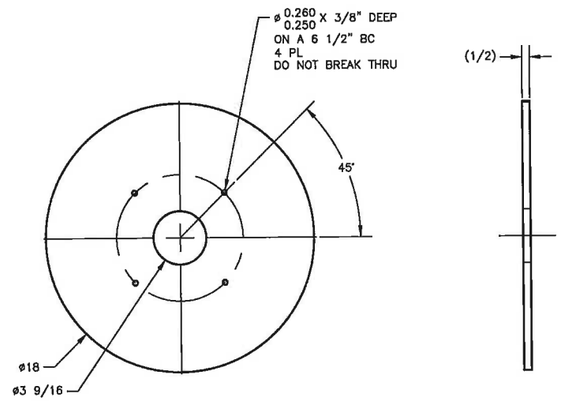

13 PLATE 2
SCALE: 1/4

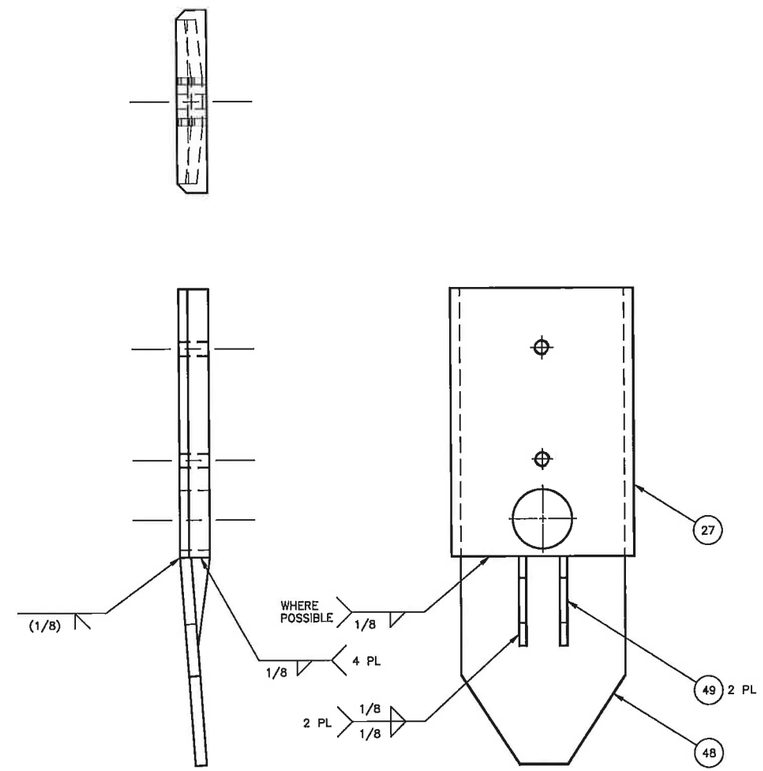

9 GUIDE WELDMENT
SCALE: 1/2

4/29/10

REF NUMBER	TITLE

DWG NUMBER	TITLE
	REFERENCES

REV NO	DESCRIPTION
1	RELEASED PER EDT-882646

CAUTION: NOT COMPLETE WITHOUT CURRENT CHANGE DOCUMENTS FROM DATABASE

BLDG NO 242A

INDEX NO 9901

	NAME	DATE	COMPANY
DRAWN BY	J T FOSS		DEMCO
ENGRG CONCURR	P M MCELROY		DEMCO
DESIGN ENGINEER	G J BOGEN		DEMCO

U.S. DEPARTMENT OF ENERGY
Office of River Protection

WALL NOZZLE ASSEMBLIES
242-A PUMP ROOM

SIZE	DRAWING NUMBER	SHEET	REV
F	H-14-111832	9	1

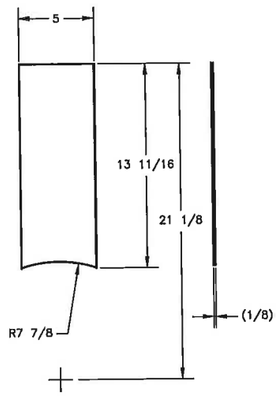

14 PLATE 3
SCALE: 1/4

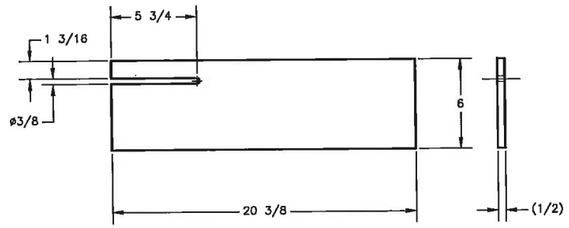

16 PLATE 5
SCALE: 1/4

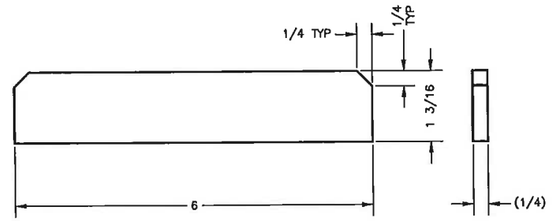

30 WING 1
SCALE: 1/1

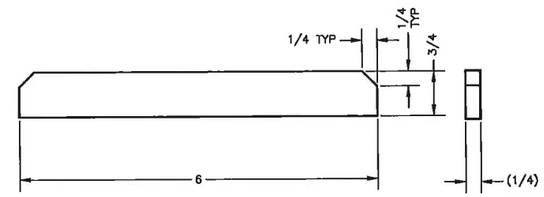

31 WING 2
SCALE: 1/1

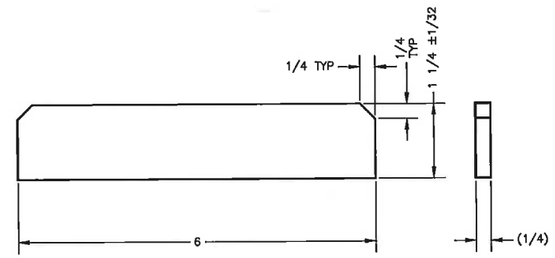

79 WING 4
SCALE: 1/1

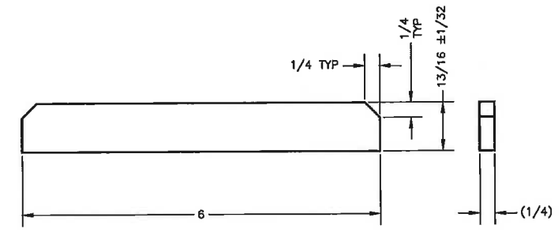

33 WING 3
SCALE: 1/1

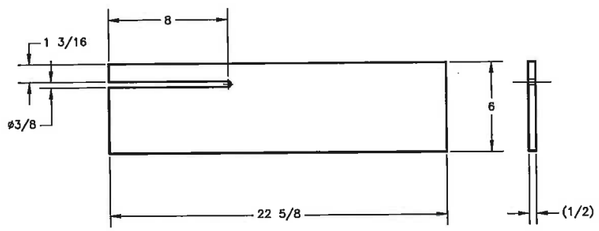

23 PLATE 9
SCALE: 1/4

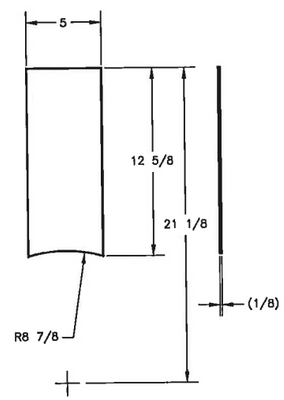

15 PLATE 4
SCALE: 1/4

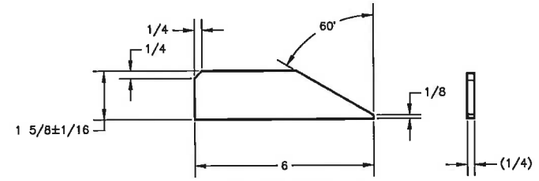

17 PLATE 6
SCALE: 1/2

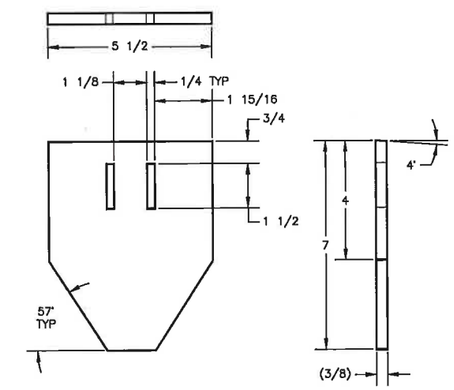

48 GUIDE PLATE
SCALE: 1/2

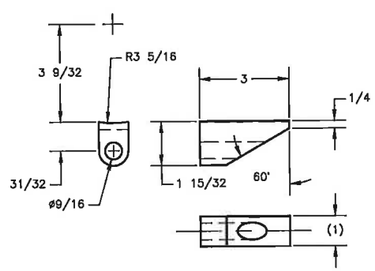

21 GUIDE BLOCK 1
SCALE: 1/2

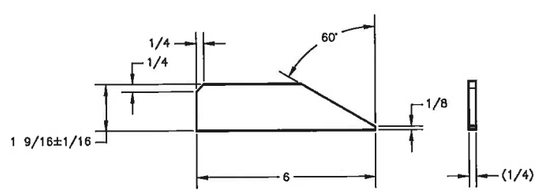

20 PLATE 7
SCALE: 1/2

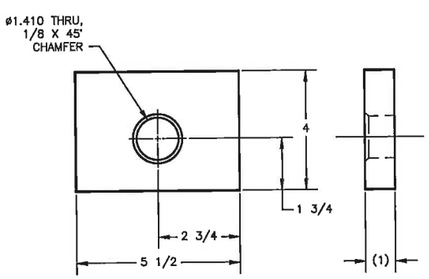

19 PLATE 8
SCALE: 1/2

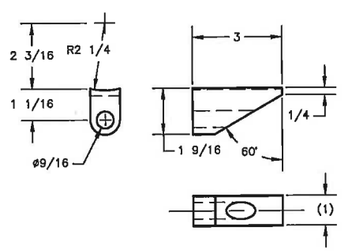

22 GUIDE BLOCK 2
SCALE: 1/2

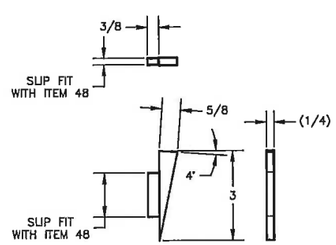

49 GUSSET
SCALE: 1/2

A/29/20

REV NO	DESCRIPTION
1	RELEASED PER EDT-882646

REVISIONS

DWG NUMBER	TITLE	REF NUMBER	TITLE

REFERENCES

CAUTION: NOT COMPLETE WITHOUT CURRENT CHANGE DOCUMENTS FROM DATABASE

BLDG NO 242A

INDEX NO 9901

	NAME	DATE	COMPANY
DRAWN BY	J. FOSS		
SQUIRED CHECKED	P. M. MCELROY		
DESIGN ENGINEER	G. J. BOGEN		

U.S. DEPARTMENT OF ENERGY
Office of River Protection

WALL NOZZLE ASSEMBLIES
242-A PUMP ROOM

SIZE F | DRAWING NUMBER H-14-111832 | SHEET 10 | REV 1

SCALE SHOWN

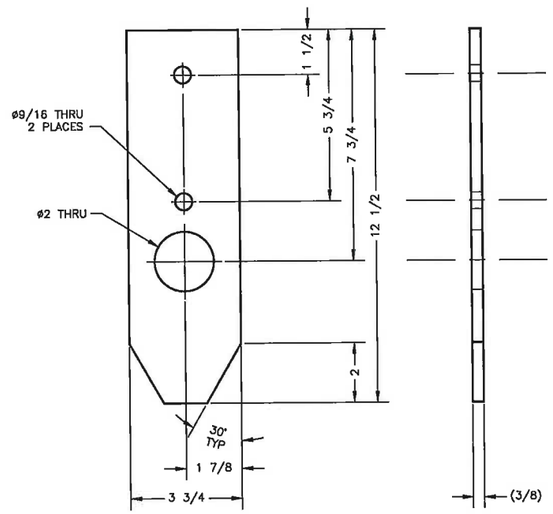

28 COUNTERWEIGHT 3
SCALE: 1/2

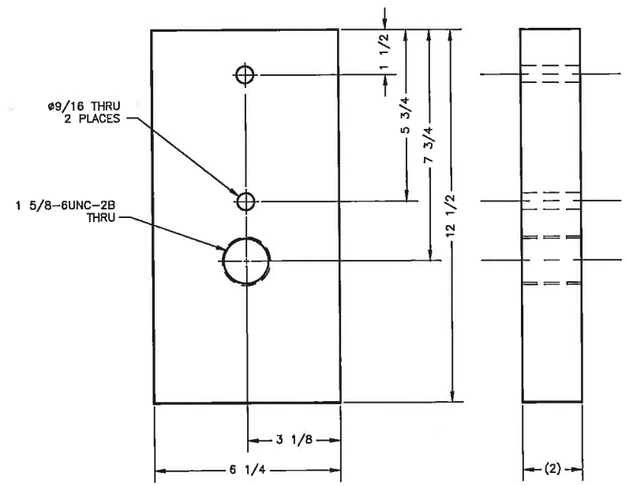

26 COUNTERWEIGHT 1
SCALE: 1/2

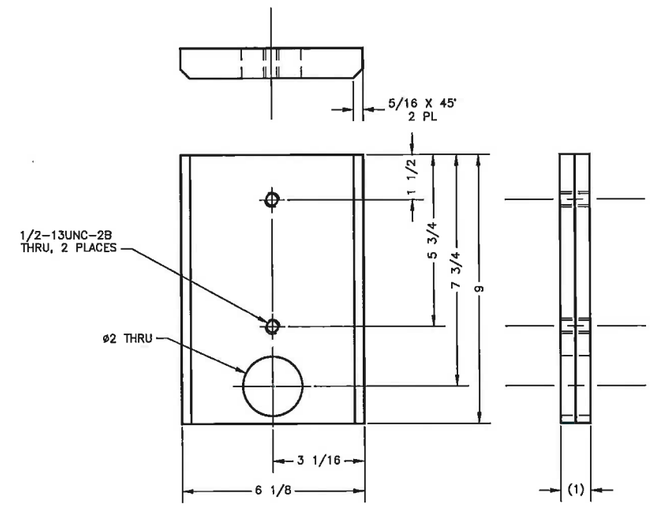

27 COUNTERWEIGHT 2
SCALE: 1/2

4/29/20

DWG NUMBER	TITLE	REF NUMBER	TITLE
		REFERENCES	

REV NO	DESCRIPTION
1	RELEASED PER EDT-882646

BLDG NO 242A

INDEX NO 9901

CAUTION: NOT COMPLETE WITHOUT CURRENT CHANGE DOCUMENTS FROM DATABASE

	NAME	DATE	COMPANY
DRAWN BY	J FOSS		CH2M
TECH REVIEWED BY	P M MCELROY		CH2M
DESIGN ENGINEER	G J BOGEN		CH2M

U.S. DEPARTMENT OF ENERGY
Office of River Protection

WALL NOZZLE ASSEMBLIES
242-A PUMP ROOM

SIZE	DRAWING NUMBER	SHEET	REV
F	H-14-111832	11	1

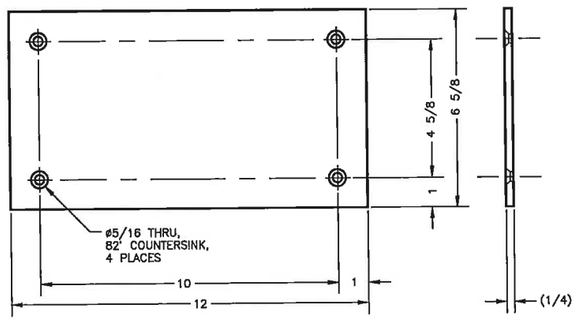

25 UHMWPE SHEET
SCALE: 1/2

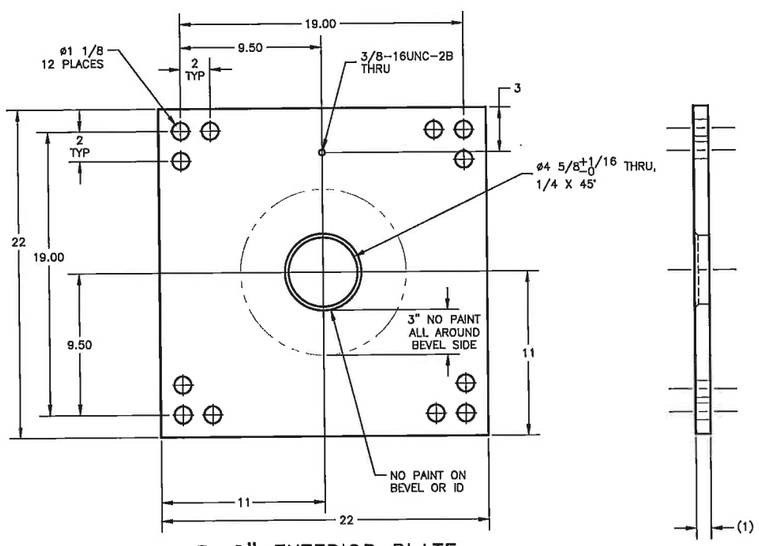

70 2" EXTERIOR PLATE
SCALE: 1/4

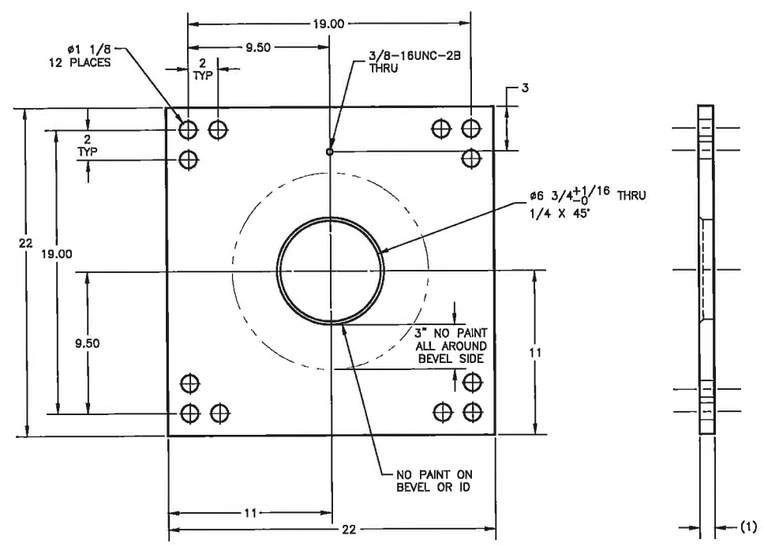

71 3" EXTERIOR PLATE
SCALE: 1/4

4/29/20

DWG NUMBER	TITLE	REF NUMBER	TITLE
		REFERENCES	

REV NO	DESCRIPTION
1	RELEASED PER EDT-882646

CAUTION: NOT COMPLETE WITHOUT CURRENT CHANGE DOCUMENTS FROM DATABASE

BLDG NO 242A

INDEX NO 9901

	NAME	DATE	COMPANY
DRAWER	J T FOSS		
CHECKER	P M MCELROY		
DESIGN ENGINEER	G J BOGEN		

U.S. DEPARTMENT OF ENERGY
Office of River Protection

WALL NOZZLE ASSEMBLIES
242-A PUMP ROOM

SIZE	DRAWING NUMBER	SHEET	REV
F	H-14-111832	12	1

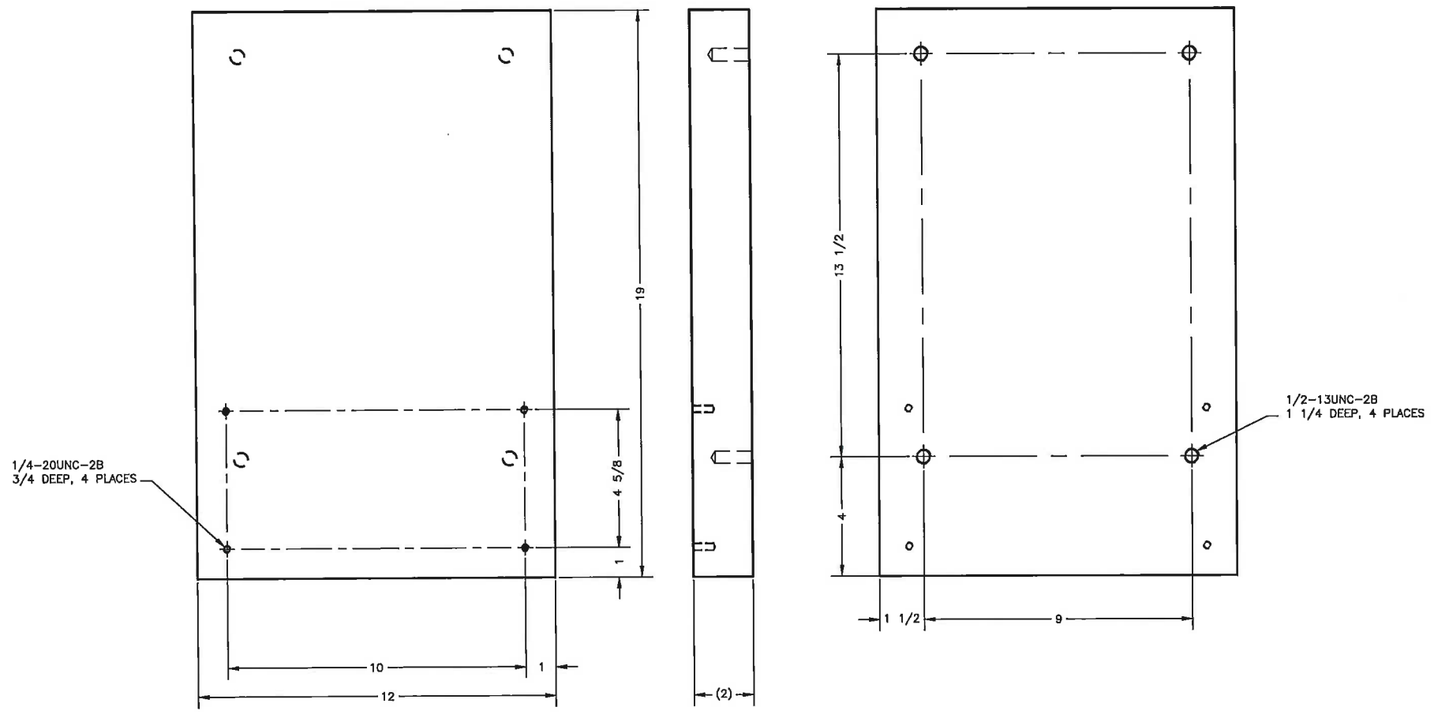

29 COUNTERWEIGHT 4
SCALE: 1/2

4/29/20

REV NO	DESCRIPTION
1	RELEASED PER EDT-882646

DWG NUMBER	TITLE

REFERENCES	
REF NUMBER	TITLE

BLDG NO 242A

INDEX NO 9901

CAUTION: NOT COMPLETE WITHOUT CURRENT CHANGE DOCUMENTS FROM DATABASE

	NAME	DATE	COMPANY
DRAWN	K J FOSS		CEARC
CHKD AND CORRECT	P M MCELROY		CEARC
DESIGN ENGINEER	G J BOGEN		CEARC

U.S. DEPARTMENT OF ENERGY
Office of River Protection

WALL NOZZLE ASSEMBLIES
242-A PUMP ROOM

SIZE	DRAWING NUMBER	SHEET	REV
F	H-14-111832	13	1

SCALE SHOWN

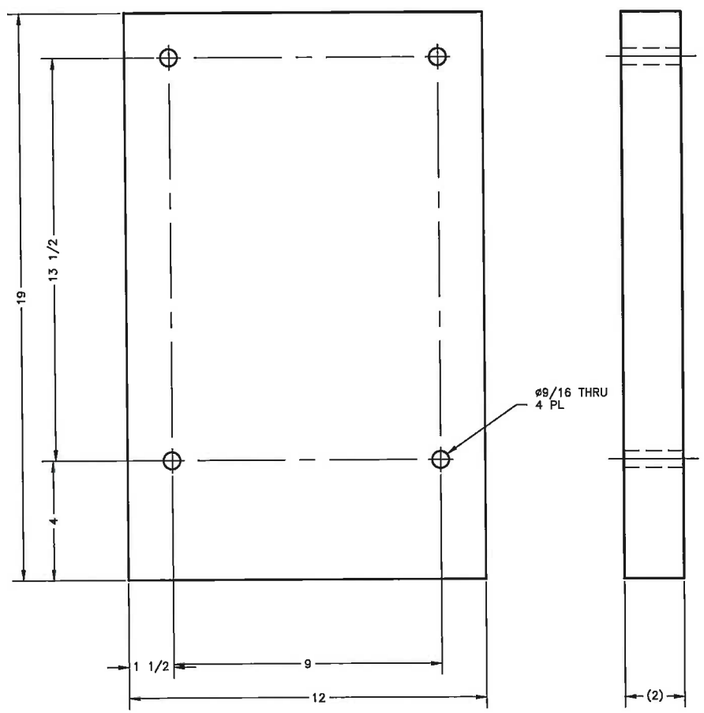

52 COUNTERWEIGHT 5
SCALE: 1/2

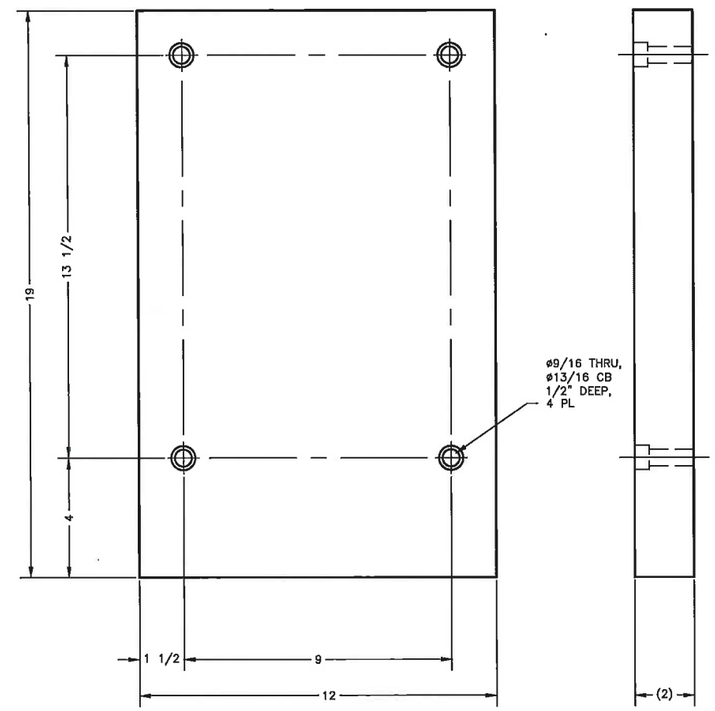

53 COUNTERWEIGHT 6
SCALE: 1/2

4/29/20

DWG NUMBER	TITLE	REF NUMBER	TITLE
		REFERENCES	

REV NO	DESCRIPTION
1	RELEASED PER EDT-882646

CAUTION: NOT COMPLETE WITHOUT CURRENT CHANGE DOCUMENTS FROM DATABASE

BLDG NO 242A

INDEX NO 9901

	NAME	DATE	COMPANY
DRAWN BY	J FOSS		CTACS
DRAFTING CHECKER	F M MCELROY		CTACS
DESIGN ENGINEER	G J BOGEN		CTACS

U.S. DEPARTMENT OF ENERGY
Office of River Protection

WALL NOZZLE ASSEMBLIES
242-A PUMP ROOM

SIZE	DRAWING NUMBER	SHEET	REV
F	H-14-111832	14	1

GENERAL NOTES: (UNLESS OTHERWISE SPECIFIED)

1. DIMENSIONS ARE IN INCHES, TOLERANCES SHALL BE AS FOLLOWS:
   FRACTIONS = ±1/8
   ANGLES = ±0.5°
2. REMOVE ALL BURRS AND BREAK SHARP EDGES.
3. CERTIFIED MATERIAL TEST REPORT (CMTR) REQUIRED FOR ALL PIPING MATERIALS.
4. SLOPE DOWN 1/8" PER 12" RUN (0.6'), IN DIRECTION OF ARROW.
5. PREPARE AND PAINT LIFT BAIL AND OPERATING SCREW HEADS. PRIME SURFACES WITH A SINGLE COAT OF INDUSTRIAL GRADE STEEL PRIMER. APPLY TWO FINISH COATS OF WATERBORNE ACRYLIC ENAMEL (AMERCOAT 220). FINISH COLOR SHALL BE YELLOW FOR LIFT BAILS AND CONNECTOR OPERATING SCREW HEAD. APPLY PAINT PER THE MANUFACTURER'S SPECIFICATIONS. POWDER COATING MAY BE SUBSTITUTED FOR PAINT.
6. LOCATE IDENTIFICATION LABELING AND WEIGHT LABELING IN APPROXIMATE LOCATION AS SHOWN.
   TEXT CONTENTS: H-14-111834 REV 1 XXX LBS, 41-5
   TEXT TYPE: BLOCK
   TEXT MATERIAL: ACRYLIC ENAMEL
   TEXT COLORS: BLACK ON YELLOW BACKGROUND
   TEXT SIZE: 1/2" HIGH CHARACTERS
7. ENSURE THAT THE COMPLETED JUMPER ASSEMBLY HANGS LEVEL WITHIN TWO DEGREES AS SUPPORTED BY THE LIFTING BAIL LOCATION. RELOCATE LIFTING BAIL TO BALANCE JUMPER BEFORE FINAL WELDING TO SUPPORT STRUCTURE. JUMPER ASSEMBLY SHOULD BE BIASED TO LEAN TOWARDS THE ANGLE SUPPORT LEG.
8. WEIGH THE FINAL JUMPER ASSEMBLY AND PAINT THE APPLICABLE ASSEMBLY WEIGHT, ROUNDED UP TO THE NEAREST TEN POUNDS, IN THE PAINT IDENTIFICATION LABEL.
9. FABRICATE AND TEST THE JUMPER ASSEMBLY IN ACCORDANCE WITH RPP-14541, JUMPER FABRICATION AND TESTING SPECIFICATION FOR TANK FARMS, UNLESS OTHERWISE NOTED.
10. WELD AND INSPECT PIPING IN ACCORDANCE WITH ASME B31.3, 2016 FOR CATEGORY NORMAL FLUID SERVICE. ALL WELDS SHALL BE VT ON FINAL PASS UNLESS OTHERWISE SPECIFIED. IN ADDITION, NOT LESS THAN 5% OF CIRCUMFERENTIAL BUTT AND MITER GROOVE CONTAINMENT BOUNDARY WELDS SHALL BE EXAMINED FULLY BY RANDOM RADIOGRAPHY (RT) IN ACCORDANCE WITH ASME B31.3, 2016, PARAGRAPH 344.5. USE OF BACKING RINGS IS NOT PERMITTED.
11. WELD AND INSPECT STRUCTURAL WELDS IN ACCORDANCE WITH AWS D1.1, 2017 OR AWS D1.6, 2007 STATICALLY LOADED CRITERIA. ALL WELDS SHALL BE VT ON FINAL PASS UNLESS OTHERWISE SPECIFIED. WELD PROCEDURES AND QUALIFICATIONS PER ASME B&PV CODE SECTION IX, 2017 ARE ACCEPTABLE.
12. DESIGN PRESSURE FOR THE JUMPER ASSEMBLY PIPING IS 400 PSIG. PERFORM A HYDROSTATIC PRESSURE TEST TO 600 +10/-0 PSIG. MAINTAIN PRESSURE FOR 10 MINUTES AND PERFORM VISUAL INSPECTION OF WELDS AND ASSOCIATED EQUIPMENT. VERIFY NO LEAKAGE IS PRESENT. THE TEST PRESSURE HAS BEEN DETERMINED IN ACCORDANCE WITH ASME B31.3, 2016, PARA 345.4.2(b), AT THE DESIGN TEMPERATURE OF 200°F.
13. WHERE A JUMPER JIG IS USED, QUALITY CONTROL INSPECTION SHALL DETERMINE WHETHER THE CRITICAL DIMENSIONS HAVE BEEN MET. INSPECT THE JIG DIMENSIONS PRIOR TO FABRICATION AND AFTER FABRICATION. VERIFY THE JUMPER CAN BE REMOVED AND REINSTALLED INTO THE JIG WITHOUT BINDING.
14. CONNECTOR HEADS SHALL BE IDENTIFIED WITH THE APPROPRIATE LETTER DESIGNATION FOR THAT SPECIFIC LOCATION. LETTER TEXT TO BE BLOCK ACRYLIC ENAMEL LETTERING, (BLACK ON YELLOW BACKGROUND), 1" TO 2" TALL AND POSITIONED ON TOP OF ADJACENT PIPE FOR CONNECTORS.
15. IN-PROCESS EXAMINATION SHALL BE PERFORMED IN ACCORDANCE WITH ASME B31.3, 2016 SECTION 344.7. LIQUID PENETRANT EXAMINATION SHALL BE PERFORMED ON THE ROOT PASS.
16. JUMPER INTERNALS (PRIMARY PRESSURE BOUNDARY) WHEN INSTALLED IS A CLASS 1, DIVISION 1, GROUP B HAZARDOUS LOCATION PER HNF-SD-WM-HC-017.
17. PRIOR TO LOCATING CONNECTOR HEADS (ITEMS 8 AND 9) AS DIMENSIONED VERIFICATION/AUTHORIZATION FROM THE TANK FARM CONTRACTOR IS REQUIRED. THE NECESSARY FIELD FIT DIMENSION IS YET TO BE CONFIRMED VIA LASER SCAN.
18. WELD IS A PIPING ATTACHMENT WELD. WELD AND INSPECT IN ACCORDANCE WITH ASME B31.3, 2016 FOR CATEGORY NORMAL FLUID SERVICE. WELD SHALL BE VT ON FINAL PASS, NO RT REQUIRED.

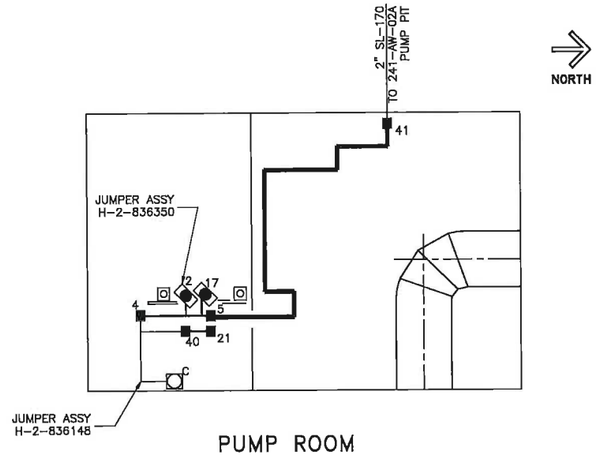

PUMP ROOM
242-A BUILDING
KEY PLAN
SCALE: NONE

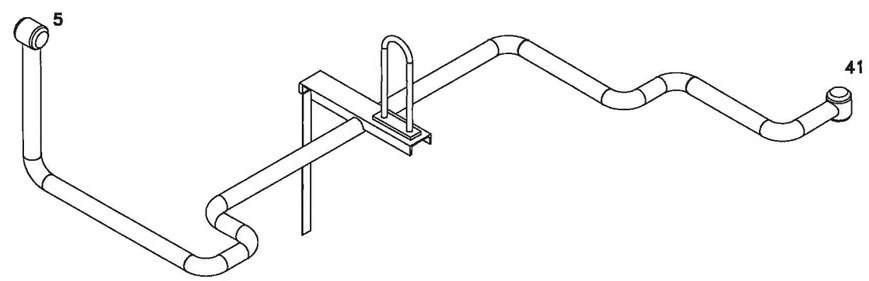

ISO VIEW
SCALE: NTS

PARTS LIST/MATERIAL LIST

QTY -020	QTY -010	PARTS / DASH NUMBER	NOMENCLATURE/DESCRIPTION	MATERIAL/REFERENCE	SHEET	ITEM NO
	X	-010	ASSEMBLY 41 TO 5		2	1
X	1	-020	DUNNAGE WELDMENT		2	2
						3
						4
						5
						6
	1	H-2-90161-060	LIFTING BAIL ASSEMBLY		2	7
	1	H-2-32420-010	2" HORIZONTAL CONNECTOR ASSEMBLY, ITEM 1, GASKET TYPE I		2	8
	1	H-2-32420-020	2" VERTICAL, CONNECTOR ASSEMBLY, ITEM 2, GASKET TYPE 1		2	9
	8		ELBOW, 2"ø SCH 40, 90°, LR, BW, SEAMLESS	ASTM A403 WP 304L	2	10
	AR		PIPE, 2"ø SCH 40, SEAMLESS	ASTM A312 TP 304L	2	11
1			CHANNEL, C4 X 5.4, 21" LONG	ASTM A276 OR A479 304/304L	2	12
	1		ANGLE, L1 1/2 X 1 1/2 X 3/16, 23" LONG	ASTM A276 OR A479 304/304L	2	13
2		-001	STIRRUP PLATE, 3/16 THK	ASTM A240 TP 304L	2	14

DWG NUMBER	TITLE
H-14-111830	DST WASTE TRANSFER LINE REPLACEMENT 241-AW TO 242-A EVAPORATOR DRAWING LIST

REF NUMBER	TITLE
H-2-99009	PIPING JUMPER ARRANGEMENT PUMP ROOM
RPP-CALC-63213	ASME B31.3 ANALYSES OF THE 41 TO 5 AND 43 TO 13A JUMPERS FOR THE 242-A EVAPORATOR PUMP ROOM
RPP-CALC-63214	242-A EVAPORATOR PUMP ROOM JUMPERS SUPPORTING ANALYSES
H-2-90161	STANDARD RIGID LIFTING BAILS
H-2-32420	ASSEMBLY HORIZONTAL & VERTICAL 2" CONNECTOR

REFERENCES

NEXT USED ON H-2-99009

REV NO	DESCRIPTION
0	INITIAL RELEASE PER EDT 882588

REVISIONS

BLDG NO 242-A

MODEL NO 8405

CAUTION: NOT COMPLETE WITHOUT CURRENT CHANGE DOCUMENTS FROM DATABASE

	NAME	DATE	COMPANY
DRAFTER	P. MCELROY	4-28-20	CH2M
DESIGN VERIFIER	JT FOSS	4-28-20	CH2M
DESIGN ENGINEER	J. HARRINGTON	4-28-20	CH2M

4/29/20

U.S. DEPARTMENT OF ENERGY
Office of River Protection

JUMPER ASSEMBLY
41 TO 5
242-A PUMP ROOM

SIZE	DRAWING NUMBER	SHEET	REV
F	H-14-111834	01	0

SCALE SHOWN

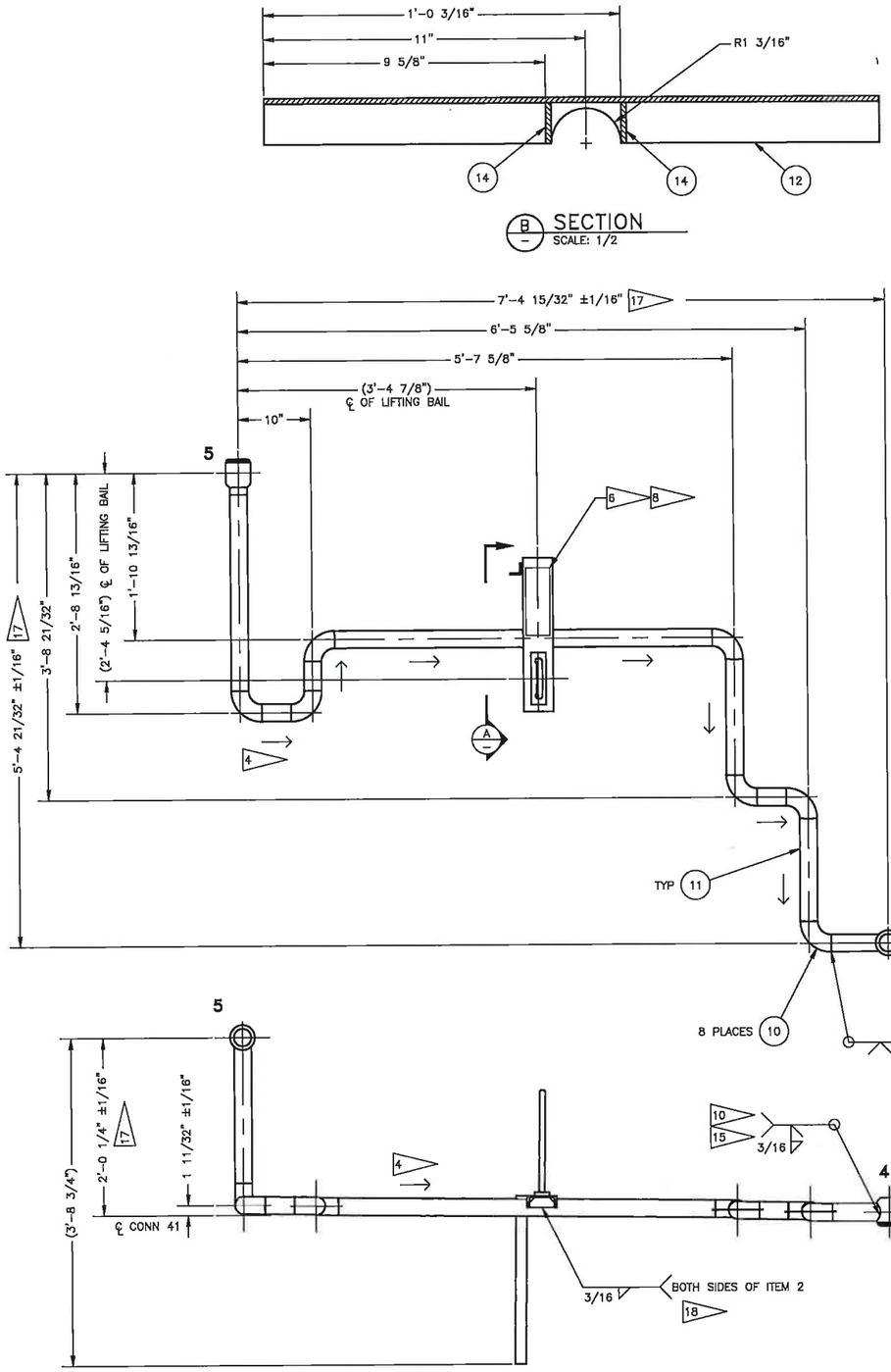

1 ASSEMBLY 41 TO 5 14
SCALE: 1/8

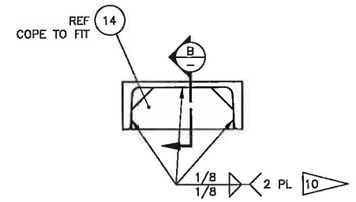

2 DUNNAGE WELDMENT
SCALE: 1/2

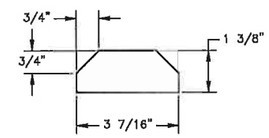

14 STIRRUP PLATE
SCALE: 1/2

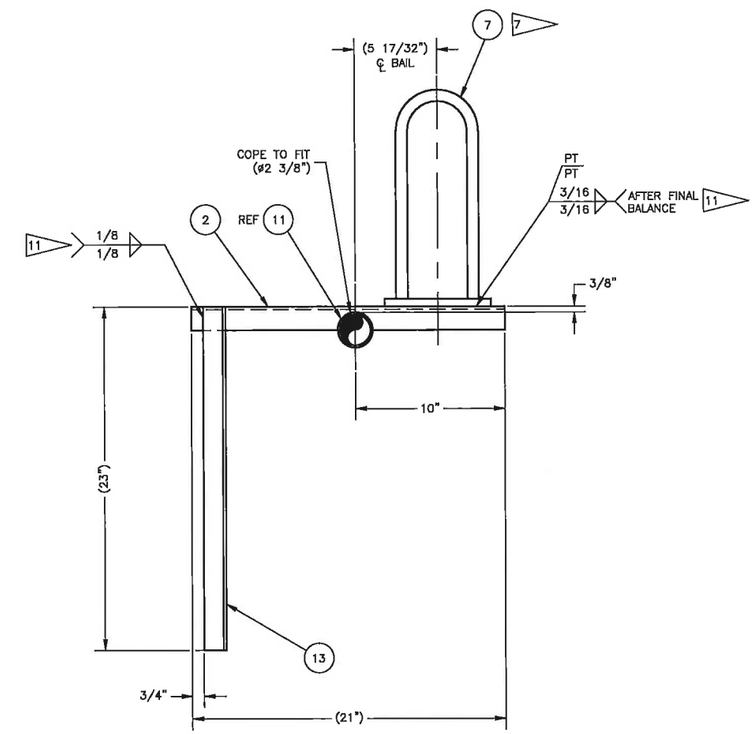

A SECTION
SCALE: 1/4

4/29/20

REV NO	DESCRIPTION
0	INITIAL RELEASE PER EDT 882588

REVISIONS

DWG NUMBER	TITLE

DRAWING TRACEABILITY LIST

REF NUMBER	TITLE

REFERENCES

NEXT USED ON

BLDG NO 242-A

INDEX NO 8405

CAUTION: NOT COMPLETE WITHOUT CURRENT CHANGE DOCUMENTS FROM DATABASE

	NAME	DATE	COMPANY
DRAWN	L MCELROY	4-28-20	CH2M
DESIGN ENGINEER	JT FOSS	4-28-20	CH2M
DESIGN REVIEWER	J HARRINGTON	4-28-20	CH2M

U.S. DEPARTMENT OF ENERGY
Office of River Protection

JUMPER ASSEMBLY
41 TO 5
242-A PUMP ROOM

SIZE	DRAWING NUMBER	SHEET	REV
F	H-14-111834	02	0

SCALE SHOWN

GENERAL NOTES: (UNLESS OTHERWISE SPECIFIED)

1. DIMENSIONS ARE IN INCHES, TOLERANCES SHALL BE AS FOLLOWS:
   FRACTIONS = ±1/8
   ANGLES = ±0.5°
2. REMOVE ALL BURRS AND BREAK SHARP EDGES.
3. CERTIFIED MATERIAL TEST REPORT (CMTR) REQUIRED FOR ALL PIPING MATERIALS.
4. DIP TUBE TO BE WELDED WITH 45° CUT PERPENDICULAR TO JUMPER AS SHOWN.
5. PREPARE AND PAINT LIFT BAIL AND OPERATING SCREW HEADS. PRIME SURFACES WITH A SINGLE COAT OF INDUSTRIAL GRADE STEEL PRIMER. APPLY TWO FINISH COATS OF WATERBORNE ACRYLIC ENAMEL (AMERCOAT 220). FINISH COLOR SHALL BE YELLOW FOR LIFT BAILS AND CONNECTOR OPERATING SCREW HEAD. APPLY PAINT PER THE MANUFACTURER'S SPECIFICATIONS. POWDER COATING MAY BE SUBSTITUTED FOR PAINT.
6. LOCATE IDENTIFICATION LABELING AND WEIGHT LABELING IN APPROXIMATE LOCATION AS SHOWN.
   TEXT CONTENTS: H-14-111835 REV 1 XXX LBS, 43-13A
   TEXT TYPE: BLOCK
   TEXT MATERIAL: ACRYLIC ENAMEL
   TEXT COLORS: BLACK ON YELLOW BACKGROUND
   TEXT SIZE: 1" HIGH CHARACTERS
7. ENSURE THAT THE COMPLETED JUMPER ASSEMBLY HANGS LEVEL WITHIN TWO DEGREES AS SUPPORTED BY THE LIFTING BAIL LOCATION. RELOCATE LIFTING BAIL TO BALANCE JUMPER BEFORE FINAL WELDING TO SUPPORT STRUCTURE.
8. WEIGH THE FINAL JUMPER ASSEMBLY AND PAINT THE APPLICABLE ASSEMBLY WEIGHT, ROUNDED UP TO THE NEAREST TEN POUNDS, IN THE PAINT IDENTIFICATION LABEL.
9. FABRICATE AND TEST THE JUMPER ASSEMBLY IN ACCORDANCE WITH RPP-14541, JUMPER FABRICATION AND TESTING SPECIFICATION FOR TANK FARMS, UNLESS OTHERWISE NOTED.
10. WELD AND INSPECT PIPING IN ACCORDANCE WITH ASME B31.3, 2016 FOR CATEGORY NORMAL FLUID SERVICE. ALL WELDS SHALL BE VT ON FINAL PASS UNLESS OTHERWISE SPECIFIED. IN ADDITION, NOT LESS THAN 5% OF CIRCUMFERENTIAL BUTT AND MITER GROOVE CONTAINMENT BOUNDARY WELDS SHALL BE EXAMINED FULLY BY RANDOM RADIOGRAPHY (RT) IN ACCORDANCE WITH ASME B31.3, 2016, PARAGRAPH 344.5. USE OF BACKING RINGS IS NOT PERMITTED.
11. WELD AND INSPECT STRUCTURAL WELDS IN ACCORDANCE WITH AWS D1.1, 2017 OR AWS D1.6, 2007 STATICALLY LOADED CRITERIA. ALL WELDS SHALL BE VT ON FINAL PASS UNLESS OTHERWISE SPECIFIED. WELD PROCEDURES AND QUALIFICATIONS PER ASME B&PV CODE SECTION IX, 2017 ARE ACCEPTABLE.
12. DESIGN PRESSURE FOR THE JUMPER ASSEMBLY PIPING IS 400 PSIG. PERFORM A HYDROSTATIC PRESSURE TEST TO 600 +10/-0 PSIG. MAINTAIN PRESSURE FOR 10 MINUTES AND PERFORM VISUAL INSPECTION OF WELDS AND ASSOCIATED EQUIPMENT. VERIFY NO LEAKAGE IS PRESENT. THE TEST PRESSURE HAS BEEN DETERMINED IN ACCORDANCE WITH ASME B31.3, 2016, PARA 345.4.2(b), AT THE DESIGN TEMPERATURE OF 200°F.
13. WHERE A JUMPER JIG IS USED, QUALITY CONTROL INSPECTION SHALL DETERMINE WHETHER THE CRITICAL DIMENSIONS HAVE BEEN MET. INSPECT THE JIG DIMENSIONS PRIOR TO FABRICATION AND AFTER FABRICATION. VERIFY THE JUMPER CAN BE REMOVED AND REINSTALLED INTO THE JIG WITHOUT BINDING.
14. CONNECTOR HEADS SHALL BE IDENTIFIED WITH THE APPROPRIATE LETTER DESIGNATION FOR THAT SPECIFIC LOCATION. LETTER TEXT TO BE BLOCK ACRYLIC ENAMEL LETTERING, (BLACK ON YELLOW BACKGROUND), 1" TO 2" TALL AND POSITIONED ON TOP OF ADJACENT PIPE FOR CONNECTORS.
15. IN-PROCESS EXAMINATION SHALL BE PERFORMED IN ACCORDANCE WITH ASME B31.3, 2016 SECTION 344.7. LIQUID PENETRANT EXAMINATION SHALL BE PERFORMED ON THE ROOT PASS.
16. JUMPER INTERNALS (PRIMARY PRESSURE BOUNDARY) WHEN INSTALLED IS A CLASS 1, DIVISION 1, GROUP B HAZARDOUS LOCATION PER HNF-SD-WM-HC-017.
17. PRIOR TO LOCATING CONNECTOR HEADS (ITEMS 8 AND 9) AS DIMENSIONED VERIFICATION/AUTHORIZATION FROM THE TANK FARM CONTRACTOR IS REQUIRED. THE NECESSARY FIELD FIT DIMENSION IS YET TO BE CONFIRMED VIA LASER SCAN.
18. WELD IS A PIPING ATTACHMENT WELD. WELD AND INSPECT IN ACCORDANCE WITH ASME B31.3, 2016 FOR CATEGORY NORMAL FLUID SERVICE. WELD SHALL BE VT ON FINAL PASS, NO RT REQUIRED.

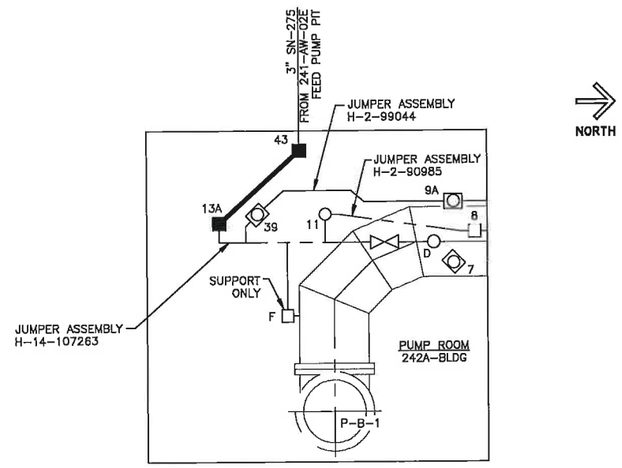

PUMP ROOM
242-A BUILDING
KEY PLAN
SCALE: NONE

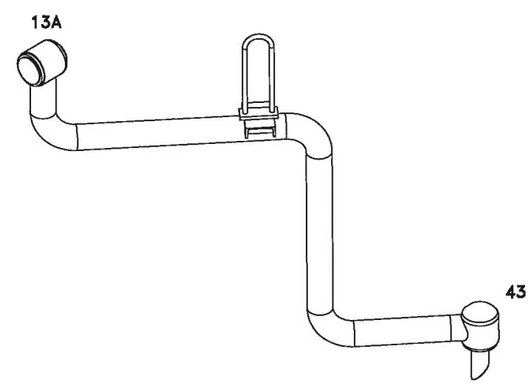

ISO VIEW
SCALE: NTS

PARTS LIST/MATERIAL LIST

QTY -020	QTY -010	PARTS / DASH NUMBER	NOMENCLATURE/DESCRIPTION	MATERIAL/REFERENCE	SHEET	ITEM NO
	X	-010	ASSEMBLY 43 TO 13A		2	1
X		-020	DUNNAGE WELDMENT		2	2
						3
						4
						5
	AR		PIPE, 2" SCH 40, SEAMLESS	ASTM A312 TP 304L	2	6
	1	H-2-90161-060	LIFTING BAIL ASSEMBLY		2	7
	1	H-2-32430-010	3" HORIZONTAL CONNECTOR ASSEMBLY, ITEM 1, GASKET TYPE I		2	8
	1	H-2-32430-050	3" VERTICAL, CONNECTOR ASSEMBLY, ITEM 5, GASKET TYPE 1, 3" IN 2" OUT		2	9
	3		ELBOW, 3"ø SCH 40, 90°, LR, BW, SEAMLESS	ASTM A403 WP 304L	2	10
	AR		PIPE, 3"ø SCH 40, SEAMLESS	ASTM A312 TP 304L	2	11
1			CHANNEL, C4 X 5.4, 6" LONG	ASTM A276 OR A479 304/304L	2	12
2		-001	STIRRUP PLATE, 3/16 THK	ASTM A240 TP 304L	2	13

REF NUMBER	TITLE
H-2-99009	PIPING JUMPER ARRANGEMENT PUMP ROOM
RPP-CALC-63213	ASME B31.3 ANALYSES OF THE 41 TO 5 AND 43 TO 13A JUMPERS FOR THE 242-A EVAPORATOR PUMP ROOM
RPP-CALC-63214	242-A EVAPORATOR PUMP ROOM JUMPERS SUPPORTING ANALYSES
H-2-90161	STANDARD RIGID LIFTING BAILS
H-2-32430	ASSEMBLY HORIZ AND VERT CONN 3" CONNECTOR

REFERENCES

DWG NUMBER	TITLE
H-14-111830	DST WASTE TRANSFER LINE REPLACEMENT 241-AW TO 242-A EVAPORATOR DRAWING LIST

REV NO	DESCRIPTION
0	INITIAL RELEASE PER EDT 882568

REVISIONS

4-29-20

BLDG NO 242-A

INDEX NO 8405

CAUTION: NOT COMPLETE WITHOUT CURRENT CHANGE DOCUMENTS FROM DATABASE

	NAME	DATE	COMPANY
DRAFTING	JJ FOSS	8-16-19	DOE
DRAFTING CHECKER			
DESIGN AUTHORITY			

U.S. DEPARTMENT OF ENERGY
Office of River Protection

JUMPER ASSEMBLY
43 TO 13A
242-A PUMP ROOM

SIZE	DRAWING NUMBER	SHEET	REV
F	H-14-111835	01	0

SCALE SHOWN

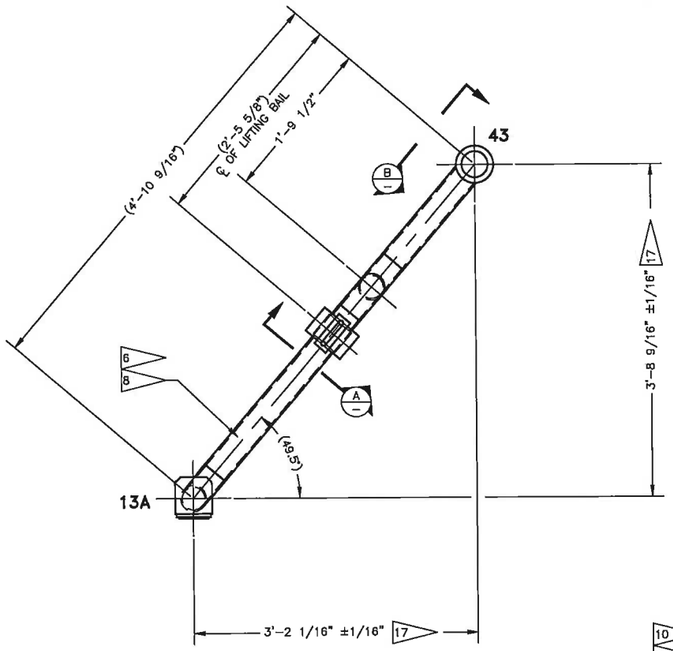

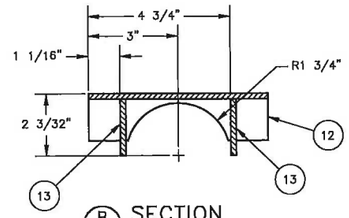

B SECTION
SCALE: 1/2

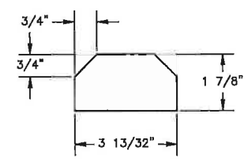

13 STIRRUP PLATE
SCALE: 1/2

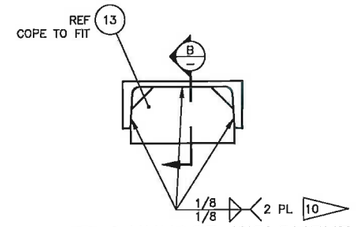

2 DUNNAGE WELDMENT
SCALE: 1/2

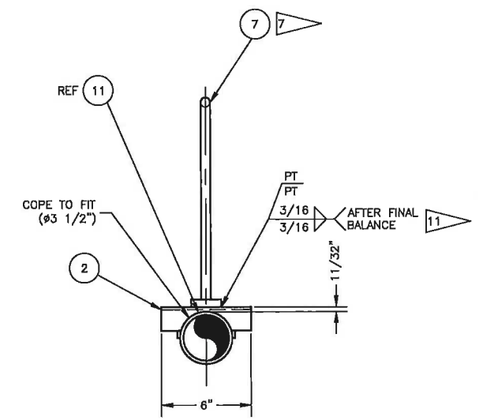

A SECTION
SCALE: 1/4

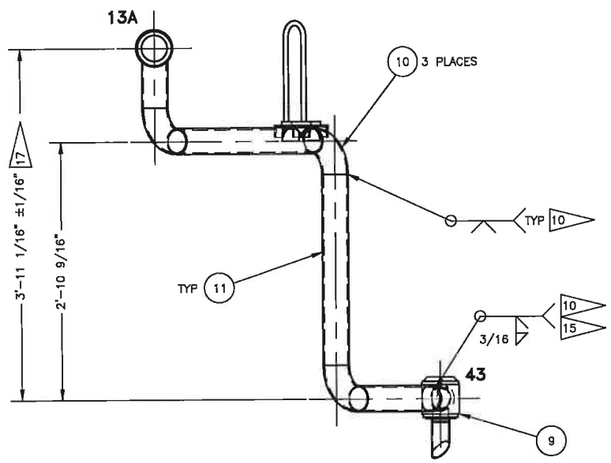

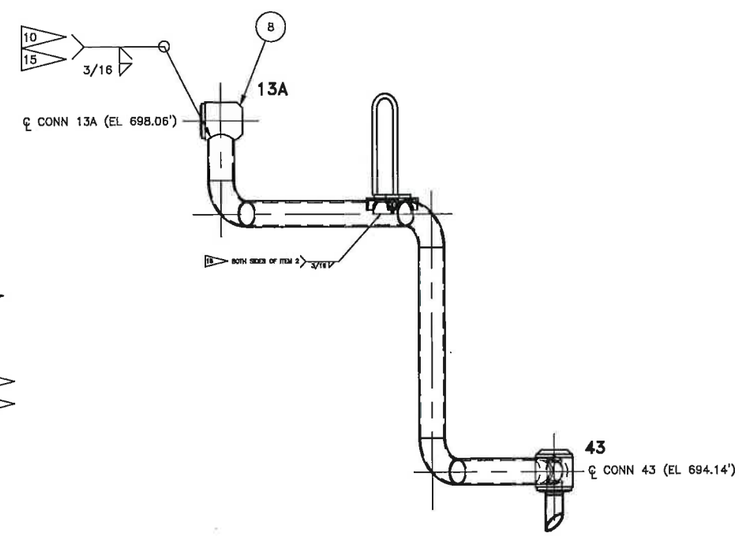

1 ASSEMBLY 43 TO 13A
SCALE: 1/8 14

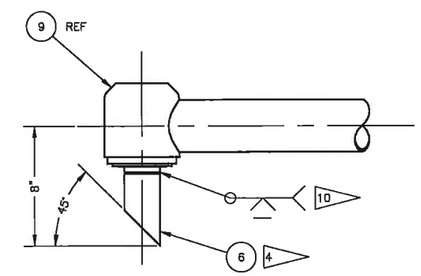

B VIEW
SCALE: 1/4

4/29/20

REV NO	DESCRIPTION
0	INITIAL RELEASE PER EDT 882588

DWG NUMBER	TITLE	REF NUMBER	TITLE
		REFERENCES	

BLDG NO 242-A
INDEX NO 8405

CAUTION: NOT COMPLETE WITHOUT CURRENT CHANGE DOCUMENTS FROM DATABASE

	NAME	DATE	COMPANY
DRAFTING	JT COSS	8-16-19	
DRAFTING CHECKER			
DESIGN AUTHORITY			

U.S. DEPARTMENT OF ENERGY
Office of River Protection

JUMPER ASSEMBLY
43 TO 13A
242-A PUMP ROOM

SIZE	DRAWING NUMBER	SHEET	REV
F	H-14-111835	02	0

MODIFICATION TRAVELER

Prepared For the U.S. Department of Energy, Assistant Secretary for Environmental Management
By Washington River Protection Solutions, LLC., PO Box 850, Richland, WA 99352
Contractor For U.S. Department of Energy, Office of River Protection, under Contract DE-AC27-08RV14800

TRADEMARK DISCLAIMER: Reference herein to any specific commercial product, process, or service by trade name, trademark, manufacturer, or otherwise, does not necessarily constitute or imply its endorsement, recommendation, or favoring by the United States government or any agency thereof or its contractors or subcontractors. Printed in the United States of America.

Release Stamp

DATE: Mar 19,2020 HANFORD RELEASE

1. **MT No:** MT-50400 **Rev.** 01

2. **Title:**
242-A Evaporator Waste Transfer Line Replacement

SECTION I REQUEST FOR MODIFICATION

3. **Requested Completion Date (Optional):** 10/31/2018

4. **CACN (optional):**

Clearance Review Restriction Type: undefined

5. **Project Number:** ☐N/A T1P207

6. **Design Type:** ☒I ☐II ☐III ☐IV ☐V ☐VI

7. **Project Type:** Project Category 2

8. **Workflow Approval Status**: Design Inputs Approved

9. **Design Authority Designator:**
PRJ - 242-A TRANSFER LINE REPLACEMENT PROJECT

10. **Related Structures, Systems, and Components**

a. **Related Building/Facilities** ☐N/A	b. **Related Systems** ☐N/A	c. **Related Equipment ID Nos. (EIN)** ☐N/A
241-AW	241-WT	AW02A-WT-WTL-SL-170
241-AW-02A	242A	AW02A-WT-WTL-SL-171
241-AW-02E	242A-SL	AW02E-WT-WTL-SN-269
241-AW-B	242A-SN	AW02E-WT-WTL-SN-270
242-A		AW02E-WT-WTL-SN-275
		AWVPB-WT-WTL-SL-167
		AWVPB-WT-WTL-SL-172

11. **Problem Description**

Recent pneumatic testing on the encasement of SL-167 has determined that it cannot maintain pressure, and therefore cannot be used to compliantly transfer waste. Recent visual inspection of SL-168 (the back-up slurry line) and pneumatic testing have identified additional work to be performed in order to attempt to place the line back into service. Until transfer lines have been placed into service, the 242-A Evaporator cannot slurry out concentrated waste to tank farms to allow waste volume reduction. To ensure long-term success of the evaporator, a replacement feed line will also be installed.

12. **Justification**

The primary purpose of the feed and slury lines is to support 242-A evaporator campaigns, specifically to create double-shell tank (DST) space through waste reduction, which supports the overall mission of the River Protection Project to store, treat, and immobilize highly radioactive waste stored in Hanford Site tanks in an environmentally safe, sound, and cost-effective manner.

SECTION II REQUIRED FOR DESIGN TYPE 1 PROJECTS

13. **Project Design Review Required (TFC-ENG-DESIGN-D-17.1)?** ☒ Yes ☐ No ☐ N/A

14. **Major Modification Evaluation Required (Use 1189 Checklist)?** ☐ Yes ☒ No ☐ N/A

15. **Safety In Design Strategy Required?** ☐ Yes ☒ No ☐ N/A

SECTION III PROPOSED SOLUTION

16. **Proposed Solution**

Rev 1 of this MT includes the additional requirements to support the following tasks: Connecting spare conduits into the 242-A Evaporator and the AW-02E pits to support the new feed pump. Adjustable height gear actuators design enhancements. Shoring execution plan. Correction of ACI/AISC code of records years and other misc requirements.

Complete the design within AW Tank Farm and 242-A, and all areas between, in accordance with the design requirements listed in this MT. The design includes:
• Four new permanent underground pipe-in-pipe transfer lines.
• All required pit upgrades at AW-02A, AW-B, and AW-02E (i.e. structural modifications, cover blocks, jumpers, ancillary equipment, etc.).
• All modifications to the 242-A evaporator facility.
• All required electrical and instrumentation upgrades to allow for compliant operation and monitoring.

SECTION IV DESIGN INPUT RECORD

17. **Design Inputs** ☐N/A

Type of Document	Document Number	Rev.	Title
FLOW DIAGRAM AND P&IDs	H-14-020802 SH 004	22	WASTE TRANSFER SYSTEM WT O&M SYSTEM P&ID
FLOW DIAGRAM AND P&IDs	H-14-020802 SH 005	26	WASTE TRANSFER SYSTEM (WT) O&M SYSTEM P&ID
FLOW DIAGRAM AND P&IDs	H-14-020802 SH 006	11	WASTE TRANSFER SYSTEM (WT) O&M SYSTEM P&ID
MECHANICAL	H-14-104240 SH 001	05	JUMPER ARRANGEMENT VALVE PIT 241-AW-A
MECHANICAL	H-14-104242 SH 001	05	JUMPER ARRANGEMENT VALVE PIT 241-AW-B
MECHANICAL	H-2-69337 SH 001	04	PIPING ARRANGEMENT PUMP ROOM & HOT EQUIP. STORAGE PLAN

MODIFICATION TRAVELER

MT No.: MT-50400 **Rev.** 01

17. **Design Inputs** ☐N/A

Type of Document	Document Number	Rev.	Title
MECHANICAL	H-2-69338 SH 001	04	PIPING ARRANGEMENT PUMP ROOM & HOT EQUIP. STORAGE SECTIONS
CIVIL, STRUCTURAL, ARCHITECTURAL	H-2-70398 SH 002	02	PIPING PLAN
CIVIL, STRUCTURAL, ARCHITECTURAL	H-2-70399 SH 001	14	PIPING PLAN 241-AW TANK FARM
CIVIL, STRUCTURAL, ARCHITECTURAL	H-2-70401 SH 001	08	PIPING PLAN VALVE PITS 241-AW-A&B
FLOW DIAGRAM AND P&IDs	H-2-98989 SH 001	28	P&ID SLURRY SYSTEM
MECHANICAL	H-2-99009 SH 001	05	PIPING JUMPER ARRANGEMENT PUMP ROOM
MECHANICAL	H-2-99009 SH 002	00	PIPING JUMPER ARRANGEMENT PUMP ROOM

18. **Other Design Input Requirements:**
See continuation pages.

19. **Other Design Input Considerations:**
See continuation pages.

20. **Preliminary Safety Classification:**
☐SC ☒SS ☐GS ☐N/A

21. **Environmental Risk:**
(TFC-ENG-DESIGN-C-52 Att. D)
☒ Yes ☐ No

22. **Radiological Risk:**
(TFC-ENG-DESIGN-C-52 Att. D)
☒ Yes ☐ No

23. **Hazard Category**
2

24. **Approval Designators**
E, R, EDL-CS, PE, HR, WE, NS, S, EDL-M, EDL-E

SECTION V IMPACTS

25. **Impacted Documents** ☐N/A

Type of Document	Document Number	Rev.	Title

26. **Other Impacts**

SECTION VI DESIGN OUTPUT RECORD

27. **Design Outputs** ☐N/A

Type of Document	Document Number	Rev.	Title

28. **Work Package Numbers:** ☐ N/A

29. **Other Outputs**

SECTION VII DESIGN INPUT AND CLOSURE APPROVALS

30. **Approvals**

Title	Name	Signature	Date
Design Authority Design Input Approval	Engeman, Jason K	*Engeman, Jason K*	02/26/2020
Design Authority Manager	Huntington, Matthew R	*Huntington, Matthew R*	03/19/2020
Design Engineering	Sijgers, Frederik O	*Sijgers, Frederik O*	03/12/2020
Document Control Approval	Scales, Anthony	*Scales, Anthony*	03/19/2020
Environmental Protection	Klages, Deanna L	*Klages, Deanna L*	02/26/2020
Engineering Discipline Lead-Civil/Structural	Langevin, Ann	*Langevin, Ann*	02/27/2020
Engineering Discipline Lead-Electrical	Rambo, Charles L	*Rambo, Charles L*	02/26/2020
Engineering Discipline Lead-Mechanical	Goessmann, Glen E	*Goessmann, Glen E*	03/16/2020
Engineering Hoisting and Rigging SME	McShane, Michael P	*McShane, Michael P*	02/26/2020
Nuclear Safety	Kozlowski, Stephen D	*Kozlowski, Stephen D*	03/16/2020
Originator	Engeman, Jason K	*Engeman, Jason K*	02/26/2020
Process Engineer	Conner, John M	*Conner, John M*	03/13/2020
Radiological Control	Franz, James A	*Franz, James A*	12/02/2019
Industrial Safety	Ladwig, Cevin J	*Ladwig, Cevin J*	11/26/2019
Welding Engineer	Berkey, James	*Berkey, James*	03/16/2020

CODE OF RECORD DOCUMENTS

Table 1-1. Government Documents

Document Number	Title
Code of Federal Regulations (CFR); Washington, D.C.	
10 CFR 830	*Nuclear Safety Management*
10 CFR 835	*Occupational Radiation Protection*
10 CFR 851	*Worker Safety and Health Program*
29 CFR 1910	*Occupational Safety and Health Standards*
40 CFR 264	*Final Status Standards for Owners and Operators of Hazardous Waste Treatment, Storage, and Disposal Facilities*
40 CFR 265	*Interim Status Standards for Owners and Operators of Hazardous Waste Treatment, Storage, and Disposal Facilities*
U.S. Department of Energy (DOE); Washington, D. C.	
DOE O 414.1D	*Quality Assurance*
DOE O 420.1C	*Facility Safety*
DOE/RL-92-36,	*Hanford Site Hoisting and Rigging Manual*
DOE-0344	*Hanford Site Excavating, Trenching and Shoring Procedure (HSETSP)*
DOE-0359	*Hanford Site Electrical Safety Program (HSESP)*
DOE-0360	*Hanford Site Confined Space Procedure (HSCSP)*
DOE-STD-1020 (2016)	*Natural Phenomena Hazards Analysis and Design Criteria for DOE Facilities*
DOE-STD-1189 (2008)	*Integration of Safety into the Design Process*
Washington Administrative Code (WAC); Olympia, Washington	
WAC 296-46B-010	*Electrical Safety Standards, Administration, Inspections, and Installation* – General – Adopted Standards
WAC 173-303-280	*General Requirements for Dangerous Waste Management Facilities*
WAC 173-303-640	*Tank System*

CODE OF RECORD NON-GOVERNMENT DOCUMENTS

Table 1-2. Non-Government Documents (2 Sheets)

Document Number	Title
American Concrete Institute (ACI), Farmington Hills, Michigan	
ACI 301 (2010)	*Specification for Structural Concrete*
ACI 318 (2014)	*Building Code Requirements for Structural Concrete and Commentary*
American Institute of Steel Construction and Commentary (AISC), Chicago, Illinois	
AISC 325 (2011)	*Steel Construction Manual*
AISC 360 (2010)	*Specification for Structural Steel Buildings*
American Society of Civil Engineers (ASCE), Reston, Virginia	
ASCE 7 (2010)	*Minimum Design Loads for Buildings and Other Structures*
American Society of Mechanical Engineers (ASME); New York, New York	
ASME Boiler & Pressure Vessel Code (B&PVC) (2017)	*B&PVC – Rules for Construction of Pressure Vessels*
ASME B31.3 (2016)	*Process Piping*
ASME B30.20 (2018)	*Below-the-Hook Lifting Devices," American Society of Mechanical Engineers*
ASME BTH-1 (2017)	*Design of Below-the-Hook Lifting Devices*
ASME NQA-1 (2008/2009 Addenda)	*Quality Assurance Requirements for Nuclear Facility Applications*.
American Welding Society (AWS); Miami, Florida	
AWS D1.1/D1.1M (2015)	*Structural Welding Code-Steel*
AWS D1.6/D1.6M (2017)	*Structural Welding Code – Stainless Steel*
Instrumentation, Systems, and Automation Society (ISA), Research Triangle Park, North Carolina	
ISA-84.00.01 (2004)	*Functional Safety: Safety Instrumented Systems for the Process Industry Sector*
International Code Council, Washington D.C.	
IBC (2015)	*International Building Code®*[1]
National Association of Corrosion Engineers (NACE); Houston, Texas	
SPO169 (2013)	*Control of External Corrosion on Underground or Submerged Metallic Piping Systems*
National Fire Protection Association (NFPA); Quincy, Massachusetts	
NFPA 101 (2018)	*Life Safety Code®*[2]
Underwriters Laboratories (UL), Inc., Northbrook, Illinois	
UL508A (2013)	*Standard for Industrial Control Panels*

[1] International Building Code® is a registered trademark of the International Code Council of Washington D.C.
[2] Life Safety Code®; registered trademark of the National Fire Protection Association of Quincy. MA.

Table 1-2. Non-Government Documents (2 Sheets)

Other Publications; Washington River Protection Solutions (WRPS), LLC, Richland, Washington	
TFC-ENG-STD-01, Rev. A-7	"Human Factors in Design"
TFC-ENG-STD-02, Rev. A-12	"Environmental/Seasonal Requirements for TFC Systems, Structures, and Components"
TFC-ENG-STD-03, Rev. A-8	"Waste Transfer Confinement Configuration"
TFC-ENG-STD-06, Rev. D-1	"Design Loads for Tank Farm Facilities"
TFC-ENG-STD-08, Rev. B-5	"Post Maintenance Testing"
TFC-ENG-STD-10, Rev. A-16	"Drawing Standard"
TFC-ENG-STD-12, Rev. E-3	"Tank Farm Equipment Identification Numbering and Labeling Standard"
TFC-ENG-STD-13, Rev. G-4	"Ignition Controls for Work Controls in Potentially Flammable Atmospheres"
TFC-ENG-STD-14, Rev. C-3	"Setpoint Standard"
TFC-ENG-STD-15, Rev. C-6	"Standard for Raceway Systems and Flexible Cords& Cables"
TFC-ENG-STD-22, Rev. G-2	"Piping, Jumpers and Valves"
TFC-ENG-STD-26, Rev. C-6	"Waste Transfer, Dilution, and Flushing Requirements"
TFC-ENG-STD-31, Rev. A-4	"Electrical Distribution Studies"
TFC-ENG-STD-34, Rev. A-1	"Standard for the Selection of Non-Metallic Materials in Contact with Tank Waste"
TFC-ENG-STD-39, Rev. A-3	"Civil Survey for Tank Farm Facilities"
TFC-ENG-STD-41, Rev. A-9	"Electrical Installations"
TFC-ENG-STD-42, Rev. A-1	"Tank Farms Waste Transfer System Fitness-for-Service Evaluation"
TFC-ENG-STD-45, Rev. B-2	"Installations for Potentially Flammable Atmospheres",
TFC-ENG-STD-47, Rev. A-1	"Piping Data Specification Standard"
TFC-ENG-STD-51, Rev. A-0	"Vendor Calculation Standard"
TFC-ENG-FACSUP-C-25, REV E-0	"Hoisting, Rigging, Load Handling, and Transport"

NON-GOVERNMENT NON-CODE OF RECORD DOCUMENTS

Table 1-3. Non-Code of Record Documents (3 Sheets)

Document Number	Title
U.S. Department of Energy (DOE); Washington, D. C.	
DOE-0336, Rev. 2A	*Hanford Site Lockout/Tagout Procedure*
DOE-0344, Rev. 4-3	*Hanford Site Excavating, Trenching and Shoring*
Hanford Site, Richland, Washington	
HNF-SD-GN-ER-501, Rev. 3	N*atural Phenomena Hazards, Hanford Site, Washington;*
MSC-POL-EU-60619, Rev. 0	"Electrical Utilities Right of Way"
Tank Farms, Washington River Protection Solutions, LLC, Richland, Washington	
HNF-4160, Rev. 4	*Double-Shell Tank Transfer Valving Subsystem Specification*
HNF-4161, Rev. 6	*Double-Shell Tank Transfer Piping Subsystem Specification*
HNF-5183, Rev. 05N	*Tank Farms Radiological Control Manual (TFRCM)*
HNF-IP-1266	*Tank Farms Operations Administrative Controls*
HNF-SD-WM-HC-017, Rev. 10	*NFPA Flammable Vapor & Gas Hazard Classification for Tank Farms*
RPP-RPT-58290, Rev. 1	*NFPA Flammable Vapor and Gas Hazard Classification for the 242-A Evaporator*
OSD-T-151-00007, Rev. 20	*Tank Farms Waste Transfer Compatibility Program*
OSD-T-151-00010, Rev. 3	*Operating Specifications for Pressure Testing and Leak Detection for Tank Farm Transfer System*
RPP-8360, Rev. 6	*Lifting Attachment and Lifted Item Evaluation, A Hanford Tank Operating Contractor Process*
RPP-13033, Rev. 7K	*Tank Farm Documented Safety Analysis*
HNF-14755, Rev. 6E	*242-A Evaporator Documented Safety Analysis*
HNF-SD-WM-TSR-006, Rev. 8F	*Tank Farms Technical Safety Requirements*
HNF-15279, Rev. 02C	*242-A Evaporator Technical Safety Requirements*
RPP-13909, Rev. 0R	*Transfer Leak Detection Alarm Activation Percent Volume Increase*
RPP-14541, Rev. 8	*Jumper Design, Fabrication, and Testing Specification for Tank Farms*
RPP-25153, Rev, 1	*Volume 3: IQRPE DST System Integrity Assessment – Waste Compatibility*
RPP-CALC-41527, Rev. 1	*Bridge Plate Design for Tank Farms*
RPP-PLAN-34886, Rev. 5	*Investigation and Work Plan for the Resolution of Double-Shell Tank Valve Positioning Problems*
RPP-RPT-41859, Rev. 12	*Safety-Significant Isolation Valves for Double Valve Isolation – Functions and Requirements Evaluation Document*
RPP-RPT-42297, Rev. 19	*Safety-Significant Waste Transfer Primary Piping – Functions and Requirements Evaluation Document*

Table 1-3. Non-Code of Record Documents (3 Sheets)

Document Number	Title
RPP-RPT-52823, Rev. 6	*Tank Farm Waste Transfer Buried Piping Freeze Protection Methodology*
RPP-RPT-58773, Rev. 2	*Assessment of Safety Significant Piping Jumpers to Assure Excess Load Capacity for Potential Water Hammer (Leak Check and Flush) Events* - Supplemental Operation and Design Rules for Water Hammer Evaluation

The use of words “shall,” “must,” “should,” “may,” and “will” within this specification express the following meanings:

- Shall – Denotes a requirement.
- Must – Denotes a requirement.
- Should – Denotes a recommendation. If a “should” recommendation cannot be satisfied, justification of an alternative design shall be submitted to the Project Design Review Team for approval.
- May – Denotes a “permissive” for a stated action, or denotes a possible outcome, depending on the context of the verbiage.
- Will – Denotes a statement of fact.

Waste Transfer System Requirements

1.) Design of the transfer lines shall include one new feed transfer line from the 242-A Evaporator pump room to the AW-02E feed pump pit.

2.) Design of the transfer lines shall include two new slurry transfer lines from the 242-A Evaporator pump room to the AW-02A central pump pit.

3.) Design of the transfer lines shall include one new slurry transfer line from the AW-02A central pump pit to the AW-B valve pit.

4.) The equipment identification numbers (EINs) for the transfer lines should follow the designations identified in Table 1. All nozzle designations are to be new nozzles with no existing tank farm nozzles to be reused:

Table 1 – Transfer Line EINs

Transfer Line (EINs)	From	To
AW02A-WT-WTL-SL-170	242-A, Nozzle 41	AW-02A, Nozzle F
AW02A-WT-WTL-SL-171	242-A, Nozzle 42	AW-02A, Nozzle E
AW02E-WT-WTL-SN-275	AW-02E, Nozzle F	242-A, Nozzle 43
AWVPB-WT-WTL-SL-172	AW-02A, Nozzle W	AW-B, Nozzle R-6

5.) Design of new tank systems or components shall meet the applicable requirements in WAC-173-303-640.

6.) Transfer piping analyses shall be performed in accordance with TFC-ENG-DESIGN-C-60, “Preparation of Piping Analysis for Waste Transfer Systems” and TFC-ENG-STD-22, “Piping, Jumpers, and Valves.”

7.) Waste transfer system design shall minimize inaccessible pockets, crevice, blind holes, socket welds, rough surfaces, or other features and conditions that could trap contamination.

8.) Cover blocks/plates, jumpers, and other components which require the use of a crane for installation shall be provided with lifting attachment points. Design shall be in accordance with DOE/RL-92-36, Hanford Site Hoisting and Rigging Manual and RPP-8360, Lifting Attachment and Lifted Item Evaluation.

9.) Waste transfer system (piping, valves, instruments, etc.) should be welded construction.

10.) The pressure boundary piping that makes up the transfer system route used to support the slurry out transfers shall be a 2-inch Schedule 40 stainless steel. Use of piping of any size and/or material that differs from this requires approval from the WRPS project Design Authority.

11.) The pressure boundary piping that makes up the transfer system route used to primarily support the feed transfers shall be 3-inch Schedule 40 stainless steel. Use of piping of any size and/or material that differs from this requires approval from the WRPS project Design Authority.

12.) Waste transfer system components shall be designed to protect workers from occupational radiation exposures and maintain radiation exposure As Low As Reasonable Achievable (ALARA), including equipment and component disposal, in accordance with the requirements in 10 CFR 835.1001, Occupational Radiation Protection - Design and Control; 10 CFR 835.1002, Occupational Radiation Protection – Facility Design and Modification; HNF-5183, Tank Farms Radiological Control Manual (TFRCM), Table 2-0; and TFC-ESHQ-RP_STD-03, "ALARA Decision Making Methods."

13.) Equipment containing hazardous energy sources (e.g. valves/actuators) shall have locking features to support compliance with 29 CFR 1910.147, Occupational Safety Health Standards – The Control of Hazardous Energy (Lockout/Tagout) and DOE-0336, Hanford Site Lockout/Tagout Program.

14.) Design of tank farms waste transfer system equipment shall utilize the classification of potentially flammable atmospheres as identified HNF-SD-WM-HC-017, NFPA Flammable Vapor and Gas Hazard Classification for the Tank Farms.

15.) Waste transfer lines (primary pressure boundary) shall be classified as a Class 1, Division 1, Group B location. A Design Requirements Compliance Matrix (DRCM) shall demonstrate how the following will be verified:

- Class 1, Division 1, Group B locations shall be identified on a Hazard Area Classification (HAC) plan drawing or on existing drawings in accordance with TFC-ENG-STD-45, Section 3.2.2.
- Equipment suitable for Class I, Division 1, Group B shall be specified in applicable design documents.
- For non-electrical equipment that cannot be specified with ATEX certification, a technical evaluation shall be identified or created to approve equivalent safety of the equipment specified.

16.) Design of 242-A Evaporator waste transfer system equipment shall utilize the classification of potentially flammable atmospheres as identified RPP-RPT-58290, NFPA Flammable Vapor and Gas Hazard Classification for the 242-A Evaporator.

17.) Waste transfer pits shall contain Safety Significant freeze protection (i.e. temperature monitoring and heating) whose design conforms to active systems utilized within the DST WTS unless a technical basis exists which documents why freeze protection is not required.

18.) Waste transfer system component design shall consider winterization requirements. The system shall be designed to sufficiently drain, within the time requirements specified in the DSA so that when the system is shut down there are no low spots that pose a freezing hazard requiring special precautions

19.) New tank systems and addition or modification of existing tank systems shall meet the requirements set forth in 40 CFR 264.192, Standards for Owners and Operators of Hazardous Waste Treatment, Storage, and Disposal Facilities – Design and installation of new tank systems or components and 40 CFR 265.192, Interim Status Standards for

Owners and Operators of Hazardous Waste Treatment, Storage, and Disposal Facilities – Design and installation of new tank systems or components.

20.) The waste transfer piping and jumper shall be designed utilizing the following waste composition properties for the radioactive slurry which will be pumped through the system:

Table 2 – Waste Properties

Waste Property	**Range**
Specific Gravity	1.0-1.6
Viscosity, cP	1-20
Temperature (flushes/transfers)	40ºF – 200ºF
Particle Size (micron)	15-1000
Hardness (MOHS Scale)	3-5
Abrasiveness, Miller Number (ASTM G75-	<100
Solids Loading (vol%)	0-30% by vol
Sodium Hydroxide	0-8.0M
Sodium Aluminate	0-3.0M
Sodium Nitrate (NaNO3)	0-5.0M
Sodium Nitrite (NaNO2)	0-4.43M
Sodium Carbonate	0-2.0M
Sodium Phosphate	0-0.21M
Total Organic Constituents	0-80 gm/L
Cs^{137} Concentration	0.8 Ci/L

21.) Design structural welds in accordance with AWS D1.1 or AWS D1.6 statically loaded criteria for carbon steel or stainless steel, respectively.

22.) The waste transfer system design shall ensure that MSA Electrical Utilities right-of-way boundaries are maintained in accordance with MSC-POL-EU-60619, "Electrical Utilities Right of Way."

23.) Waste transfer system component design shall adhere to the component performance parameter requirements as listed in Table 3 and in accordance with TFC-ENG-STD-06, "Design Loads for Tank Farm Facilities".

Table 3 - Component Performance Parameter Requirements

Item	Safety Function	Safety	Quality	Natural Phenomena Design Category (NDC)	Seismic Design Category	Limit State	Design Code
Buried Piping – Primary	Pressure Containment	SS	QL-2	NDC-2	SDC-2	C	TFC-ENG-STD-22
Buried Piping - Encasement	Pressure Containment	GS	QL-3	NDC-2/1	SDC 2/1	C	TFC-ENG-STD-22
Jumpers	Pressure Containment	SS	QL-2	NDC-2	SDC-2	C	TFC-ENG-STD-22
Cover blocks/ plates	Secondary Containment[3]	GS	QL-3	NDC-2/1	SDC 2/1	C	ACI 318/ AISC 360
Evaporator Walls	Secondary Containment	SS	QL-2	NDC-2	SDC-2	C	ACI 318/ AISC 360
Transfer System Pit Walls	Secondary Containment	GS	QL-3	NDC-2/1	SDC 2/1	C	ACI 318/ AISC 360

[3] These SSCs are designed for higher NDC loads to address system interaction effects (two-over-one phenomena).

242-A Evaporator Waste Transfer System Jumper Design Inputs/Requirements:

1.) The new jumper designs for the 242-A Evaporator shall allow the following operational capability:

- Allow pumping to the new slurry transfer line, SL-170, by connecting pump room Nozzle 5 to the to be installed new slurry transfer line, SL-170, wall nozzle.
- Allow the receipt of supernatant through a new transfer line by connecting pump room Nozzle 13A to the to be installed new supernatant feed nozzle.

2.) The arrangement of the jumper shall be such to allow the tightening and loosening of connector heads remotely via the 242-A Evaporator process crane impact wrench. Exterior dimensions of the impact wrench are available upon request.

3.) The jumper shall conform to the requirements listed in TFC-ENG-STD-22, Piping, Jumpers, and Valves.

4.) Material for the pressure boundary piping that make up the jumpers shall be ASTM A312, Type 304L stainless steel.

5.) The piping analysis for the jumpers shall be prepared in accordance with TFC-ENG-DESIGN-C-60, Preparation of Piping Analyses for Waste Transfer Systems.

6.) RPP-RPT-58773, Assessment of Safety Significant Piping Jumpers to Assure Excess Load Capacity for Potential Water Hammer (Leak Check and Flush) Events shall be used to demonstrate compliance for withstanding pressure transients. Specific design features listed in RPP-RPT-58773 Appendix D shall be incorporated into the jumper design media. A compliance table shall be included in the analysis identifying how each requirement has been met.

7.) The jumpers shall be designed to accommodate the fabrication specification requirements listed in RPP-14541, Jumper Fabrication and Testing Specification for Tank Farms.

8.) Jumpers connected to the replacement slurry waste transfer lines and supernatant feed line are designated as high transfer volume jumpers and their design shall comply with the requirements in TFC-ENG-STD-42, Section 3.2.1.3, “Tank Farms Waste Transfer System Fitness-for-Service Evaluation – Erosion/Corrosion In-Line Monitoring” and TFC-ENG-STD-42, Section 3.3.1.1, “Tank Farms Waste Transfer System Fitness-for-Service Evaluation – Future Erosion/Corrosion Allowance.”

9.) Jumpers shall be designed and fabricated to exclude dead legs.

10.) Nozzle, manifold, and jumper assembly connections installed shall be the Plutonium-Uranium Extraction (PUREX) type designed in accordance with drawings H-2-32420, “Assembly Horiz. & Vert. Conn. 2” Connector,” Sheet 1 – 2 and H-2-32430, “Assembly Horiz. & Vert. Conn. 3” Connector”.

DST Waste Transfer System Jumper Design Inputs/Requirements:

1.) The new safety significant jumper design for the DST waste transfer system (AW-02A, AW-B, and AW-02E pits) shall allow the following operational capabilities.

AW-02A Central Pump Pit:

- Allow the routing of waste transfers between the following transfer lines: New transfer line SL-170 to new transfer line SL-172 via jumpers in AW-02A. Jumper shall include a low point drain valve in AW-02A to drain into the headspace of AW-102.
- Allow the routing of waste transfer between the following transfer lines: SN-609, SN-610, SN-267, SN-268, and SN-272 via jumpers in AW-02A with DVI to isolate each route.
- Allow the receipt of waste into the AW-102 headspace via a drop leg from waste being transferred from SN-609, SN-610, SN-267, SN-268, or SN-272.
- Valve placement shall be such that transfers from SN-272 can enter the headspace of AW-102 via a drop leg in AW-02A while being physically disconnected via DVI from transfers occurring through AW-02A via SN-609, SN-610, SN-267, and SN-268.
- Jumper elevation/hydraulics shall be such that transfers into AW-02A via SN-609, SN-610, SN-267, SN-268, or SN-272 are free draining back to the originating waste transfer pit (e.g. AP valve pit, AW-B valve pit, AW-A valve pit, etc.).
- Design process jumpers to allow installation of encasement process blanks for use during encasement pressure tests.

AW-B Valve Pit:

- Allow the routing of waste transfers between the following transfer lines: SN-268, SL-509, SL-166, SN-264, SN-266, and the new transfer line SL-172 with DVI to isolate each route.
- Jumper elevation/hydraulics shall be such that transfers into AW-B via SN-268, SL-509, SL-166, SN-264, SN-266, and the new transfer line SL-172 are free draining back to the originating waste transfer pit (e.g. AP valve pit, AW-02A pump pit, etc.).
- Isolate existing failed transfer lines SL-167 and SL-164 from the waste transfer system within AW-B.

AW-02E Feed Pump Pit:

- Allow the routing of waste transfers between the following transfer lines/components: new transfer line SN-275, SN-272, and the waste transfer pump installed in the AW-02E 12-inch riser.
- Jumper elevation/hydraulics shall be such that transfers associated with SN-275, SN-272, and the AW-02E feed pump free drain back into AW-102 via the pump column.

2.) Waste transfer jumpers should be designed to allow the installation of blanks to support periodic pneumatic encasement pressure tests at the DST waste transfer line low point encasement drain PUREX nozzles. Blanks shall be installed using a remote impact wrench without the removal of waste transfer system jumpers. If this is not practical, design encasement drain valve jumpers to allow waste transfer system jumpers to remain in place during encasement pressure tests.

3.) The arrangement of the jumpers shall be such to allow the tightening and loosening of connector heads remotely via an electric impact wrench (Part #C-HEFIG-002). Exterior dimensions of the impact wrench are available upon request.

4.) Material for the pressure boundary piping that make up the jumpers shall be ASTM A312, Type 304L stainless steel.

5.) The available valve make/model numbers and flow patterns available for use to support this jumper design may be provided to the Subcontractor upon request. Selection of different valve and/or flow pattern shall require justification by the Subcontractor with concurrence by WRPS engineering prior to proceeding with the design due to the procurement duration required to obtain additional valves.

6.) The new valves shall utilize valve funnels identified on H-14-107471, Valve Funnel Receiver Assemblies, to allow engagement between the valve stem and the gear actuator drive shaft.

7.) Valves which are to be used for DVI valve criteria shall utilize valve body indicator plates identified on H-14-107606, “Valve Indictor Plate Details” to allow remote valve positioning and in-service inspections.

8.) The jumper shall conform to the requirements listed in TFC-ENG-STD-22, Piping, Jumpers, and Valves.

9.) The piping analysis for the jumpers shall be prepared in accordance with TFC-ENG-DESIGN-C-60, Preparation of Piping Analyses for Waste Transfer Systems.

10.) RPP-RPT-58773, Assessment of Safety Significant Piping Jumpers to Assure Excess Load Capacity for Potential Water Hammer (Leak Check and Flush) Events shall be used to demonstrate compliance for withstanding pressure transients. Specific design features listed in RPP-RPT-58773 Appendix D shall be incorporated into the jumper design media. A compliance table shall be included in the analysis identifying how each requirement has been met.

11.) The jumpers shall be designed to accommodate the fabrication specification requirements listed in RPP-14541, Jumper Fabrication and Testing Specification for Tank Farms.

12.) Jumpers connected to the replacement slurry waste transfer line are designated as high transfer volume jumpers and their design shall comply with the requirements in TFC-ENG-STD-42, Section 3.2.1.3, “Tank Farms Waste Transfer System Fitness-for-Service Evaluation – Erosion/Corrosion In-Line Monitoring” and TFC-ENG-STD-42, Section 3.3.1.1, “Tank Farms Waste Transfer System Fitness-for-Service Evaluation – Future Erosion/Corrosion Allowance.”

13.) Jumpers shall be designed and fabricated to exclude dead legs.

14.) Nozzle, manifold, and jumper assembly connections installed shall be the Plutonium-Uranium Extraction (PUREX) type designed in accordance with drawings H-2-32420, "Assembly Horiz. &Vert. Conn. 2" Connector," Sheet 1 – 2 and H-2-32430, "Assembly Horiz. & Vert. Conn. 3" Connector".

15.) Jumper support legs that contact with the flooring or walls as part of installation and/or operation shall use materials at the contact surface that minimize risk of damage to floor and wall protective coatings.

16.) Manual valves in safety-significant jumpers shall meet the Double Valve Isolation (DVI) criteria in TFC-ENG-STD-22, "Piping, Jumpers, and Valves."

Air lift Circulator (ALC) Jumper Design Inputs/Requirements:

1.) New General Service jumpers designed for the ALC system shall allow the following operational capabilities.

- Allow the routing of air from Nozzle P to R and Nozzle S to T

2.) The arrangement of the jumpers shall be such to allow the tightening and loosening of connector heads remotely via an electric impact wrench (Part #C-HEFIG-002). Exterior dimensions of the impact wrench are available upon request.

3.) Material for the pressure boundary piping that make up the jumpers shall be ASTM A312, Type 304L stainless steel.

4.) The jumper shall conform to the requirements listed in TFC-ENG-STD-22, Piping, Jumpers, and Valves where possible as a best practice. This jumper is not a waste transfer jumper is it supports the process air system to connect to the airlift circulator. B31.3 load cases shall be used to include dead weight, thermal, and occasional loads. Inputs to the analysis shall be utilized from TFC-ENG-DESIGN-C-60 where practical to aid in the analysis.

5.) The jumper shall have a design pressure of 125 psig at a design temperature of 100 deg F per the M-7 pipe code specification of Project B-120-C7.

6.) The jumpers shall be designed to accommodate the fabrication specification requirements listed in RPP-14541, Jumper Fabrication and Testing Specification for Tank Farms.

7.) Jumpers shall be designed and fabricated to exclude dead legs.

8.) Nozzle, manifold, and jumper assembly connections installed shall be the Plutonium-Uranium Extraction (PUREX) type designed in accordance with drawings H-2-32410, "Assembly Horiz. &Vert. Conn. 1" Connector,"

9.) Jumper support legs that contact with the flooring or walls as part of installation and/or operation shall use materials at the contact surface that minimize risk of damage to floor and wall protective coatings.

AW-02A Encasement Flanged Spool Design Inputs/Requirements:

1.) Two new General Service encasement drain valve spools shall have a design pressure of 60 psig at a design temperature of 200 deg F.

2.) The encasement drain valves shall interface with the existing 1-1/2 inch encasement flanged end for SN-267 and SN-268 located in the AW-02A central pump pit.

3.) Installation configuration shall be in accordance with H-2-70411 Sht 2 Detail 3, with the exception that the valve shall be stainless steel and the valve funnel shall utilize valve funnels identified on H-14-107471, Valve Funnel Receiver Assemblies, to allow engagement between the valve stem and the gear actuator drive shaft.

4.) The encasement spools shall be designed to accommodate the fabrication specification requirements listed in RPP-14541, Jumper Fabrication and Testing Specification for Tank Farms, as practical.

DST Waste Transfer Pit Cover Block Design Inputs/Requirements:

1.) New cover blocks/plates shall be designed as required to support new jumper arrangements where utilizing the existing cover blocks is not practical. It is anticipated that existing equipment which was previously installed through the cover block will require replacement due to changes in cover block design (i.e. new equipment lengths) to meet current requirements. The cover blocks shall be designed with penetrations to allow installation and operation of the following equipment:

- One Leak Detection Assembly (Reference H-14-100981). To be located adjacent to the drain seal assembly port.
- One Pit Thermocouple Tree (Reference H-14-109814).
- One Pit Drain Seal Assembly (Reference H-14-107249). To be located in the same location as the existing drain seal assembly.
- Valve Gear Actuator(s) Assembly (Reference H-14-110327). To align above each jumper valve centerline.
- Multiple Remote Cameras (Viewport penetrations with minimum inside diameter of 4 inches). Sufficient view ports shall be selected to ensure remote cameras have line of sight to all installed equipment including valves, Purex connectors, leak detector probes, drain, etc.
- One In-Pit Heater (Reference H-14-110254)
- A minimum of one spare gear actuator assembly mating flanges (to support future jumper replacement activities).

2.) Penetrations which will not have equipment installed as part of normal operation (viewport penetrations, spare gear actuator assembly, etc.) will require shield port covers to be listed as details on the applicable cover block design media.

3.) Shield port covers shall utilize gaskets and a drip ledge to prevent water and foreign material intrusion into the applicable pit.

4.) New cover blocks shall be sloped and extend over the outside of the pit walls to allow water to drain off the top of the cover and away from the pit. If utilizing steel plate for the top surface, water intrusion mitigation features (e.g. drip ledges, raised surface, etc.) may be implemented instead of slope as an acceptable means. Minimizing intrusions shall be a consideration to limit shutdowns due to artificial leak detector alarms.

5.) Cover block/plate penetrations shall be sealed adequately to stop rain/snow water intrusion.

6.) Cover blocks/plate configuration shall minimize radiation streaming.

7.) Cover blocks/plate shall be provided with lifting bails positioned to be suitable for balanced lifting by crane.

8.) Cover blocks/plate and process pits shall have a special protective coating to prevent waste absorption from a spray leak.

9.) New cover blocks/plates shall be designed in accordance with TFC-ENG-STD-06, “Design Loads for Tank Farm Facilities” with the natural phenomena design category of NDC-2. The cover blocks are NDC-2/1 (2 over 1), which means their failure could affect NDC-2 equipment (piping inside the pump pits) and they are subjected to the same seismic loads as NDC-2 equipment. Utilize Limit State C for analysis.

10.) Cover block/plate design shall be in accordance with DOE/RL-92-36, Hanford Site Hoisting and Rigging Manual and RPP-8360, Lifting Attachment and Lifted Item Evaluation.

DST Waste Transfer Lines Design Inputs/Requirements:

1.) Locations for the new transfer line nozzle connections into the DST waste transfer system shall occur within AW-Farm. Pit tie-in locations are AW-02A, AW-02E, and AW-B valve pits.

2.) 242-A Evaporator wall nozzles are to be designed for remote installation from the inside of the pump room via the process crane. Support personnel will be located on the outside of the pump room wall to facilitate the final placement/anchorage.

3.) Transfer piping design shall comply with the requirements in TFC-ENG-STD-22, "Piping, Jumpers, and Valves."

4.) New slurry transfer piping shall be comprised of a 2 inch Schedule 40 stainless steel primary pipe and a 4 inch Schedule 40 carbon steel secondary encasement pipe.

5.) New supernatant transfer piping shall be comprised of a 3 inch Schedule 40 stainless steel primary pipe and a 6 inch Schedule 40 carbon steel encasement pipe.

6.) Material for the primary piping within the transfer line shall be seamless grade 316L stainless steel.

7.) Material for the encasement piping of the transfer line shall be seamless carbon steel ASTM A106 or ASTM A53.

8.) The encasement pipe shall extend through the concrete wall of the applicable structure (i.e. pit walls, pump room wall, etc.) to maintain secondary containment.

9.) Waste transfer piping design (primary confinement piping and secondary containment piping) shall have the capability to be pressure tested in accordance with the requirements of ASME B31.3, *Process piping* for normal fluid service.

10.) Underground transfer piping shall be covered by the equivalent of ≥ 3 foot (ft.) of soil to the top of the pipe [RPP-13033, *Tank Farms Documented Safety Analysis*, Section 2.4.2.1 "Transfer Lines"]. The definition of "equivalent" is outlined in RPP-RPT-52823, *Tank Farm Waste Transfer Buried Piping Freeze Protection Methodology*; this design shall comply with the requirements outlined therein.

11.) Underground transfer piping located outside of an RBA shall be covered with appropriate backfill/shielding to ensure that the contact dose rate during a transfer (simultaneous feed and slurry transfers) does not exceed 0.5 mr/hr as measured at grade utilizing the source term cited in Table 1.

12.) Buried piping must be provided with a backfill material that is noncorrosive, porous, and homogeneous substance that is carefully installed so that the backfill is placed completely around the piping and compacted to ensure that the piping is fully and uniformly supported. Controlled density fill (CDF) will be used under and up to at least the horizontal centerline of transfer pipe system.

13.) Buried pipe bends with a minimum of five pipe diameters are preferred to butt-welding elbow and shall be used where possible

14.) The transfer line encasements shall have connection points (i.e., test risers) at or near grade to allow the performance of encasement pneumatic pressure testing and encasement flushing near each low point and high point.

15.) The transfer line encasement connection point shall be configured to aid in the installation of a boroscope into the transfer line encasement (minimum inner diameter of ½-inch test riser required with angled approach into the encasement).

16.) Design of new pipe system to connect to existing piping shall be compatible with the material of construction, nominal pipe size and pipe schedule with interfacing existing piping

17.) New transfer piping shall be designed with a corrosion protection system that complies with the NACE SP0169, which shall include a fusion bonded epoxy layer and cathodic protection.

18.) Waste transfer lines shall be sloped continuously from high point to low point with a minimum slope of 0.5%. If shown that 0.5% is not practical, then the pipe slope shall utilize no less than the absolute minimum of slope of 0.25 %.

19.) Low point encasement drains into the applicable pit shall utilize the pit leak detector as the low point leak detection.

20.) The transfer line encasement low point at the applicable pit structure shall be designed with a 2-inch PUREX nozzle to support periodic pneumatic encasement pressure tests. These 2-inch nozzles should be accessible for the installation of a process blank and isolation blank without the removal of process jumpers. If this is not practical, design encasement drain valve jumpers to allow process jumpers to remain in place during encasement pressure tests.

21.) The transfer lines and associated jumpers shall be designed to the following design pressure/design temperature parameters:

Table 4 – Pressure and Temperature Design Requirements

	Primary Piping		**Encasement Piping**	
Transfer Line Type	Design Pressure	Design Temperature	Design Pressure	Design Temperature
Supernatant	620 psig	200ºF	60 psig	200ºF
Slurry	620 psig	200ºF	60 psig	200ºF

Table 5 – Jumper Pressure and Temperature Design Requirements

Jumper Piping	
Design Pressure	Design Temperature
400 psig	200ºF

Waste Transfer System Material Design Inputs/Requirements:

1.) Equipment, components, and assemblies that may contact waste or waste treatment materials shall be compatible with their physical, chemical, and radioactive properties.

2.) Waste transfer component selection shall use the guidance in TFC-ENG-STD-34, "Standard for the Selection of Non-Metallic Materials in Contact with Tank Waste," for selection of Non-Metallic materials. Material selection is to be based on normal, bounding conditions for DSTs, with the exception of Tank 241-AZ-101. Tank 241-AZ-101 waste characteristics are not part of the normal bounding conditions and shall not be used in the selection of non-metallic materials.

3.) Metallic surfaces which will routinely contact tank waste shall be fabricated from stainless steel.

4.) Materials of construction shall be selected to minimize all forms of corrosion.

5.) Waste transfer system components shall be designed for the 250 Rad/hour radiation environment for direct contact with tank waste utilizing the source term methodology defined in TFC-ENG-STD-34, "Standard for the Selection of Non-Metallic Materials in Contact with Tank Waste", Attachment D, "Derivation of Radiation Source Term" for a non-AZ Tank Farm tank.

6.) Non-metallic materials shall conform to the requirements of TFC-ENG-STD-34, "Standard for the Selection of Non-Metallic Materials in Contact with Tank Waste.

System Design Life Design Inputs/Requirements:

1.) Pit cover blocks/plates shall have a design life of 35 years.

2.) Removable components beneath cover blocks/plates, including valves and jumpers, should have a design life of 25 years without maintenance, where practical.

3.) Buried waste transfer line piping shall have a design life of 50 years.

Electrical Requirements Design Inputs/Requirements:

1.) Electrical systems shall be designed in compliance with the requirements of the NFPA 70, National Electrical Code®, NFPA 101, Life Safety Code® and TFC-ENG-STD-41, "Electrical Installations."

2.) Electrical installations in potentially flammable atmospheres shall meet the requirements of TFC-ENG-STD-45, "Installations for Potentially Flammable Atmospheres."

3.) Outdoor electrical equipment enclosures shall be rated for protection from windblown dust, per NEMA ICS 6, Industrial Control and Systems: Enclosures.

Hand-hole and Buried Conduit Design Input/Requirements:

1.) Hand-holes shall be sized to allow for the installation of a minimum of three 3 inch PVC conduits (for both electrical distribution and instrumentation).

2.) Buried conduit shall be Ocal style PVC-coated rigid conduit and fittings.

3.) Hand-holes shall be selected and load rated for the applicable traffic conditions based upon their location. It is anticipated that all hand-holes shall be rated for higher than light duty (pedestrian traffic only).

4.) Electrical distribution hand-holes shall be separate from instrumentation hand-holes.

5.) Hand-hole locations shall allow for ease of future upgrades to tie into new conduit runs. This includes structures such as the 271-AW building, new electrical distribution building (location to be provided by WRPS Engineering), AW-102 pit structures, nearby hand-holes, and conduit runs on the north side of the 242-A Evaporator to enter the building.

6.) All hand-holes and conduit shall comply to the requirements is TFC-ENG-STD-15 and TFC-ENG-STD-41.

7.) Conduit shall be run to two new terminal boxes to be installed on the south side of the evaporator to allow routing of electrical and instrumentation from the evaporator to the new conduit hand holes.

8.) Core drilling near the southeast corner of the Evaporator into the AMU room shall be performed to allow passage of conduit. Spare cores and pass thru' s shall be in place for future expansion.

9.) Conduit shall be routed along the south face of the evaporator wall to the southeast corner region joining the new TBX to the pass-thru's into the AMU room.

10.) Conduit shall be continued to be routed into the AMU room in the evaporator to join into MCC-001.

11.) Conduit shall be run from the new hand-holes to the AW-02E feed pump pit to allow conductors to tie into the P-102-1 TBX located on the south side of the AW-02E pit.

Evaporator Feed Pump Electrical Design Input/Requirements:

1.) New conductors shall routed from the P-102-1 TBX located by the AW-02E pit to the MCC-001 located in the 242-A Evaporator AMU room to allow the operation of the AW-02E feed pump.

2.) Conductors shall be sized for a minimum of a 20HP motor. Larger conductors are preferred for future pump replacements which may require additional HP requirements.

3.) Existing overload protection and motor contactor shall be replaced in the motor starter compartment if not appropriately sized for the new replacement feed pump.

Hoisting and Rigging Design Inputs/Requirements:

1.) All hoisting and rigging equipment shall comply with the requirements of DOE/RL 92-36, *Hanford Site Hoisting and Rigging Manual*; TFC-ENG-FACSUP-C-25, "Hoisting and Rigging;" RPP-8360, *Lifting Attachment and Lifted Item Evaluation.*

2.) The lifting attachment(s) on the equipment (lifting eyes, lugs, ears, etc.) and the lifted items shall be designed in accordance with site procedures, an exception is that ASME BTH-1, *Design of Below-the-Hook Lifting Devices* should be used to verify lifting lugs hole diameter compared to the shackle pin diameter (the D to d ratio). The design shall consider equipment orientation, i.e., horizontal to vertical.

3.) Lift points for packages and individual components shall be clearly identified.

4.) Design Agent provided structural and mechanical lifting devices, as defined by ASME B30.20, *Below-the-Hook Lifting Devices* and shall conform to the requirements of ASME B30.20.

5.) The design of below-the-hook lifting (BTH) devices shall conform to the requirements of ASME BTH-1*, Design of Below-the-Hook Lifting Devices.*

6.) The Design Agent shall submit calculations required for the design of all BTH devices and associated lifting points. BTH devices shall be load tested to 125% of the rated capacity +0%/-5%.

7.) All lifting devices shall be rated for outdoor service. Lifting devices shall be designed to a minimum temperature of 10 °F.

Actuator Design Enhancements Inputs/Requirements:

1.) The actuator design change shall allow for setting the overall length in the field prior to installation without the requiring welding.
2.) Features shall be included to allow approximately 8-inches of travel adjustment. This distance is based on the uncertainty of where the as-built location of the applicable valve funnel is in elevation.
3.) The preferred design solution involves two hubs that are drawn together using socket head cap screws which squeezes four locking shims onto the face of the driveshaft travel bar. This compression and mating surfaces prevents any torsional deflection/slop to occur.
4.) The design should include a feature to where in the event the compression of the shims fail, the driveshaft travel bar does not fall out of the actuator drive shaft assembly. For example this could be accomplished by two button head screws put in place prior to welding the upper locking hub to the actuator driveshaft piping.
5.) The torsional load this joint needs to withstand are the same as the remaining driveshaft assembly as documented in RPP-CALC-60314, *Manual Valve Gear Operator Supporting Analysis* of 750 ft-lbs.

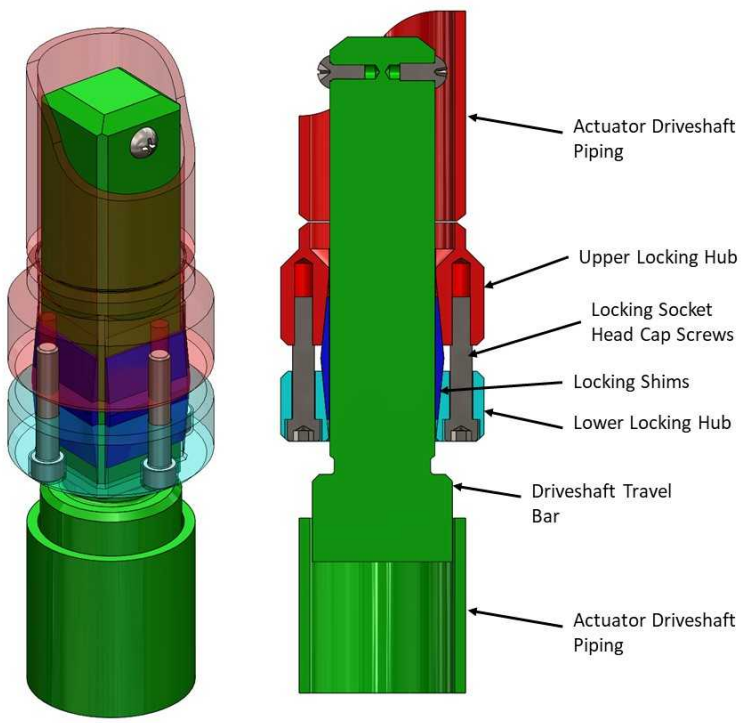

Driveshaft Enhancement Concept

Shoring Plan Design Inputs/Requirements

1.) The shoring system and methods of deployment will comply with the requirements of DOE-0344, Hanford Site Excavating, Trenching and Shoring Procedure (HSETSP).

2.) The shoring system will be required to be compatible with Type C-60 soil.

3.) The shoring system will be required to be in place for 3-6 months at a time.

4.) Excavations will be performed via hand digging (i.e. shovels). The shoring system installation shall be compatible with this type of excavation.

5.) Fall protection will need to be a feature that is that included with the shoring system.

6.) Trench ingress and egress shall be included with the shoring system

7.) The shoring system needs to allow long sections of piping (40-50ft) to be placed in the trench via a crane without cross supports preventing installation.

8.) The shoring system needs to allow 90 degree turns of the excavated trench.

9.) The shoring system needs to account for surcharge loads from nearby facilities.

10.) The shoring system needs to allow for existing infrastructure in unknown locations to cross the excavation.

Interface Points:

1.) The new slurry jumper to be designed/installed in the 242-A Evaporator shall connect to Nozzle 5 which is located on an existing jumper 4 to 5 / 40 to 21 (Reference H-2-836350) in the pump room.

2.) The new supernatant jumper to be designed/installed in the 242-A Evaporator shall connect to Nozzle 13A which is located on the existing jumper D to 13A (Reference H-14-107263) in the pump room.

3.) The new jumpers to be designed/installed in the AW-B Valve Pit shall connect to Nozzle R4 to allow transfer to the AP Valve Pit via SL-509.

RPP-CALC-63208
Revision 1

Structural Analysis for the 242-A Pump Room Wall Nozzle Assemblies Plus Counterweight Lifting Devices

Prepared by

JD Yunker
Columbia Energy and Environmental Services, Inc. for
Washington River Protection Solutions, LLC

Date Published
April 2020

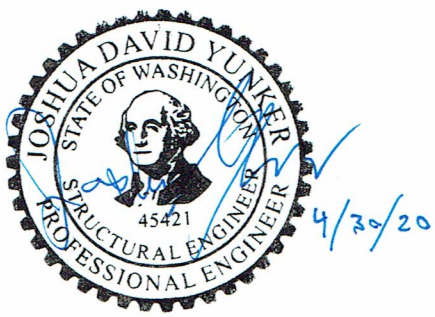

Prepared for the U.S. Department of Energy
Office of River Protection

Contract No. DE-AC27-08RV14800

Columbia Energy AND ENVIRONMENTAL SERVICES

Design Verification Checklist

Doc. Number	Rev.	Title
RPP-CALC-63208	1	Structural Analysis for the 242-A Pump Room Wall Nozzle Assemblies Plus Counterweight Devices

Verification Method (Check One)

☒ Review ☐ Alternate Calculation ☐ Qualification Testing

Verification Results

Yes	No	NA	
☒	☐	☐	Design inputs correctly selected and cited and correctly incorporated.
☒	☐	☐	Input data were checked for consistency with original source information.
☐	☐	☒	Design inputs for interfacing organizations are specified
☐	☐	☒	Necessary assumptions are explicit, adequately described and supported.
☐	☐	☒	Unverified assumptions (requiring verification) are clearly identified.
☒	☐	☐	Analytical and technical approaches and results are reasonable and appropriate.
☒	☐	☐	The version or revision of each reference is cited
☒	☐	☐	Design output is reasonable for design inputs
☒	☐	☐	Results and conclusions address all points in the purpose.
☒	☐	☐	Conclusions are consistent with analytical results and applicable limits.
☐	☐	☒	Suitable materials, parts, processes, and inspection and testing criteria specified
☒	☐	☐	All comments have been adequately addressed and dispositioned
☒	☐	☐	Calculations are sufficiently detailed such that a technically qualified person could reproduce the calc.
☒	☐	☐	Design method(s) are appropriately used and documented.
☒	☐	☐	Computer Program(s) are appropriately used and results support design.
☒	☐	☐	For pre-verified computer programs the V&V document is referenced and specific computer used for the calculation is identified

Ensure calculations that use software include a paper printout, microfiche, CD-ROM, or other electronic file of the input data and identification to the computer, computer codes, and versions used, or provide alternate documentation to uniquely and clearly identify the exact coding and execution process.

Checker Name	Signature	Date
Ryan Lang		4/30/2020

Columbia Energy
AND ENVIRONMENTAL SERVICES

Project Title:	242-A Evaporator Slurry Line Replacement	**Project No.:**	WRPS 67247 Release 5
		Calculation No.:	RPP-CALC-63208
Calculation Title:	Structural Analysis for the 242-A Pump Room Wall Nozzle Assemblies plus Counterweight Lifting Devices		

Revision	**0**		**1**		**2**	
Originator	On File	12/4/2019		4/30/20		
	Joshua Yunker	Date	Joshua Yunker	Date	Name	Date
Checker	On File	12/4/2019		4/30/20		
	Ryan Lang	Date	Ryan Lang	Date	Name	Date
Project Manager	On File	12/4/2019		4/30/20		
	Ralph Dunham	Date	Ralph Dunham	Date	Name	Date

Attachments

Attachment No.	Title	No. of Pages
1	RISA-3D Pump Room Wall Model	19
2	RISA-3D Nozzle Assembly and Anchorage	218

Affected Documents

Document No.	Document Title	Revision No.
	N/A	

Revision	Description of Revision
0	Initial release.
1	Revisions due to design evolution

1806 Terminal Drive
Richland, Washington 99354
www.columbia-energy.com
Phone: 509.946.7111
Fax: 509.946.9363

1.0 INTRODUCTION/BACKGROUND

Slurry Line (SL) 167 failed a recent pressure test. SL-168 also is in need of repair. Part of the slurry line replacement will require wall penetrations to be bored through the west wall of the 242A evaporator building and new nozzles for three replacement lines installed. Temporary lifting devices will be required to install the nozzles within the pump room.

Additionally, four 2" cores will be required through the south wall of the building, at Grids 1 and C, for routing of new electrical conduit.

2.0 OBJECTIVE/PURPOSE

The objective of this calculation is to qualify the existing west wall of the evaporator building at the pump room for the new wall penetrations, and to qualify new nozzle anchors at the side of the existing pump room wall. The lifting devices will also be qualified.

The location of the four new electrical conduit cores will be reviewed against the drawings to determine the requirements for qualifying the existing wall for the new cores.

3.0 ASSUMPTIONS

None

4.0 DESIGN INPUTS

1. Concrete 28 day compressive strength at pump room wall is 3,000psi per general notes, H-2-69277.
2. Concrete reinforcing strength at pump room wall is 60,000psi per general notes, H-2-69277.
3. Wall vertical reinforcing is #5 @ 12" on center per detail 7, sheet 1, H-2-69278.
4. Outside face horizontal reinforcing is #7 @ 9" on center per detail 7, sheet 1, H-2-69278.
5. Inside face horizontal reinforcing is #5 @ 18" on center per detail 7, sheet 1, H-2-69278.
6. The Evaporator walls are NDC-2/SDC-2 and Limit State C per MT-50400 Table 3.
7. Structural requirements in accordance with TFC-ENG-STD-06 Rev. D-1.
8. Nozzle envelope loading from transfer lines are are listed in Section 10.4.1
9. Nozzle Loading from jumpers inside pump room are listed in Section 10.4.1. (reference Tables I1-5 and I1-6 of Appendix I, RPP-CALC-63213).

5.0 METHOD OF ANALYSIS

Pump Room Wall

Per MT-50400, the evaporator wall is Safety Significant and Hazard Category 2. Using the "Component Performance Parameter Requirements" in Table 3 of MT-50400, NDC = 2, and the Limit State is C. Per Table 5 of TFC-ENG-STD-06, acceptable code of design is ASCE 7-10. Additionally footnote 1 of Table 5 references the use of IBC 2015. The concrete code referenced in IBC 2015 is ACI 318-14. This code will be used to qualify the evaporater walls. The walls will be cracked in the RISA model to 35% of their gross cross sectional stiffness properties in accordance with Table 6.6.3.1.1(a) of ACI 318-14. Total area of horizontal steel is 1.0 square inches per vertical foot for both curtains per design inputs. Walls are checked with #5 @ 12" horizontally each face, a total of 0.62 square inches per vertical foot, this is conservative.

The new penetrations will be placed in close proximity to one another. Because of the close spacing of the penetrations the wall will effectively behave as if a single blockout was made. Accordingly, the zone in which the penetrations occur will be modeled as a single square blockout. This method of analysis will ensure the wall has adequate strength to span over and around the weakened zone at the core locations.

The existing nozzle penetrations going through the Grid A wall in the vicinity of the pump room are shown on drawing H-2-99009. Nozzle numbers are 12-20, and 34-35. These penetrations consist of 2" and 3" cast in place pipes. Because of their relatively small size, the fact that they are cast in with no cut vertical reinforcing, and the low resultant stresses in the wall due to wall out of plane loading, it is acceptable to disregard them in the following calculations.

The wall panel will be modeled from approximately Grid 1.5 to the wall at Grid 2. The vertical extent is from the basement level to the top of low roof. The cross walls will be modeled as boundary conditions. Applicable NPH loading based on TFC-ENG-STD-06 will be used to qualify the wall.

Design load combinations are as follow:

- LC1 = IBC 16-1: 1.4DL
- LC2 = IBC 16-2: 1.2DL + 1.6H + 0.5RLL
- LC3 = IBC 16-3: 1.2DL + 1.6RLL + 1.6H + 0.5WL
- LC4 = IBC 16-4: 1.2DL + 1.0WL + 1.6H + 0.5RLL
- LC5 = IBC 16-5: 1.2DL + 1.0ELY + 1.0EL + 1.6H + 0.2SL
- LC6 = IBC 16-6: 0.9DL + 1.0WL + 1.6H
- LC7 = IBC 16-7: 0.9DL - 1.0ELY + 1.0EL + 1.6H

South Wall Conduit Penetrations

Four (4) new 2" diameter cores will be required at the south wall of the evaporator building. Due to the small size of the cores, and the fact that no rebar will be cut, the existing 12" concrete wall with a double mat of reinforcing will not see more than a negligible decrease in stiffness and strength in this location. Because of this, no additional analysis is required for these cores.

Nozzle Anchorage Assembly

Nozzle loading is applied to the RISA model. The nozzle assembly is modeled using frame elements and shell elements. Joint reactions representing anchor forces are then determined. Compression only spring boundary conditions are used at the square anchor plate to represent the plate contacting the face of the existing concrete wall. Pinned boundary conditions are used to represent the four expansion anchors at the corners. The presence of grout within the core is neglected, and compression only links are used to represent the guide plates welded to the secondary containment pipe providing restraint against movement against the sides of the core opening. No boundary conditions are applied at the back circular plate: there will be a 1/2" EPDM gasket between the plate and the wall, preventing structural engagement of the plate against the existing wall. While the B03 restraint reactions are used as a minimum design criteria, the anchors and nozzle assembly will be analyzed for higher forces, which will be larger than the B03 reactions. As such, the design forces used in the anchorage and nozzle assembly calculations will provide a capacity envelope to compare against potentially changing transfer line reactions.

The design forces used to qualify the nozzles are identical between the 2" and 3" nozzles. Accordingly, the 2" nozzle will be qualified in this calculation, which will envelope the design of the 3" nozzle since the 3" nozzle is comprised of a larger central pipe core, and is therefore stronger than the 2" nozzle assembly.

Design load combinations are as follow:

- LC1 = 1.2DL + 1.2Thermal + 1.2GT1P1
- LC2 = 1.2DL + 1.4GE5

GT1P1 and GE5 are taken from the ASME B31.3 analysis, RPP-CALC-63213.

5.1 Use of Computer Software

RISA 3D® Version 16.0.5, structural analysis software package suitable for analyzing static structures was used. The software is verified and validated in accordance with ASME NQA-1, Subpart 2.7, Paragraph 302, on computer CE-IT-10131, documented in CE-SVVR-18-001. Computer CE-IT-10131 is a PC with Intel Xeon 4 core processor with Windows 10 Professional, 64-bit operating system.

MathCAD® version 15 computer software is used to document and organize this calculation. All MathCAD computations are checked with a handheld calculator. Microsoft® Excel® is used to tabulate RISA 3D results. Formulas and sample calculations used in Excel tables are shown where used.

ANSYS® version 19.1 was used to calculate CG values and weights for the wall nozzle assemblies. The software is verified and validated on computer CE-IT-10131, documented in CE-SVVR-19-001.

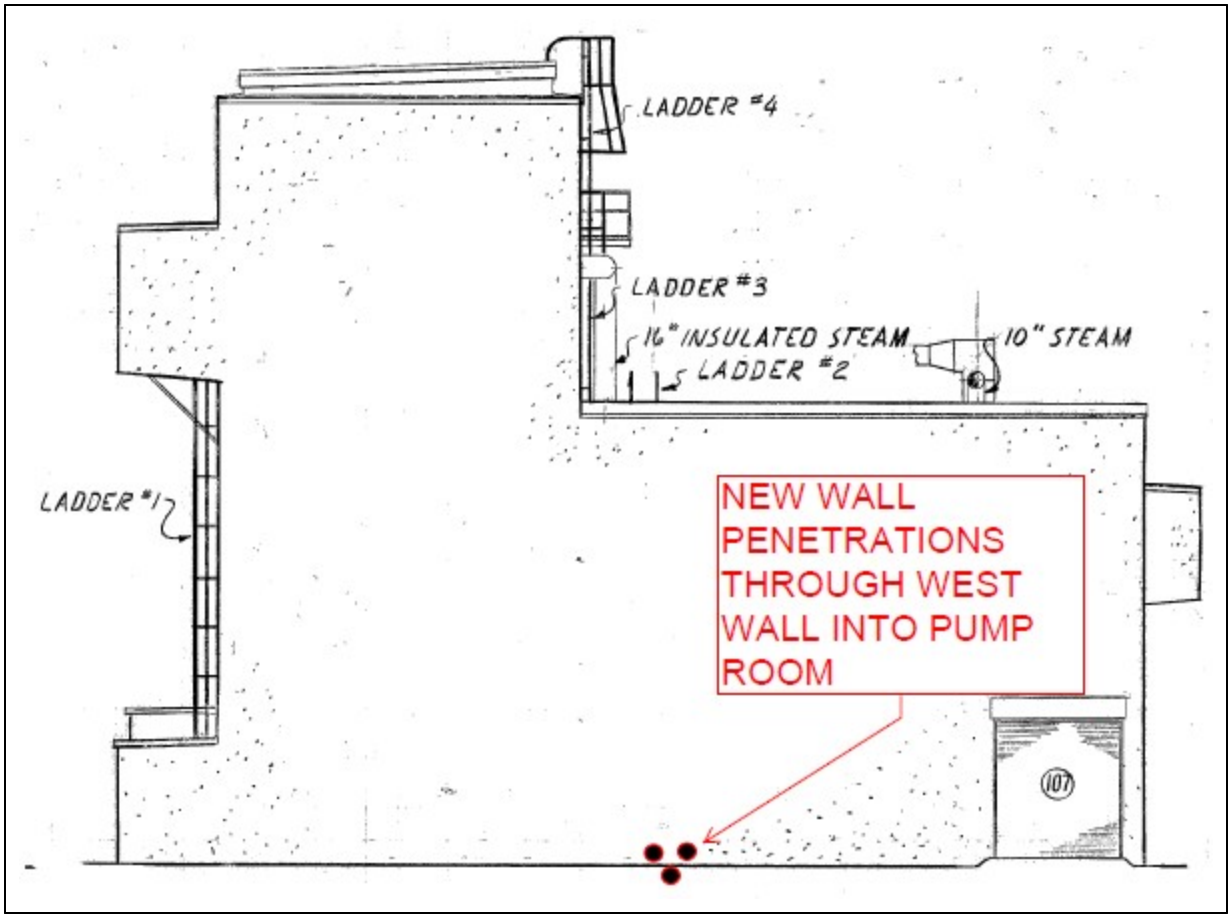

Figure 1. Approximate Location of New Penetrations Through West Wall of 242A Evaporator Building

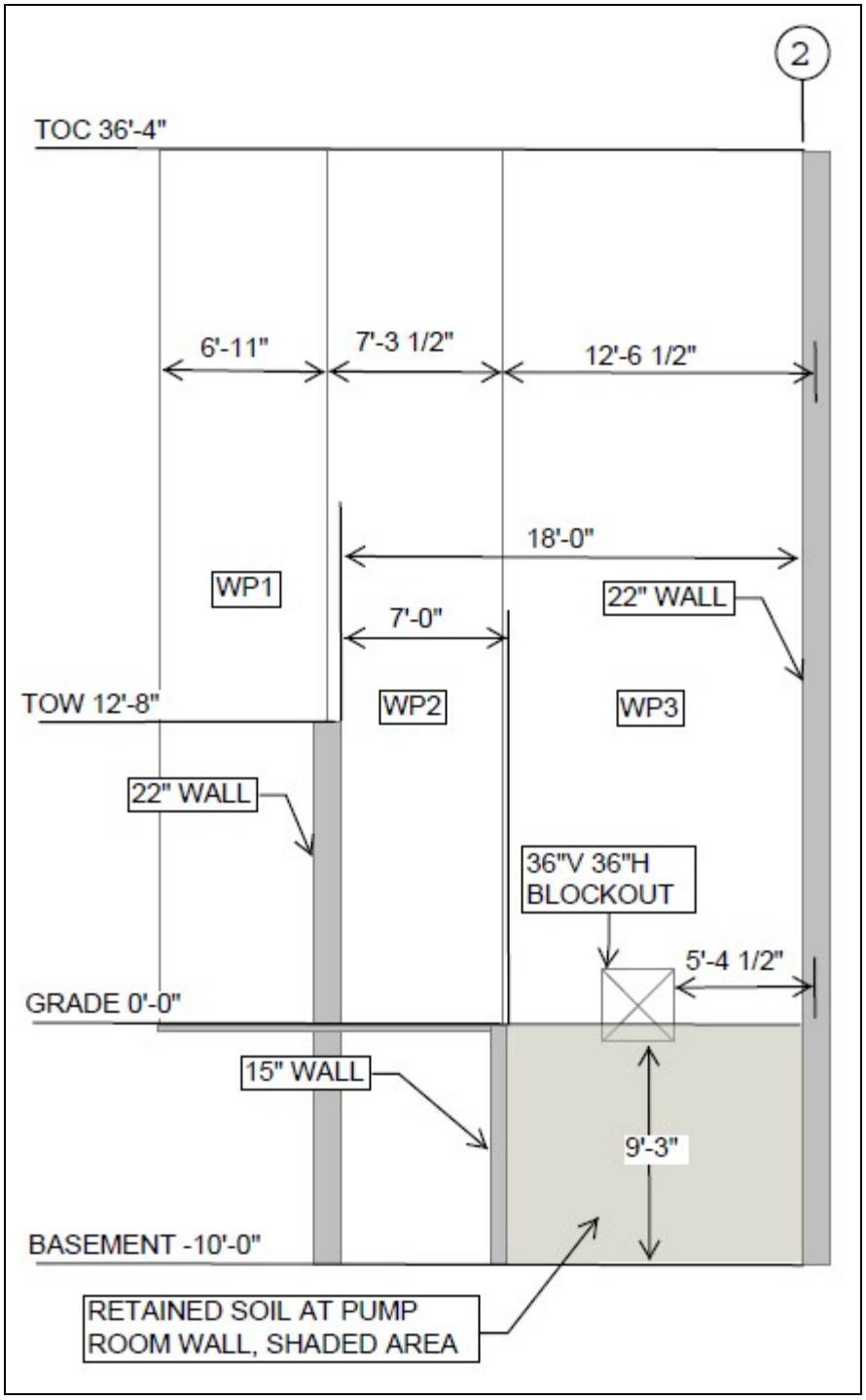

Figure 2. Risa 3D Wall Panel Configuration, Looking From Inside Building

Note that WP1 base is at 0'-0" elevation, and WP2 and WP3 base is at -10'-0" elevation. Additonally, retained soil loading is applied only to the shaded wall panel, the remainder of the walls have soil on both sides.

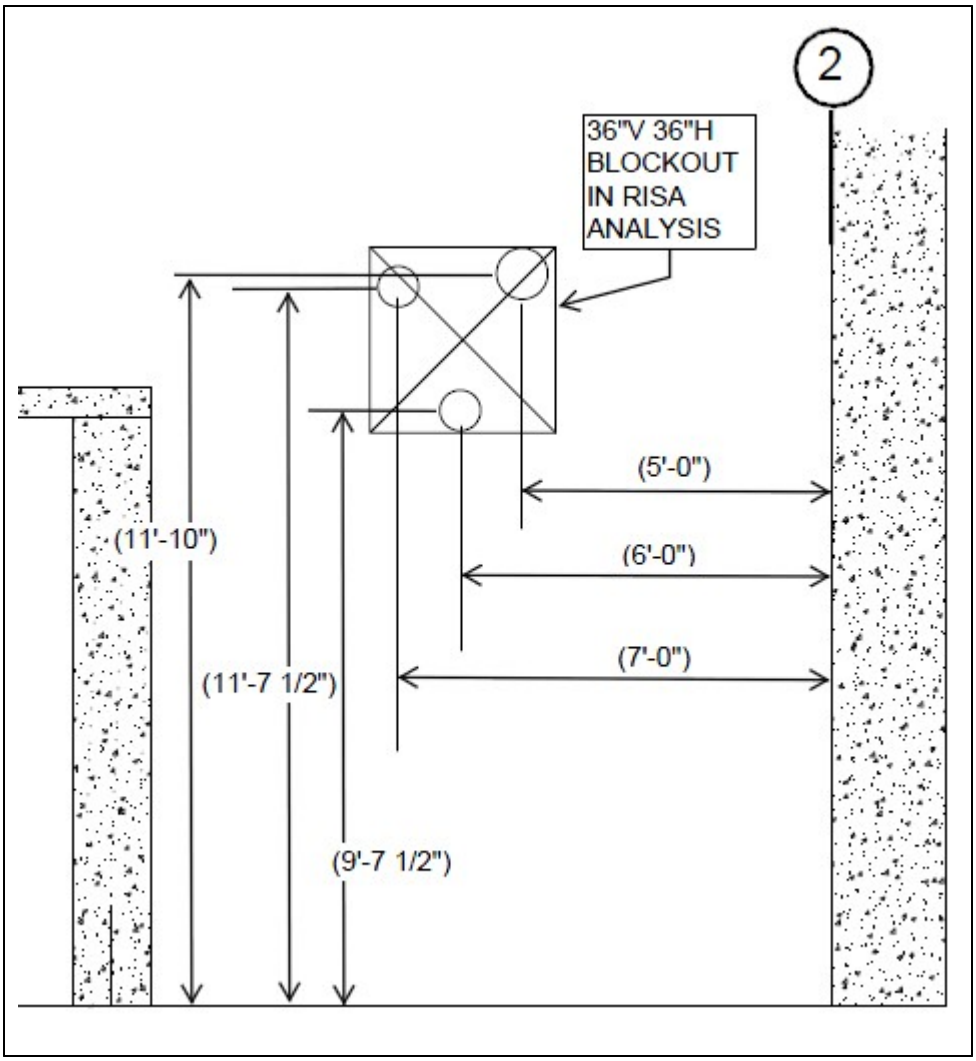

Figure 3. Approximate Core Locations, Looking From Inside Building

Note: Dimensions are approximate as shown. Reference ECN-715004 for record dimensions.

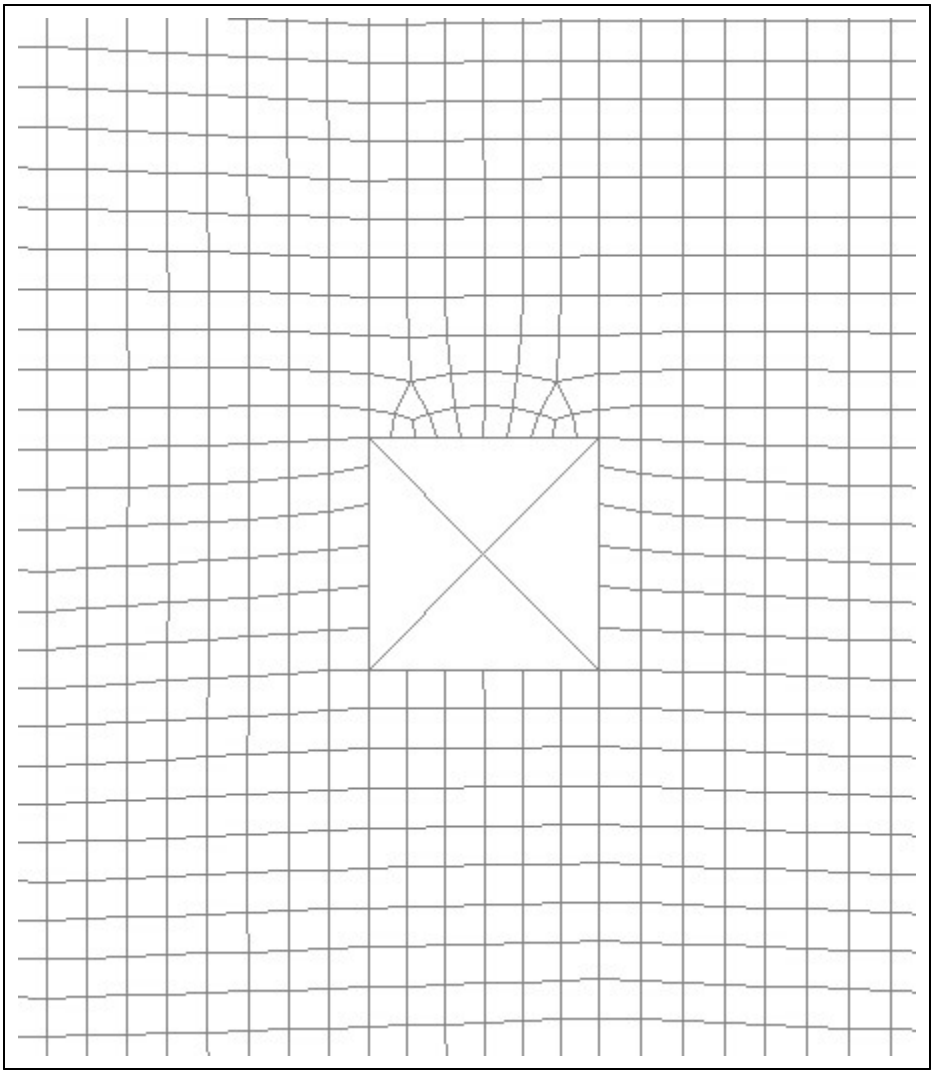

Figure 4. Wall Mesh at Opening

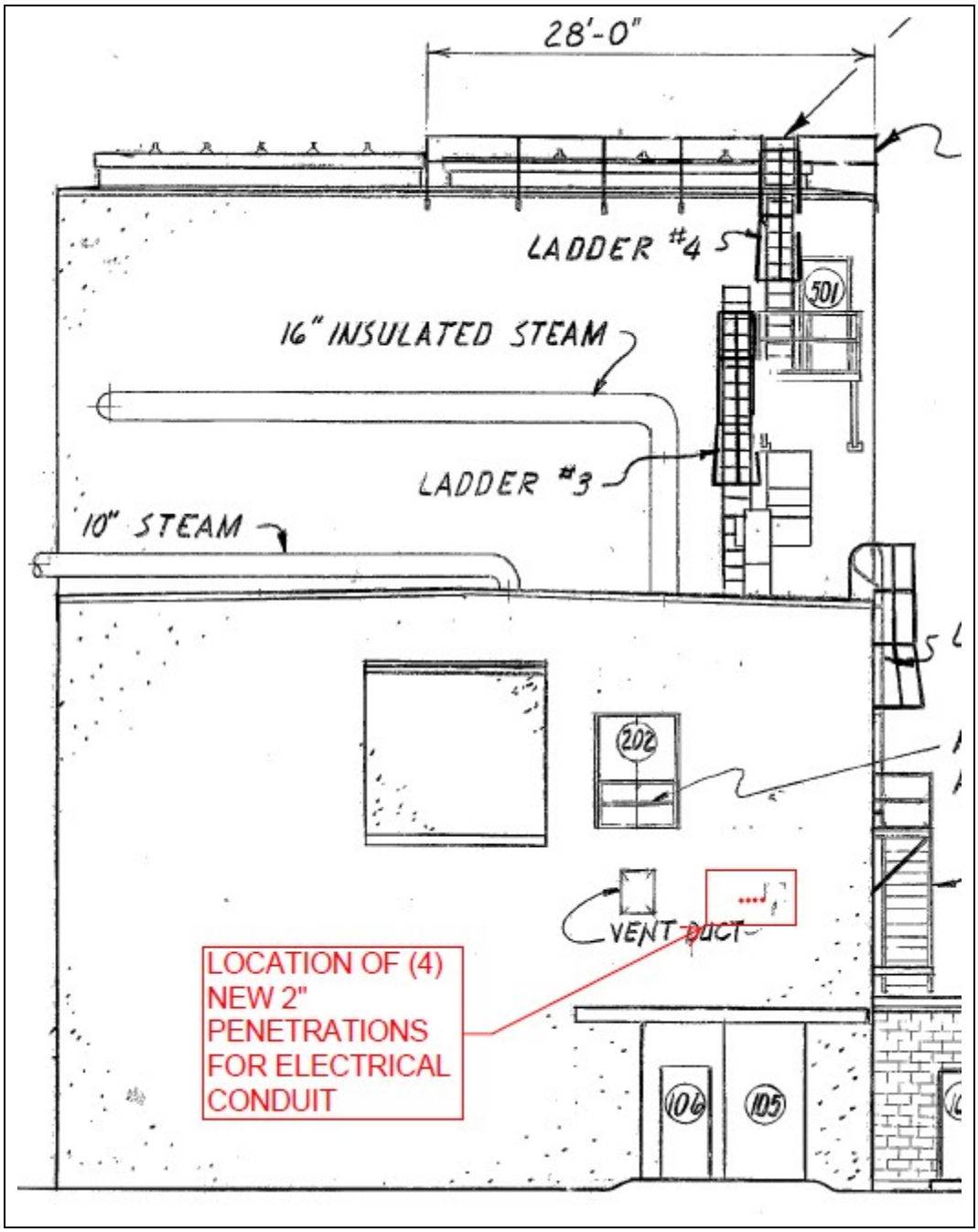

Figure 5. Approximate Location of New Penetrations Through South Wall of 242A Evaporator Building

6.0 RESULTS

6.1 Pump Room Wall

The maximum wall out-of-plane demand capacity ratio occurs at Wall Panel 3 = 0.345 for bending and 0.39 for shear. This is the wall panel with retained soil loading. See Section 10.3.

6.2 Nozzle Anchorage Assembly

The maximum plate stress is 11.2ksi under the applied loading. The maximum DCR for non plate members occurs at the 4" secondary containment pipe = 0.16. See Section 10.4.1.

Maximum anchor DCR = 0.33, with concrete breakout being the controlling failure mode. See Section 10.4.2

6.3 Nozzle Assembly Hoisting

The maximum demand capacity ratio that occurs at the connection of the hoisting fixture to the nozzle assembly is 0.43, which are the welds of the angle brackets to the nozzle plates. See Section 10.5.3.

7.0 CONCLUSIONS

The existing 242A pump room wall has capacity for the planned wall penetrations.

The nozzle anchor assembly has capacity for the applied loading.

The nozzle assemblies have capacity for the imparted loading during hoisting operations.

It is acceptable to place 4 new 2" penetrations in the south wall of the 242A building for new electrical conduit.

8.0 RECOMMENDATIONS

1. Wall nozzle anchors should be carbon steel 3/4" diameter Hilti KB-TZ expansion bolts with 5 1/2" effective embedment into the existing concrete. Follow all manufacturer recommendations for hole preparation and bolt installation, including criteria within ICC ESR-1917.
2. 5/16" carbon steel plate washers are planned for use at the anchorage plates.

9.0 REFERENCES

1. ASCE 7-10, *Minimum Design Loads for Buildings and Other Structures*, American Society of Civil Engineers, 2010.
2. IBC, *International Building Code*, 2015.
3. TFC-ENG-STD-06, Rev. D-1, *Design Loads for Tank Farm Facilities*, Washington River Protection Solutions, LLC, Richland, Washington.
4. AISC, *Steel Construction Manual*, Fourteenth Edition, American Institute of Steel Construction, 2011.
5. ACI 318-14, *Building Code Requirements for Structural Concrete*, American Concrete Institute, 2014.
6. AWS D1.1/D1.1M, *Structural Welding Code - Steel*, 18th Edition, American Welding Society, 2015.
7. ASME BTH-1, *Design of Below-the-Hook Lifting Devices*, 2017.
8. ASTM A36/A 36M, *Standard Specification for Carbon Structural Steel,* American Society of Testing and Materials, 2014.
9. ASTM A615/A 615M, *Standard Specification for Deformed and Plain Carbon-Steel Bars for Concrete Reinforcement,* American Society of Testing and Materials, 2016.
10. ICC ESR-1917, Hilti Kwik Bolt TZ Carbon and Stainless Steel Anchors in Cracked and Uncracked Concrete, ICC Evaluation Service, Report Issued 05-2019.
11. Blodgett, Omer. *Design of Welded Structures*, James F. Lincoln Arc Welding Foundation, 1966.
12. Modification Traveler MT-50400, *242-A Evaporator Waste Transfer Line Replacement*, Rev. 01. Washington River Protection Solutions, Richland, WA.
13. RPP-8360, 2017, *Lifting Attachment and Lifted Item Evaluation*, Rev. 6, Washington River Protection Solutions, LLC, Richland, Washington.
14. ECN-715004, *Core Drill and Install Wall Nozzle 41, 42 and 43 Assemblies at 242-A Evaporator Pump Room*, Rev 01.
15. RPP-CALC-63211, Rev. 0, *ASME B31.3 Analyses of the New SL-170, SL-171, SL-172 and SN-275 Waste Transfer Lines in 241-AW Tank Farm*, Columbia Energy and Environmental Services, Richland, Washington, 2019.
16. RPP-CALC-63213, Rev. 0, *ASME B31.3 Analyses of the 41 to 5 and 43 to 13A Jumpers for the 242-A Evaporator Pump Room*, Columbia Energy and Environmental Services, Richland, Washington, 2019.
17. H-2-69277, Sheet 1, *2008, STRL Foundation Plan Sections & General Notes Areas 1 & 2*, Rev. 3, U.S. Department of Energy, Office of River Protection, Richland, Washington.
18. H-2-69278, Sheet 1, *2008, Structural Sections Elevations & Details Areas 1 & 2*, Rev. 4, U.S. Department of Energy, Office of River Protection, Richland, Washington.
19. H-2-90161, Sheet 1, *2018, Standard Rigid Lifting Bails*, Rev. 6, U.S. Department of Energy, Office of River Protection, Richland, Washington.
20. H-2-99009, Sheet 1&2, *2014, Piping Jumper Arrangement Pump Room*, Rev. 5, U.S. Department of Energy, Office of River Protection, Richland, Washington.
21. H-14-111832, Multiple Sheets, *2019, Wall Nozzle Assemblies 242-A Pump Room*, Rev. 1, U.S. Department of Energy, Office of River Protection, Richland, Washington.
22. Columbia Energy Document CE-SVVR-18-001, Rev. 0, RISA-3D 16.0.5 - COTS Software V&V Report, 2018.

10.0 CALCULATIONS

10.1 Material Properties

$F_{y\_A36} := 36ksi$ — Yield strength (A36), ASTM A36

$F_{u\_A36} := 58ksi$ — Ultimate tensile strength (A36), ASTM A36

$F_{y\_A572\_50} := 50ksi$ — Yield strength (A572), ASTM A572 Grade 50ksi

$F_{u\_A572\_50} := 65ksi$ — Ultimate tensile strength (A572), ASTM A572 Grade 50ksi

$F_{y\_KBTZ} := 84.8ksi$ — Yield strength of Carbon Steel Hilti KB-TZ, ESR-1917

$F_{u\_KBTZ} := 106ksi$ — Ultimate tensile strength of Carbon Steel Hilti KB-TZ, ESR-1917

$\sigma_{conc} := 150pcf$ — Density of normal weight concrete.

10.2 Loading

10.2.1 Dead Loading

Roof Dead Loading:

Material	DL (psf)
Built Up Roof	4.00
Underlayment	1.00
2" Rigid Insulation @ 0.25psf/inch	0.50
12" Normal Weight Concrete = 150pcfx1ft	150.00
Mech/Elect/Plumbing	5.00
Misc	2.50
Total:	163.00

$DL_{rf} := 163psf$ — Total dead load at roof

$L_{rf} := \frac{23}{2}ft = 11.5\,ft$ — Recall tributary width of roof to top of grid line A wall

$W_{DLrf} := DL_{rf} \cdot L_{rf} = 1874.5 \cdot plf$ — Total distributed dead load at top of grid line A wall

10.2.2 Live Loading

$w_{rll} := 20psf$ — Roof live loading. TFC-ENG-STD-06, Section 3.5.2

$L_{rf} := \frac{23}{2} ft = 11.5\ ft$ — Tributary width of roof to top of Grid A wall

$W_{RLL} := w_{rll} \cdot L_{rf} = 230 \cdot plf$ — Total distributed roof live load at top of Grid A wall

10.2.3 Snow Loading

All Sections, Tables, Equations, and Figures listed are from ASCE 7-10 unless noted otherwise.

Flat Snow Load

$p_g := 15psf$ — Ground snow load. TFC-ENG-STD-06, Section 3.5.3

$C_e := 0.9$ — Exposure factor, terrain category C, fully exposed, Table 7-2

$C_t := 1.0$ — Thermal factor, Table 7-3

$I_s := 1.2$ — Snow importance factor, Table 1.5-2, Risk Category IV

$p_f := 0.7 \cdot C_e \cdot C_t \cdot I_s \cdot p_g = 11.34 \cdot psf$ — Flat snow load, EQN 7.3-1

$p_m := I_s \cdot p_g = 18 \cdot psf$ — Minimum flat snow load, Section 7.3.4

$w_{sl} := \max(p_f, p_m) = 18 \cdot psf$ — Design snow load

$L_{rf} := \frac{23}{2} ft = 11.5\ ft$ — Recall tributary width of roof to top of Grid A wall

$W_{SL} := w_{sl} \cdot L_{rf} = 207 \cdot plf$ — Total distributed flat snow load at top of Grid A wall. Roof live load controls for gravity combinations

Drift Snow Load

Snow will drift against the high wall at Grid 2. This drift loading will potentially load the Grid A wall in the vicinity of the new wall penetrations. Accordingly, drift loading will be accounting for in this area.

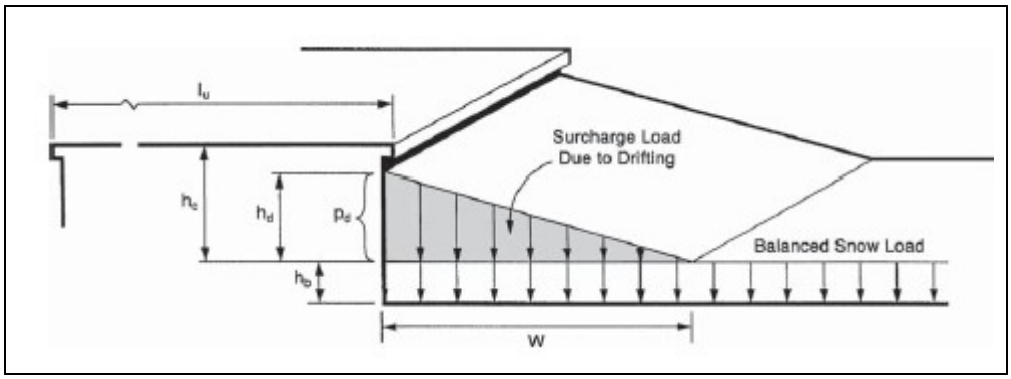

Figure 6. Snow Drift Loading. (ASCE 7-10 Figure 7-8)

$L_{uu} := 30ft$ — Length of upper roof

$L_{ul} := 46ft$ — Length of lower roof

$H_c := 25ft$ — Roof step height

$C_s := 1.0$ — Roof slope factor, Figure 7-2

$p_s := C_s \cdot w_{sl} = 18 \cdot psf$ — Balanced snow load, EQN 7.4-1

$\gamma_{sl} := \min\left(0.13 \cdot \frac{p_g}{psf} + 14, 30\right) pcf = 16 \cdot pcf$ — Snow density, EQN 7.1-1

$h_b := \frac{p_s}{\gamma_{sl}} = 1.13\,ft$ — Height of balanced snow, Section 7.7.1

$h_c := H_c - h_b = 23.9\,ft$ — Clear height from top of balanced snow load to top of step

$\frac{h_c}{h_b} = 21.2$ — hc/hb > 0.2. Per Section 7.7.1, drift loading is required to be considered

Leeward Drift Height on Lower Roof

$L_{ulw} := \max(L_{uu}, 20ft) = 30\,ft$

Minimum roof length for use in Figure 7-9 equation is 20ft

$$h_{dlw} := \left(0.43 \cdot \sqrt[3]{\frac{L_{ulw}}{ft}} \cdot \sqrt[4]{\frac{p_g}{psf} + 10} - 1.5\right) ft = 1.49\,ft$$

Drift height, Figure 7-9

Windward Drift Height on Lower Roof

$L_{uww} := \max(L_{ul}, 20ft) = 46\,ft$

Minimum roof length for use in Figure 7-9 equation is 20ft

$$h_{dww} := 0.75\left(0.43 \cdot \sqrt[3]{\frac{L_{uww}}{ft}} \cdot \sqrt[4]{\frac{p_g}{psf} + 10} - 1.5\right) ft = 1.46\,ft$$

Drift height, Figure 7-9, Section 7.7.1

$h_d := \max(h_{dlw}, h_{dww}) = 1.49\,ft$

Controlling drift height from leeward and windward directions

Design Snow Drift Load on Lower Roof

$$\frac{h_d}{h_c} = 0.06$$

If this value is less than or equal to 1.0 the drift width is equal to 4hd, and the drift height is equal to hd. If greater than 1.0 the drift width is 4hd^2/hc and the drift height shall be equal to hc. However, the drift width W shall not be greater than 8hc. Section 7.7.1

$$W_1 := \begin{cases} 4 \cdot h_d & \text{if } \frac{h_d}{h_c} \le 1.0 \\ \frac{4 \cdot h_d^2}{h_c} & \text{otherwise} \end{cases}$$

$W_1 = 6\,ft$

Length of drift on lower roof, Section 7.7.1

$W_{drft} := \min(8h_c, W_1) = 6\,ft$

Minimum drift width, Section 7.7.1

$$h_{d1} := \begin{cases} h_d & \text{if } \dfrac{h_d}{h_c} \le 1.0 \\ h_c & \text{otherwise} \end{cases}$$

$h_{d1} = 1.49\,\text{ft}$ — Height of drift on lower roof, Section 7.7.1

$w_{drft} := h_{d1} \cdot \gamma_{sl} = 23.73 \cdot \text{psf}$ — Maximum design drift load at peak of drift

$L_{rf} := \dfrac{23}{2}\,\text{ft} = 11.5\,\text{ft}$ — Recall tributary width of roof to top of Grid A wall

$W_{SLDRFT} := w_{drft} \cdot L_{rf} = 273 \cdot \text{plf}$ — Total maximum distributed drift snow load at top of Grid A wall.

10.2.4 Wind Loads

All Sections, Tables, Equations, and Figures listed are from ASCE 7-10 unless noted otherwise.

Exposure C	Wind Exposure
$V_w := 115$	Wind speed, 3 second gust, TFC-ENG-STD-06, Table 4 (Strength Level), WDC-2 Loading
$k_d := 0.85$	Directionality factor, Table 26.6-1
$k_{zt} := 1.0$	Topographic factor, Section 26.8.2
$k_z := 1.02$	Velocity pressure coefficient for 36ft height, Table 27.3-1. Use this for full height of evaporator wall
$G_w := 0.85$	Gust effect factor, Section 26.9.1
$q_z := 0.00256 \cdot k_z \cdot k_{zt} \cdot k_d \cdot V_w^2 \cdot psf$	Velocity pressure, EQN 27.3-1 (Strength Level)
$q_z = 29.35 \cdot psf$	
$C_{pw} := 0.8$	Windward wall pressure coefficient, Figure 27.4-1
$C_{pl} := -0.50$	Leeward wall pressure coefficient, Figure 27.4-1
$C_{ps} := -0.7$	Side wall pressure coefficient, Figure 27.4-1
$GC_{pi} := -0.18$	Internal pressure coefficient from Table 26.11-1

Wind pressures to apply in model. Negative GCpi values control roof and side wall pressures, use for design.

$W_w := q_z \cdot G_w \cdot C_{pw} - q_z \cdot GC_{pi}$	Windward wall pressure, EQN 27.4-1. (Strength Level)
$W_w = 25.24 \cdot psf$	Apply this wall pressure to RISA wall model

10.2.5 Seismic Loads

All Sections, Tables, Equations, and Figures listed are from ASCE 7-10 unless noted otherwise.

The 242A evaporator wall will be treated as NDC-2, correlating with SDC-2 and Limit State C. Wall out of plane forces will be determined per ASCE 7-10, Section 12.11.1.

Seismic Design Category (SDC) = 2	Table 5, TFC-ENG-STD-06
Risk Category = IV	Table 5, TFC-ENG-STD-06
$S_{DS} := 0.588g$	Horizontal design 5% Damped spectral response acceleration parameter at short periods, TFC-ENG-STD-06, Section 3.5.5.2
$I_e := 1.5$	Seismic importance factor, Table 5, TFC-ENG-STD-06
$\alpha_e := 1.2$	Note that any amplification factor used to increase seismic loading for wall out of plane forces is not addressed in TFC-ENG-STD-06. Accordingly, the wall out of plane forces will be increased by a factor of 1.2, using the same methodology prescribed in Table 6 of TFC-ENG-STD-06.
$F_p := 0.4 \cdot \alpha_e \cdot S_{DS} \cdot I_e = 0.42 \cdot g$	Design out of plane acceleration for use in wall out of plane checks. Section 12.11.1
$t_{wall} := 22in$	Thickness of Grid A wall
$w_{wall} := \sigma_{conc} \cdot t_{wall} = 275 \cdot psf$	Self weight of Grid A wall
$W_e := \frac{F_p}{g} \cdot w_{wall} = 116.42 \cdot psf$	Wall out of plane force to apply to RISA model. (Strength Level). Apply to RISA wall model
$W_{ev} := 0.2 \cdot \frac{S_{DS}}{g} = 0.12$	Vertical acceleration for wall design

10.3 Grid A Wall Checks with New Penetrations

Wall Panel 1 Design Results

CRITERIA		MATERIALS			GEOMETRY		
Code	: ACI 318-14	Material Set	: Conc3000NW		Total Height	: 436	in
Design Rule	: 242A 22" Wall	Concrete f'c	: 3000	ksi	Total Length	: 83	in
Seismic Rule	: None	Concrete E	: 3156	ksi	Thickness	: 22	in
Loc of r/f	: Each Face	Concrete G	: 1372	ksi			
Outer Bars	: Horizontal	Conc Density	: 145	lb/ft^3	Int Cover (-z)	: 2	in
		Lambda	: 1		Ext Cover (+z)	: 2	in
Vert Bar Size	: #5	Conc Str Blk	: Rectangular		Cover Open/Edge	2	in
Horz Bar Size	: #5				K	: 1	
		Vert Bar Fy	: 60000	ksi	Use Cracked?	: Yes	
Transfer In?	: No	Horz Bar Fy	: 60000	ksi	In Icr Factor	: .35	
Transfer Out?	: No	Steel E	: 29000	ksi	Out Icr Factor	: .35	
Group Wall?	: No						

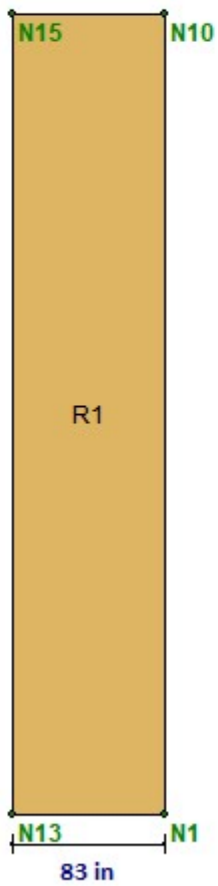

REGION RESULTS

Region	UC Max In Plane	LC	UC Shear In Plane	LC	Delta Max In Plane(in)	LC	UC Max Out Plane	LC	UC Shear Out Plane	LC	Delta Max Out Plane(in)	LC
R1	.064	1	.086	1	N/A	N/A	.048	7	.02	7	N/A	N/A

REINFORCEMENT RESULTS

Region	Vertical Reinforcement	Horizontal Reinforcement	Diagonal Reinforcement
R1	#5@12in oc e.f.	#5@12in oc e.f.	

Wall Panel 2 Design Results

CRITERIA		MATERIALS			GEOMETRY		
Code	: ACI 318-14	Material Set	: Conc3000NW		Total Height	: 556	in
Design Rule	: 242A 22" Wall	Concrete f'c	: 3000	ksi	Total Length	: 87.5	in
Seismic Rule	: None	Concrete E	: 3156	ksi	Thickness	: 22	in
Loc of r/f	: Each Face	Concrete G	: 1372	ksi			
Outer Bars	: Horizontal	Conc Density	: 145	lb/ft^3	Int Cover (-z)	: 2	in
		Lambda	: 1		Ext Cover (+z)	: 2	in
Vert Bar Size	: #5	Conc Str Blk	: Rectangular		Cover Open/Edge	2	in
Horz Bar Size	: #5				K	: 1	
		Vert Bar Fy	: 60000	ksi	Use Cracked?	: Yes	
Transfer In?	: No	Horz Bar Fy	: 60000	ksi	In Icr Factor	: .35	
Transfer Out?	: No	Steel E	: 29000	ksi	Out Icr Factor	: .35	
Group Wall?	: No						

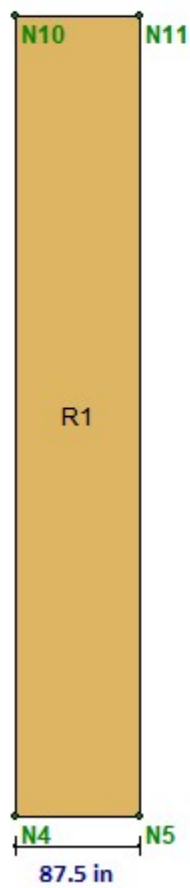

REGION RESULTS

Region	UC Max In Plane	LC	UC Shear In Plane	LC	Delta Max In Plane(in)	LC	UC Max Out Plane	LC	UC Shear Out Plane	LC	Delta Max Out Plane(in)	LC
R1	.029	1	.05	1	N/A	N/A	.052	7	.054	7	N/A	N/A

REINFORCEMENT RESULTS

Region	Vertical Reinforcement	Horizontal Reinforcement	Diagonal Reinforcement
R1	#5@12in oc e.f.	#5@12in oc e.f.	

Wall Panel 3 Design Results

CRITERIA

Code	:	ACI 318-14
Design Rule	:	242A 22" Wall
Seismic Rule	:	None
Loc of r/f	:	Each Face
Outer Bars	:	Horizontal
Vert Bar Size	:	#5
Horz Bar Size	:	#5
Transfer In?	:	No
Transfer Out?	:	No
Group Wall?	:	No

MATERIALS

Material Set	:	Conc3000NW	
Concrete f'c	:	3000	ksi
Concrete E	:	3156	ksi
Concrete G	:	1372	ksi
Conc Density	:	145	lb/ft^3
Lambda	:	1	
Conc Str Blk	:	Rectangular	
Vert Bar Fy	:	60000	ksi
Horz Bar Fy	:	60000	ksi
Steel E	:	29000	ksi

GEOMETRY

Total Height	:	556	in
Total Length	:	150.5	in
Thickness	:	22	in
Int Cover (-z)	:	2	in
Ext Cover (+z)	:	2	in
Cover Open/Edge		2	in
K	:	1	
Use Cracked?	:	Yes	
In Icr Factor	:	.35	
Out Icr Factor	:	.35	

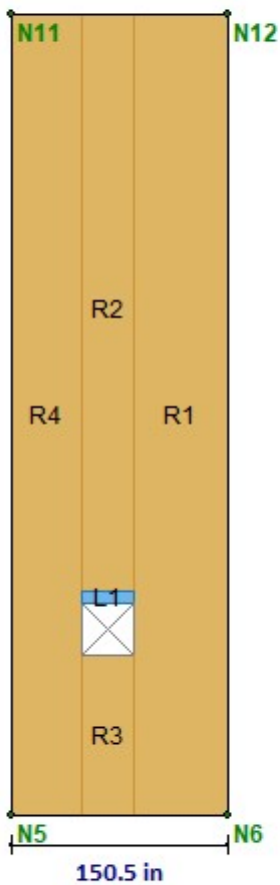

REGION RESULTS

Region	UC Max In Plane	LC	UC Shear In Plane	LC	Delta Max In Plane(in)	LC	UC Max Out Plane	LC	UC Shear Out Plane	LC	Delta Max Out Plane(in)	LC
R1	.024	1	.094	1	N/A	N/A	.191	7	.257	7	N/A	N/A
R2	.012	1	.057	1	N/A	N/A	.037	7	.034	7	N/A	N/A
R3	.004	1	.004	1	N/A	N/A	.345	5	.39	7	N/A	N/A
R4	.01	1	.031	1	N/A	N/A	.056	7	.051	7	N/A	N/A

Wall Panel 3 Design Results Continued

REINFORCEMENT RESULTS

Region	Vertical Reinforcement	Horizontal Reinforcement	Diagonal Reinforcement
R1	#5@12in oc e.f.	#5@12in oc e.f.	
R2	#5@12in oc e.f.	#5@12in oc e.f.	
R3	#5@12in oc e.f.	#5@12in oc e.f.	
R4	#5@12in oc e.f.	#5@12in oc e.f.	

10.4 Grid A Wall Nozzle Anchors

10.4.1 Design of Exterior Plate and Anchors

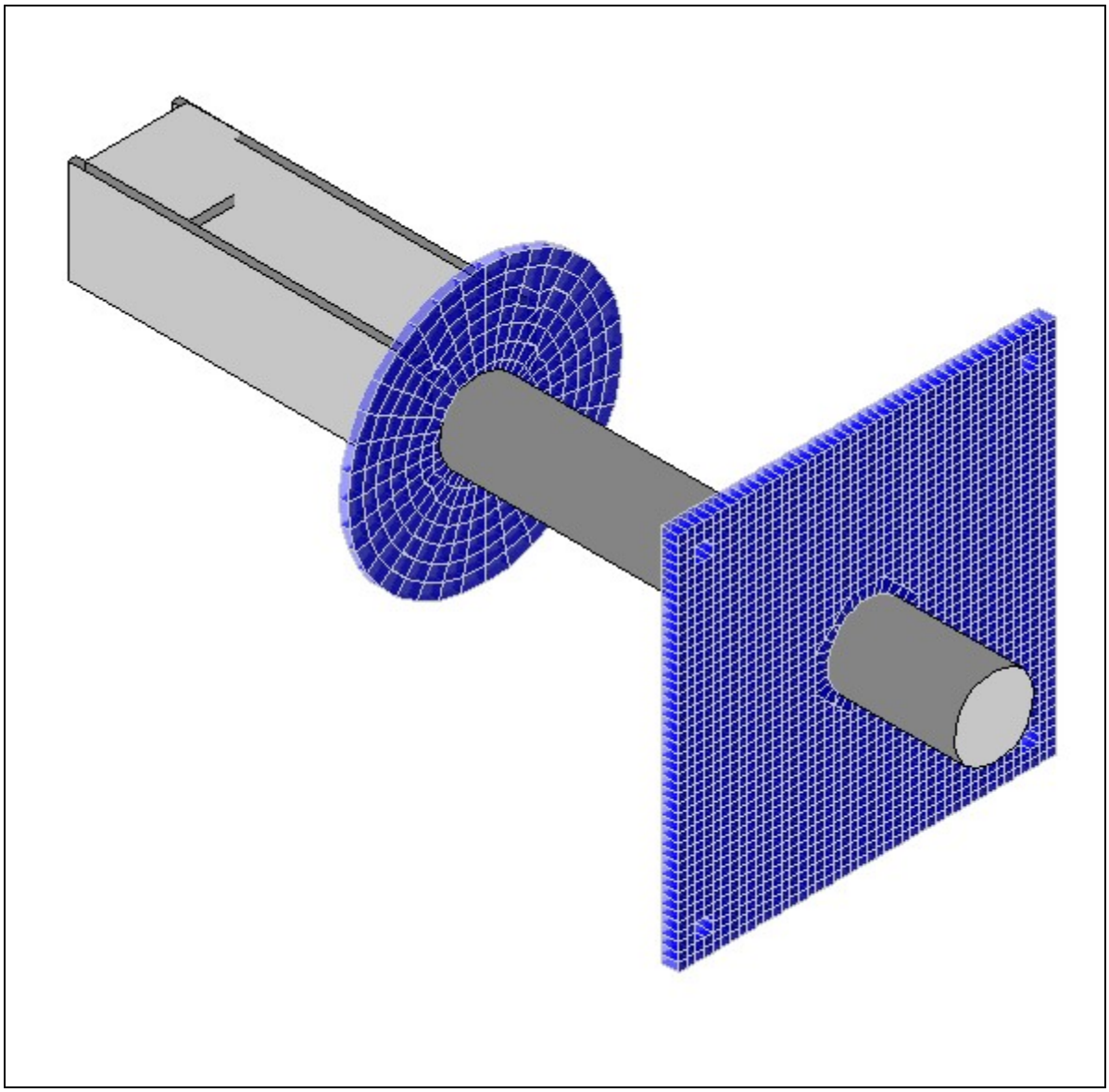

Figure 7. Nozzle Anchor Plate Assembly Layout

The nozzle assemblies will be designed for both the incoming nozzle loads from the transfer lines as well as the applied nozzle loading due to jumpers on the inside of the building. The incoming nozzle loads consist of a combination of both the transfer lines and encasements. B03, the 3" line, controls in terms of applied forces to the anchorage plate. The primary lines are welded to the circular interior plate, this is where the primary loading will be applied. The encasements are welded to the anchorage plate on the outside of the pump room wall, this is where the encasement loading will be applied. A summary of the forces are below.

Transfer Lines:

Primary Seismic/Sustained

- Global Horizontal Tension (TX) = 291lbs. Use 300lbs for design.
- Global Vertical Shear (VY) = 25lbs. Use 50lbs for design.
- Global Horizontal Shear (VZ) = 41lbs. Use 50lbs for design.
- Global Torsion Moment (MX) = 19ft-lbs. Use 25ft-lbs for design.
- Global Vertical Moment (MY) = 232ft-lbs. Use 250ft-lbs for design.
- Global Horizontal Moment (MZ) = 52ft-lbs. Use 75ft-lbs for design.

Primary Thermal

- Global Horizontal Tension (TX) = 328lbs. Use 350lbs for design.
- Global Vertical Shear (VY) = 126lbs. Use 150lbs for design.
- Global Horizontal Shear (VZ) = 41lbs. Use 50lbs for design.
- Global Torsion Moment (MX) = 15ft-lbs. Use 25ft-lbs for design.
- Global Vertical Moment (MY) = 206ft-lbs. Use 225ft-lbs for design.
- Global Horizontal Moment (MZ) = 154ft-lbs. Use 175ft-lbs for design.

Encasement Thermal

- Global Horizontal Tension (TX) = 416lbs. Use 450lbs for design.
- Global Vertical Shear (VY) = 51lbs. Use 100lbs for design.
- Global Horizontal Shear (VZ) = 26lbs. Use 50lbs for design.
- Global Torsion Moment (MX) = 96ft-lbs. Use 100ft-lbs for design.
- Global Vertical Moment (MY) = 539ft-lbs. Use 550ft-lbs for design.
- Global Horizontal Moment (MZ) = 101ft-lbs. Use 125ft-lbs for design.

Interior Jumpers (RPP-CALC-63213):

The jumper nozzle restraint reactions from RPP-CALC-63213 are from two different load combinations from Auto Pipe. They are as follow:

- GT1P1 = Gravity + Thermal + Pressure
- GE5 = Gravity + Earthquake

Both combinations will be applied to the nozzle assembly RISA model. GT1P1 will be factored by 1.2 to bring it up to strength level in the RISA analysis, and GE5 will be factored by 1.4 to bring it up to strength level in the RISA analysis. Note that factoring GE5 by 1.4 will be conservative because these values have deadload included.

GT1P1 @ B00 Load Combination:	**GE5 @ A13 Load Combination:**
Applied Global X Moment = 12lb-ft	Applied Global X Moment = 73lb-ft
Applied Global Y Moment = 3lb-ft	Applied Global Y Moment = 2lb-ft
Applied Global Z Moment = 49lb-ft	Applied Global Z Moment = 49lb-ft
Applied Global X Shear = 419lb	Applied Global X Shear = 31lb
Applied Global Y Shear = 491lb	Applied Global Y Shear = 84lb
Applied Global Z Shear = 12lb	Applied Global Z Shear = 26lb

Note: Self weight of all modeled components is accounted for in RISA

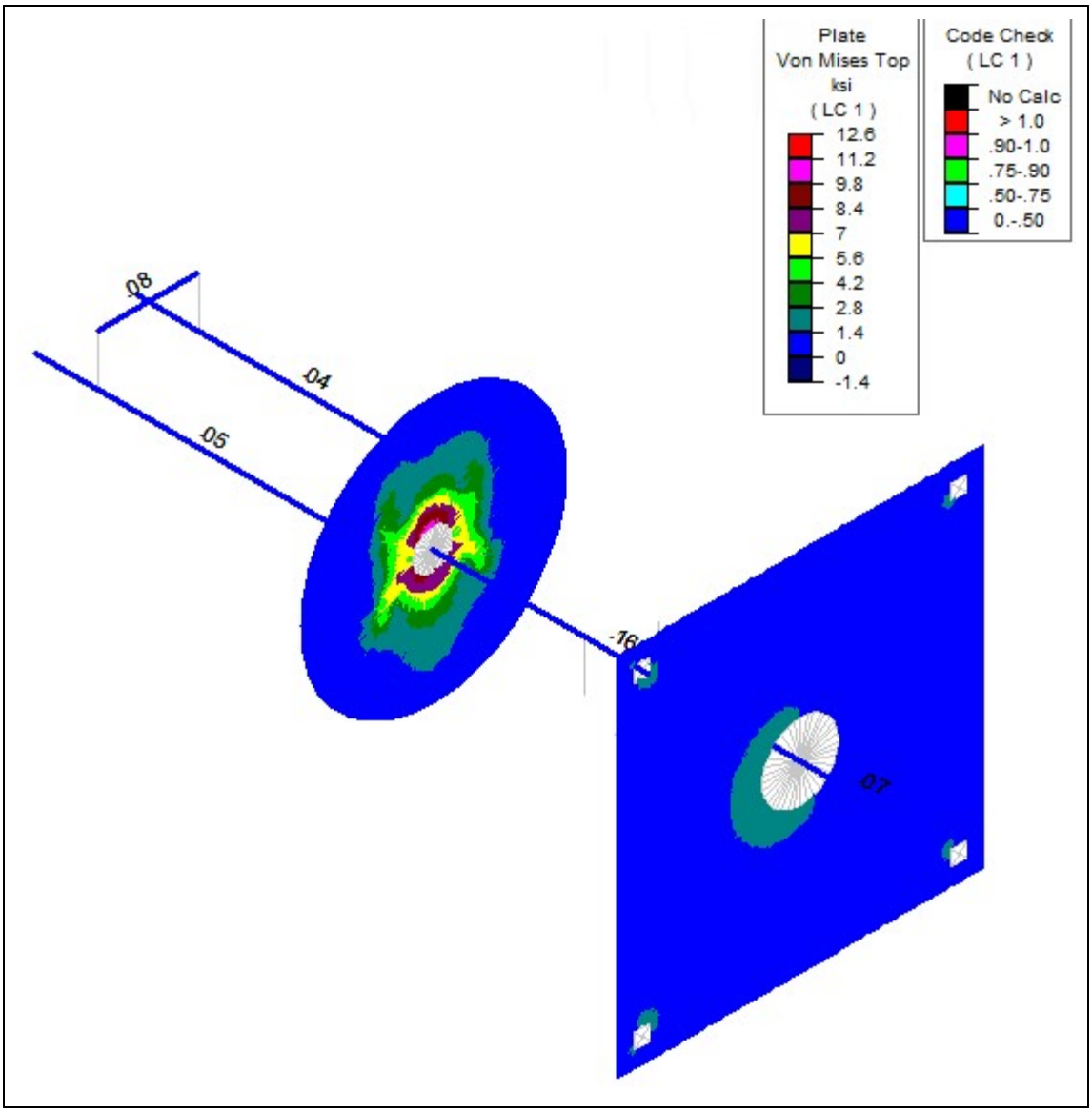

Figure 8. Nozzle Anchor Plate Stresses (1.2DL + 1.2Thermal + 1.2GT1P1)

0.9(36ksi) = 32.4ksi > 12.6 ksi. The plates have sufficient capacity for the applied loading

Controlling demand capacity ratio for non-plate element occurs at the 4" secondary containment pipe, with DCR = 0.16 < 1.0.

10.4.2 Anchorage Design

Unless noted otherwise, the anchorage design calculations reference ACI 318-14 and AISC 14th using LRFD design methodologies and ultimate forces. The applied loads occur concurrently at all three plates. Thermal loading controls the reactions. The reactions noted below include plate prying at the anchors. Because of this, there is concurrent tension loading at the anchors located 5" apart, as noted below. These two critical anchors will be considered as an anchor group.

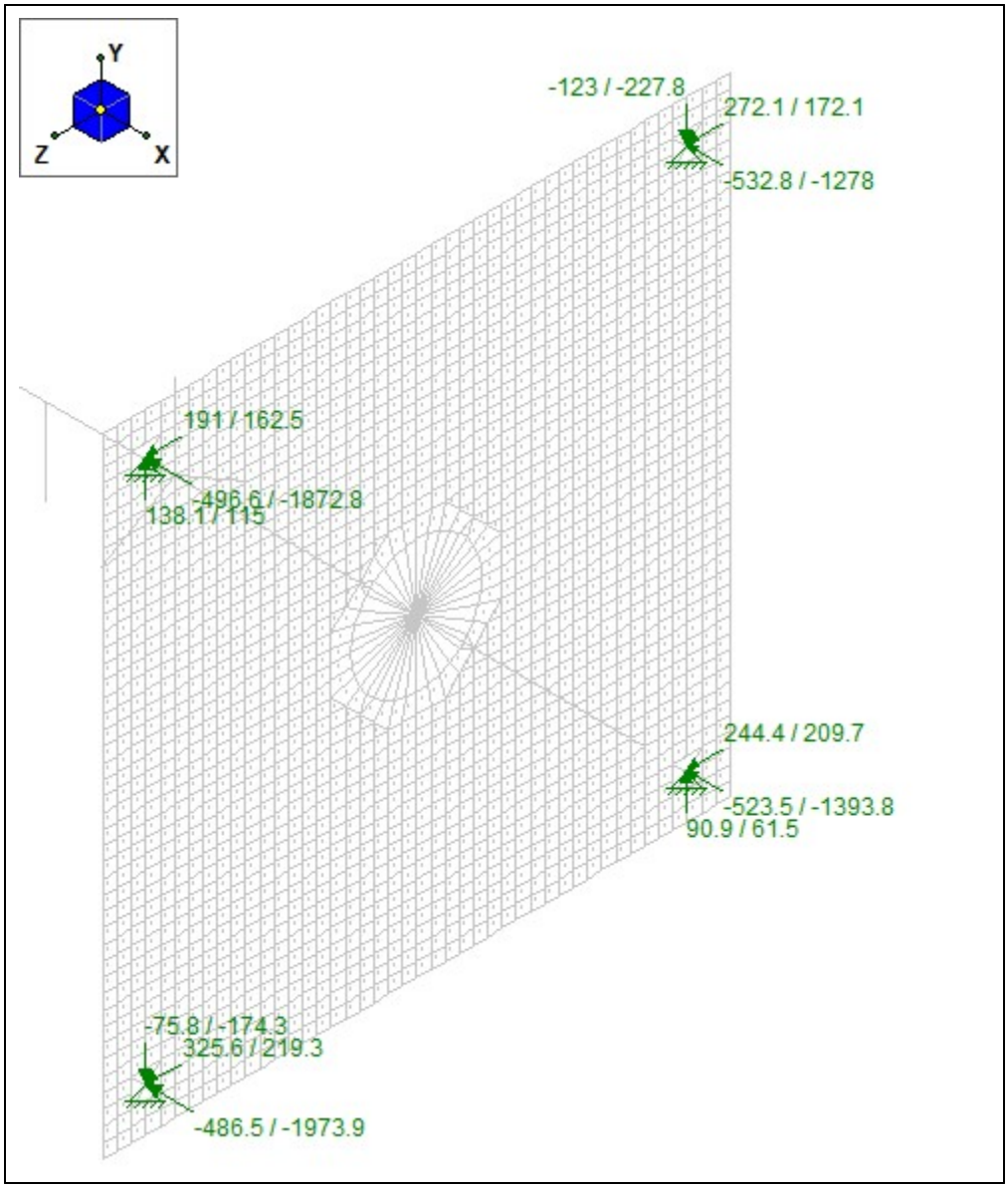

Figure 9. Nozzle Anchor Plate Reactions 1.2DL + 1.2Thermal + 1.2GT1P1

Single Anchor Reactions From RISA 3D:

$T_{U1} := 1974 lbf$ — Maximum Ultimate Global X Tension on heel of plate, resisting moment, axial, and prying

$T_{U2} := 1394 lbf$ — Maximum Ultimate Global X Tension on toe of plate, resisting axial and prying

$V_{UZ} := 326 lbf$ — Maximum Ultimate Global Z Shear

$V_{UY} := 228 lbf$ — Maximum Ultimate Global Y Shear

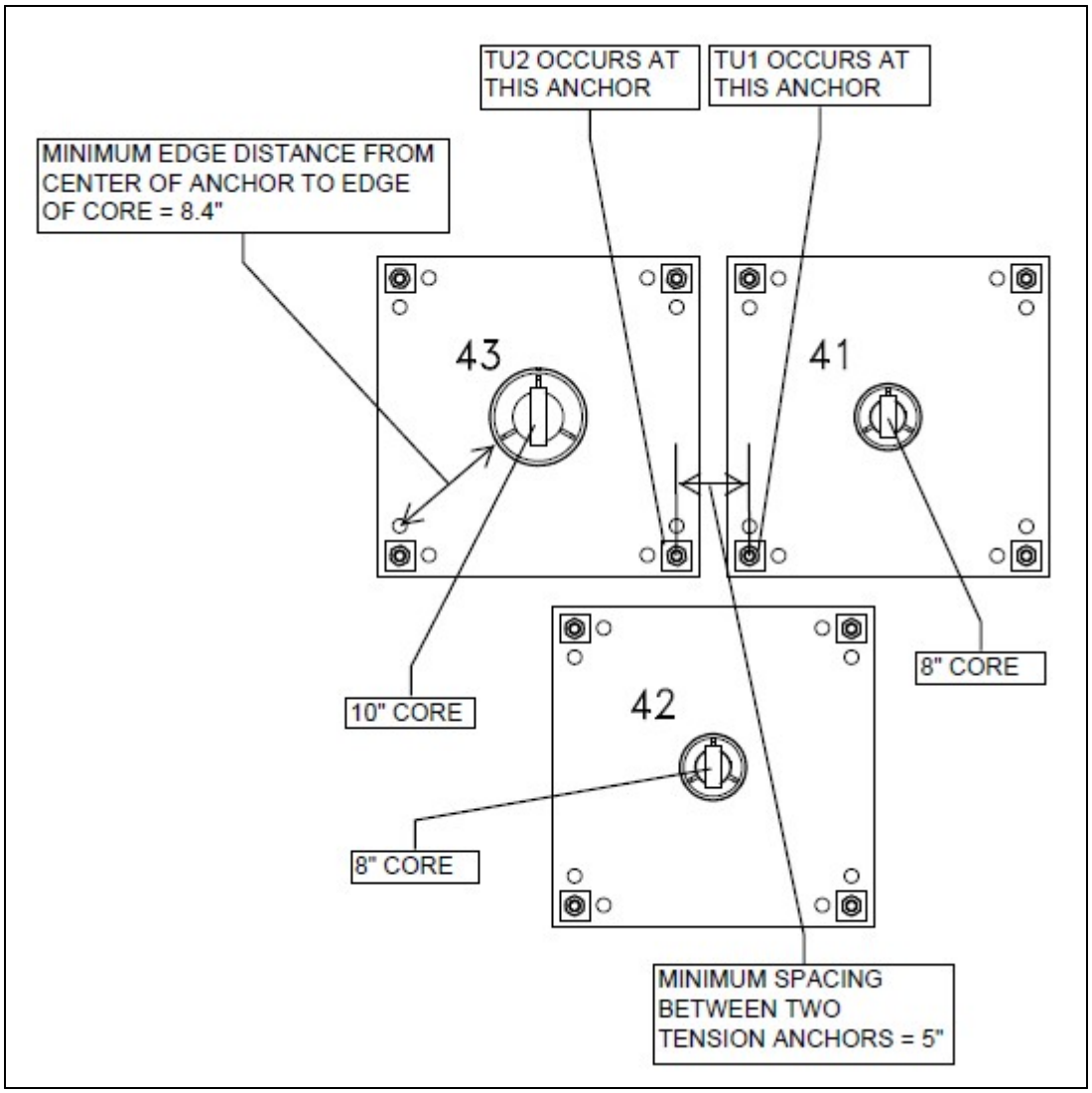

Figure 10. Nozzle Anchor Plate Layout

Define Geometry of Embed Connection
Reference ACI 318 Figure R17.4.2.1 for definitions

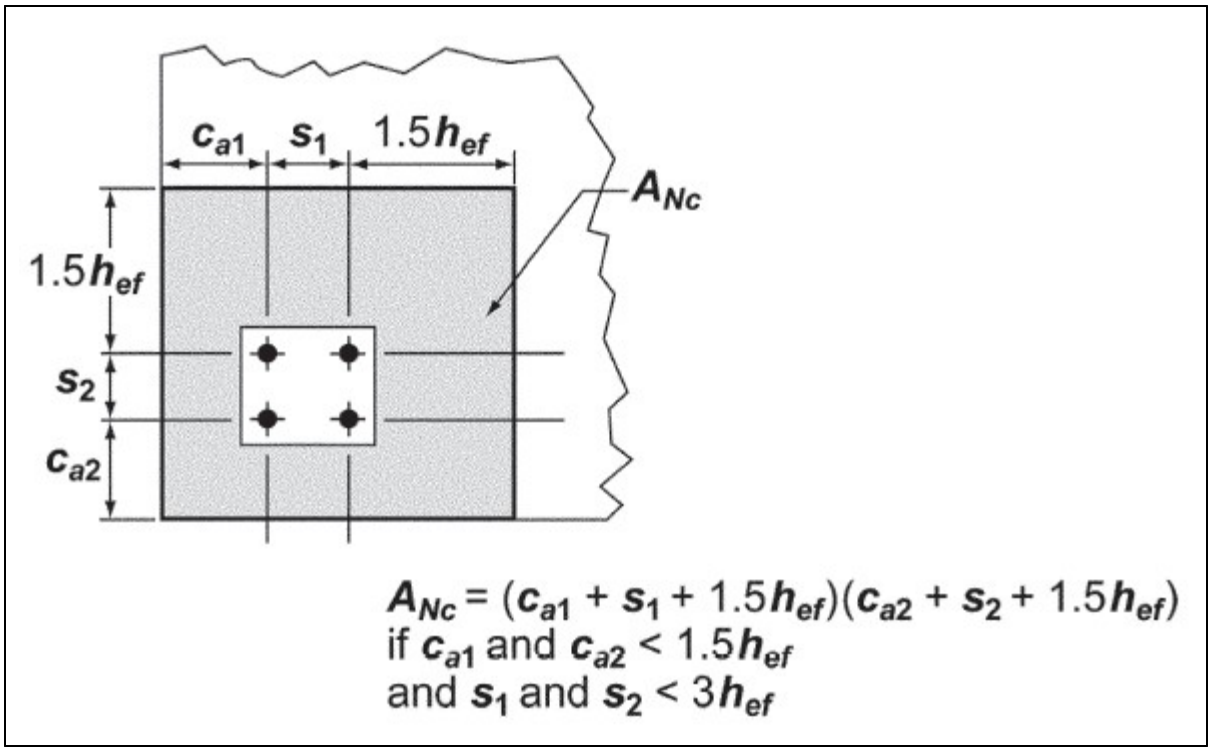

Figure 11. ACI 318-14 Anchorage Geometry Definitions

$c_{a1} := 8.4in$	$h_{ef} := 5.5in$	Effective embed of anchors
$s_1 := 5in$	$n := 2$	Number of anchors in the group
$t_{wall} = 22 \cdot in$	$d_{ba} := 0.75in$	Anchor diameter

The following limit states apply to the anchor design and will be checked below. Per ESR-1917 Table 3, 3/4" Carbon Steel KB-TZ anchors are a Category 1 post-installed concrete anchor. Strength reduction factors will be based on this for all concrete failure modes.

TENSION:

- Anchor tension capacity (ACI 318-14 17.4.1)
- Concrete breakout check (ACI 318-14 17.4.2)
- Pullout strength of anchor (ACI 318-14 17.4.3)
- Side-face blowout of anchor (ACI 318-14 17.4.4)

SHEAR:

- Anchor shear capacity (ACI 318-14 17.5.1)
- Concrete breakout check of anchor (ACI 318-14 17.5.2)

Check Anchor Tension Capacity:
Section 17.4.1

$\phi_{1t} := 0.75$ — Strength reduction factor, Section 17.3.3 for a ductile steel anchor

$f_{ya} := F_{y\_KBTZ} = 84.8 \cdot ksi$ — Recall anchor yield stress

$f_{uta} := F_{u\_KBTZ} = 106 \cdot ksi$ — Recall anchor tensile stress

$$f_{uta} := \begin{cases} f_{uta} & \text{if } f_{uta} \le \min(1.9 \cdot f_{ya}, 125000psi) \\ \min(1.9 \cdot f_{ya}, 125000psi) & \text{otherwise} \end{cases}$$

Check to make sure tension capacity meets Section 17.4.1.2 criteria

$f_{uta} = 106000\ psi$

$A_{seN} := 0.237in^2$ — Effective tensile stress area. ESR-1917

$N_{sa} := A_{seN} \cdot f_{uta} = 25122\ lbf$ — Steel strength, Eqn 17.4.1.2

$\phi_{1t} \cdot N_{sa} = 18841.5\ lbf$ — Design steel strength

$$DC_{1t} := \frac{\max(T_{U1}, T_{U2})}{\phi_{1t} \cdot N_{sa}} = 0.1$$

Demand/capacity ratio < 1.0, OK

Check Concrete Breakout Strength in Tension:
Section 17.4.2

$\phi_{2t} := 0.65$ — Strength reduction factor, Section 17.3.3 for Category 1 concrete failure modes without supplementary reinforcement (Condition B)

$A_{Nco} := 9 \cdot h_{ef}^2$ $\quad A_{Nco} = 272 \cdot in^2$ — Projected concrete failure area of single anchor Section 17.4.2.1, Eq. 17.4.2.1c

Determine controlling spacing values per Figure R17.4.2.1:

$$c_{a1b} := \begin{cases} (1.5 \cdot h_{ef}) & \text{if } c_{a1} > 1.5 \cdot h_{ef} \\ c_{a1} & \text{otherwise} \end{cases}$$

$$s_{1b} := \begin{cases} (3 \cdot h_{ef}) & \text{if } s_1 > 3 \cdot h_{ef} \\ s_1 & \text{otherwise} \end{cases}$$

$$c_{a1b} = 8.25 \cdot in$$

$$s_{1b} = 5 \cdot in$$

$$A_{Nc} := (c_{a1b} + s_{1b} + 1.5 \cdot h_{ef}) \cdot (2 \cdot 1.5 \cdot h_{ef})$$

$$A_{Nc} = 354.8 \cdot in^2$$

Projected concrete failure area of anchor group
Figure R17.4.2.1

Determine modification factors for concrete breakout equation:

$e_N := 0in$

Eccentricity of resultant tension force from anchor group centroid. Figure R17.4.2.4

$$\psi_{ecn} := \frac{1}{\left(1 + \frac{2 \cdot e_N}{3 \cdot h_{ef}}\right)} = 1$$

Eccentricity modification factor
Section 17.4.2.4, Eqn 17.4.2.4

$$\psi_{edN} := \begin{cases} 1 & \text{if } c_{a1b} \geq 1.5 \cdot h_{ef} \\ \left(\left(0.7 + 0.3 \cdot \frac{c_{a1b}}{1.5 \cdot h_{ef}}\right)\right) & \text{otherwise} \end{cases}$$

Edge modification factor
Section 17.4.2.5, Eq. 17.4.2.5a/17.4.2.5b

$\psi_{edN} = 1$

$\psi_{cN} := 1.0$

Crack formation modification factor for post-installed anchors, ESR-1917, Table 3

$\psi_{cpN} := 1.0$

Post-installed anchors modification factor
Section 17.4.2.7

$k_c := 17$

Factor for post installed anchors
ESR-1917, Table 3 and ACI 318-14 Section 17.4.2.2

$\lambda := 1.0$

Modification factor for normal weight concrete
Table 19.2.4.2

$\lambda_a := 1.0 \cdot \lambda = 1$

Modification factor for cast-in and undercut anchors in light weight concrete
Section 17.2.6

$f'_c := 3000psi$

Recall minimum compressive strength of concrete from Section 10.4.2

$$N_b := k_c \cdot \lambda_a \cdot \sqrt{f'_c \cdot \frac{1}{psi}} \cdot \left(\frac{h_{ef}}{in}\right)^{1.5} (lbf)$$

$N_b = 12010.29\ lbf$

Basic concrete breakout strength of a single anchor
Section 17.4.2.2, Eq. 17.4.2.2a/17.4.2.2b

$$N_{cbg} := \begin{cases} \frac{A_{Nc}}{A_{Nco}} \cdot \psi_{edN} \cdot \psi_{cN} \cdot \psi_{cpN} \cdot N_b & \text{if } n = 1 \\ \frac{A_{Nc}}{A_{Nco}} \cdot \psi_{ecn} \cdot \psi_{edN} \cdot \psi_{cN} \cdot \psi_{cpN} \cdot N_b & \text{otherwise} \end{cases}$$

$N_{cbg} = 15650\ \text{lbf}$ — Concrete breakout strength
Section 17.4.2.1, Eq. 17.4.2.1a/17.4.2.1b

$\phi_{2t} \cdot N_{cbg} = 10172\ \text{lbf}$ — Design concrete breakout strength

$DC_{2t} := \frac{T_{U1} + T_{U2}}{\phi_{2t} \cdot N_{cbg}} = 0.33$ — Demand/capacity ratio < 1.0, OK

Check Concrete Pullout Strength in Tension:

Per ESR-1917, Table 3, pullout strength does not control for 0.75" anchors embedded 4.75" or more

Check Side-Face Blowout:
Section 17.4.4

$\phi_{4t} := 0.65$ — Strength reduction factor, Section 17.3.3 for Category 1 concrete failure modes without supplementary reinforcement (Condition B)

Limits of applicability of side-face blowout:

Side-face blowout is only applicable if hef > 2.5ca1 for a single anchor, or if hef > 2.5ca1 and s < 6ca1 for an anchor group. Otherwise side-face blowout does not apply.

$h_{ef} = 5.5 \cdot \text{in}$ — Side face blowout does not apply

$2.5 \cdot c_{a1b} = 20.63 \cdot \text{in}$

Summary of tension demand/capacity results:

$DC_{1t} = 0.105$ Anchor steel capacity

$DC_{2t} = 0.33$ Concrete breakout

$DC_N := \max(DC_{1t}, DC_{2t}) = 0.33$ — Controlling limit state to use in interaction

Check Anchor Shear Capacity:
Section 17.5.1

$\phi_{1v} := 0.65$ — Strength reduction factor, Section 17.3.3 for a ductile steel anchor

Direct Shear:

$V_{UR} := \sqrt{V_{UZ}^2 + V_{UY}^2} = 397.8\ \text{lbf}$ — Maximum design shear per anchor

$f_{uta} = 106000\ \text{psi}$ — Recall futa from section above

$d_{ba} = 0.75 \cdot \text{in}$ — Recall headed stud diameter

$A_{seV} := A_{seN} = 0.237 \cdot \text{in}^2$ — Effective cross sectional area of stud

$V_{sa} := 13675\ \text{lbf}$ — Steel strength, ESR-1917, Table 3

$\phi_{1v} \cdot V_{sa} = 8889\ \text{lbf}$ — Design steel strength

$DC_{1v} := \dfrac{V_{UR}}{\phi_{1v} \cdot V_{sa}} = 0.045$ — Demand/capacity ratio < 1.0, OK

Check Concrete Breakout Strength in Shear:
Section 17.5.2

$\phi_{2v} := 0.65$ — Strength reduction factor, Section 17.3.3 for Category 1 concrete failure modes without supplementary reinforcement (Condition B)

$A_{Vco} := 4.5 \cdot c_{a1b}^2 \qquad A_{Vco} = 306 \cdot \text{in}^2$ — Projected concrete failure area of single anchor Section 17.5.2.1, Eq. 17.5.2.1c

$s_1 = 5 \cdot \text{in}$ — Recall spacing of anchors

$c_{a1} = 8.4 \cdot \text{in}$ — Recall edge spacing parallel to applied shear

$h_{a1} := \min\left(t_{wall}, 1.5c_{a1}\right) = 12.6 \cdot \text{in}$ — Determine controlling design thickness

$A_{Vc1} := 2 \cdot 1.5 \cdot c_{a1} \cdot h_{a1} = 317.5 \cdot in^2$ Controlling breakout area. Figure R17.5.2.1b

$d_{ba} = 0.75 \cdot in$ Recall anchor diameter

$l_e := 2 \cdot d_{ba} = 1.5 \cdot in$ Load bearing length of anchor in shear for for torque-controlled expansion anchors. Section 17.5.2.2

$\lambda_a := 1.0 \cdot \lambda = 1$ Recall modification factor for cast-in and undercut anchors in light weight concrete

$f'_c := 3000 psi$ Recall minimum compressive strength of concrete from Section 10.4.2

$$V_{b1} := 7 \cdot \left(\frac{l_e}{d_{ba}}\right)^{0.2} \cdot \sqrt{\frac{d_{ba}}{in}} \cdot \lambda_a \cdot \sqrt{\frac{f'_c}{psi}} \cdot \left(\frac{c_{a1}}{in}\right)^{1.5} lbf$$

Equation 17.5.2.2a. Vb per anchor

$$V_{b2} := 9 \cdot \lambda_a \cdot \sqrt{\frac{f'_c}{psi}} \cdot \left(\frac{c_{a1}}{in}\right)^{1.5} lbf$$

Equation 17.5.2.2b. Vb per anchor

$V_{bPlt1} := \min(V_{b1}, V_{b2}) = 9285.7 \cdot lbf$

$\psi_{edV} := 1.0$ Edge modification factor
Section 17.5.2.6

$\psi_{cV} := 1.0$ Cracked concrete modification factor
Section 17.5.2.7 for anchors in cracked concrete, assuming anchor is embedded between wall reinforcing grid

$$\psi_{hV} := \begin{cases} 1.0 & \text{if } h_{a1} \geq 1.5 \cdot c_{a1} \\ \sqrt{\dfrac{1.5 \cdot c_{a1}}{h_{a1}}} & \text{otherwise} \end{cases}$$

Concrete thickness modification factor
Section 17.5.2.8, Eq. 17.5.2.8

$\psi_{hV} = 1$

$$V_{cbg} := \frac{A_{Vc1}}{A_{Vco}} \cdot \psi_{edV} \cdot \psi_{cV} \cdot \psi_{hV} \cdot V_{bPlt1}$$

Concrete breakout strength
Section 17.5.2.1, Eq. 17.5.2.1a

$V_{cbg} = 9626 \cdot \text{lbf}$

$V_{UR} = 397.8\ \text{lbf}$

Recall design shear for anchor

$\phi_{2v} \cdot V_{cbg} = 6257\ \text{lbf}$

Design concrete breakout strength

$$DC_{2v} := \frac{V_{UR}}{\phi_{2v} \cdot 2V_{cbg}} = 0.032$$

Demand/capacity ratio < 1.0, OK

<u>Check concrete pryout strength in shear:</u>
Section 17.5.3

$\phi_{3v} := 0.65$

Strength reduction factor, Section 17.3.3 for Category 1 concrete failure modes without supplementary reinforcement (Condition B)

$$k_{cp} := \begin{cases} 1 & \text{if } h_{ef} < 2.5\text{in} \\ 2 & \text{otherwise} \end{cases}$$

$k_{cp} := 2.0$

Coefficient for pryout strength, Section 17.5.3.1

$N_{cbg} = 15650\ \text{lbf}$

Recall concrete breakout strength

$V_{cpg} := k_{cp} \cdot N_{cbg}$

Concrete pryout strength
Section 17.5.3.1, Eq. 17.5.3.1b

$\phi_{3v} \cdot V_{cpg} = 20345\ \text{lbf}$ Design concrete pryout strength

$DC_{3v} := \dfrac{V_{UR}}{\phi_{3v} \cdot V_{cpg}} = 0.02$ Demand/capacity ratio < 1.0, OK

Summary of shear demand/capacity results:

$DC_{1v} = 0.045$ Anchor steel capacity

$DC_{2v} = 0.032$ Concrete breakout

$DC_{3v} = 0.02$ Concrete pryout

$DC_V := \max\left(DC_{1v}, DC_{2v}, DC_{3v}\right) = 0.045$ Controlling limit state to use in interaction

<u>Check Interaction Equation per Section R17.6:</u>

$\zeta := \dfrac{5}{3}$ Interaction equation power.

$\left(DC_N\right)^{\zeta} + \left(DC_V\right)^{\zeta} = 0.16$ $\left(DC_N\right)^{\zeta} + \left(DC_V\right)^{\zeta} < 1.0$ Interaction OK.

Note that tension breakout demand capacity ratio controls over the interaction demand capacity ratio.

10.4.3 Plate Washer Design

The anchorage plates will incorporate 5/16"x3"x3" plate washers. 1-1/8" diameter holes in the anchor plates are used in conjunction with the 3/4" diameter anchors in order to provide sufficient installation clearance. A 3/4" hole with standard 1/16" oversize = 13/16" = 0.813". This is the diameter of the hole in the plate washer. This plate washer will be placed over the 1-1/8" hole in the anchor plate.

$D_w := 1.5in$ — Outside diameter of standard washer that will be used in conjuction with plate washer

$D_{id} := 0.813in$ — Diameter of hole in plate washer

$D_{ovs} := 1.125in$ — Diameter of hole in anchor plate

Ensure the washer plate has sufficient capacity to develop the ultimate tension capacity of the steel anchor.

$T_u := 25120lbf$ — Steel strength in tension from Table 3, ESR 1917. This is unreduced by φ.

The area of load application will be the area of the washer.

$$A_{washer} := \frac{\pi D_w^2}{4} - \frac{\pi D_{id}^2}{4} = 1.25 \cdot in^2$$

Theoretical area of washer

Because the methodology used to model the plate in RISA uses trapazoidal shapes, the actual area of plates within the washer area in RISA is $1.871in^2$. Use this area to determine the design pressure.

$$A_{washerRisa} := 1.87081 in^2$$

$$p_{design} := \frac{T_u}{A_{washerRisa}} = 13427.34 \text{ psi}$$

Use 13,428psi in RISA

Apply Tu to the plate and ensure that resulting stress is less than design yield strength = 0.9Fy

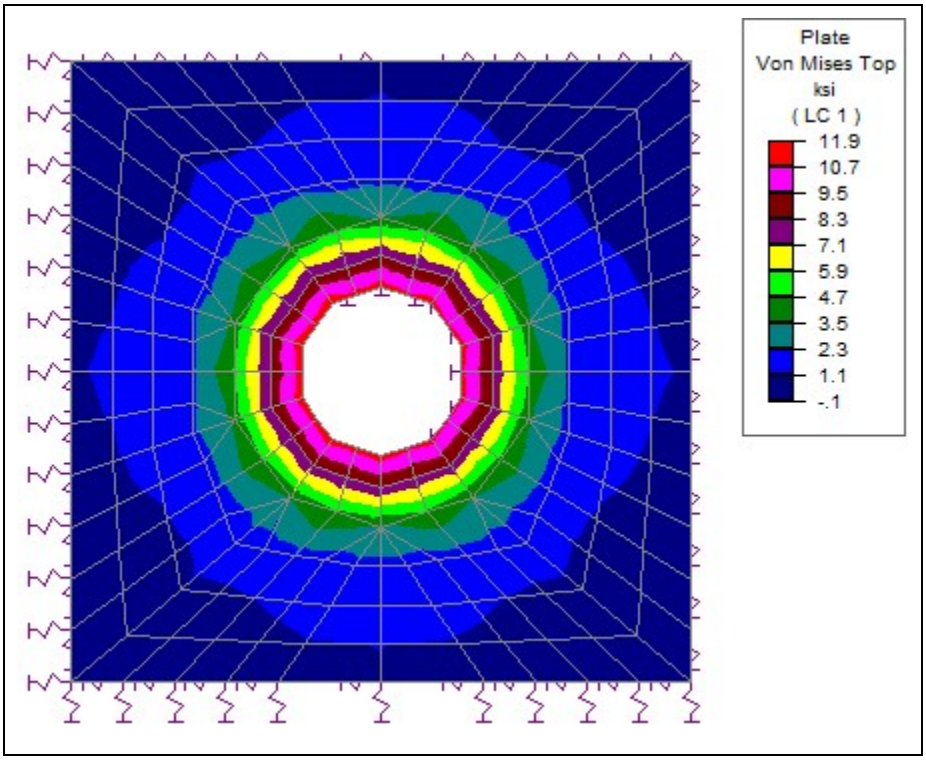

Figure 12. Washer Stress Under Max Anchor Tension

0.9(36ksi) = 32.4ksi > 10.3ksi. The washer plate has sufficient capacity for the applied loading

10.5 Wall Nozzle Lifting Device Assembly Analysis

10.5.1 Design of Lifting Bail Weld Analysis

The wall nozzle assemblies are balanced to enable hoisting from a single lifting bail. The counterweight assemblies utilize lifting bails (Item 15 and 16) shown on H-2-90161-070, *Standard Rigid Lifting Bails*, which are rated for 795lbs and 1,490lbs respectively. The lower capacity bails will be used to remove the counterweight assemblies after installation of the nozzles.

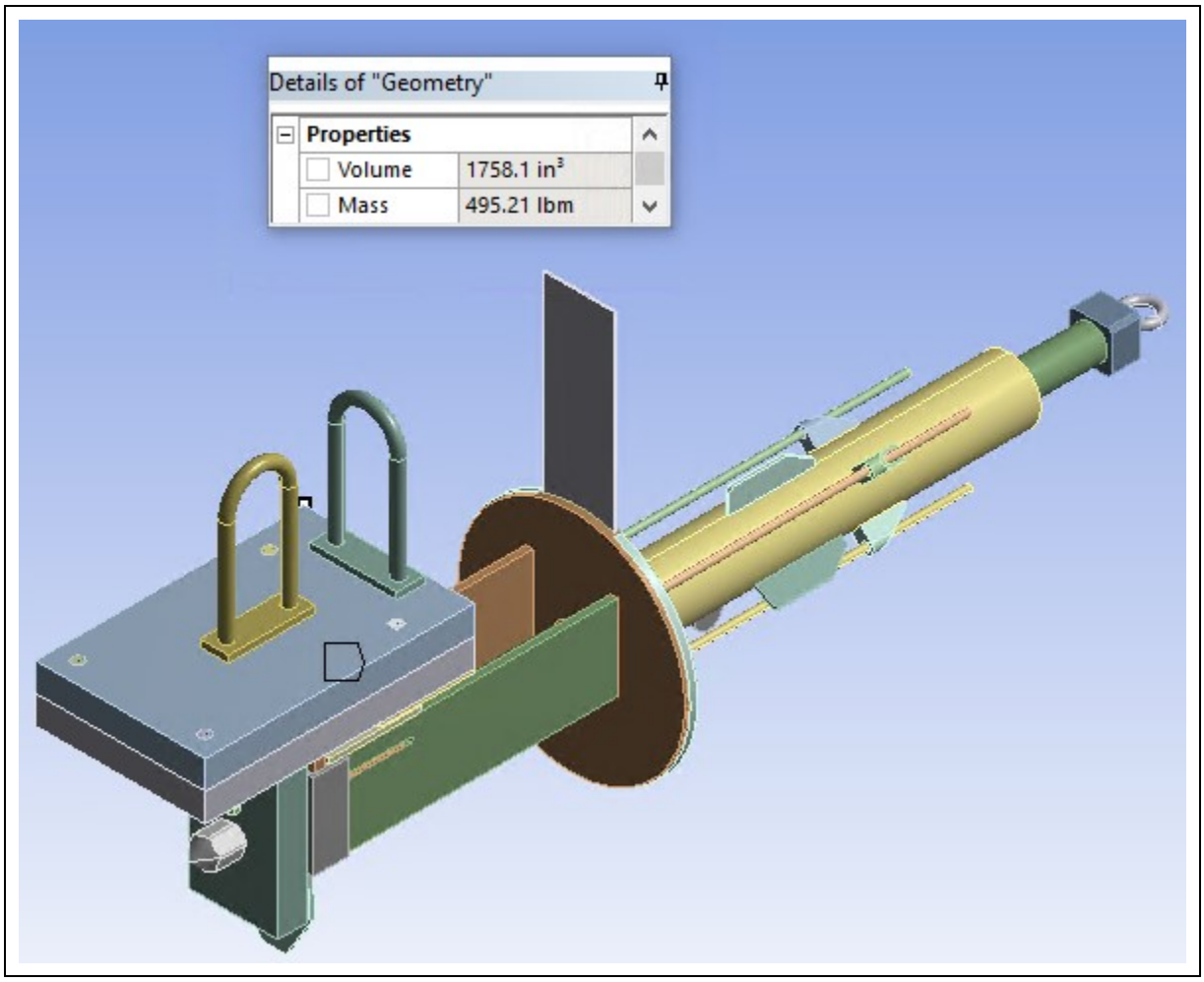

Figure 13. 2-Inch Wall Nozzle Assembly Weight

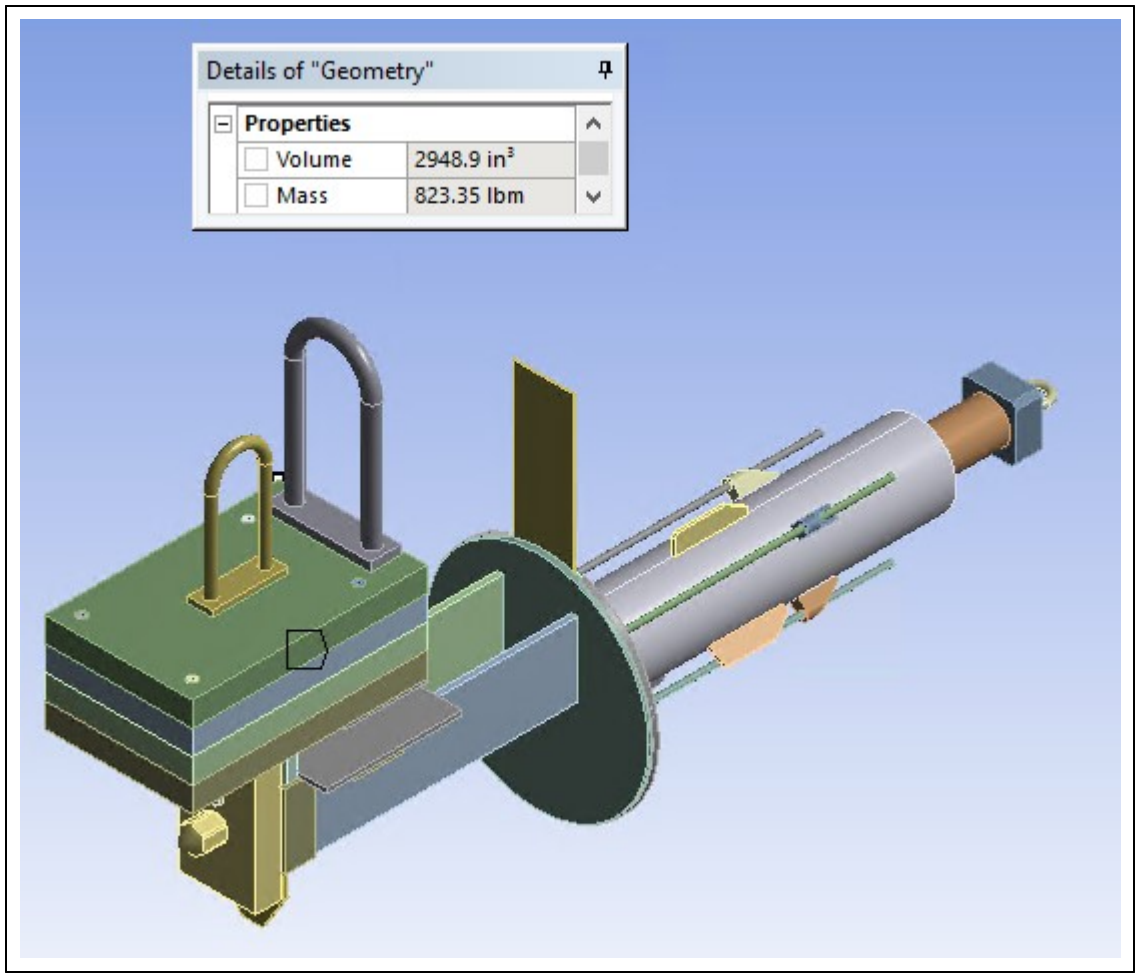

Figure 14. 3-Inch Wall Nozzle Assembly Weight

$W_2 := 496\,lbf$ — Design weight of entire 2" assembly, including counterweights

$W_3 := 824\,lbf$ — Design weight of entire 3" assembly, including counterweights

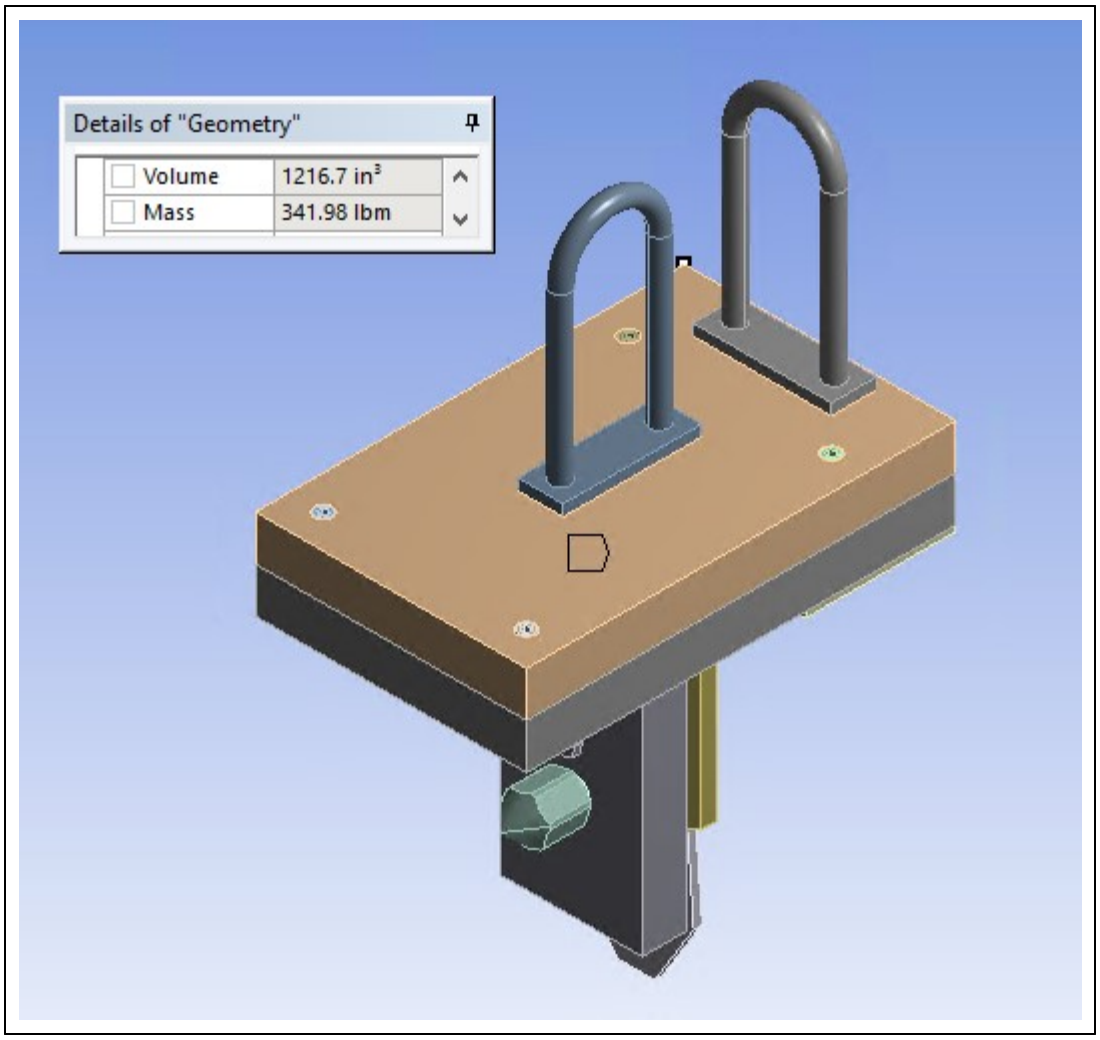

Figure 15. 2-Inch Wall Nozzle Counterweight Weight

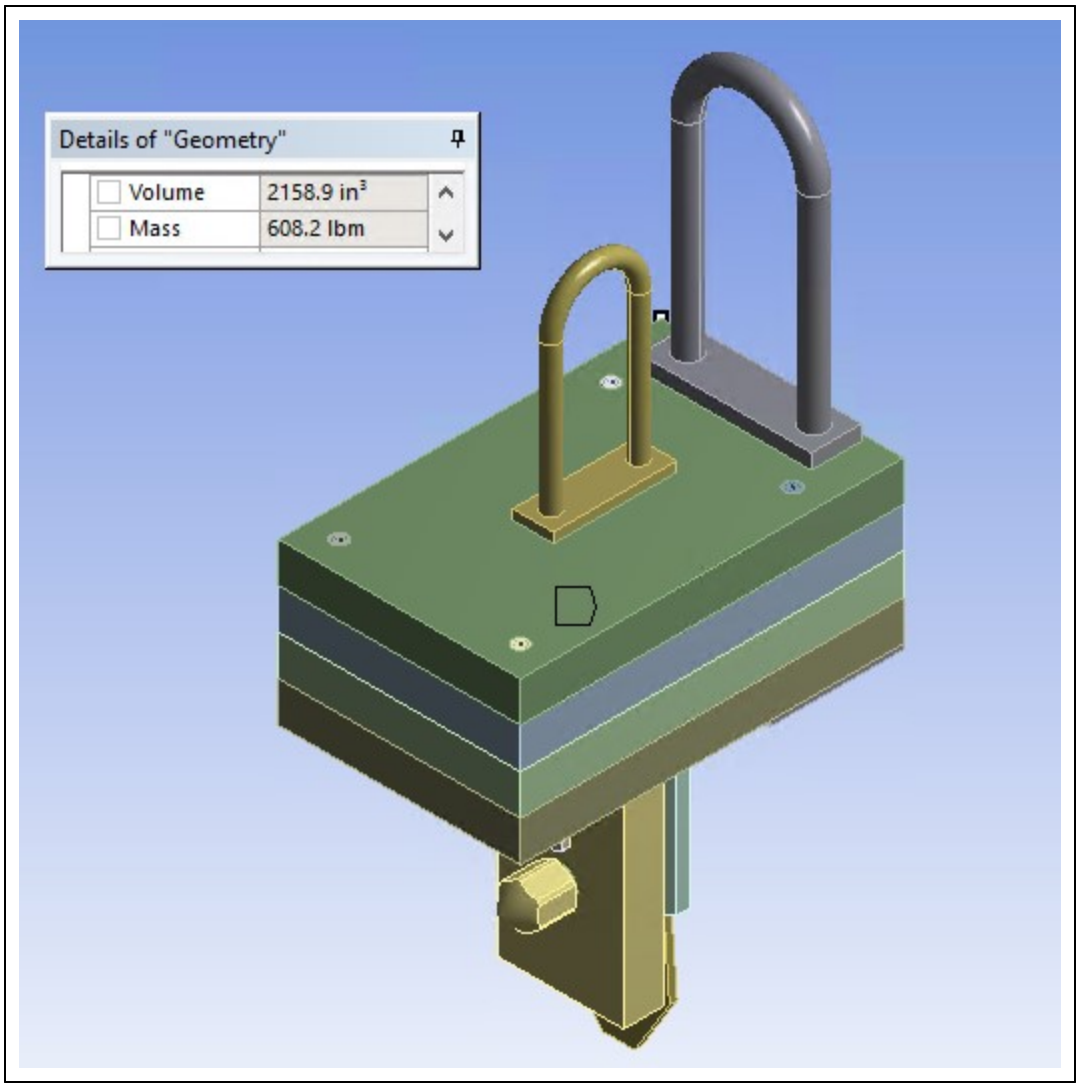

Figure 16. 3-Inch Wall Nozzle Counterweight Weight

$W_{CW2} := 342\,lbf$ — Design weight of 2" counterweight assembly

$W_{CW3} := 609\,lbf$ — Design weight of 3" counterweight assembly

$W_{NZL2} := W_2 - W_{CW2} = 154\ lbf$ — Design weight of 2" nozzle assembly with no counterweights

$W_{NZL3} := W_3 - W_{CW3} = 215\ lbf$ — Design weight of 3" nozzle assembly with no counterweights

10.5.2 Load Path Through Counterweight Assembly

The load path for the counterweight assembly is as follows for the hoisting configuration. All items reference H-14-111832:

- Tension is introduced into the bail to counterweight welds Items 62 and 67 welded to Item 53.
- Tension is then resisted by counterweight assembly screws, Items 59 and 61.
- Tension and moment are introduced into the welds connecting Items 26 and 28 to Item 29, which are part of assemblies 1 and 2.
- The attachment screw has shear and moment imparted to it due to the nozzle assembly cantilevering from it.

10.5.3 Bail to Counterweight Plate Welds

The lifting bail welded attachment is located at the wall nozzle assembly center of gravity by design. The bail is welded to the counterweight assembly all around the bail plate with a 3/16-inch fillet weld in accordance with AWS D1.1. The strength of the weld is governed by the weaker of the joined materials. Both the lifting bail plate and counter weight are fabricated from ASTM A36 steel. The weld is only stressed during installation and removal and is placed in pure tension. For conservatism, the weld requirement calculation for the lift bail is based on the rated capacity of the lift bail (1,490lbs) in lieu of the assembly weight. The length of weld required to install and remove the combined wall nozzle assembly is calculated as follows:

$t_w := \frac{3}{16}in$

Fillet weld size.
(See H-14-111832, Sheet 6, Details 1&2)

$A_{we} := 0.707 \cdot t_w = 0.13 \cdot in$

Size of fillet root

$F_{y\_A36} = 36 \cdot ksi$

Recall the Yield strength (A36), ASTM A36

$F_{EXX} := 60ksi$

Nominal strength of weld metal

$b_{weld} := 2in \qquad d_{weld} := 5.125in$

Dimensions of lift bail flat bar

$A_w := 2 \cdot b_{weld} + 2 \cdot d_{weld} = 14.25 \cdot in$

Area of weld (or length per Blodgett)

$N_d := 2$

Design factor for category (A) lifters.
(See ASME BTH-1, Section 3-1.3)

$F_{v\_min} := \min\left(\frac{0.6F_{EXX}}{1.2N_d}, 0.4 \cdot F_{y\_A36}, 0.3 \cdot F_{EXX}\right)$

Allowable weld stress is the lesser of 30% of the tensile strength of the filler metal or 40% of the yield strength of the base metal (AWS D1.1, Table 2.3. See ASME BTH-1, Section 3-3.4.1 for additional weld requirements)

$F_{v\_min} = 14.4 \cdot ksi$

$F_{max} := 1490 lbf$ — Use bail capacity as the design force for the welds

$R_{t\_w} := F_{max} = 1490\ lbf$ — Vertical reaction on weld.

$f_{w1} := \frac{R_{t\_w}}{A_w}$ $\quad f_{w1} = 105 \cdot \frac{lbf}{in}$ — Force on weld

$DCR_w := \frac{f_{w1}}{F_{v\_min} \cdot A_{we}} = 0.05$ — Demand/capacity ratio < 1.0, OK

The 2" and 3" lifting bail attachment is adequate for installation and removal, and the stresses on the weld will remain within AWS D1.1 code allowable stress and BTH-1 requirements. Once the wall nozzle is installed and secured, the counter weight is remotely disconnected and removed by the second lifting bail (H-2-90161, Item 15). The individual counterweights are approximately 371-lbs for 2" nozzle assembly and 594-lbs for the 3" nozzle assembly.

10.5.4 Check Counterweight Assembly Screws

1/2" Diameter F835 socket head cap screws (Items 59 and 61, H-14-111832) have a tensile strength of 145ksi. Using AISC 14th methodology the tension capacity of each screw is as follows:

$Hst_3 := W_3 = 824\ lbf$ — Controlling demand. The entire weight of the assembly is tributary to this connection

$a_b := \frac{\pi \cdot (0.5in)^2}{4} = 0.196 \cdot in^2$ — Nominal area of screw

$R_n := 0.75 \cdot 145ksi \cdot a_b = 21.35 \cdot kip$ — Nominal tension strength of screw, AISC EQN J3-1

$\Omega_t := 2$ — Factor of safety for tension, AISC Section J.6

$\frac{R_n}{\Omega_t} = 10676.51\ lbf$ — Capacity of a single screw

$DCR := \frac{Hst_3}{4\left(\frac{R_n}{\Omega_t}\right)} = 0.02$ — Demand/capacity ratio < 1.0, OK

10.5.5 Design of Vertical Counterweight Welds to Horizontal Counterweights

$Hst_3 := W_3 = 824$ lbf

Controlling demand. While the entire weight of the assembly is not tributary to this connection, design welds for this vertical force.

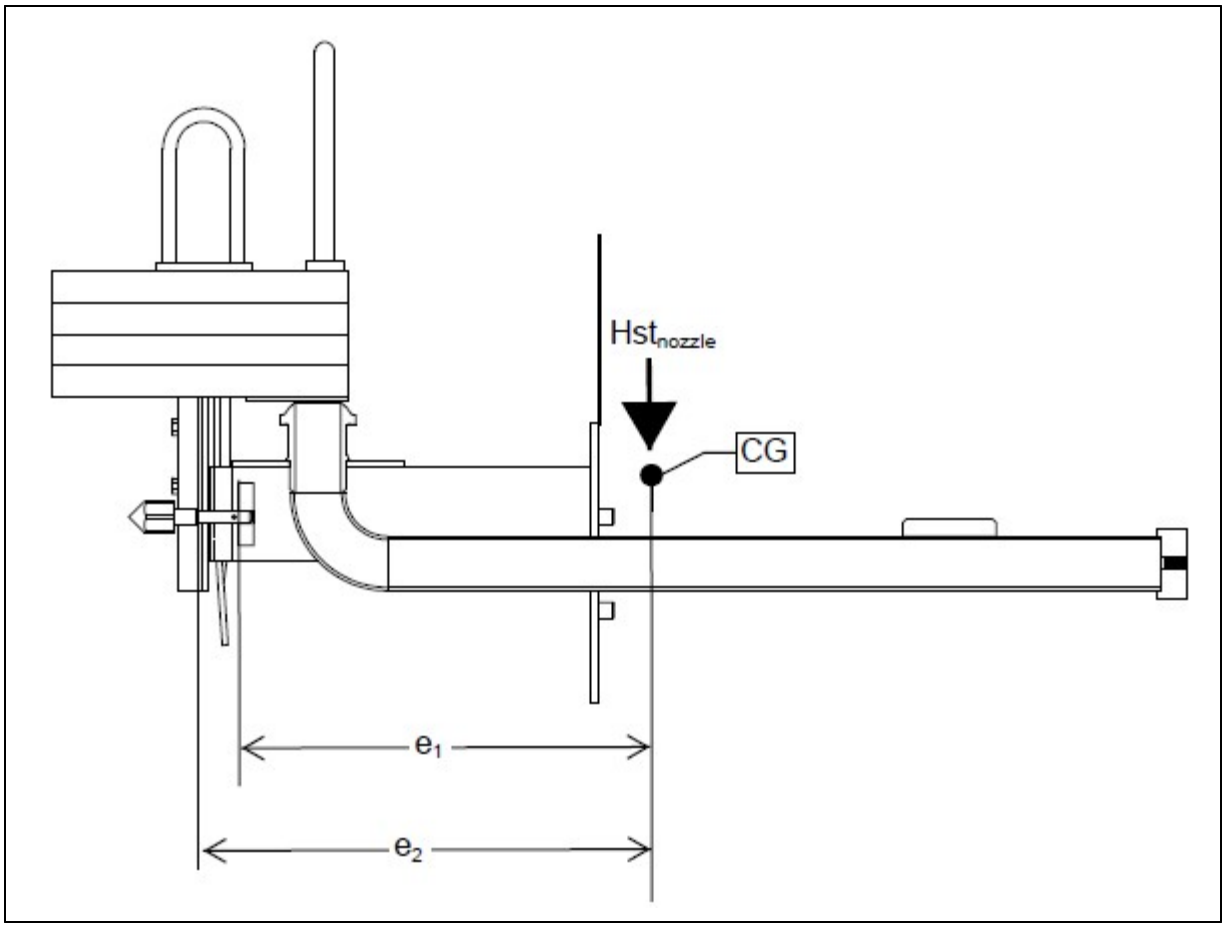

Figure 17. 3-Inch Wall Nozzle Assembly CG, No Counterweight

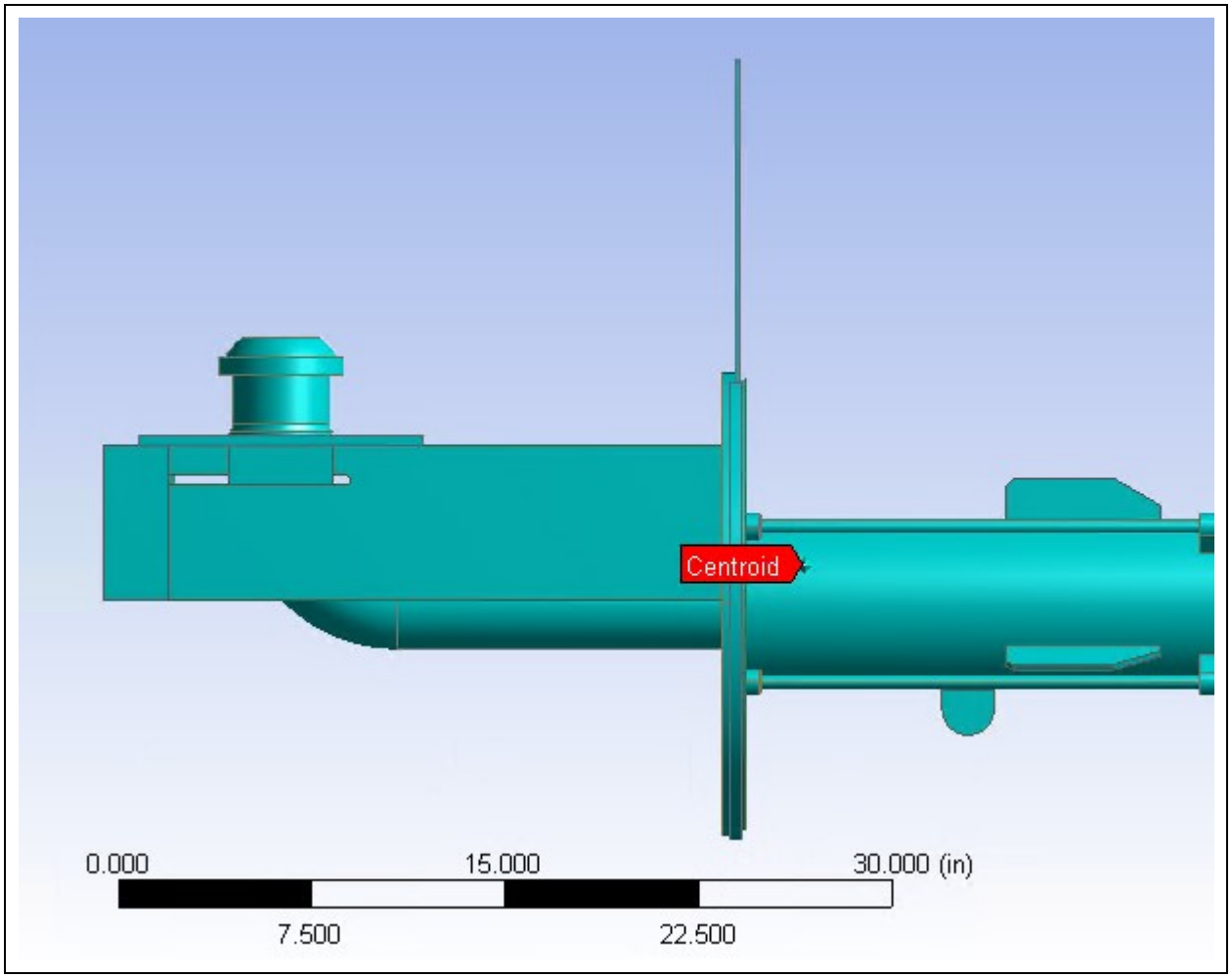

Figure 18. 3-Inch Wall Nozzle Assembly CG Location

$e_1 := 26.25in$ — Distance from CG to the center of Plate 8, Item 19.

$e_2 := 29in$ — Distance from CG to the center of weld group.

$Hst_{nozzle} := W_{NZL3} = 215\ lbf$ — Design weight of the nozzle assembly without the counterweights. This is the force that will contribute to the moment imparted into the weld group.

$M_{hst} := e_2 \cdot Hst_{nozzle} = 6235 \cdot lbf \cdot in$ — Applied moment to weld group

Weld of vertical counterweight plates to horizontal counterweight plate		Counterweight Welds
		242A Nozzle Welds
Reference Drawing:	H-14-111832	
Reference Detail/Sheet:	Details 1 and 2, Sheet 6	
Item Numbers:	Items 26 and 28 to Item 29	

Weld Group Diagram

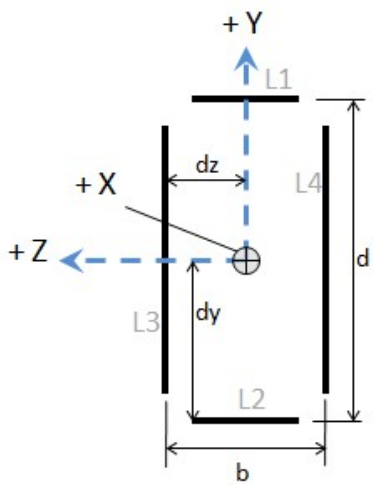

L3 = L4 =	6.25	in
b =	3.375	in
L1 = L2 =	1.5	in
d =	6.25	in

Determine Weld Group CG location

$d_y = d/2$ 3.13 in

$d_z = b/2$ 1.69 in

Determine mass properties of weld group

Line	Length (in)	I_{yo} (in^3)	I_{zo} (in^3)	About Z-Axis $L(d_y)^2$	About Y-Axis $L(d_z)^2$	$I_z = I_{zo} + L(d_y)^2$ (in^3)	$I_y = I_{yo} + L(d_z)^2$ (in^3)
L1	1.50	0.281	0.000	14.648	0.000	14.648	0.281
L2	1.50	0.281	0.000	14.648	0.000	14.648	0.281
L3	6.25	0.000	20.345	0.000	17.798	20.345	17.798
L4	6.25	0.000	20.345	0.000	17.798	20.345	17.798
					Total	69.987	36.158
A_w=	15.50 in				I_p =	106.145	in^3

Determine resultant stress on weld group

Input from RISA						*Highlighted Cells are Input Cells*			
Applied Loads transposed as necessary to align with weld group coordinate system			**Member**	**From Direction**	**Section**	**Demand** (lb/in)	**Basis**	**Influenced Direction**	**Resultant Demand, SRSS** (lb/in)
Px=	824	lbs.	NA	x	NA	53.2	Px/Aw	NA	
Py=	0	lbs.	NA	y	NA	0.0	Py/Aw	NA	
Pz=	0	lbs.	NA	z	NA	0.0	Pz/Aw	NA	
Mx_y=	0	in-lbs.	NA	mx	NA	0.0	Mx*dz/Ip	NA	**344.1**
Mx_z=	0	in-lbs.	NA	mx	NA	0.0	Mx*dy/Ip	NA	
My=	6235	in-lbs.	NA	my	NA	291.0	My*dz/Iy	NA	
Mz=	0	in-lbs.	NA	mz	NA	0.0	Mz*dy/Iz	NA	

Check Welds Using BTH-1, Section 3-3.4 "Welded Connections" Requirements

$F_{EXX} := 60ksi$ — Nominal strength of weld metal

$t_w := \frac{1}{8}in$ — Fillet weld size.
(See H-14-111832, Details 1&2)

$A_{we} := 0.707 \cdot t_w = 0.088 \cdot in$ — Size of fillet root

$F_v := \frac{0.6F_{EXX}}{1.2N_d} = 15 \cdot ksi$ — Allowable weld stress.
(See ASME BTH-1, Section 3-3.4.1)

$R_w := A_{we} \cdot F_v = 1325.63 \cdot \frac{lbf}{in}$ — Capacity of weld per inch

$f_{vw} := 344.1 \frac{lbf}{in}$ — Demand on weld from above

$DCR_w := \frac{f_{vw}}{F_v \cdot A_{we}} = 0.26$ — Demand/capacity ratio < 1.0, OK

10.5.6 Wall Nozzle Attachment Pin Shear Capacity

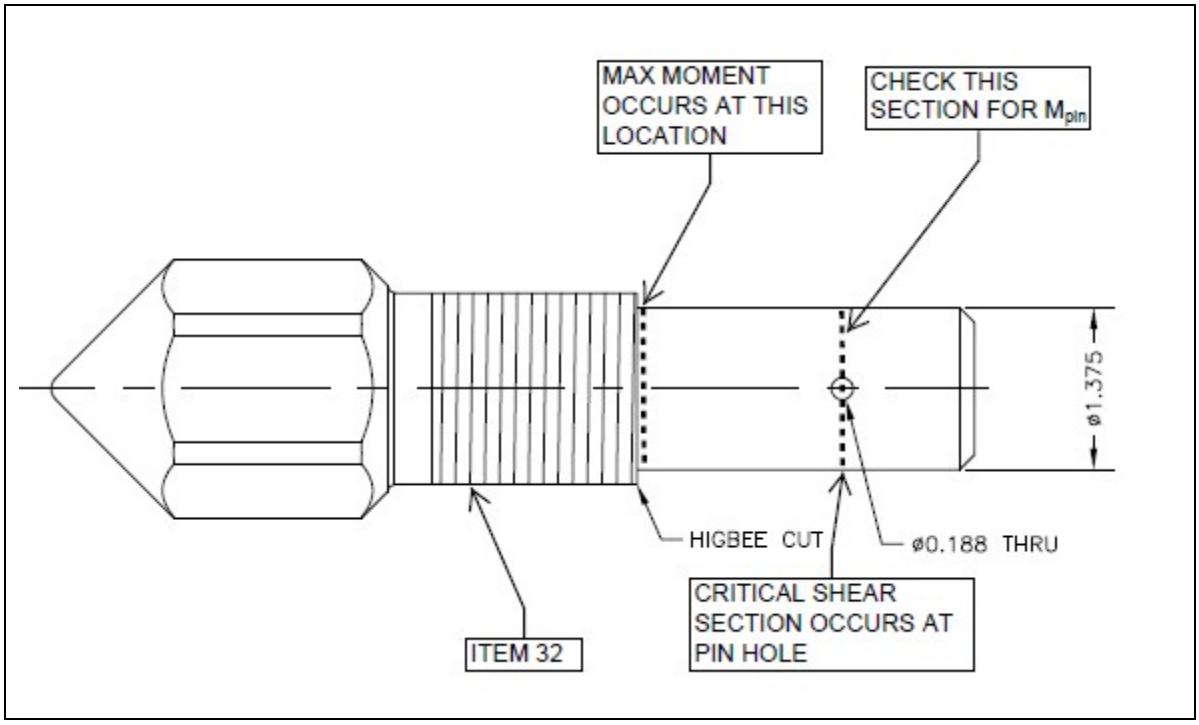

Figure 19. Attachment Pin (H-14-111832, Item 32)

During installation, the wall nozzle weldment will place a shear load on the attachment pin shank. This will result in a bending moment being applied at the base of the pin, at the threaded section. Additionally, the wall nozzle weldment will apply a force couple on the end of the pin, resulting in the application of a point moment on the end of the pin. This moment will be combined with the bending moment due to the applied shear load in order to adequately qualify the pin for all applied loading. The force couple is based on the distance from the wall nozzle weldment CG to the back of plate 8 (Item 19).

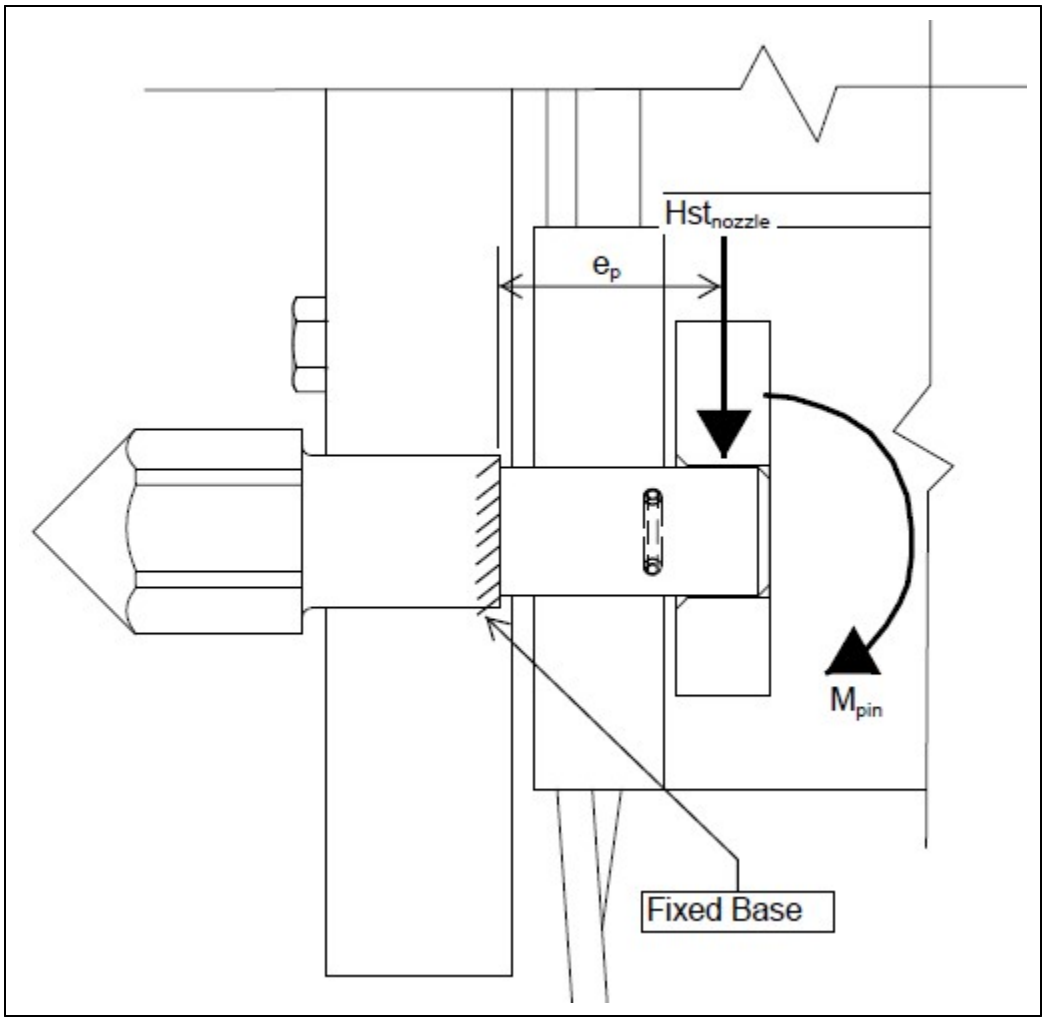

Figure 20. Attachment Pin Loading

$Hst_{nozzle} = 215\ lbf$ — Recall design weight of the nozzle assembly without the counterweights.

$N_d := 2$ — Design factor for category (A) lifters. (See ASME BTH-1, Section 3-1.3)

$P_{vpin} := Hst_{nozzle} = 215\ lbf$ — Design weight for hoisting operations

$D_{pin} := 1.375in$ — Minimum pin shank diameter

$D_{rollpin} := 0.188in$ — Diameter of roll-pin hole

$r := \frac{D_{pin}}{2} = 0.688 \cdot in$ — Radius of pin

$F_{y\_A572\_50} := 50ksi$ Recall the Yield strength (A572), ASTM A572

$F_{u\_A572\_50} := 65ksi$ Recall the Ultimate tensile strength (A572), ASTM A572

Shear Check:

$A_{pin} := \frac{\pi}{4} \cdot D_{pin}^2 - D_{rollpin} \cdot D_{pin} = 1.23 \cdot in^2$ Cross-sectional area of pin reduced for roll-pin drill out (conservative)

$f_v := \frac{P_{vpin}}{A_{pin}} = 175.3\,psi$ Max shear stress on pin

$h := 4in$ Height of Plate 8, Item 19

$t := 1in$ Thickness of Plate 8, Item 19

$\frac{h}{t} = 4 \qquad 2.45 \cdot \sqrt{\frac{29000ksi}{F_{y\_A572\_50}}} = 59$ $\frac{h}{t} \le 2.45\sqrt{\frac{E}{F_y}}$ Therefore, use EQN 3-28

$F_v := \frac{F_{y\_A572\_50}}{N_d \cdot \sqrt{3}} = 14434\,psi$ Allowable shear stress on pins. EQN 3-28

$DCR_{vpin} := \frac{f_v}{F_v} = 0.01$ Demand/capacity ratio < 1.0, OK

Bending Check at Roll-Pin Hole:

Use parallel axis theorem to calculation section modulus of pin at roll-pin hole. Diagram below is taken from Roark's Formulas, Table A.1, Case 19.

19. Segment of solid circle (*Note:* If $\alpha \leqslant \pi/4$, use expressions from case 20)

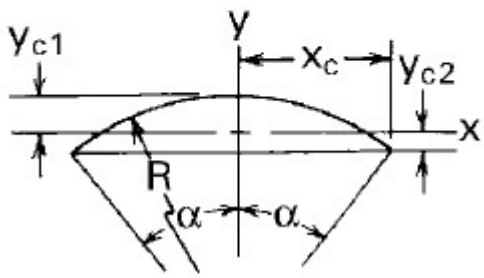

$$\theta_r := \frac{(\pi \cdot r - D_{rollpin})}{r} = 2.868 \cdot rad$$

$$\alpha_r := \frac{\theta_r}{2} = 1.43 \cdot rad$$

$$A_{seg} := r^2 \cdot (\alpha_r - \sin(\alpha_r) \cdot \cos(\alpha_r))$$

$$A_{seg} = 0.614 \cdot in^2$$

$$y_{c1} := r \cdot \left[1 - \frac{2 \cdot \sin(\alpha_r)^3}{3 \cdot (\alpha_r - \sin(\alpha_r) \cdot \cos(\alpha_r))}\right]$$

$y_{c1} = 0.34 \cdot in$ Distance from edge of pin to centroid of segment

$$y_{c2} := r \cdot \left[\frac{2 \cdot \sin(\alpha_r)^3}{3(\alpha_r - \sin(\alpha_r) \cdot \cos(\alpha_r))} - \cos(\alpha_r)\right]$$

$y_{c2} = 0.25 \cdot in$ Distance from edge of roll-pin hole to centroid of segment

$$I_x := \frac{r^4}{4} \cdot \left[\alpha_r - \sin(\alpha_r) \cdot \cos(\alpha_r) + 2 \cdot \sin(\alpha_r)^3 \cdot \cos(\alpha_r) - \frac{16 \cdot \sin(\alpha_r)^6}{9 \cdot (\alpha_r - \sin(\alpha_r) \cdot \cos(\alpha_r))}\right]$$

$I_x = 0.015 \cdot in^4$ Moment of inertia of segment about it's centroid

$d := r - y_{c1} = 0.34 \cdot in$

Distance from center of pin hole to segment centroid

$I_{xtr} := I_x + A_{seg} \cdot d^2 = 0.087 \cdot in^4$

Transformed moment of inertia of a single segment about pin centroid

$I_{xtotal} := 2 \cdot I_{xtr} = 0.175 \cdot in^4$

Total transformed moment of inertia of the pin with roll-pin hole accounted for

$$I_y := \frac{r^4}{12} \cdot \left(3\alpha_r - 3\sin(\alpha_r) \cdot \cos(\alpha_r) - 2\sin(\alpha_r)^3 \cdot \cos(\alpha_r)\right)$$

$I_y = 0.07 \cdot in^4$

Moment of inertia of a single segment about it's centroid

$I_{ytotal} := 2 \cdot I_y = 0.14 \cdot in^4$

$x_c := r \cdot \sin(\alpha_r) = 0.68 \cdot in$

Distance from center axis to extreme fiber for bending about the y axis

$S_{pinx} := \frac{I_{xtotal}}{r} = 0.254 \cdot in^3$

Elastic modulus of pin shank about the x axis (roll-pin horizontal), accounting for roll-pin hole

$S_{piny} := \frac{I_{ytotal}}{x_c} = 0.2 \cdot in^3$

Elastic modulus of pin shank about the y axis (roll-pin vertical), accounting for roll-pin hole

$S_{pin} := \min(S_{pinx}, S_{piny}) = 0.2 \cdot in^3$

Section modulus to use in design, this will envelope any orientation of the roll-pin

$e_1 := 26.5in$

Eccentricity from centroid of nozzle assembly to back face of plate 8 (Item 19)

$M_{pin} := Hst_{nozzle} \cdot e_1 = 5697.5 \cdot lbf \cdot in$

Maximum applied moment to pin at the roll-pin hole

$f_b := \frac{M_{pin}}{S_{pin}} = 28693.95\ psi$ Max bending stress on pin

$F_b := \frac{1.25 \cdot F_{y\_A572\_50}}{N_d} = 31250\ psi$ Allowable bending stress on pin. EQN 3-25

$DCR_{vpin} := \frac{f_b}{F_b} = 0.918$ Demand/capacity ratio < 1.0, OK

Bending Check at Edge of Higbee Cut on Pin:

$e_p := 2.39in$ Eccentricity from edge of Higbee cut to center of Plate 8 (Item 19)

$M_{max} := P_{vpin} \cdot e_p + M_{pin} = 6211.35 \cdot lbf \cdot in$ Maximum applied moment to pin

$S_{pin} := \frac{\pi \cdot D_{pin}^3}{32} = 0.255 \cdot in^3$ Elastic modulus of pin shank

$f_b := \frac{M_{max}}{S_{pin}} = 24337.61\ psi$ Max bending stress on pin

$F_b := \frac{1.25 \cdot F_{y\_A572\_50}}{N_d} = 31250\ psi$ Allowable bending stress on pin. EQN 3-25

$DCR_{vpin} := \frac{f_b}{F_b} = 0.78$ Demand/capacity ratio < 1.0, OK

Attachment 1:

RISA-3D Pump Room Wall Model

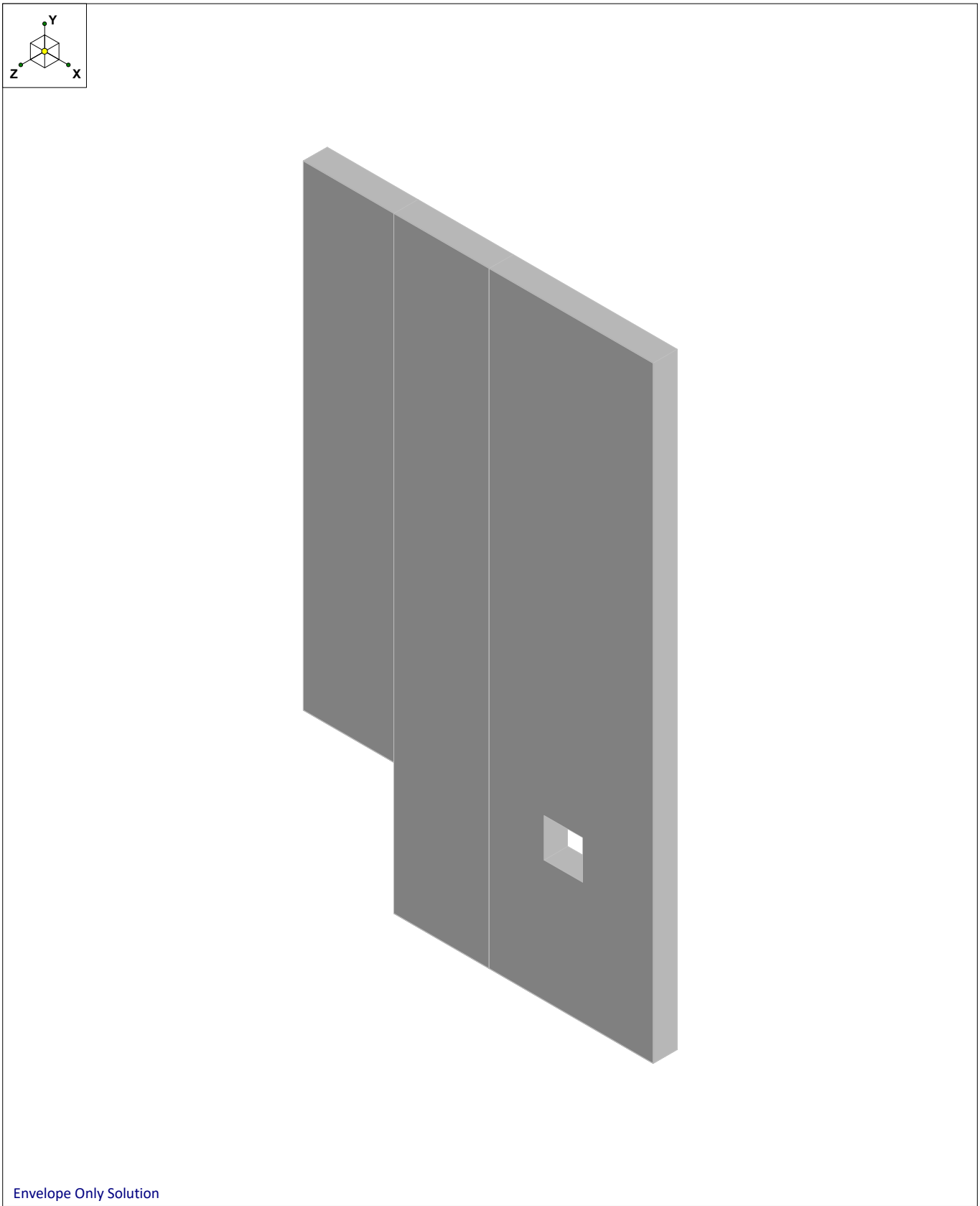

CEES	242A Pump Room Wall Penetrations Wall Panel Model in RISA	
JDY		
		242A Evaporator Wall 20190827.r3d

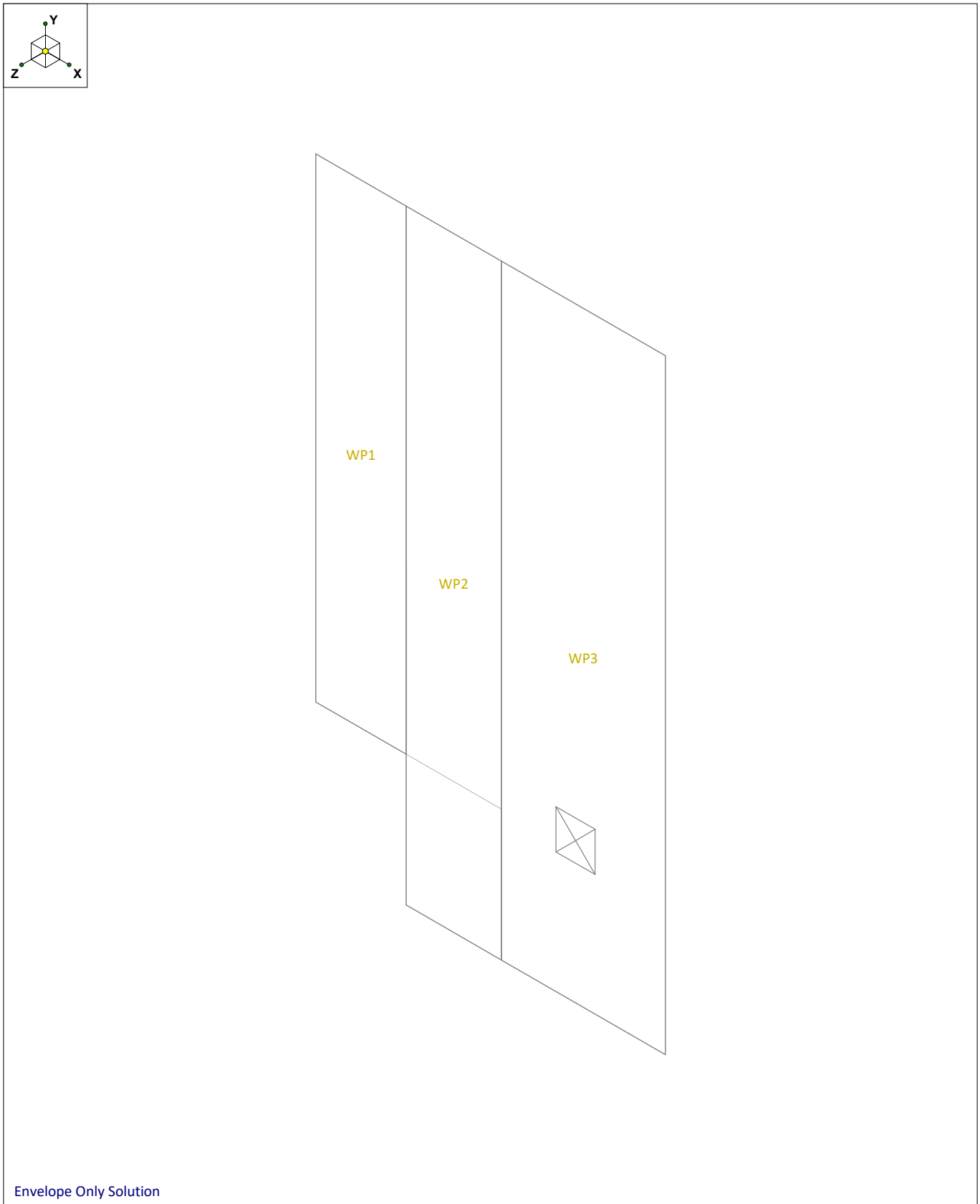

CEES	242A Pump Room Wall Penetrations	
JDY		
		242A Evaporator Wall 20190827.r3d

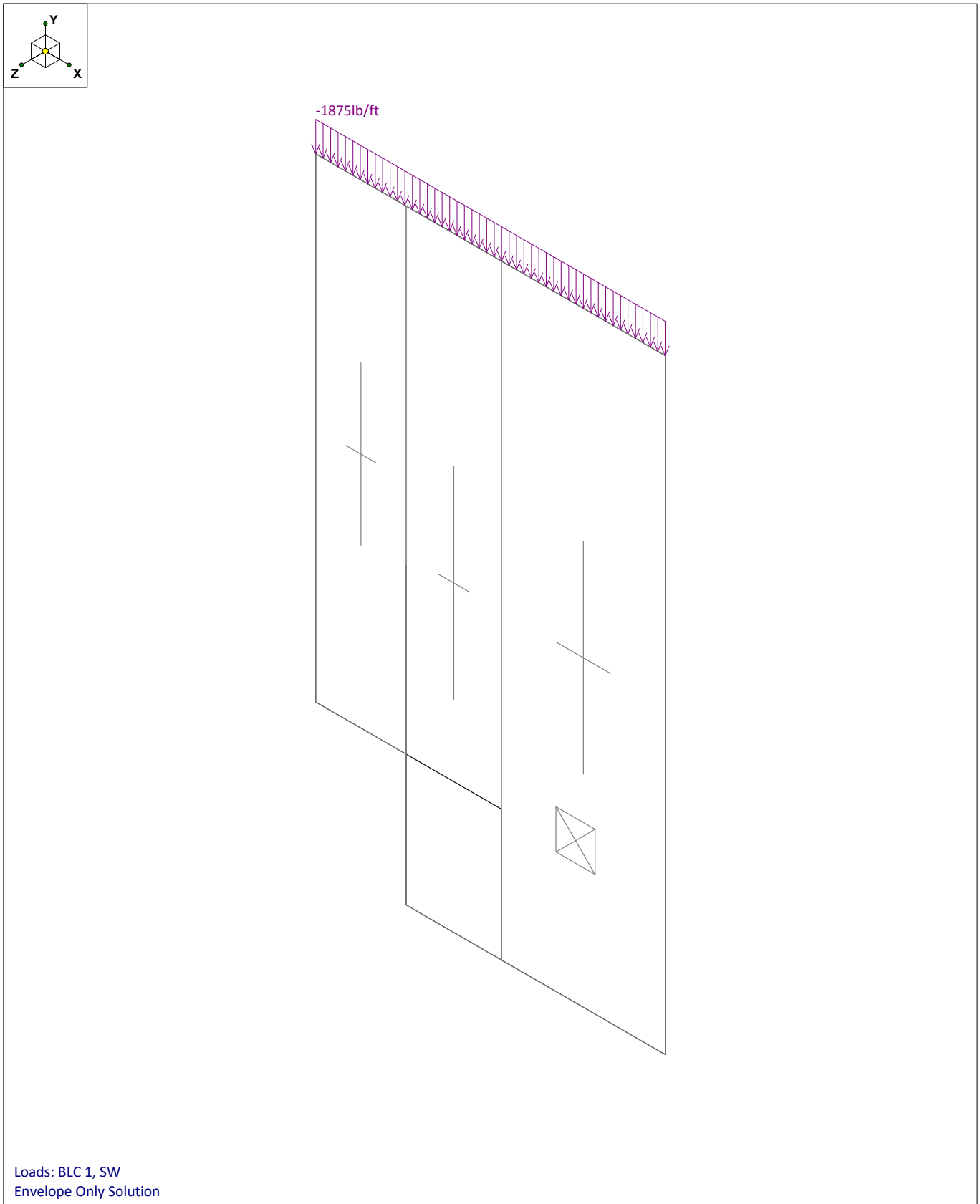

CEES	242A Pump Room Wall Penetrations	
JDY		
		242A Evaporator Wall 20190827.r3d

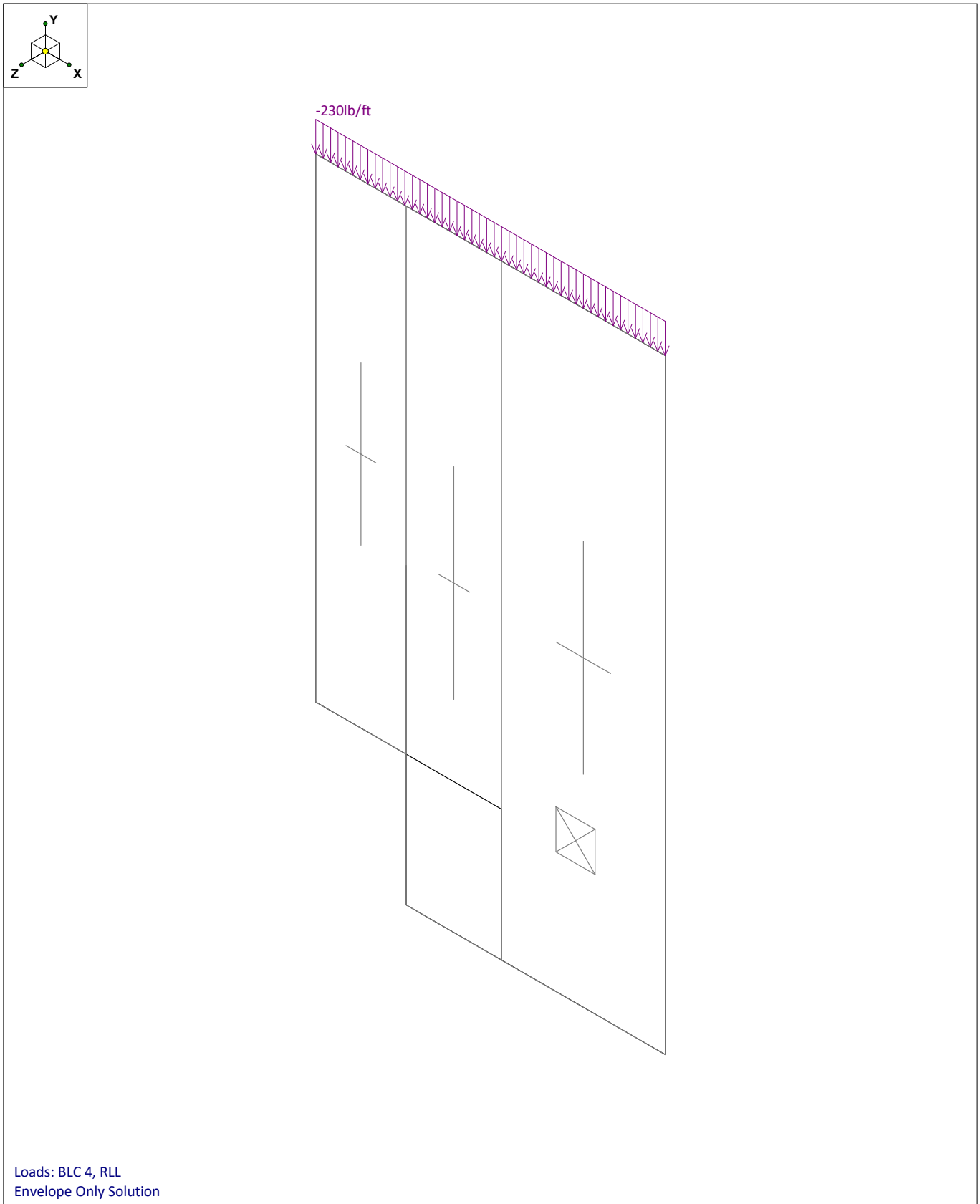

CEES	242A Pump Room Wall Penetrations	
JDY		
		242A Evaporator Wall 20190827.r3d

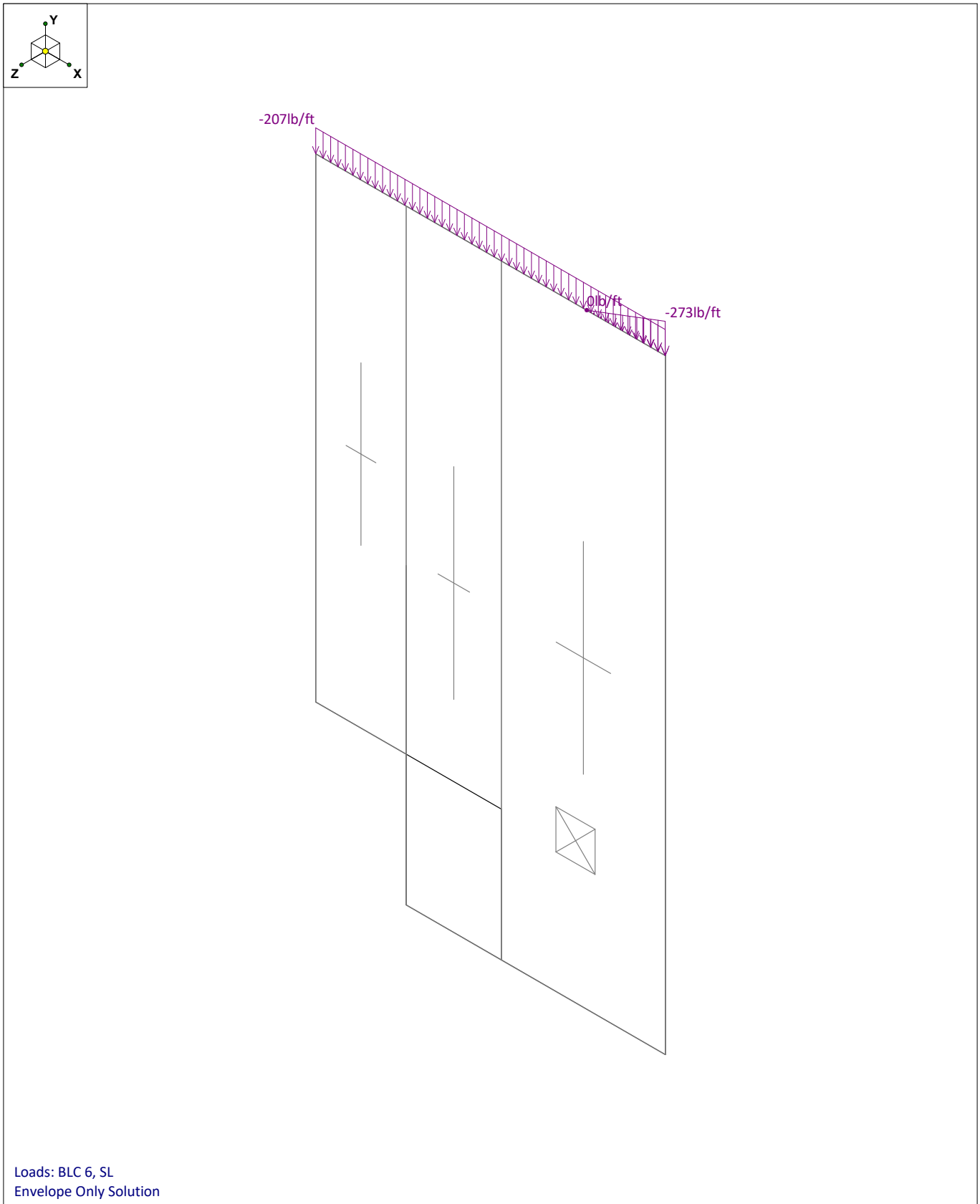

CEES	242A Pump Room Wall Penetrations	
JDY		
		242A Evaporator Wall 20190827.r3d

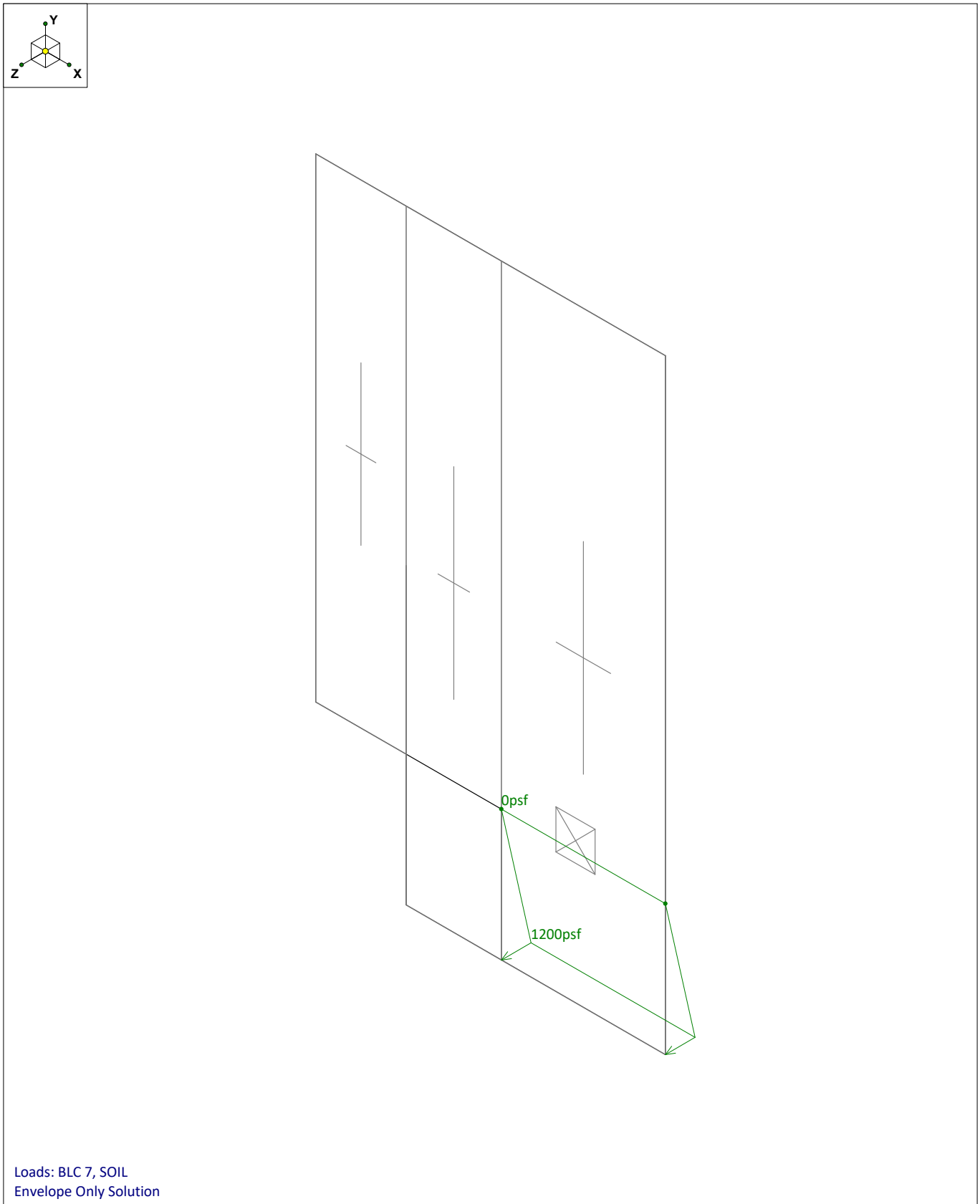

Loads: BLC 7, SOIL
Envelope Only Solution

CEES	242A Pump Room Wall Penetrations	
JDY		
		242A Evaporator Wall 20190827.r3d

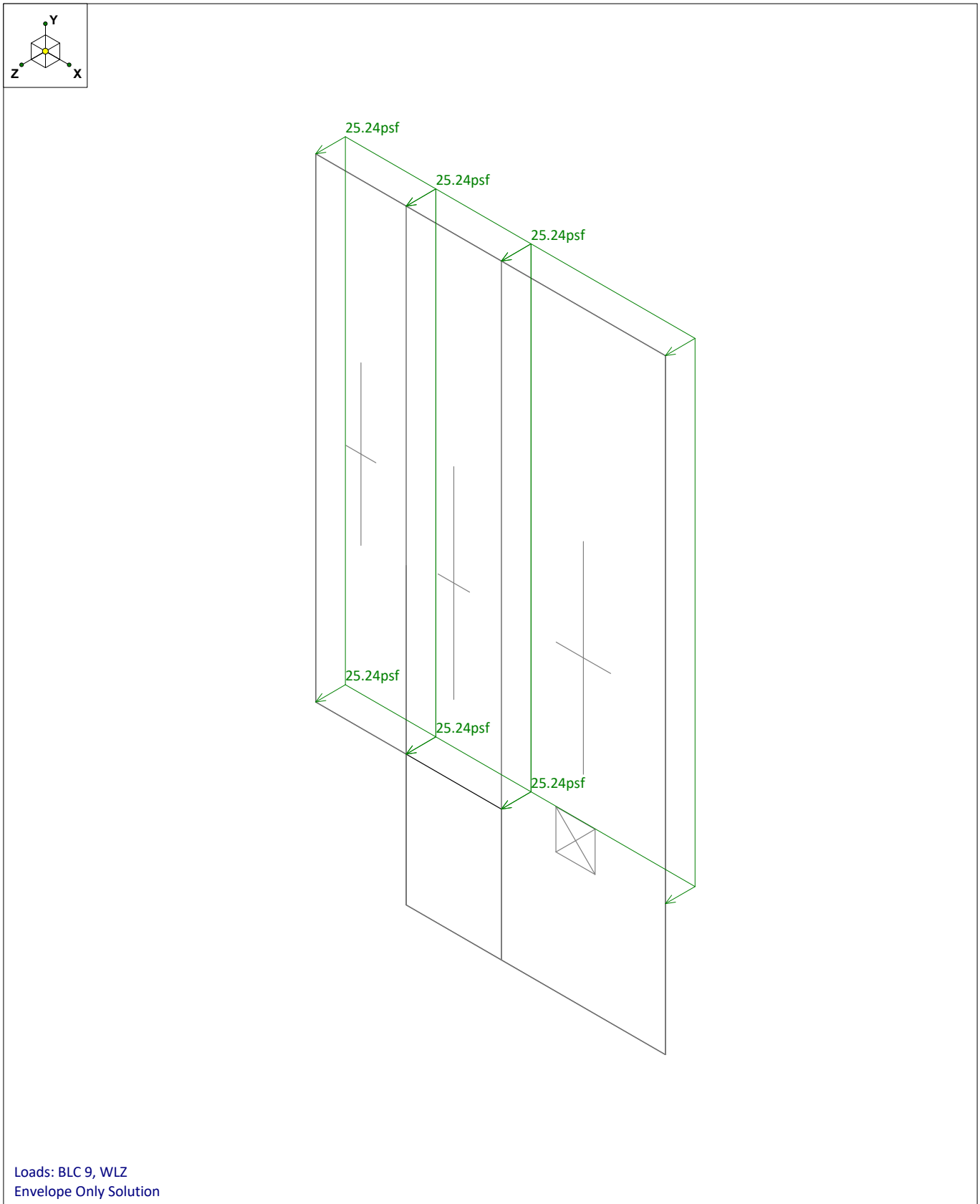

Loads: BLC 9, WLZ
Envelope Only Solution

CEES	242A Pump Room Wall Penetrations	
JDY		
		242A Evaporator Wall 20190827.r3d

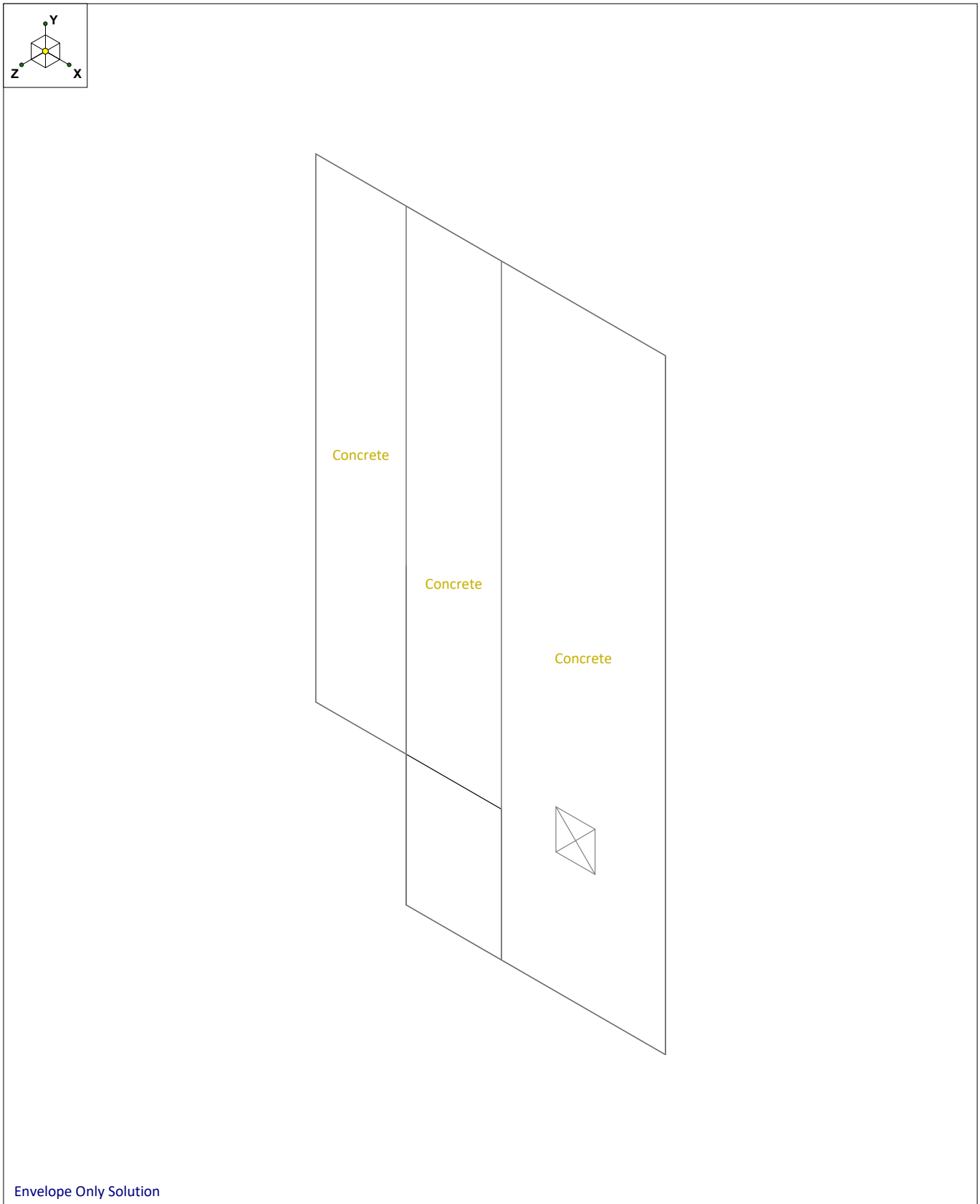

CEES	242A Pump Room Wall Penetrations	
JDY		
		242A Evaporator Wall 20190827.r3d

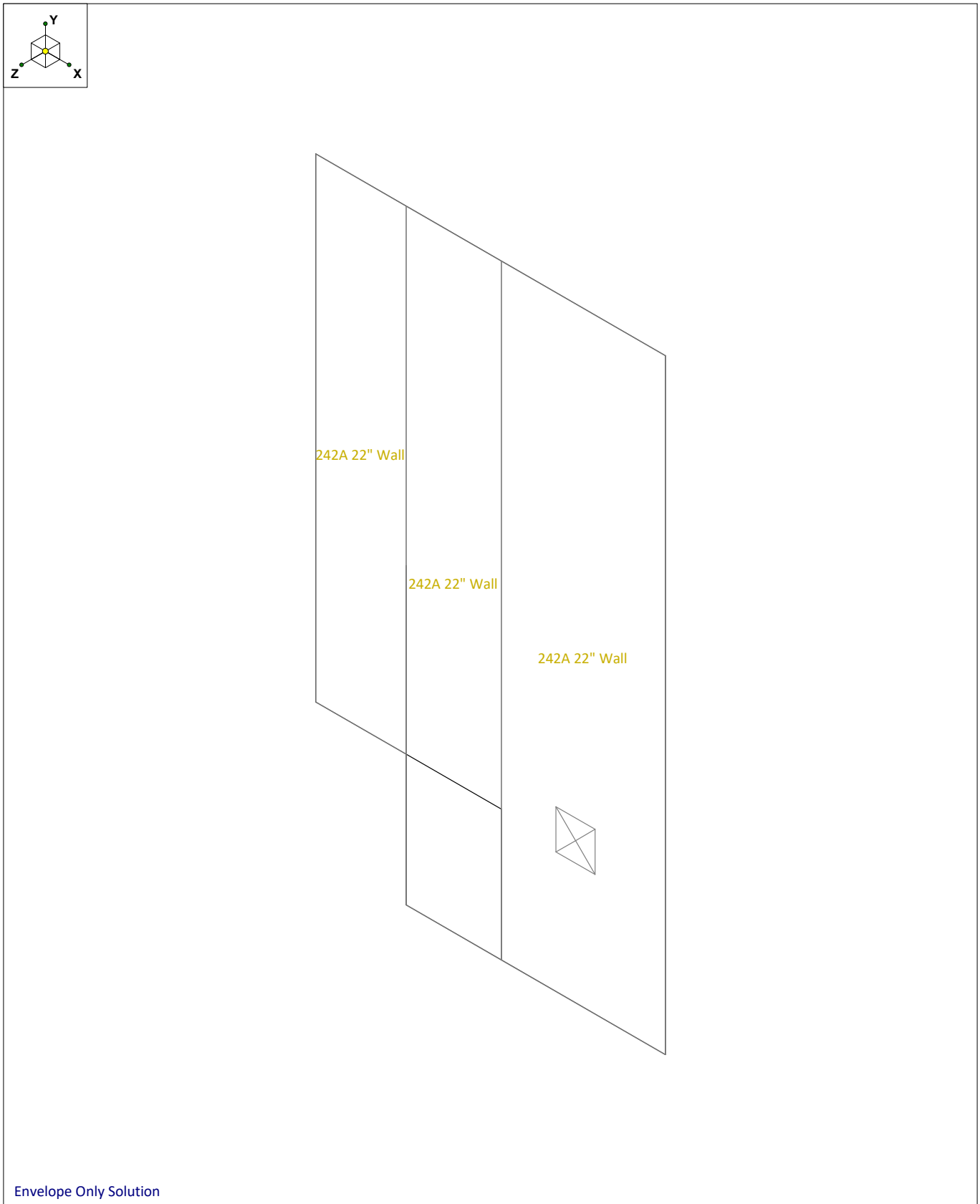

CEES	242A Pump Room Wall Penetrations	
JDY		
		242A Evaporator Wall 20190827.r3d

Company : CEES
Designer : JDY
Job Number :
Model Name : 242A Pump Room Wall Penetrations WP1

Checked By: RDL

CRITERIA		MATERIALS			GEOMETRY		
Code	: ACI 318-14	Material Set	: Conc3000NW		Total Height	: 436	in
Design Rule	: 242A 22" Wall	Concrete f'c	: 3000	ksi	Total Length	: 83	in
Seismic Rule	: None	Concrete E	: 3156	ksi	Thickness	: 22	in
Loc of r/f	: Each Face	Concrete G	: 1372	ksi			
Outer Bars	: Horizontal	Conc Density	: 145	lb/ft^3	Int Cover (-z)	: 2	in
		Lambda	: 1		Ext Cover (+z)	: 2	in
Vert Bar Size	: #5	Conc Str Blk	: Rectangular		Cover Open/Edge	2	in
Horz Bar Size	: #5				K	: 1	
		Vert Bar Fy	: 60000	ksi	Use Cracked?	: Yes	
Transfer In?	: No	Horz Bar Fy	: 60000	ksi	In Icr Factor	: .35	
Transfer Out?	: No	Steel E	: 29000	ksi	Out Icr Factor	: .35	
Group Wall?	: No						

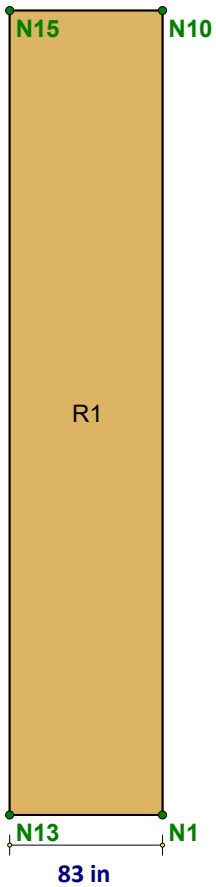

REGION RESULTS

Region	UC Max In Plane	LC	UC Shear In Plane	LC	Delta Max In Plane(in)	LC	UC Max Out Plane	LC	UC Shear Out Plane	LC	Delta Max Out Plane(in)	LC
R1	.064	1	.086	1	N/A	N/A	.048	7	.02	7	N/A	N/A

Company : CEES
Designer : JDY
Job Number :
Model Name : 242A Pump Room Wall Penetrations WP1

Checked By: RDL

REINFORCEMENT RESULTS

Region	Vertical Reinforcement	Horizontal Reinforcement	Diagonal Reinforcement
R1	#5@12in oc e.f.	#5@12in oc e.f.	

Company : CEES
Designer : JDY
Job Number :
Model Name : 242A Pump Room Wall Penetrations WP2

Checked By: RDL

CRITERIA		MATERIALS			GEOMETRY		
Code	: ACI 318-14	Material Set	: Conc3000NW		Total Height	: 556	in
Design Rule	: 242A 22" Wall	Concrete f'c	: 3000	ksi	Total Length	: 87.5	in
Seismic Rule	: None	Concrete E	: 3156	ksi	Thickness	: 22	in
Loc of r/f	: Each Face	Concrete G	: 1372	ksi			
Outer Bars	: Horizontal	Conc Density	: 145	lb/ft^3	Int Cover (-z)	: 2	in
		Lambda	: 1		Ext Cover (+z)	: 2	in
Vert Bar Size	: #5	Conc Str Blk	: Rectangular		Cover Open/Edge	2	in
Horz Bar Size	: #5				K	: 1	
		Vert Bar Fy	: 60000	ksi	Use Cracked?	: Yes	
Transfer In?	: No	Horz Bar Fy	: 60000	ksi	In Icr Factor	: .35	
Transfer Out?	: No	Steel E	: 29000	ksi	Out Icr Factor	: .35	
Group Wall?	: No						

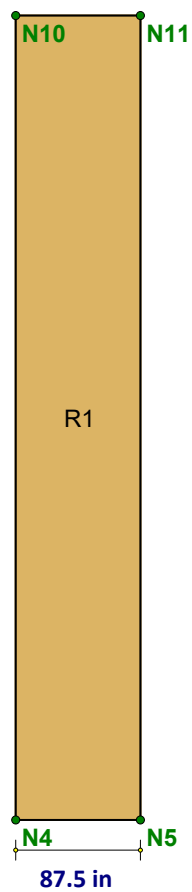

REGION RESULTS

Region	UC Max In Plane	LC	UC Shear In Plane	LC	Delta Max In Plane(in)	LC	UC Max Out Plane	LC	UC Shear Out Plane	LC	Delta Max Out Plane(in)	LC
R1	.029	1	.05	1	N/A	N/A	.052	7	.054	7	N/A	N/A

Company : CEES
Designer : JDY
Job Number :
Model Name : 242A Pump Room Wall Penetrations WP2

Checked By: RDL

REINFORCEMENT RESULTS

Region	Vertical Reinforcement	Horizontal Reinforcement	Diagonal Reinforcement
R1	#5@12in oc e.f.	#5@12in oc e.f.	

Company : CEES
Designer : JDY
Job Number :
Model Name : 242A Pump Room Wall Penetrations WP3

Checked By: RDL

CRITERIA

Code	:	ACI 318-14
Design Rule	:	242A 22" Wall
Seismic Rule	:	None
Loc of r/f	:	Each Face
Outer Bars	:	Horizontal
Vert Bar Size	:	#5
Horz Bar Size	:	#5
Transfer In?	:	No
Transfer Out?	:	No
Group Wall?	:	No

MATERIALS

Material Set	:	Conc3000NW	
Concrete f'c	:	3000	ksi
Concrete E	:	3156	ksi
Concrete G	:	1372	ksi
Conc Density	:	145	lb/ft^3
Lambda	:	1	
Conc Str Blk	:	Rectangular	
Vert Bar Fy	:	60000	ksi
Horz Bar Fy	:	60000	ksi
Steel E	:	29000	ksi

GEOMETRY

Total Height	:	556	in
Total Length	:	150.5	in
Thickness	:	22	in
Int Cover (-z)	:	2	in
Ext Cover (+z)	:	2	in
Cover Open/Edge		2	in
K	:	1	
Use Cracked?	:	Yes	
In Icr Factor	:	.35	
Out Icr Factor	:	.35	

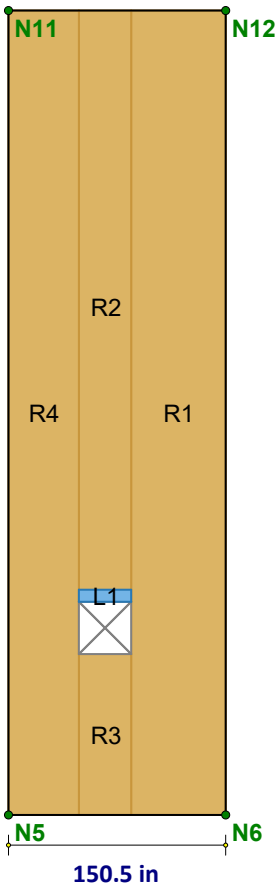

REGION RESULTS

Region	UC Max In Plane	LC	UC Shear In Plane	LC	Delta Max In Plane(in)	LC	UC Max Out Plane	LC	UC Shear Out Plane	LC	Delta Max Out Plane(in)	LC
R1	.024	1	.094	1	N/A	N/A	.191	7	.257	7	N/A	N/A
R2	.012	1	.057	1	N/A	N/A	.037	7	.034	7	N/A	N/A
R3	.004	1	.004	1	N/A	N/A	.345	5	.39	7	N/A	N/A
R4	.01	1	.031	1	N/A	N/A	.056	7	.051	7	N/A	N/A

Company : CEES
Designer : JDY
Job Number :
Model Name : 242A Pump Room Wall Penetrations WP3

Checked By: RDL

REINFORCEMENT RESULTS

Region	Vertical Reinforcement	Horizontal Reinforcement	Diagonal Reinforcement
R1	#5@12in oc e.f.	#5@12in oc e.f.	
R2	#5@12in oc e.f.	#5@12in oc e.f.	
R3	#5@12in oc e.f.	#5@12in oc e.f.	
R4	#5@12in oc e.f.	#5@12in oc e.f.	

Columbia Energy AND ENVIRONMENTAL SERVICES

Company : CEES
Designer : JDY
Job Number :
Model Name : 242A Pump Room Wall Penetrations

Checked By: RDL

Concrete Properties

	Label	E [ksi]	G [ksi]	Nu	Therm (\1E...	Density[lb/ft^3]	f'c[psi]	Lambda	Flex Steel[p...	Shear Steel...
1	Conc3000NW	3156	1372	.15	.6	145	3000	1	60000	60000
2	Conc3500NW	3409	1482	.15	.6	145	3500	1	60000	60000
3	Conc4000NW	3644	1584	.15	.6	145	4000	1	60000	60000
4	Conc3000LW	2085	907	.15	.6	109.999	3000	.75	60000	60000
5	Conc3500LW	2252	979	.15	.6	109.999	3500	.75	60000	60000
6	Conc4000LW	2408	1047	.15	.6	109.999	4000	.75	60000	60000

Wall Panel U.C. Parameters

	Label	Max Bending Chk	Max Shear Chk
1	Typical	1	1
2	242A 22" Wall	1	1

Concrete Wall Panel Rebar Parameters

	Label	Vert Bar Size	Max Vert Bar ...	Min Vert Bar ...	Vert Bar In...	Horz Bar Si...	Max Horz Bar...	Min Horz Bar ...	Horz Bar In...	Group Wall
1	Typical	#6	18	4	2	#4	18	4	2	
2	242A 22" ...	#5	12	12	2	#5	12	12	2	

Concrete Wall Panel Cover Parameters

	Label	Outer Bars	Location	Int Cover -z[in]	Ext Cover +z[in]	Edge Cover[in]	Transfer In	Transfer Out
1	Typical	Vertical	Each Face	2	2	2		
2	242A 22" Wall	Horizontal	Each Face	2	2	2		

Wall Panel Data

	Label	A Joint	B Joint	C Joint	D Joint	Material Type	Material Set	Thickness[i...	Design Rule	Panel/Spacing
1	WP1	N13	N15	N10	N1	Concrete	Conc3000NW	22	242A 22" Wall	N/A
2	WP2	N4	N10	N11	N5	Concrete	Conc3000NW	22	242A 22" Wall	N/A
3	WP3	N5	N11	N12	N6	Concrete	Conc3000NW	22	242A 22" Wall	N/A

Wall Panel Advanced Data

	Label	Seismic Rule	Design Method	SSAF	In-plane Icr Factor	Out-plane Icr Factor	K	Cm In-pl...	Cm Out-...	Inactive
1	WP1	None	N/A	N/A	.35	.35				
2	WP2	None	N/A	N/A	.35	.35				
3	WP3	None	N/A	N/A	.35	.35				

Member Distributed Loads (BLC 1 : SW)

	Member Label	Direction	Start Magnitude[lb/ft,F,psf]	End Magnitude[lb/ft,F,psf]	Start Location[in,%]	End Location[in,%]
1	M1	Y	-1875	-1875	0	0

Columbia Energy AND ENVIRONMENTAL SERVICES

Company : CEES
Designer : JDY
Job Number :
Model Name : 242A Pump Room Wall Penetrations

Checked By: RDL

Member Distributed Loads (BLC 4 : RLL)

	Member Label	Direction	Start Magnitude[lb/ft,F,psf]	End Magnitude[lb/ft,F,psf]	Start Location[in,%]	End Location[in,%]
1	M1	Y	-230	-230	0	0

Member Distributed Loads (BLC 6 : SL)

	Member Label	Direction	Start Magnitude[lb/ft,F,psf]	End Magnitude[lb/ft,F,psf]	Start Location[in,%]	End Location[in,%]
1	M1	Y	-207	-207	0	0
2	M1	Y	0	-273	249	321

Wall Panel Surface Loads (BLC 7 : SOIL)

	Wall Panel Label	Direction	Top Magnitude[psf,F]	Bottom Magnitude[psf,F]	Start Location[in]	Height[in]
1	WP3	Z	0	1200	0	120

Wall Panel Surface Loads (BLC 9 : WLZ)

	Wall Panel Label	Direction	Top Magnitude[psf,F]	Bottom Magnitude[psf,F]	Start Location[in]	Height[in]
1	WP1	Z	25.24	25.24	0	0
2	WP2	Z	25.24	25.24	120	556
3	WP3	Z	25.24	25.24	120	556

Basic Load Cases

	BLC Description	Category	X Gravity	Y Gravity	Z Gravity	Joint	Point	Distrib...	Area(M...	Surface(Plat...
1	SW	DL		-1				1		
2	SDL	DL								
4	RLL	RLL						1		
5	LL	LL								
6	SL	SL						2		
7	SOIL	HL								1
9	WLZ	WLZ								3
11	ELY	ELY		-.12						
12	ELZ	ELZ			.42					

Load Combinations

	Description	Sol...	P...	S...	BLC	Fa...	BLC	Fac...	BLC	Fac...	BLC	Factor	BLC	Factor	BLC	Fac...	BLC	Fac...	BLC	Fa...	BLC	Fa...	BLC	Fac...
1	IBC 16-1	Yes	Y		DL	1.4																		
2	IBC 16-2	Yes	Y		DL	1.2	HL	1.6	RLL	.5														
3	IBC 16-3	Yes	Y		DL	1.2	RLL	1.6	HL	1.6	WLZ	.5												
4	IBC 16-4	Yes	Y		DL	1.2	WLZ	1	HL	1.6	RLL	.5												
5	IBC 16-5	Yes	Y		DL	1.2	ELY	1	ELZ	1	HL	1.6	SL	.2										
6	IBC 16-6	Yes	Y		DL	.9	WLZ	1	HL	1.6														
7	IBC 16-7	Yes	Y		DL	.9	ELY	-1	ELZ	1	HL	1.6												

Columbia Energy AND ENVIRONMENTAL SERVICES

Company : CEES
Designer : JDY
Job Number :
Model Name : 242A Pump Room Wall Penetrations

Checked By: RDL

Wall Panel ACI 318-14: Concrete Code Checks (Out Plane)

	Wall Panel	Region	Max UC	LC	Shear UC	LC	Pn*phi[lb/ft]	Mn*phi[k-ft/in]	Vn*phi[lb/ft]
1	WP1	R1	.048 (Int)	7	.02	7	NC	2.42	18854.841
2	WP2	R1	.052 (Ext)	7	.054	7	NC	2.61	18879.903
3	WP3	R1	.191 (Int)	7	.257	7	NC	2.653	18837.421
4		R2	.037 (Ext)	7	.034	7	NC	2.393	18850.283
5		R3	.345 (Int)	5	.39	7	NC	2.393	18853.553
6		R4	.056 (Ext)	7	.051	7	NC	2.302	18822.162

Attachment 2:

RISA-3D Nozzle Assembly and Anchorage

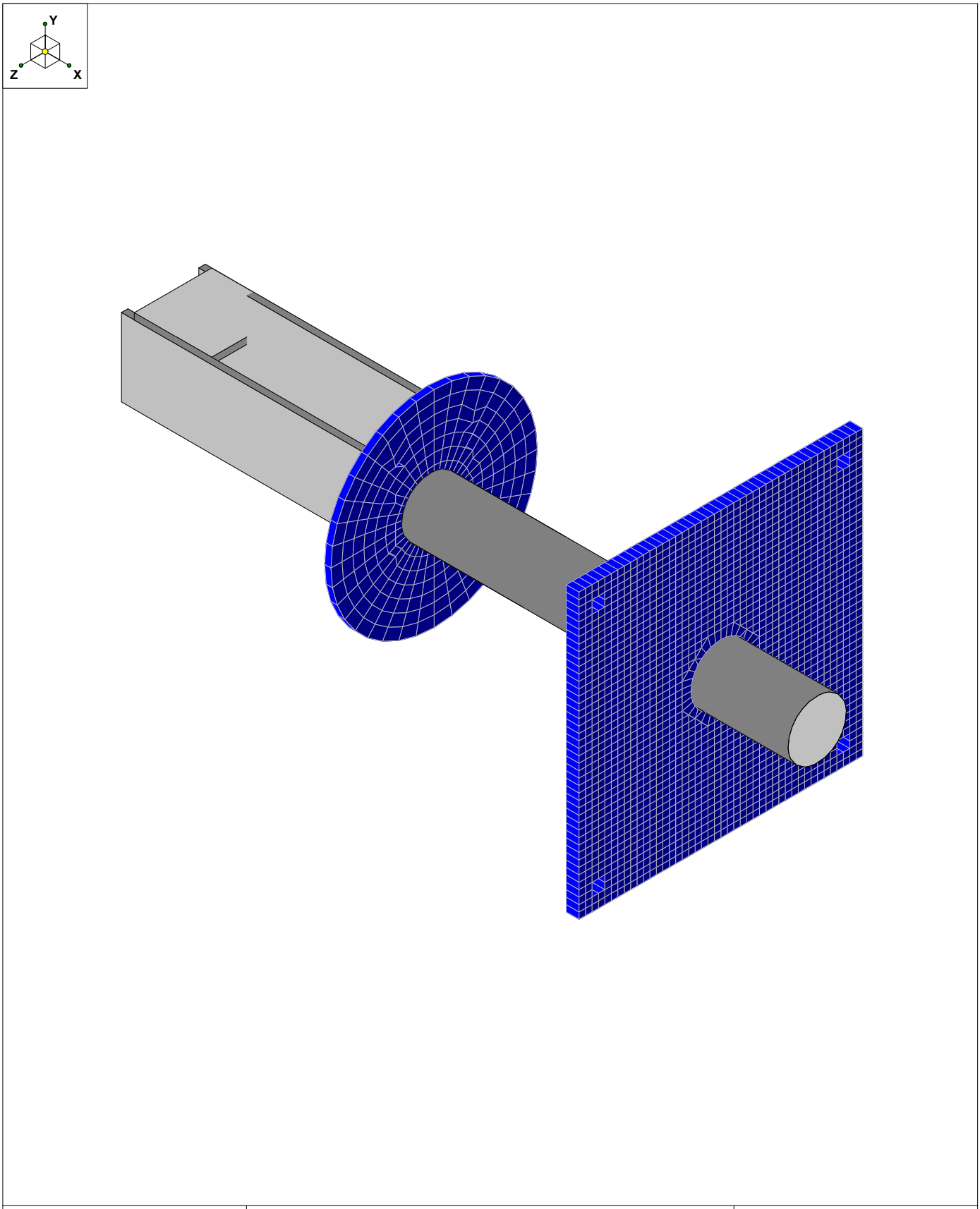

CEES	242A Pump Room Wall Nozzles	
JDY		
		242A Evaporator Wall Nozzles 2in...

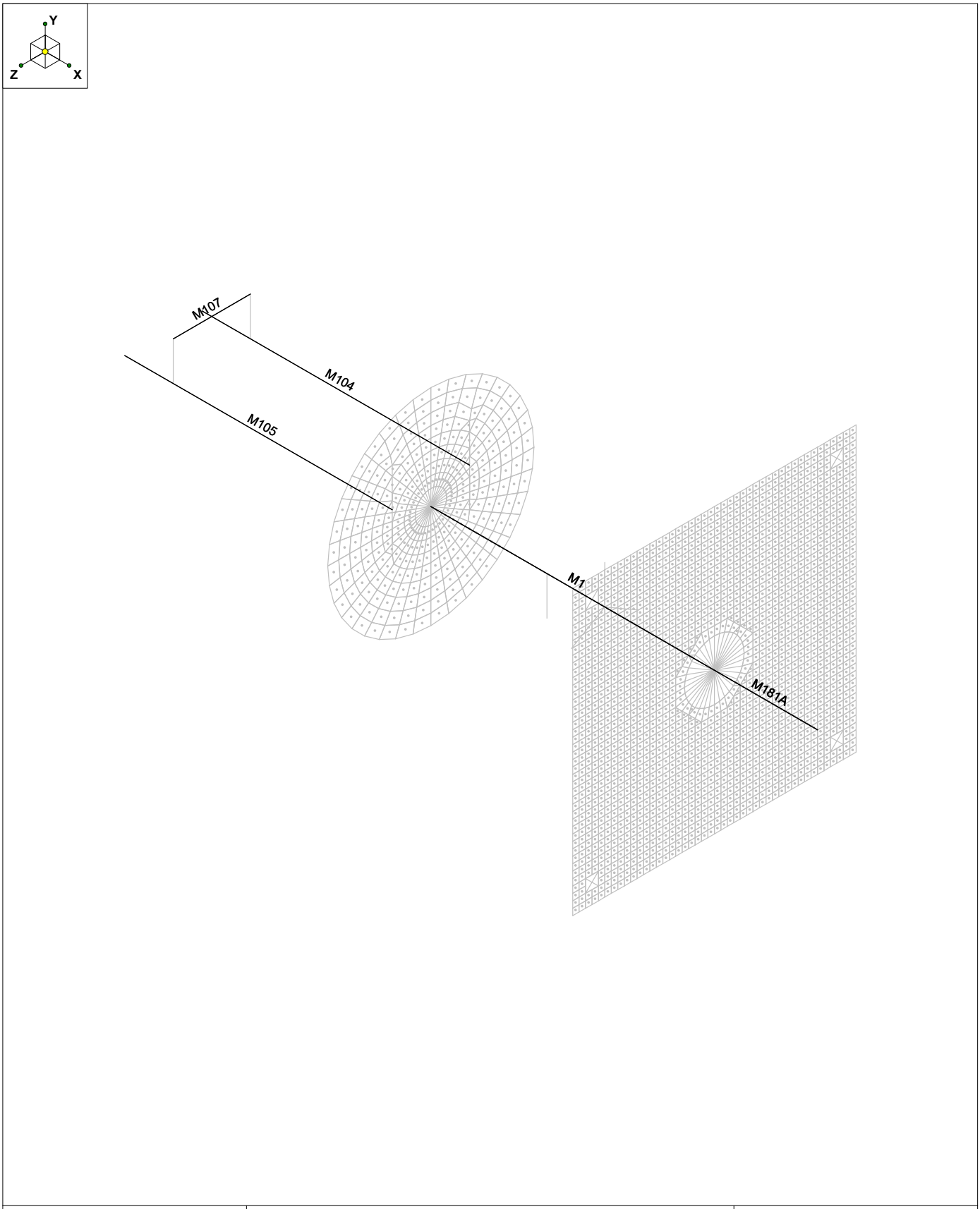

CEES	242A Pump Room Wall Nozzles	
JDY		
		242A Evaporator Wall Nozzles 2in...

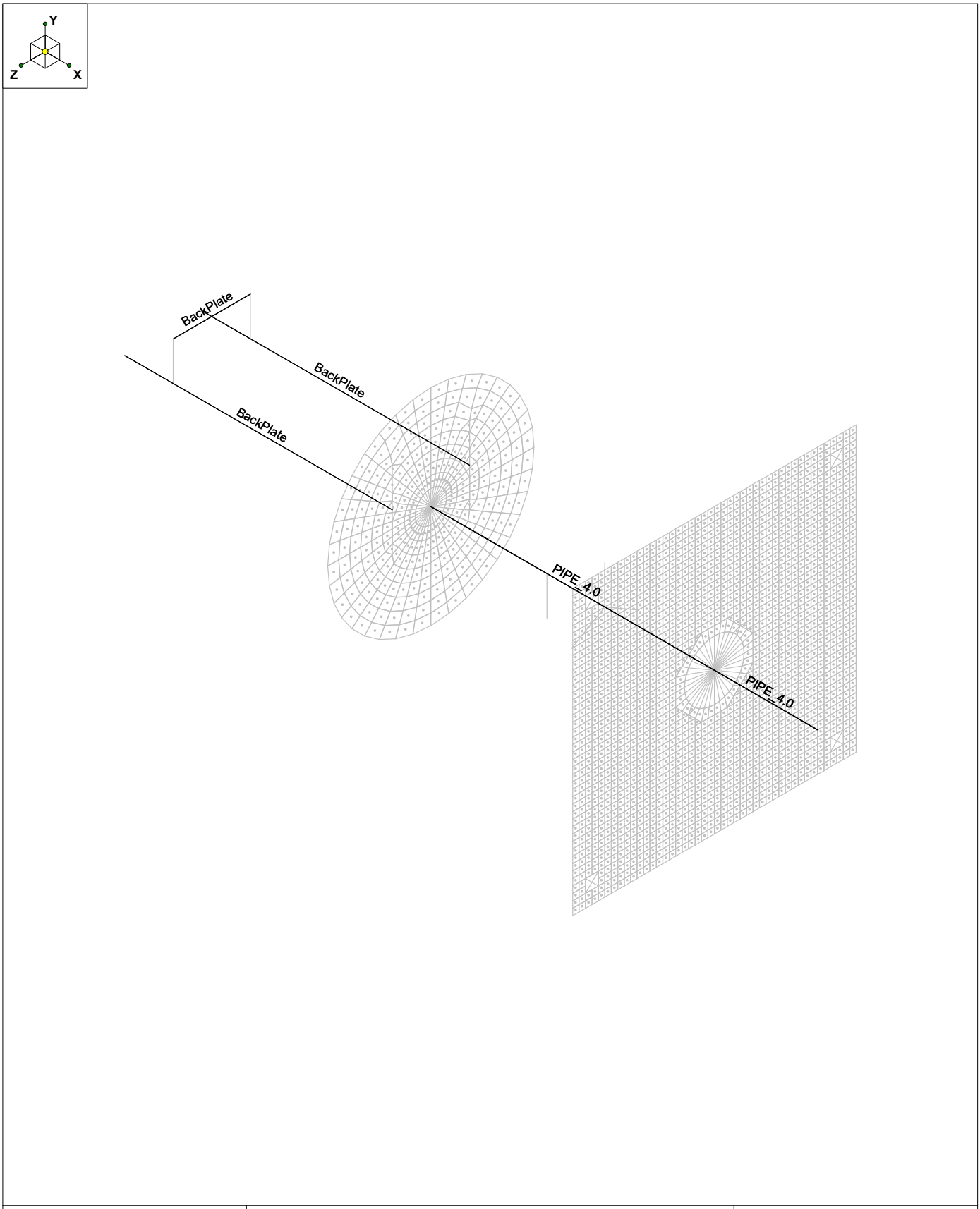

CEES	242A Pump Room Wall Nozzles	
JDY		
		242A Evaporator Wall Nozzles 2in...

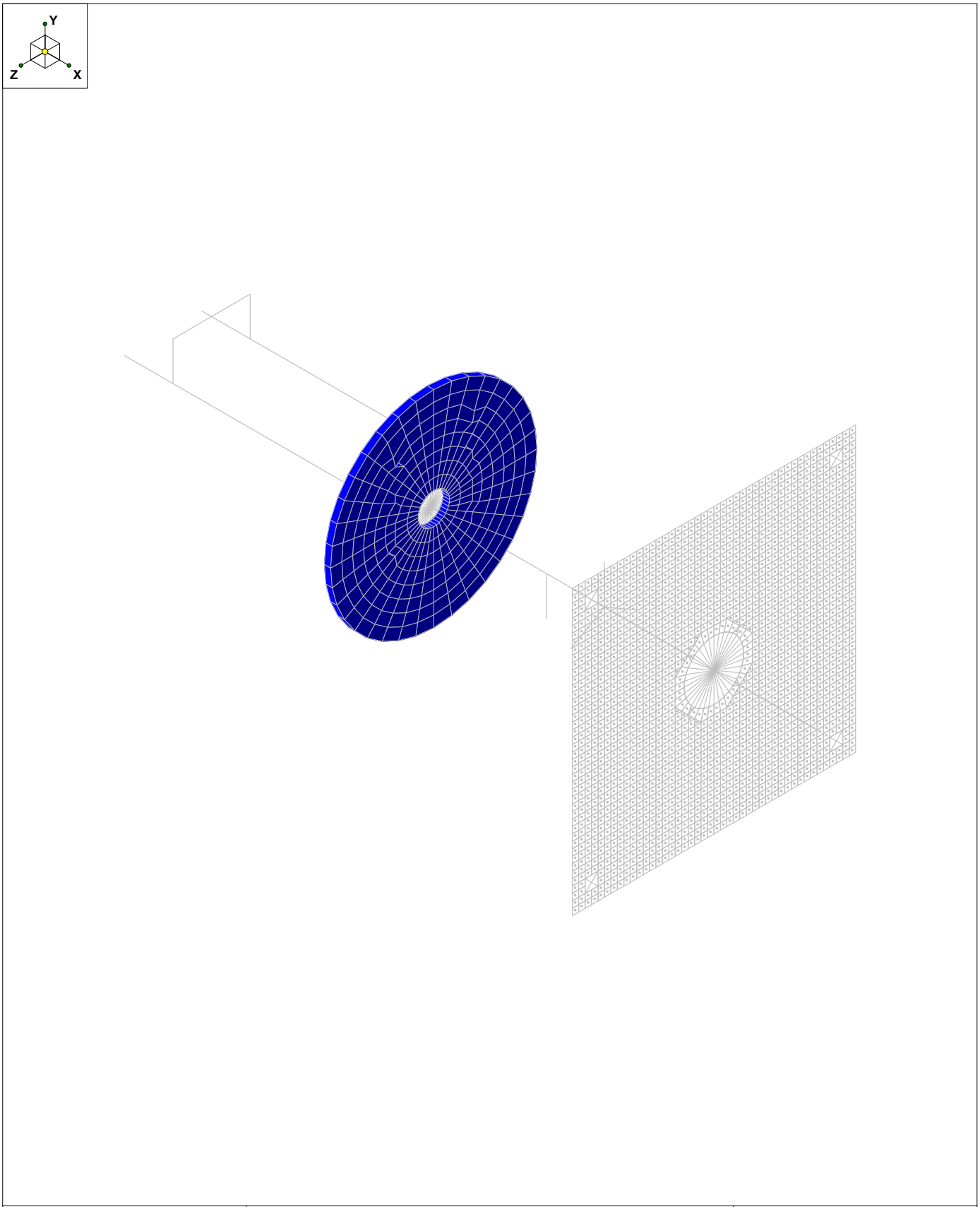

CEES		
JDY	242A Pump Room Wall Nozzles	
	0.5" Thick Plate	242A Evaporator Wall Nozzles 2in...

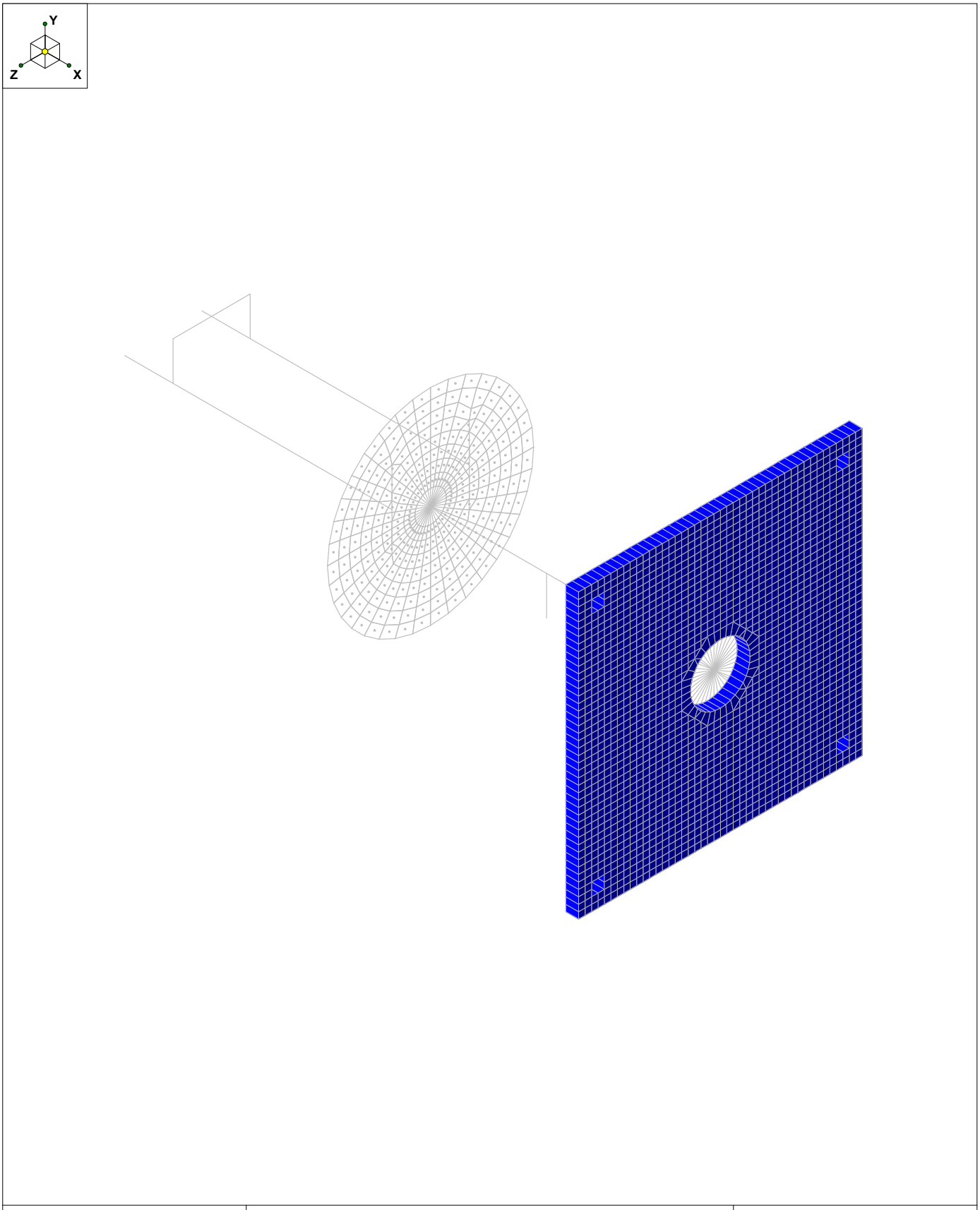

CEES		
JDY	242A Pump Room Wall Nozzles	
	1" Thick Plate	242A Evaporator Wall Nozzles 2in...

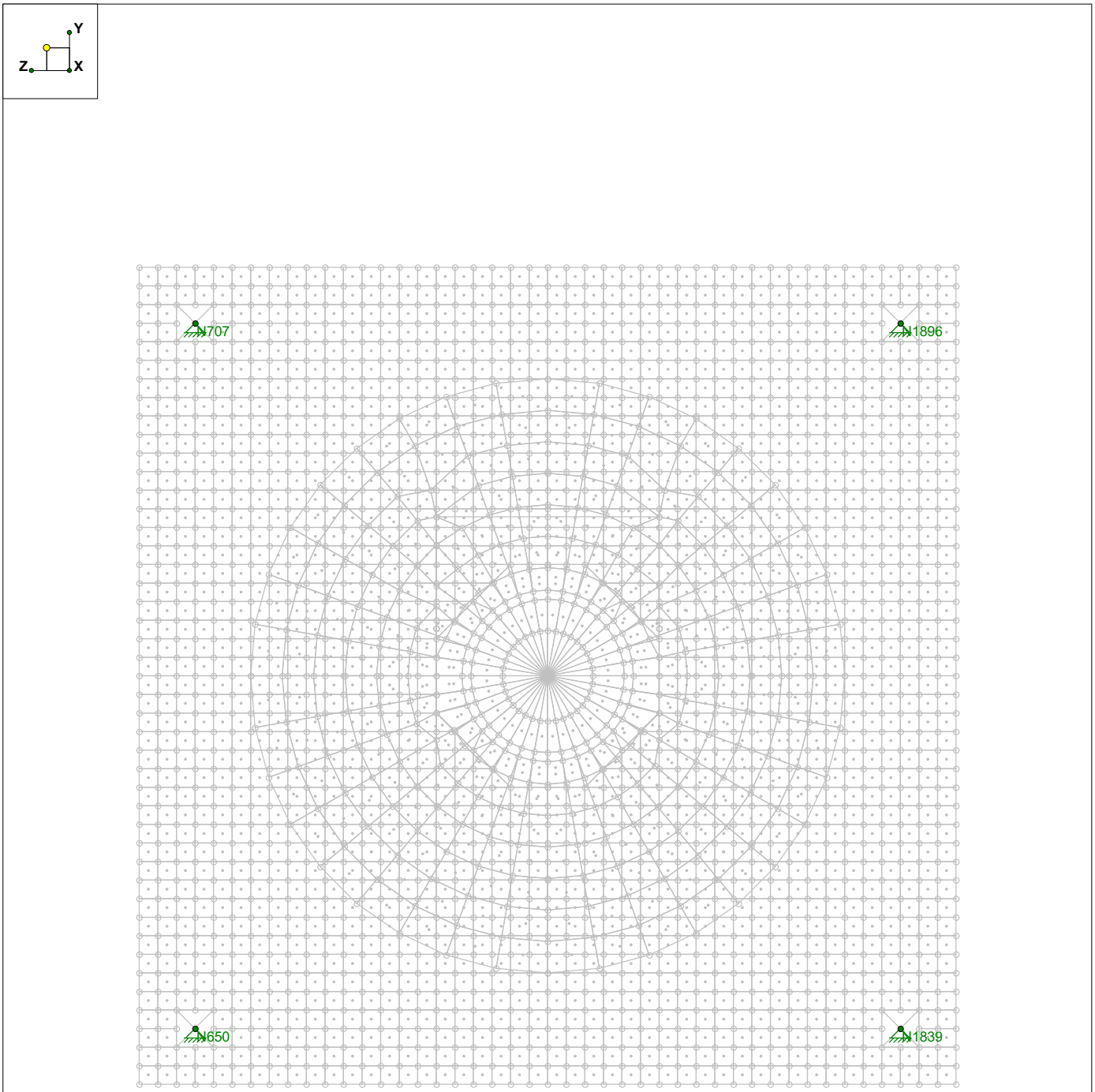

CEES		
JDY	242A Pump Room Wall Nozzles	
	Anchorage Joints (KB-TZ Locations)	242A Evaporator Wall Nozzles 2in...

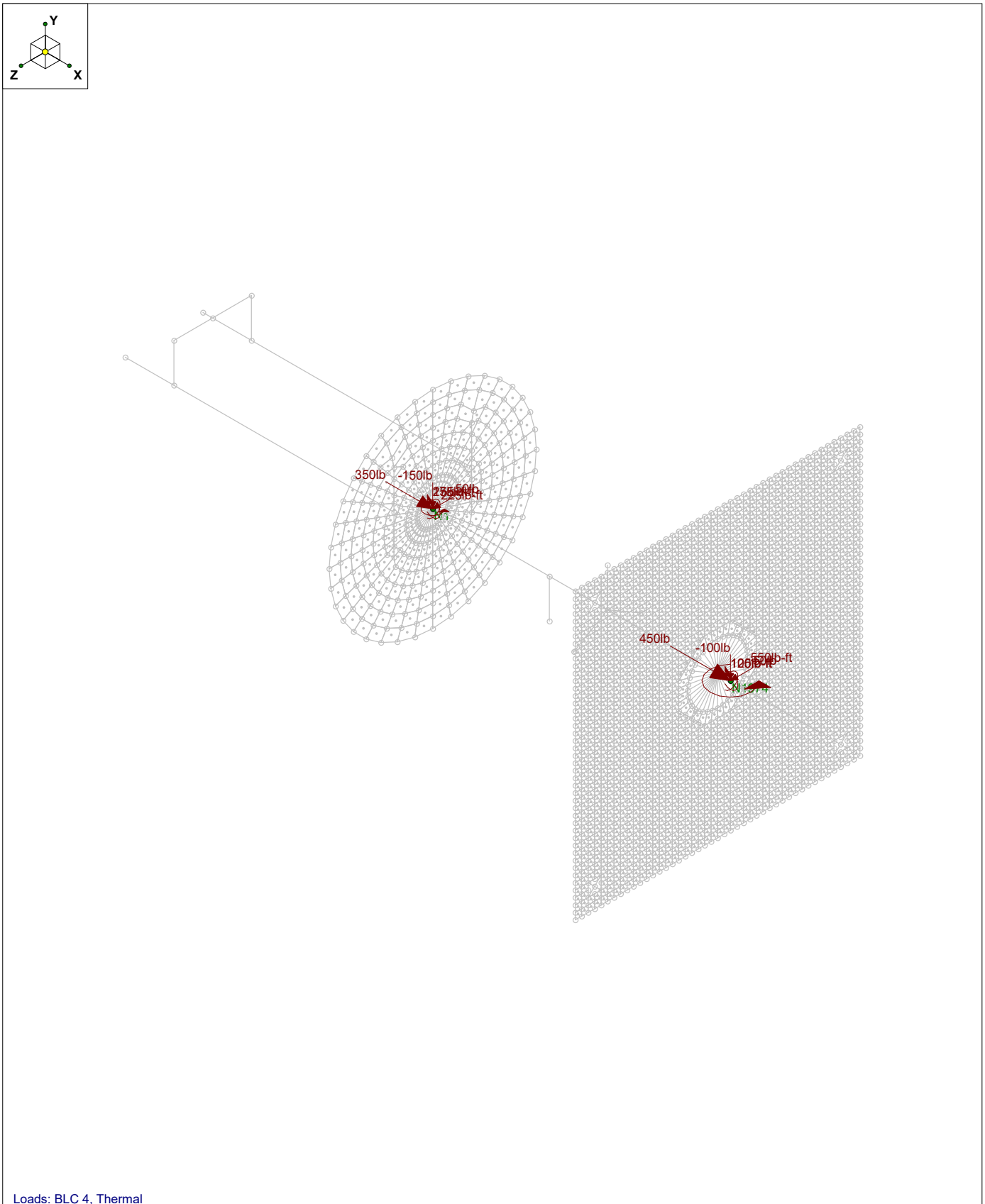

Loads: BLC 4, Thermal

CEES		
JDY	242A Pump Room Wall Nozzles	
	N1 = Primary, N1974 = Encasement.	242A Evaporator Wall Nozzles 2in...

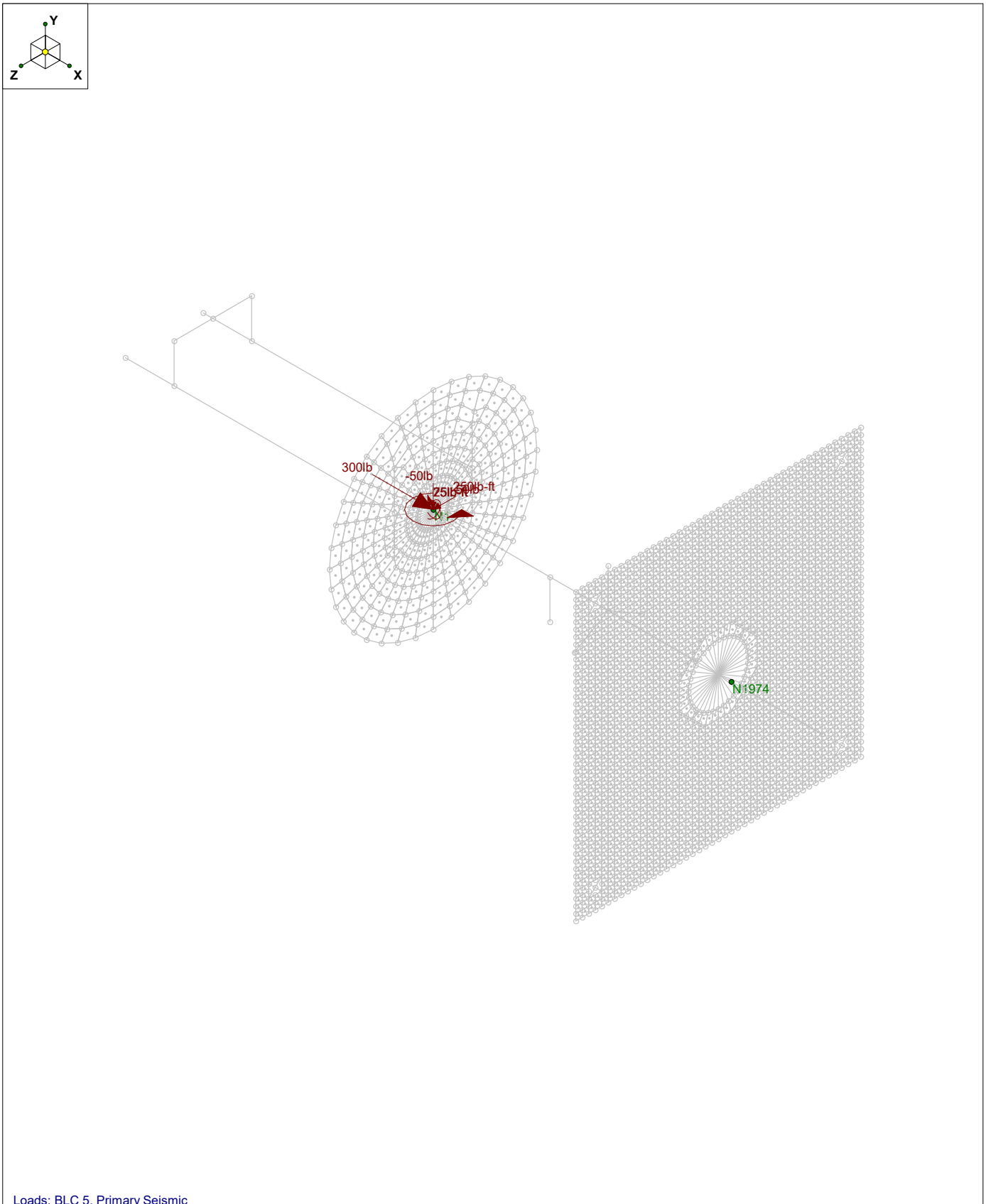

Loads: BLC 5, Primary Seismic

CEES	242A Pump Room Wall Nozzles N1=Primary	
JDY		
		242A Evaporator Wall Nozzles 2in...

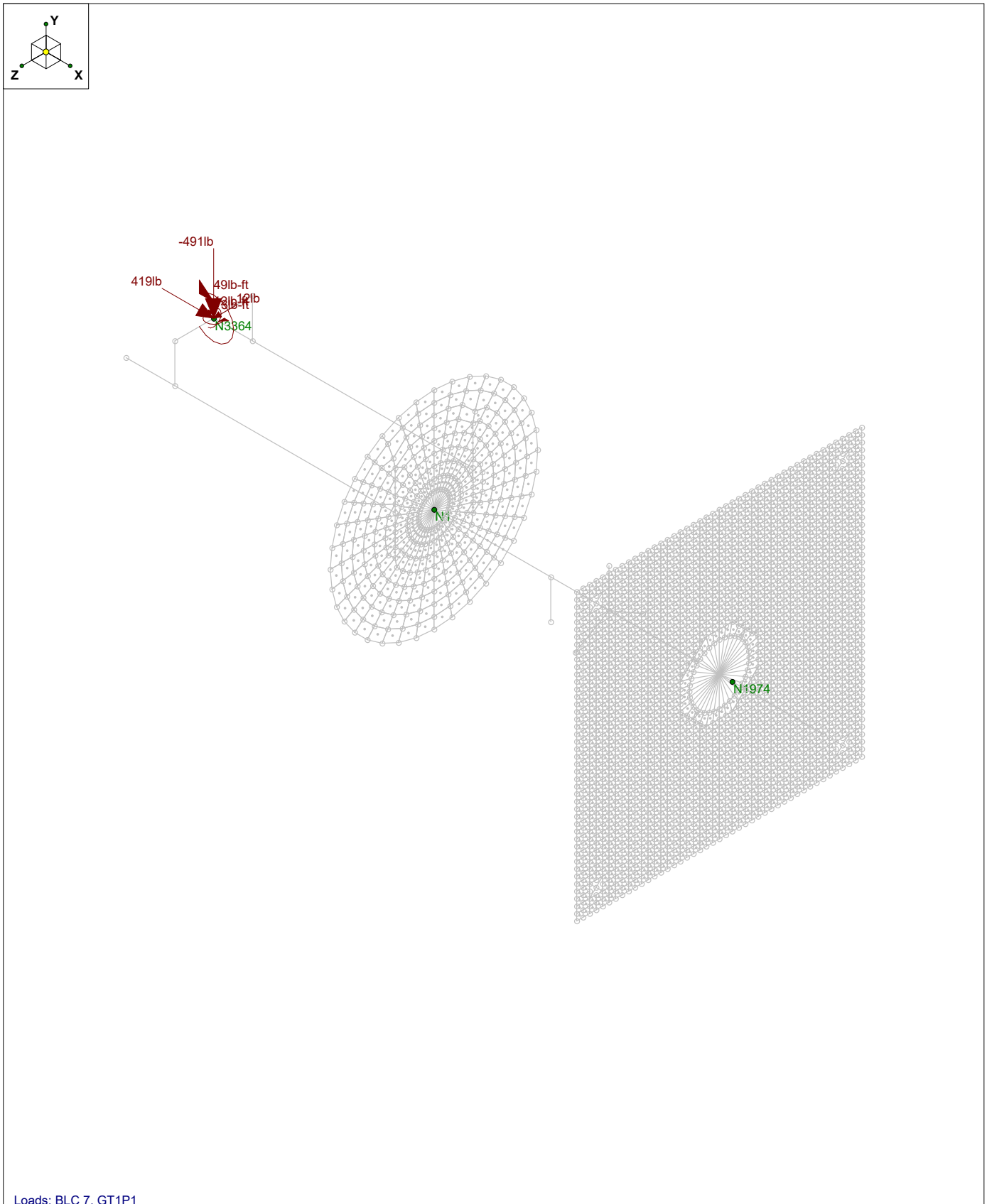

Loads: BLC 7, GT1P1

CEES		
JDY	242A Pump Room Wall Nozzles	
	N3364 = Jumper	242A Evaporator Wall Nozzles 2in...

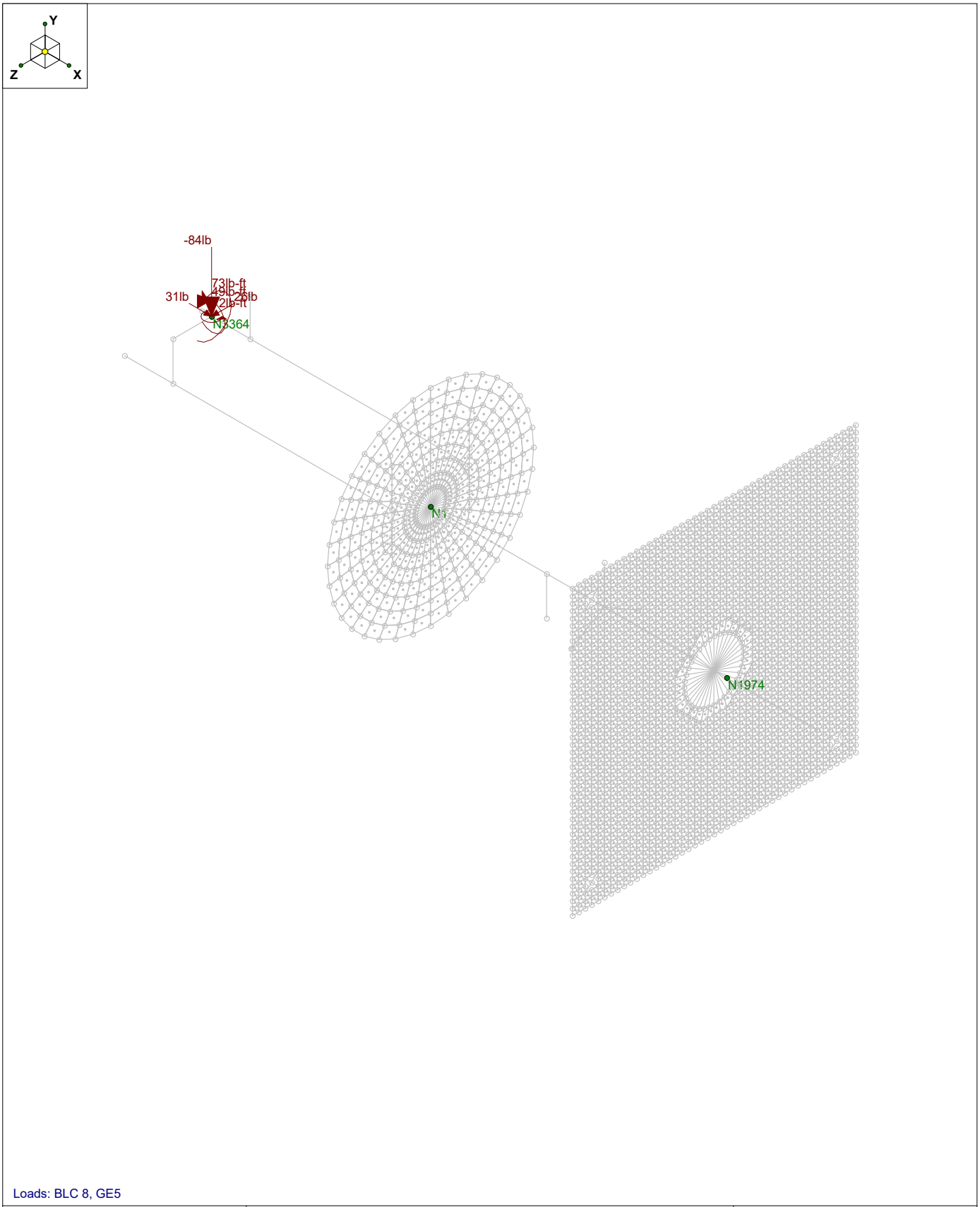

Loads: BLC 8, GE5

CEES		
JDY	242A Pump Room Wall Nozzles	
	N3364 = Primary	242A Evaporator Wall Nozzles 2in...

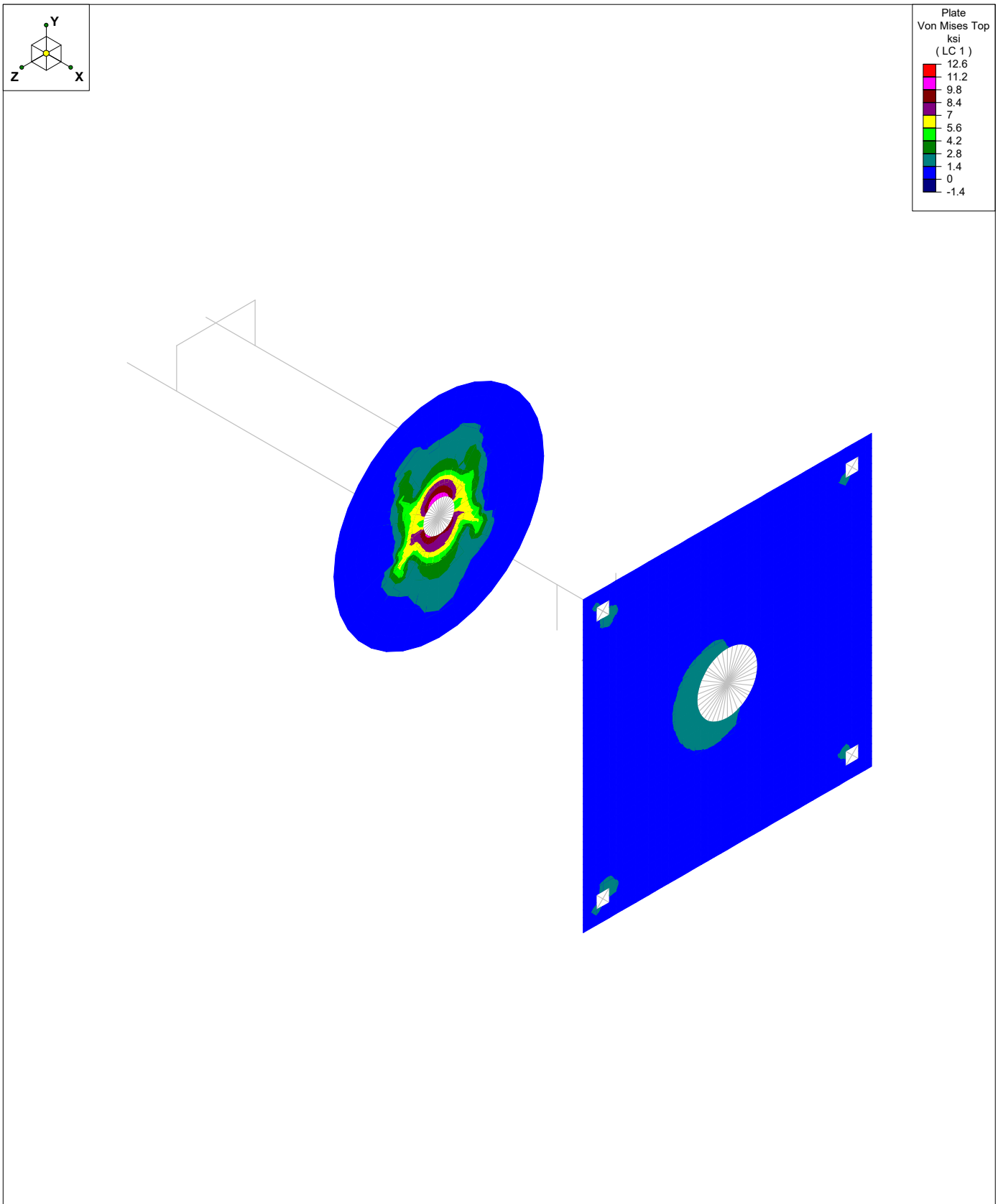

Results for LC 1, 1.2DL + 1.2Thermal + 1.2GT1P1

CEES	242A Pump Room Wall Nozzles	
JDY		
		242A Evaporator Wall Nozzles 2in...

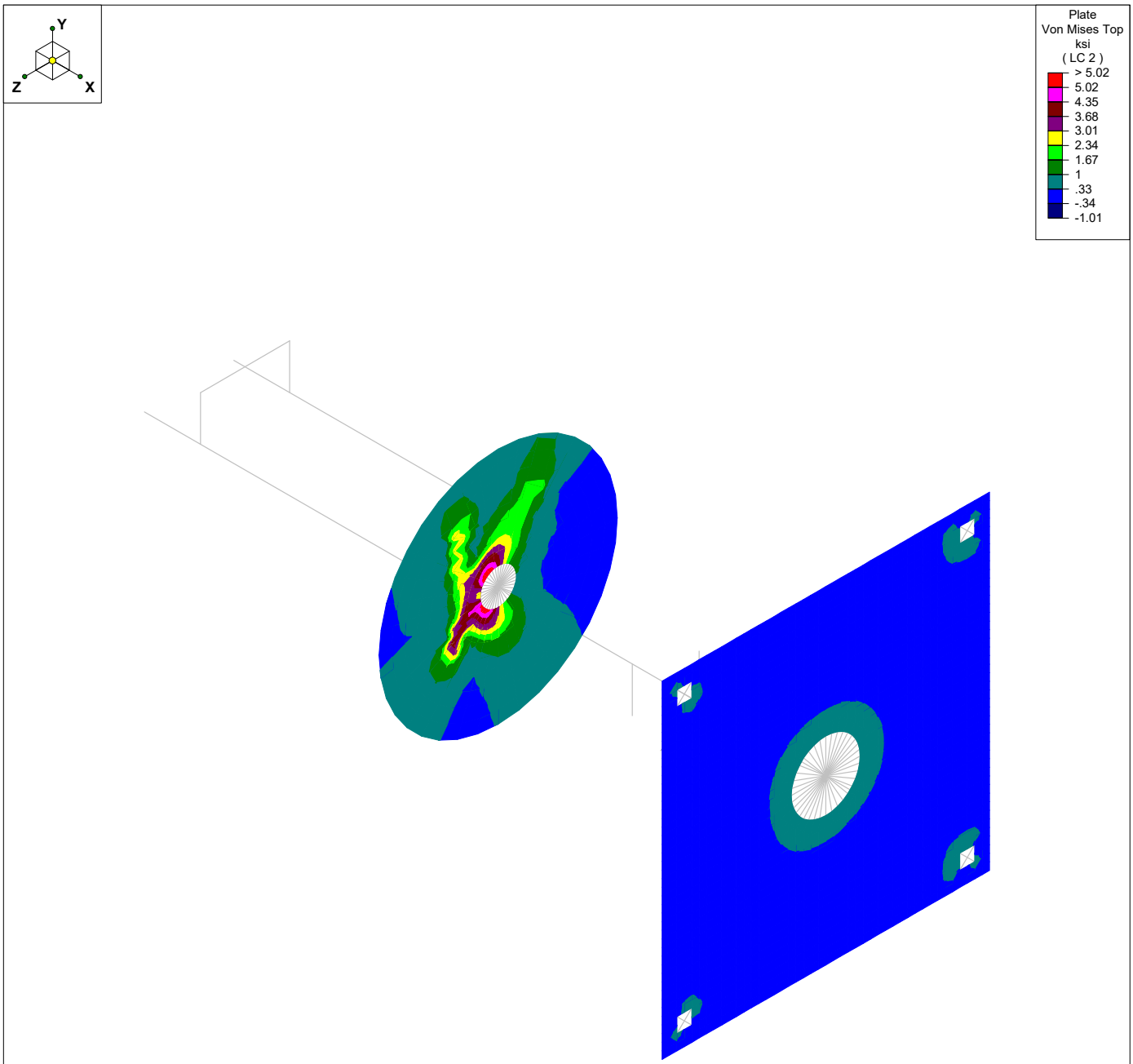

Results for LC 2, 1.2DL + 1.4GE5 + 1.4Primary Seismic

CEES	242A Pump Room Wall Nozzles	
JDY		
		242A Evaporator Wall Nozzles 2in...

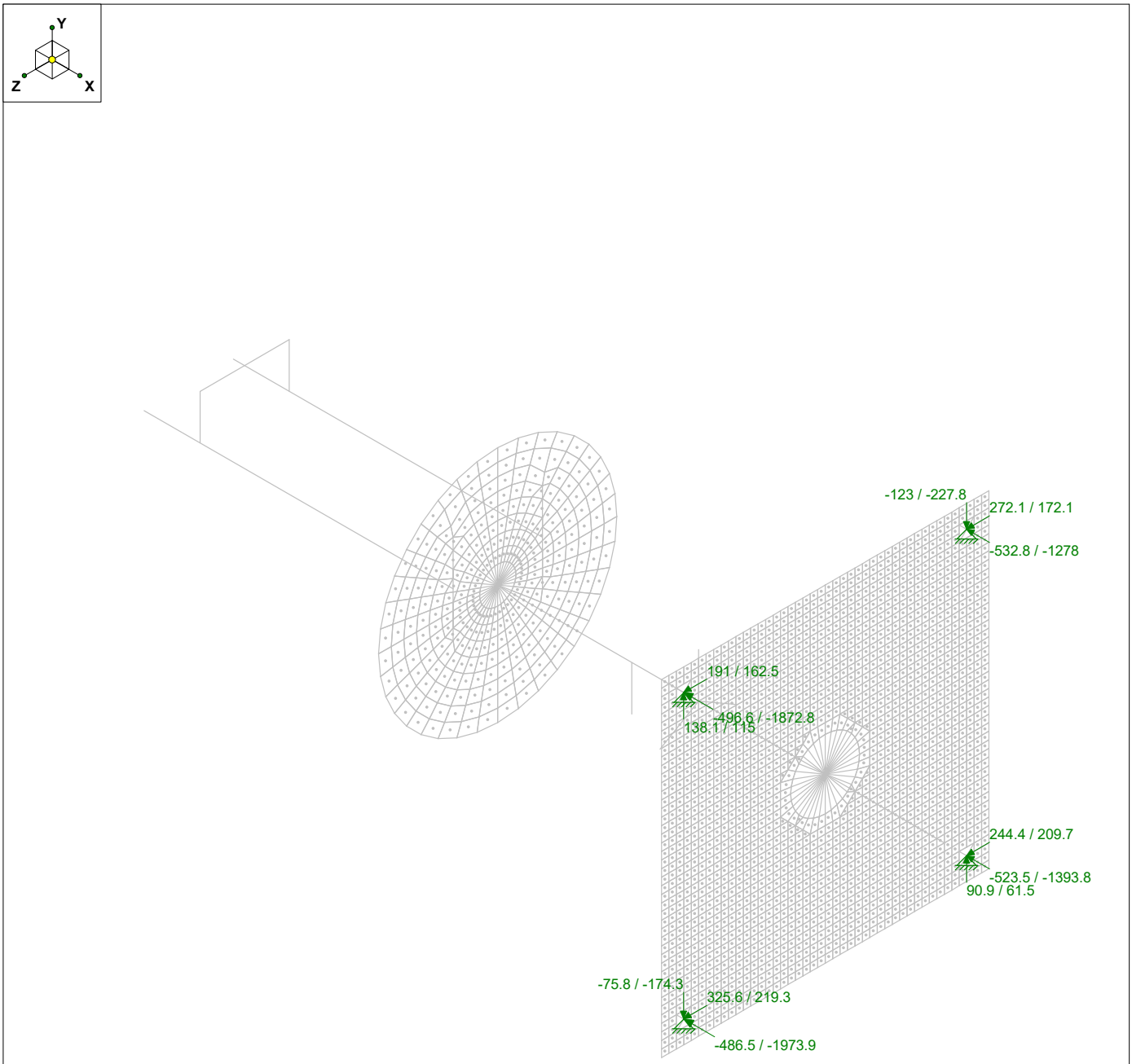

Envelope Only Solution
Reaction and Moment Units are lb and lb-ft (Enveloped)

CEES	242A Pump Room Wall Nozzles	
JDY		
		242A Evaporator Wall Nozzles 2in...

Columbia Energy AND ENVIRONMENTAL SERVICES

Company : CEES
Designer : JDY
Job Number :
Model Name : 242A Pump Room Wall Nozzles

Apr 16, 2020
11:35 AM
Checked By: RDL

Envelope Joint Reactions

	Joint		X [lb]	LC	Y [lb]	LC	Z [lb]	LC	MX [lb-ft]	LC	MY [lb-ft]	LC	MZ [lb-ft]	LC
1	N1839	max	-523.486	2	90.871	2	244.432	1	0	1	0	1	0	1
2		min	-1393.847	1	61.541	1	209.735	2	0	1	0	1	0	1
3	N650	max	-486.518	2	-75.813	2	325.575	1	0	1	0	1	0	1
4		min	-1973.853	1	-174.345	1	219.254	2	0	1	0	1	0	1
5	N707	max	-496.623	2	138.06	2	190.966	1	0	1	0	1	0	1
6		min	-1872.795	1	115.006	1	162.547	2	0	1	0	1	0	1
7	N1896	max	-532.792	2	-123.002	2	272.11	1	0	1	0	1	0	1
8		min	-1278.006	1	-227.811	1	172.065	2	0	1	0	1	0	1

Hot Rolled Steel Properties

	Label	E [ksi]	G [ksi]	Nu	Therm (\...	Density[lb/ft^3]	Yield[ksi]	Ry	Fu[ksi]	Rt
1	A992	29000	11154	.3	.65	490	50	1.1	65	1.1
2	A36 Gr.36	29000	11154	.3	.65	490	36	1.5	58	1.2
3	A572 Gr.50	29000	11154	.3	.65	490	50	1.1	65	1.1
4	A500 Gr.B RND	29000	11154	.3	.65	527	42	1.4	58	1.3
5	A500 Gr.B Rect	29000	11154	.3	.65	527	46	1.4	58	1.3
6	A53 Gr.B	29000	11154	.3	.65	490	35	1.6	60	1.2
7	A1085	29000	11154	.3	.65	490	50	1.4	65	1.3

General Material Properties

	Label	E [ksi]	G [ksi]	Nu	Therm (\1E5 F)	Density[lb/ft^3]
1	gen_Conc3NW	3155	1372	.15	.6	145
2	gen_Conc4NW	3644	1584	.15	.6	145
3	gen_Conc3LW	2085	906	.15	.6	109.999
4	gen_Conc4LW	2408	1047	.15	.6	109.999
5	gen_Alum	10100	4077	.3	1.29	173
6	gen_Steel	29000	11154	.3	.65	490
7	gen_Plywood	1800	38	0	.3	35
8	RIGID	1e+6		.3	0	0

Hot Rolled Steel Section Sets

	Label	Shape	Type	Design List	Material	Design R...	A [in2]	Iyy [in4]	Izz [in4]	J [in4]
1	2" Sleeve	PIPE 4.0	Beam	None	A53 Gr.B	Typical	2.96	6.82	6.82	13.6
2	Back Plates	BackPlate	Beam	None	A36 Gr.36	Typical	3	.063	9	.237

Plate Primary Data

	Label	A Joint	B Joint	C Joint	D Joint	Material	Thickness[in]
1	P1	N549	N302	N548		gen_Steel	1
2	P2	N548	N302	N553	N547	gen_Steel	1
3	P3	N546	N547	N553	N324	gen_Steel	1
4	P4	N522	N228	N521		gen_Steel	1
5	P5	N521	N228	N554	N520	gen_Steel	1
6	P6	N519	N520	N554	N247	gen_Steel	1
7	P7	N531	N227	N530		gen_Steel	1
8	P8	N530	N227	N555	N529	gen_Steel	1
9	P9	N528	N529	N555	N205	gen_Steel	1
10	P10	N540	N301	N539		gen_Steel	1
11	P11	N539	N301	N556	N538	gen_Steel	1
12	P12	N537	N538	N556	N282	gen_Steel	1
13	P13	N10	N557	N559	N558	gen_Steel	1
14	P14	N557	N13	N560	N559	gen_Steel	1
15	P15	N558	N559	N561	N34	gen_Steel	1
16	P16	N559	N560	N35	N561	gen_Steel	1
17	P17	N13	N562	N563	N560	gen_Steel	1
18	P18	N562	N14	N564	N563	gen_Steel	1
19	P19	N560	N563	N565	N35	gen_Steel	1
20	P20	N563	N564	N36	N565	gen_Steel	1
21	P21	N14	N566	N567	N564	gen_Steel	1
22	P22	N566	N15	N568	N567	gen_Steel	1
23	P23	N564	N567	N569	N36	gen_Steel	1
24	P24	N567	N568	N37	N569	gen_Steel	1
25	P25	N15	N570	N571	N568	gen_Steel	1

Plate Primary Data (Continued)

	Label	A Joint	B Joint	C Joint	D Joint	Material	Thickness[in]
26	P26	N570	N16	N572	N571	gen_Steel	1
27	P27	N568	N571	N573	N37	gen_Steel	1
28	P28	N571	N572	N38	N573	gen_Steel	1
29	P29	N16	N574	N575	N572	gen_Steel	1
30	P30	N574	N17	N576	N575	gen_Steel	1
31	P31	N572	N575	N577	N38	gen_Steel	1
32	P32	N575	N576	N39	N577	gen_Steel	1
33	P33	N17	N578	N579	N576	gen_Steel	1
34	P34	N578	N18	N580	N579	gen_Steel	1
35	P35	N576	N579	N581	N39	gen_Steel	1
36	P36	N579	N580	N40	N581	gen_Steel	1
37	P37	N18	N582	N583	N580	gen_Steel	1
38	P38	N582	N19	N584	N583	gen_Steel	1
39	P39	N580	N583	N585	N40	gen_Steel	1
40	P40	N583	N584	N41	N585	gen_Steel	1
41	P41	N19	N586	N587	N584	gen_Steel	1
42	P42	N586	N20	N588	N587	gen_Steel	1
43	P43	N584	N587	N589	N41	gen_Steel	1
44	P44	N587	N588	N42	N589	gen_Steel	1
45	P45	N20	N590	N591	N588	gen_Steel	1
46	P46	N590	N21	N592	N591	gen_Steel	1
47	P47	N588	N591	N593	N42	gen_Steel	1
48	P48	N591	N592	N43	N593	gen_Steel	1
49	P49	N21	N594	N595	N592	gen_Steel	1
50	P50	N594	N22	N596	N595	gen_Steel	1
51	P51	N592	N595	N597	N43	gen_Steel	1
52	P52	N595	N596	N44	N597	gen_Steel	1
53	P53	N22	N598	N599	N596	gen_Steel	1
54	P54	N598	N23	N600	N599	gen_Steel	1
55	P55	N596	N599	N601	N44	gen_Steel	1
56	P56	N599	N600	N45	N601	gen_Steel	1
57	P57	N23	N602	N603	N600	gen_Steel	1
58	P58	N602	N24	N604	N603	gen_Steel	1
59	P59	N600	N603	N605	N45	gen_Steel	1
60	P60	N603	N604	N46	N605	gen_Steel	1
61	P61	N24	N606	N607	N604	gen_Steel	1
62	P62	N606	N25	N608	N607	gen_Steel	1
63	P63	N604	N607	N609	N46	gen_Steel	1
64	P64	N607	N608	N47	N609	gen_Steel	1
65	P65	N25	N610	N611	N608	gen_Steel	1
66	P66	N610	N26	N612	N611	gen_Steel	1
67	P67	N608	N611	N613	N47	gen_Steel	1
68	P68	N611	N612	N48	N613	gen_Steel	1
69	P69	N26	N614	N615	N612	gen_Steel	1
70	P70	N614	N27	N616	N615	gen_Steel	1
71	P71	N612	N615	N617	N48	gen_Steel	1
72	P72	N615	N616	N49	N617	gen_Steel	1
73	P73	N27	N618	N619	N616	gen_Steel	1
74	P74	N618	N28	N620	N619	gen_Steel	1
75	P75	N616	N619	N621	N49	gen_Steel	1
76	P76	N619	N620	N50	N621	gen_Steel	1
77	P77	N28	N622	N623	N620	gen_Steel	1
78	P78	N622	N29	N624	N623	gen_Steel	1
79	P79	N620	N623	N625	N50	gen_Steel	1
80	P80	N623	N624	N51	N625	gen_Steel	1
81	P81	N29	N626	N627	N624	gen_Steel	1
82	P82	N626	N30	N628	N627	gen_Steel	1

Plate Primary Data (Continued)

	Label	A Joint	B Joint	C Joint	D Joint	Material	Thickness[in]
83	P83	N624	N627	N629	N51	gen_Steel	1
84	P84	N627	N628	N52	N629	gen_Steel	1
85	P85	N30	N630	N631	N628	gen_Steel	1
86	P86	N630	N31	N632	N631	gen_Steel	1
87	P87	N628	N631	N633	N52	gen_Steel	1
88	P88	N631	N632	N53	N633	gen_Steel	1
89	P89	N31	N634	N635	N632	gen_Steel	1
90	P90	N634	N32	N636	N635	gen_Steel	1
91	P91	N632	N635	N637	N53	gen_Steel	1
92	P92	N635	N636	N54	N637	gen_Steel	1
93	P93	N32	N638	N639	N636	gen_Steel	1
94	P94	N638	N33	N640	N639	gen_Steel	1
95	P95	N636	N639	N641	N54	gen_Steel	1
96	P96	N639	N640	N55	N641	gen_Steel	1
97	P97	N33	N642	N643	N640	gen_Steel	1
98	P98	N642	N9	N644	N643	gen_Steel	1
99	P99	N640	N643	N645	N55	gen_Steel	1
100	P100	N643	N644	N56	N645	gen_Steel	1
101	P101	N34	N561	N647	N646	gen_Steel	1
102	P102	N561	N35	N648	N647	gen_Steel	1
103	P103	N646	N647	N649	N57	gen_Steel	1
104	P104	N647	N648	N58	N649	gen_Steel	1
105	P105	N36	N569	N653	N651	gen_Steel	1
106	P106	N569	N37	N654	N653	gen_Steel	1
107	P107	N651	N653	N655	N59	gen_Steel	1
108	P108	N653	N654	N60	N655	gen_Steel	1
109	P109	N37	N573	N656	N654	gen_Steel	1
110	P110	N573	N38	N657	N656	gen_Steel	1
111	P111	N654	N656	N658	N60	gen_Steel	1
112	P112	N656	N657	N61	N658	gen_Steel	1
113	P113	N38	N577	N659	N657	gen_Steel	1
114	P114	N577	N39	N660	N659	gen_Steel	1
115	P115	N657	N659	N661	N61	gen_Steel	1
116	P116	N659	N660	N62	N661	gen_Steel	1
117	P117	N39	N581	N662	N660	gen_Steel	1
118	P118	N581	N40	N663	N662	gen_Steel	1
119	P119	N660	N662	N664	N62	gen_Steel	1
120	P120	N662	N663	N63	N664	gen_Steel	1
121	P121	N40	N585	N665	N663	gen_Steel	1
122	P122	N585	N41	N666	N665	gen_Steel	1
123	P123	N663	N665	N667	N63	gen_Steel	1
124	P124	N665	N666	N64	N667	gen_Steel	1
125	P125	N41	N589	N668	N666	gen_Steel	1
126	P126	N589	N42	N669	N668	gen_Steel	1
127	P127	N666	N668	N670	N64	gen_Steel	1
128	P128	N668	N669	N65	N670	gen_Steel	1
129	P129	N42	N593	N671	N669	gen_Steel	1
130	P130	N593	N43	N672	N671	gen_Steel	1
131	P131	N669	N671	N673	N65	gen_Steel	1
132	P132	N671	N672	N66	N673	gen_Steel	1
133	P133	N43	N597	N674	N672	gen_Steel	1
134	P134	N597	N44	N675	N674	gen_Steel	1
135	P135	N672	N674	N676	N66	gen_Steel	1
136	P136	N674	N675	N67	N676	gen_Steel	1
137	P137	N44	N601	N677	N675	gen_Steel	1
138	P138	N601	N45	N678	N677	gen_Steel	1
139	P139	N675	N677	N679	N67	gen_Steel	1

Plate Primary Data (Continued)

	Label	A Joint	B Joint	C Joint	D Joint	Material	Thickness[in]
140	P140	N677	N678	N68	N679	gen_Steel	1
141	P141	N45	N605	N680	N678	gen_Steel	1
142	P142	N605	N46	N681	N680	gen_Steel	1
143	P143	N678	N680	N682	N68	gen_Steel	1
144	P144	N680	N681	N69	N682	gen_Steel	1
145	P145	N46	N609	N683	N681	gen_Steel	1
146	P146	N609	N47	N684	N683	gen_Steel	1
147	P147	N681	N683	N685	N69	gen_Steel	1
148	P148	N683	N684	N70	N685	gen_Steel	1
149	P149	N47	N613	N686	N684	gen_Steel	1
150	P150	N613	N48	N687	N686	gen_Steel	1
151	P151	N684	N686	N688	N70	gen_Steel	1
152	P152	N686	N687	N71	N688	gen_Steel	1
153	P153	N48	N617	N689	N687	gen_Steel	1
154	P154	N617	N49	N690	N689	gen_Steel	1
155	P155	N687	N689	N691	N71	gen_Steel	1
156	P156	N689	N690	N72	N691	gen_Steel	1
157	P157	N49	N621	N692	N690	gen_Steel	1
158	P158	N621	N50	N693	N692	gen_Steel	1
159	P159	N690	N692	N694	N72	gen_Steel	1
160	P160	N692	N693	N73	N694	gen_Steel	1
161	P161	N50	N625	N695	N693	gen_Steel	1
162	P162	N625	N51	N696	N695	gen_Steel	1
163	P163	N693	N695	N697	N73	gen_Steel	1
164	P164	N695	N696	N74	N697	gen_Steel	1
165	P165	N51	N629	N698	N696	gen_Steel	1
166	P166	N629	N52	N699	N698	gen_Steel	1
167	P167	N696	N698	N700	N74	gen_Steel	1
168	P168	N698	N699	N75	N700	gen_Steel	1
169	P169	N52	N633	N701	N699	gen_Steel	1
170	P170	N633	N53	N702	N701	gen_Steel	1
171	P171	N699	N701	N703	N75	gen_Steel	1
172	P172	N701	N702	N76	N703	gen_Steel	1
173	P173	N53	N637	N704	N702	gen_Steel	1
174	P174	N637	N54	N705	N704	gen_Steel	1
175	P175	N702	N704	N706	N76	gen_Steel	1
176	P176	N704	N705	N77	N706	gen_Steel	1
177	P177	N55	N645	N710	N708	gen_Steel	1
178	P178	N645	N56	N711	N710	gen_Steel	1
179	P179	N708	N710	N712	N78	gen_Steel	1
180	P180	N710	N711	N79	N712	gen_Steel	1
181	P181	N57	N649	N714	N713	gen_Steel	1
182	P182	N649	N58	N715	N714	gen_Steel	1
183	P183	N713	N714	N716	N80	gen_Steel	1
184	P184	N714	N715	N81	N716	gen_Steel	1
185	P185	N58	N652	N717	N715	gen_Steel	1
186	P186	N652	N59	N718	N717	gen_Steel	1
187	P187	N715	N717	N719	N81	gen_Steel	1
188	P188	N717	N718	N82	N719	gen_Steel	1
189	P189	N59	N655	N720	N718	gen_Steel	1
190	P190	N655	N60	N721	N720	gen_Steel	1
191	P191	N718	N720	N722	N82	gen_Steel	1
192	P192	N720	N721	N83	N722	gen_Steel	1
193	P193	N60	N658	N723	N721	gen_Steel	1
194	P194	N658	N61	N724	N723	gen_Steel	1
195	P195	N721	N723	N725	N83	gen_Steel	1
196	P196	N723	N724	N84	N725	gen_Steel	1

Plate Primary Data (Continued)

	Label	A Joint	B Joint	C Joint	D Joint	Material	Thickness[in]
197	P197	N61	N661	N726	N724	gen_Steel	1
198	P198	N661	N62	N727	N726	gen_Steel	1
199	P199	N724	N726	N728	N84	gen_Steel	1
200	P200	N726	N727	N85	N728	gen_Steel	1
201	P201	N62	N664	N729	N727	gen_Steel	1
202	P202	N664	N63	N730	N729	gen_Steel	1
203	P203	N727	N729	N731	N85	gen_Steel	1
204	P204	N729	N730	N86	N731	gen_Steel	1
205	P205	N63	N667	N732	N730	gen_Steel	1
206	P206	N667	N64	N733	N732	gen_Steel	1
207	P207	N730	N732	N734	N86	gen_Steel	1
208	P208	N732	N733	N87	N734	gen_Steel	1
209	P209	N64	N670	N735	N733	gen_Steel	1
210	P210	N670	N65	N736	N735	gen_Steel	1
211	P211	N733	N735	N737	N87	gen_Steel	1
212	P212	N735	N736	N88	N737	gen_Steel	1
213	P213	N65	N673	N738	N736	gen_Steel	1
214	P214	N673	N66	N739	N738	gen_Steel	1
215	P215	N736	N738	N740	N88	gen_Steel	1
216	P216	N738	N739	N89	N740	gen_Steel	1
217	P217	N66	N676	N741	N739	gen_Steel	1
218	P218	N676	N67	N742	N741	gen_Steel	1
219	P219	N739	N741	N743	N89	gen_Steel	1
220	P220	N741	N742	N90	N743	gen_Steel	1
221	P221	N67	N679	N744	N742	gen_Steel	1
222	P222	N679	N68	N745	N744	gen_Steel	1
223	P223	N742	N744	N746	N90	gen_Steel	1
224	P224	N744	N745	N91	N746	gen_Steel	1
225	P225	N68	N682	N747	N745	gen_Steel	1
226	P226	N682	N69	N748	N747	gen_Steel	1
227	P227	N745	N747	N749	N91	gen_Steel	1
228	P228	N747	N748	N92	N749	gen_Steel	1
229	P229	N69	N685	N750	N748	gen_Steel	1
230	P230	N685	N70	N751	N750	gen_Steel	1
231	P231	N748	N750	N752	N92	gen_Steel	1
232	P232	N750	N751	N93	N752	gen_Steel	1
233	P233	N70	N688	N753	N751	gen_Steel	1
234	P234	N688	N71	N754	N753	gen_Steel	1
235	P235	N751	N753	N755	N93	gen_Steel	1
236	P236	N753	N754	N94	N755	gen_Steel	1
237	P237	N71	N691	N756	N754	gen_Steel	1
238	P238	N691	N72	N757	N756	gen_Steel	1
239	P239	N754	N756	N758	N94	gen_Steel	1
240	P240	N756	N757	N95	N758	gen_Steel	1
241	P241	N72	N694	N759	N757	gen_Steel	1
242	P242	N694	N73	N760	N759	gen_Steel	1
243	P243	N757	N759	N761	N95	gen_Steel	1
244	P244	N759	N760	N96	N761	gen_Steel	1
245	P245	N73	N697	N762	N760	gen_Steel	1
246	P246	N697	N74	N763	N762	gen_Steel	1
247	P247	N760	N762	N764	N96	gen_Steel	1
248	P248	N762	N763	N97	N764	gen_Steel	1
249	P249	N74	N700	N765	N763	gen_Steel	1
250	P250	N700	N75	N766	N765	gen_Steel	1
251	P251	N763	N765	N767	N97	gen_Steel	1
252	P252	N765	N766	N98	N767	gen_Steel	1
253	P253	N75	N703	N768	N766	gen_Steel	1

Plate Primary Data (Continued)

	Label	A Joint	B Joint	C Joint	D Joint	Material	Thickness[in]
254	P254	N703	N76	N769	N768	gen_Steel	1
255	P255	N766	N768	N770	N98	gen_Steel	1
256	P256	N768	N769	N99	N770	gen_Steel	1
257	P257	N76	N706	N771	N769	gen_Steel	1
258	P258	N706	N77	N772	N771	gen_Steel	1
259	P259	N769	N771	N773	N99	gen_Steel	1
260	P260	N771	N772	N100	N773	gen_Steel	1
261	P261	N77	N709	N774	N772	gen_Steel	1
262	P262	N709	N78	N775	N774	gen_Steel	1
263	P263	N772	N774	N776	N100	gen_Steel	1
264	P264	N774	N775	N101	N776	gen_Steel	1
265	P265	N78	N712	N777	N775	gen_Steel	1
266	P266	N712	N79	N778	N777	gen_Steel	1
267	P267	N775	N777	N779	N101	gen_Steel	1
268	P268	N777	N778	N102	N779	gen_Steel	1
269	P269	N80	N716	N781	N780	gen_Steel	1
270	P270	N716	N81	N782	N781	gen_Steel	1
271	P271	N780	N781	N783	N103	gen_Steel	1
272	P272	N781	N782	N104	N783	gen_Steel	1
273	P273	N81	N719	N784	N782	gen_Steel	1
274	P274	N719	N82	N785	N784	gen_Steel	1
275	P275	N782	N784	N786	N104	gen_Steel	1
276	P276	N784	N785	N105	N786	gen_Steel	1
277	P277	N82	N722	N787	N785	gen_Steel	1
278	P278	N722	N83	N788	N787	gen_Steel	1
279	P279	N785	N787	N789	N105	gen_Steel	1
280	P280	N787	N788	N106	N789	gen_Steel	1
281	P281	N83	N725	N790	N788	gen_Steel	1
282	P282	N725	N84	N791	N790	gen_Steel	1
283	P283	N788	N790	N792	N106	gen_Steel	1
284	P284	N790	N791	N107	N792	gen_Steel	1
285	P285	N84	N728	N793	N791	gen_Steel	1
286	P286	N728	N85	N794	N793	gen_Steel	1
287	P287	N791	N793	N795	N107	gen_Steel	1
288	P288	N793	N794	N108	N795	gen_Steel	1
289	P289	N85	N731	N796	N794	gen_Steel	1
290	P290	N731	N86	N797	N796	gen_Steel	1
291	P291	N794	N796	N798	N108	gen_Steel	1
292	P292	N796	N797	N109	N798	gen_Steel	1
293	P293	N86	N734	N799	N797	gen_Steel	1
294	P294	N734	N87	N800	N799	gen_Steel	1
295	P295	N797	N799	N801	N109	gen_Steel	1
296	P296	N799	N800	N110	N801	gen_Steel	1
297	P297	N87	N737	N802	N800	gen_Steel	1
298	P298	N737	N88	N803	N802	gen_Steel	1
299	P299	N800	N802	N804	N110	gen_Steel	1
300	P300	N802	N803	N111	N804	gen_Steel	1
301	P301	N88	N740	N805	N803	gen_Steel	1
302	P302	N740	N89	N806	N805	gen_Steel	1
303	P303	N803	N805	N807	N111	gen_Steel	1
304	P304	N805	N806	N112	N807	gen_Steel	1
305	P305	N89	N743	N808	N806	gen_Steel	1
306	P306	N743	N90	N809	N808	gen_Steel	1
307	P307	N806	N808	N810	N112	gen_Steel	1
308	P308	N808	N809	N113	N810	gen_Steel	1
309	P309	N90	N746	N811	N809	gen_Steel	1
310	P310	N746	N91	N812	N811	gen_Steel	1

Plate Primary Data (Continued)

	Label	A Joint	B Joint	C Joint	D Joint	Material	Thickness[in]
311	P311	N809	N811	N813	N113	gen_Steel	1
312	P312	N811	N812	N114	N813	gen_Steel	1
313	P313	N91	N749	N814	N812	gen_Steel	1
314	P314	N749	N92	N815	N814	gen_Steel	1
315	P315	N812	N814	N816	N114	gen_Steel	1
316	P316	N814	N815	N115	N816	gen_Steel	1
317	P317	N92	N752	N817	N815	gen_Steel	1
318	P318	N752	N93	N818	N817	gen_Steel	1
319	P319	N815	N817	N819	N115	gen_Steel	1
320	P320	N817	N818	N116	N819	gen_Steel	1
321	P321	N93	N755	N820	N818	gen_Steel	1
322	P322	N755	N94	N821	N820	gen_Steel	1
323	P323	N818	N820	N822	N116	gen_Steel	1
324	P324	N820	N821	N117	N822	gen_Steel	1
325	P325	N94	N758	N823	N821	gen_Steel	1
326	P326	N758	N95	N824	N823	gen_Steel	1
327	P327	N821	N823	N825	N117	gen_Steel	1
328	P328	N823	N824	N118	N825	gen_Steel	1
329	P329	N95	N761	N826	N824	gen_Steel	1
330	P330	N761	N96	N827	N826	gen_Steel	1
331	P331	N824	N826	N828	N118	gen_Steel	1
332	P332	N826	N827	N119	N828	gen_Steel	1
333	P333	N96	N764	N829	N827	gen_Steel	1
334	P334	N764	N97	N830	N829	gen_Steel	1
335	P335	N827	N829	N831	N119	gen_Steel	1
336	P336	N829	N830	N120	N831	gen_Steel	1
337	P337	N97	N767	N832	N830	gen_Steel	1
338	P338	N767	N98	N833	N832	gen_Steel	1
339	P339	N830	N832	N834	N120	gen_Steel	1
340	P340	N832	N833	N121	N834	gen_Steel	1
341	P341	N98	N770	N835	N833	gen_Steel	1
342	P342	N770	N99	N836	N835	gen_Steel	1
343	P343	N833	N835	N837	N121	gen_Steel	1
344	P344	N835	N836	N122	N837	gen_Steel	1
345	P345	N99	N773	N838	N836	gen_Steel	1
346	P346	N773	N100	N839	N838	gen_Steel	1
347	P347	N836	N838	N840	N122	gen_Steel	1
348	P348	N838	N839	N123	N840	gen_Steel	1
349	P349	N100	N776	N841	N839	gen_Steel	1
350	P350	N776	N101	N842	N841	gen_Steel	1
351	P351	N839	N841	N843	N123	gen_Steel	1
352	P352	N841	N842	N124	N843	gen_Steel	1
353	P353	N101	N779	N844	N842	gen_Steel	1
354	P354	N779	N102	N845	N844	gen_Steel	1
355	P355	N842	N844	N846	N124	gen_Steel	1
356	P356	N844	N845	N125	N846	gen_Steel	1
357	P357	N103	N783	N848	N847	gen_Steel	1
358	P358	N783	N104	N849	N848	gen_Steel	1
359	P359	N847	N848	N850	N126	gen_Steel	1
360	P360	N848	N849	N127	N850	gen_Steel	1
361	P361	N104	N786	N851	N849	gen_Steel	1
362	P362	N786	N105	N852	N851	gen_Steel	1
363	P363	N849	N851	N853	N127	gen_Steel	1
364	P364	N851	N852	N128	N853	gen_Steel	1
365	P365	N105	N789	N854	N852	gen_Steel	1
366	P366	N789	N106	N855	N854	gen_Steel	1
367	P367	N852	N854	N856	N128	gen_Steel	1

Plate Primary Data (Continued)

	Label	A Joint	B Joint	C Joint	D Joint	Material	Thickness[in]
368	P368	N854	N855	N129	N856	gen_Steel	1
369	P369	N106	N792	N857	N855	gen_Steel	1
370	P370	N792	N107	N858	N857	gen_Steel	1
371	P371	N855	N857	N859	N129	gen_Steel	1
372	P372	N857	N858	N130	N859	gen_Steel	1
373	P373	N107	N795	N860	N858	gen_Steel	1
374	P374	N795	N108	N861	N860	gen_Steel	1
375	P375	N858	N860	N862	N130	gen_Steel	1
376	P376	N860	N861	N131	N862	gen_Steel	1
377	P377	N108	N798	N863	N861	gen_Steel	1
378	P378	N798	N109	N864	N863	gen_Steel	1
379	P379	N861	N863	N865	N131	gen_Steel	1
380	P380	N863	N864	N132	N865	gen_Steel	1
381	P381	N109	N801	N866	N864	gen_Steel	1
382	P382	N801	N110	N867	N866	gen_Steel	1
383	P383	N864	N866	N868	N132	gen_Steel	1
384	P384	N866	N867	N133	N868	gen_Steel	1
385	P385	N110	N804	N869	N867	gen_Steel	1
386	P386	N804	N111	N870	N869	gen_Steel	1
387	P387	N867	N869	N871	N133	gen_Steel	1
388	P388	N869	N870	N134	N871	gen_Steel	1
389	P389	N111	N807	N872	N870	gen_Steel	1
390	P390	N807	N112	N873	N872	gen_Steel	1
391	P391	N870	N872	N874	N134	gen_Steel	1
392	P392	N872	N873	N135	N874	gen_Steel	1
393	P393	N112	N810	N875	N873	gen_Steel	1
394	P394	N810	N113	N876	N875	gen_Steel	1
395	P395	N873	N875	N877	N135	gen_Steel	1
396	P396	N875	N876	N136	N877	gen_Steel	1
397	P397	N113	N813	N878	N876	gen_Steel	1
398	P398	N813	N114	N879	N878	gen_Steel	1
399	P399	N876	N878	N880	N136	gen_Steel	1
400	P400	N878	N879	N137	N880	gen_Steel	1
401	P401	N114	N816	N881	N879	gen_Steel	1
402	P402	N816	N115	N882	N881	gen_Steel	1
403	P403	N879	N881	N883	N137	gen_Steel	1
404	P404	N881	N882	N138	N883	gen_Steel	1
405	P405	N115	N819	N884	N882	gen_Steel	1
406	P406	N819	N116	N885	N884	gen_Steel	1
407	P407	N882	N884	N886	N138	gen_Steel	1
408	P408	N884	N885	N139	N886	gen_Steel	1
409	P409	N116	N822	N887	N885	gen_Steel	1
410	P410	N822	N117	N888	N887	gen_Steel	1
411	P411	N885	N887	N889	N139	gen_Steel	1
412	P412	N887	N888	N140	N889	gen_Steel	1
413	P413	N117	N825	N890	N888	gen_Steel	1
414	P414	N825	N118	N891	N890	gen_Steel	1
415	P415	N888	N890	N892	N140	gen_Steel	1
416	P416	N890	N891	N141	N892	gen_Steel	1
417	P417	N118	N828	N893	N891	gen_Steel	1
418	P418	N828	N119	N894	N893	gen_Steel	1
419	P419	N891	N893	N895	N141	gen_Steel	1
420	P420	N893	N894	N142	N895	gen_Steel	1
421	P421	N119	N831	N896	N894	gen_Steel	1
422	P422	N831	N120	N897	N896	gen_Steel	1
423	P423	N894	N896	N898	N142	gen_Steel	1
424	P424	N896	N897	N143	N898	gen_Steel	1

Plate Primary Data (Continued)

	Label	A Joint	B Joint	C Joint	D Joint	Material	Thickness[in]
425	P425	N120	N834	N899	N897	gen_Steel	1
426	P426	N834	N121	N900	N899	gen_Steel	1
427	P427	N897	N899	N901	N143	gen_Steel	1
428	P428	N899	N900	N144	N901	gen_Steel	1
429	P429	N121	N837	N902	N900	gen_Steel	1
430	P430	N837	N122	N903	N902	gen_Steel	1
431	P431	N900	N902	N904	N144	gen_Steel	1
432	P432	N902	N903	N145	N904	gen_Steel	1
433	P433	N122	N840	N905	N903	gen_Steel	1
434	P434	N840	N123	N906	N905	gen_Steel	1
435	P435	N903	N905	N907	N145	gen_Steel	1
436	P436	N905	N906	N146	N907	gen_Steel	1
437	P437	N123	N843	N908	N906	gen_Steel	1
438	P438	N843	N124	N909	N908	gen_Steel	1
439	P439	N906	N908	N910	N146	gen_Steel	1
440	P440	N908	N909	N147	N910	gen_Steel	1
441	P441	N124	N846	N911	N909	gen_Steel	1
442	P442	N846	N125	N912	N911	gen_Steel	1
443	P443	N909	N911	N913	N147	gen_Steel	1
444	P444	N911	N912	N148	N913	gen_Steel	1
445	P445	N126	N850	N915	N914	gen_Steel	1
446	P446	N850	N127	N916	N915	gen_Steel	1
447	P447	N914	N915	N917	N149	gen_Steel	1
448	P448	N915	N916	N150	N917	gen_Steel	1
449	P449	N127	N853	N918	N916	gen_Steel	1
450	P450	N853	N128	N919	N918	gen_Steel	1
451	P451	N916	N918	N920	N150	gen_Steel	1
452	P452	N918	N919	N151	N920	gen_Steel	1
453	P453	N128	N856	N921	N919	gen_Steel	1
454	P454	N856	N129	N922	N921	gen_Steel	1
455	P455	N919	N921	N923	N151	gen_Steel	1
456	P456	N921	N922	N152	N923	gen_Steel	1
457	P457	N129	N859	N924	N922	gen_Steel	1
458	P458	N859	N130	N925	N924	gen_Steel	1
459	P459	N922	N924	N926	N152	gen_Steel	1
460	P460	N924	N925	N153	N926	gen_Steel	1
461	P461	N130	N862	N927	N925	gen_Steel	1
462	P462	N862	N131	N928	N927	gen_Steel	1
463	P463	N925	N927	N929	N153	gen_Steel	1
464	P464	N927	N928	N154	N929	gen_Steel	1
465	P465	N131	N865	N930	N928	gen_Steel	1
466	P466	N865	N132	N931	N930	gen_Steel	1
467	P467	N928	N930	N932	N154	gen_Steel	1
468	P468	N930	N931	N155	N932	gen_Steel	1
469	P469	N132	N868	N933	N931	gen_Steel	1
470	P470	N868	N133	N934	N933	gen_Steel	1
471	P471	N931	N933	N935	N155	gen_Steel	1
472	P472	N933	N934	N156	N935	gen_Steel	1
473	P473	N133	N871	N936	N934	gen_Steel	1
474	P474	N871	N134	N937	N936	gen_Steel	1
475	P475	N934	N936	N938	N156	gen_Steel	1
476	P476	N936	N937	N157	N938	gen_Steel	1
477	P477	N134	N874	N939	N937	gen_Steel	1
478	P478	N874	N135	N940	N939	gen_Steel	1
479	P479	N937	N939	N941	N157	gen_Steel	1
480	P480	N939	N940	N158	N941	gen_Steel	1
481	P481	N135	N877	N942	N940	gen_Steel	1

Plate Primary Data (Continued)

	Label	A Joint	B Joint	C Joint	D Joint	Material	Thickness[in]
482	P482	N877	N136	N943	N942	gen_Steel	1
483	P483	N940	N942	N944	N158	gen_Steel	1
484	P484	N942	N943	N159	N944	gen_Steel	1
485	P485	N136	N880	N945	N943	gen_Steel	1
486	P486	N880	N137	N946	N945	gen_Steel	1
487	P487	N943	N945	N947	N159	gen_Steel	1
488	P488	N945	N946	N160	N947	gen_Steel	1
489	P489	N137	N883	N948	N946	gen_Steel	1
490	P490	N883	N138	N949	N948	gen_Steel	1
491	P491	N946	N948	N950	N160	gen_Steel	1
492	P492	N948	N949	N161	N950	gen_Steel	1
493	P493	N138	N886	N951	N949	gen_Steel	1
494	P494	N886	N139	N952	N951	gen_Steel	1
495	P495	N949	N951	N953	N161	gen_Steel	1
496	P496	N951	N952	N162	N953	gen_Steel	1
497	P497	N139	N889	N954	N952	gen_Steel	1
498	P498	N889	N140	N955	N954	gen_Steel	1
499	P499	N952	N954	N956	N162	gen_Steel	1
500	P500	N954	N955	N163	N956	gen_Steel	1
501	P501	N140	N892	N957	N955	gen_Steel	1
502	P502	N892	N141	N958	N957	gen_Steel	1
503	P503	N955	N957	N959	N163	gen_Steel	1
504	P504	N957	N958	N164	N959	gen_Steel	1
505	P505	N141	N895	N960	N958	gen_Steel	1
506	P506	N895	N142	N961	N960	gen_Steel	1
507	P507	N958	N960	N962	N164	gen_Steel	1
508	P508	N960	N961	N165	N962	gen_Steel	1
509	P509	N142	N898	N963	N961	gen_Steel	1
510	P510	N898	N143	N964	N963	gen_Steel	1
511	P511	N961	N963	N965	N165	gen_Steel	1
512	P512	N963	N964	N166	N965	gen_Steel	1
513	P513	N143	N901	N966	N964	gen_Steel	1
514	P514	N901	N144	N967	N966	gen_Steel	1
515	P515	N964	N966	N968	N166	gen_Steel	1
516	P516	N966	N967	N167	N968	gen_Steel	1
517	P517	N144	N904	N969	N967	gen_Steel	1
518	P518	N904	N145	N970	N969	gen_Steel	1
519	P519	N967	N969	N971	N167	gen_Steel	1
520	P520	N969	N970	N168	N971	gen_Steel	1
521	P521	N145	N907	N972	N970	gen_Steel	1
522	P522	N907	N146	N973	N972	gen_Steel	1
523	P523	N970	N972	N974	N168	gen_Steel	1
524	P524	N972	N973	N169	N974	gen_Steel	1
525	P525	N146	N910	N975	N973	gen_Steel	1
526	P526	N910	N147	N976	N975	gen_Steel	1
527	P527	N973	N975	N977	N169	gen_Steel	1
528	P528	N975	N976	N170	N977	gen_Steel	1
529	P529	N147	N913	N978	N976	gen_Steel	1
530	P530	N913	N148	N979	N978	gen_Steel	1
531	P531	N976	N978	N980	N170	gen_Steel	1
532	P532	N978	N979	N171	N980	gen_Steel	1
533	P533	N149	N917	N982	N981	gen_Steel	1
534	P534	N917	N150	N983	N982	gen_Steel	1
535	P535	N981	N982	N984	N172	gen_Steel	1
536	P536	N982	N983	N173	N984	gen_Steel	1
537	P537	N150	N920	N985	N983	gen_Steel	1
538	P538	N920	N151	N986	N985	gen_Steel	1

Plate Primary Data (Continued)

	Label	A Joint	B Joint	C Joint	D Joint	Material	Thickness[in]
539	P539	N983	N985	N987	N173	gen_Steel	1
540	P540	N985	N986	N174	N987	gen_Steel	1
541	P541	N151	N923	N988	N986	gen_Steel	1
542	P542	N923	N152	N989	N988	gen_Steel	1
543	P543	N986	N988	N990	N174	gen_Steel	1
544	P544	N988	N989	N175	N990	gen_Steel	1
545	P545	N152	N926	N991	N989	gen_Steel	1
546	P546	N926	N153	N992	N991	gen_Steel	1
547	P547	N989	N991	N993	N175	gen_Steel	1
548	P548	N991	N992	N176	N993	gen_Steel	1
549	P549	N153	N929	N994	N992	gen_Steel	1
550	P550	N929	N154	N995	N994	gen_Steel	1
551	P551	N992	N994	N996	N176	gen_Steel	1
552	P552	N994	N995	N177	N996	gen_Steel	1
553	P553	N154	N932	N997	N995	gen_Steel	1
554	P554	N932	N155	N998	N997	gen_Steel	1
555	P555	N995	N997	N999	N177	gen_Steel	1
556	P556	N997	N998	N178	N999	gen_Steel	1
557	P557	N155	N935	N1000	N998	gen_Steel	1
558	P558	N935	N156	N1001	N1000	gen_Steel	1
559	P559	N998	N1000	N1002	N178	gen_Steel	1
560	P560	N1000	N1001	N179	N1002	gen_Steel	1
561	P561	N156	N938	N1003	N1001	gen_Steel	1
562	P562	N938	N157	N1004	N1003	gen_Steel	1
563	P563	N1001	N1003	N1005	N179	gen_Steel	1
564	P564	N1003	N1004	N180	N1005	gen_Steel	1
565	P565	N157	N941	N1006	N1004	gen_Steel	1
566	P566	N941	N158	N1007	N1006	gen_Steel	1
567	P567	N1004	N1006	N1008	N180	gen_Steel	1
568	P568	N1006	N1007	N181	N1008	gen_Steel	1
569	P569	N158	N944	N1009	N1007	gen_Steel	1
570	P570	N944	N159	N1010	N1009	gen_Steel	1
571	P571	N1007	N1009	N1011	N181	gen_Steel	1
572	P572	N1009	N1010	N182	N1011	gen_Steel	1
573	P573	N159	N947	N1012	N1010	gen_Steel	1
574	P574	N947	N160	N1013	N1012	gen_Steel	1
575	P575	N1010	N1012	N1014	N182	gen_Steel	1
576	P576	N1012	N1013	N183	N1014	gen_Steel	1
577	P577	N160	N950	N1015	N1013	gen_Steel	1
578	P578	N950	N161	N1016	N1015	gen_Steel	1
579	P579	N1013	N1015	N1017	N183	gen_Steel	1
580	P580	N1015	N1016	N184	N1017	gen_Steel	1
581	P581	N161	N953	N1018	N1016	gen_Steel	1
582	P582	N953	N162	N1019	N1018	gen_Steel	1
583	P583	N1016	N1018	N1020	N184	gen_Steel	1
584	P584	N1018	N1019	N185	N1020	gen_Steel	1
585	P585	N162	N956	N1021	N1019	gen_Steel	1
586	P586	N956	N163	N1022	N1021	gen_Steel	1
587	P587	N1019	N1021	N1023	N185	gen_Steel	1
588	P588	N1021	N1022	N186	N1023	gen_Steel	1
589	P589	N163	N959	N1024	N1022	gen_Steel	1
590	P590	N959	N164	N1025	N1024	gen_Steel	1
591	P591	N1022	N1024	N1026	N186	gen_Steel	1
592	P592	N1024	N1025	N187	N1026	gen_Steel	1
593	P593	N164	N962	N1027	N1025	gen_Steel	1
594	P594	N962	N165	N1028	N1027	gen_Steel	1
595	P595	N1025	N1027	N1029	N187	gen_Steel	1

Plate Primary Data (Continued)

	Label	A Joint	B Joint	C Joint	D Joint	Material	Thickness[in]
596	P596	N1027	N1028	N188	N1029	gen_Steel	1
597	P597	N165	N965	N1030	N1028	gen_Steel	1
598	P598	N965	N166	N1031	N1030	gen_Steel	1
599	P599	N1028	N1030	N1032	N188	gen_Steel	1
600	P600	N1030	N1031	N189	N1032	gen_Steel	1
601	P601	N166	N968	N1033	N1031	gen_Steel	1
602	P602	N968	N167	N1034	N1033	gen_Steel	1
603	P603	N1031	N1033	N1035	N189	gen_Steel	1
604	P604	N1033	N1034	N190	N1035	gen_Steel	1
605	P605	N167	N971	N1036	N1034	gen_Steel	1
606	P606	N971	N168	N1037	N1036	gen_Steel	1
607	P607	N1034	N1036	N1038	N190	gen_Steel	1
608	P608	N1036	N1037	N191	N1038	gen_Steel	1
609	P609	N168	N974	N1039	N1037	gen_Steel	1
610	P610	N974	N169	N1040	N1039	gen_Steel	1
611	P611	N1037	N1039	N1041	N191	gen_Steel	1
612	P612	N1039	N1040	N192	N1041	gen_Steel	1
613	P613	N169	N977	N1042	N1040	gen_Steel	1
614	P614	N977	N170	N1043	N1042	gen_Steel	1
615	P615	N1040	N1042	N1044	N192	gen_Steel	1
616	P616	N1042	N1043	N193	N1044	gen_Steel	1
617	P617	N170	N980	N1045	N1043	gen_Steel	1
618	P618	N980	N171	N1046	N1045	gen_Steel	1
619	P619	N1043	N1045	N1047	N193	gen_Steel	1
620	P620	N1045	N1046	N194	N1047	gen_Steel	1
621	P621	N172	N984	N1049	N1048	gen_Steel	1
622	P622	N984	N173	N1050	N1049	gen_Steel	1
623	P623	N1048	N1049	N1051	N195	gen_Steel	1
624	P624	N1049	N1050	N196	N1051	gen_Steel	1
625	P625	N173	N987	N1052	N1050	gen_Steel	1
626	P626	N987	N174	N1053	N1052	gen_Steel	1
627	P627	N1050	N1052	N1054	N196	gen_Steel	1
628	P628	N1052	N1053	N197	N1054	gen_Steel	1
629	P629	N174	N990	N1055	N1053	gen_Steel	1
630	P630	N990	N175	N1056	N1055	gen_Steel	1
631	P631	N1053	N1055	N1057	N197	gen_Steel	1
632	P632	N1055	N1056	N198	N1057	gen_Steel	1
633	P633	N175	N993	N1058	N1056	gen_Steel	1
634	P634	N993	N176	N1059	N1058	gen_Steel	1
635	P635	N1056	N1058	N1060	N198	gen_Steel	1
636	P636	N1058	N1059	N199	N1060	gen_Steel	1
637	P637	N176	N996	N1061	N1059	gen_Steel	1
638	P638	N996	N177	N1062	N1061	gen_Steel	1
639	P639	N1059	N1061	N1063	N199	gen_Steel	1
640	P640	N1061	N1062	N200	N1063	gen_Steel	1
641	P641	N177	N999	N1064	N1062	gen_Steel	1
642	P642	N999	N178	N1065	N1064	gen_Steel	1
643	P643	N1062	N1064	N1066	N200	gen_Steel	1
644	P644	N1064	N1065	N201	N1066	gen_Steel	1
645	P645	N178	N1002	N1067	N1065	gen_Steel	1
646	P646	N1002	N179	N1068	N1067	gen_Steel	1
647	P647	N1065	N1067	N1069	N201	gen_Steel	1
648	P648	N1067	N1068	N202	N1069	gen_Steel	1
649	P649	N179	N1005	N1070	N1068	gen_Steel	1
650	P650	N1005	N180	N1071	N1070	gen_Steel	1
651	P651	N1068	N1070	N1072	N202	gen_Steel	1
652	P652	N1070	N1071	N203	N1072	gen_Steel	1

Plate Primary Data (Continued)

	Label	A Joint	B Joint	C Joint	D Joint	Material	Thickness[in]
653	P653	N180	N1008	N1073	N1071	gen_Steel	1
654	P654	N1008	N181	N1074	N1073	gen_Steel	1
655	P655	N1071	N1073	N1075	N203	gen_Steel	1
656	P656	N1073	N1074	N204	N1075	gen_Steel	1
657	P657	N181	N1011	N1076	N1074	gen_Steel	1
658	P658	N1011	N182	N1077	N1076	gen_Steel	1
659	P659	N1074	N1076	N1078	N204	gen_Steel	1
660	P660	N1076	N1077	N205	N1078	gen_Steel	1
661	P661	N182	N1014	N1079	N1077	gen_Steel	1
662	P662	N1014	N183	N1080	N1079	gen_Steel	1
663	P663	N1077	N1079	N1081	N205	gen_Steel	1
664	P664	N1079	N1080	N206	N1081	gen_Steel	1
665	P665	N183	N1017	N1082	N1080	gen_Steel	1
666	P666	N1017	N184	N1083	N1082	gen_Steel	1
667	P667	N1080	N1082	N1084	N206	gen_Steel	1
668	P668	N1082	N1083	N207	N1084	gen_Steel	1
669	P669	N184	N1020	N1085	N1083	gen_Steel	1
670	P670	N1020	N185	N1086	N1085	gen_Steel	1
671	P671	N1083	N1085	N1087	N207	gen_Steel	1
672	P672	N1085	N1086	N208	N1087	gen_Steel	1
673	P673	N185	N1023	N1088	N1086	gen_Steel	1
674	P674	N1023	N186	N1089	N1088	gen_Steel	1
675	P675	N1086	N1088	N1090	N208	gen_Steel	1
676	P676	N1088	N1089	N209	N1090	gen_Steel	1
677	P677	N186	N1026	N1091	N1089	gen_Steel	1
678	P678	N1026	N187	N1092	N1091	gen_Steel	1
679	P679	N1089	N1091	N1093	N209	gen_Steel	1
680	P680	N1091	N1092	N210	N1093	gen_Steel	1
681	P681	N187	N1029	N1094	N1092	gen_Steel	1
682	P682	N1029	N188	N1095	N1094	gen_Steel	1
683	P683	N1092	N1094	N1096	N210	gen_Steel	1
684	P684	N1094	N1095	N211	N1096	gen_Steel	1
685	P685	N188	N1032	N1097	N1095	gen_Steel	1
686	P686	N1032	N189	N1098	N1097	gen_Steel	1
687	P687	N1095	N1097	N1099	N211	gen_Steel	1
688	P688	N1097	N1098	N212	N1099	gen_Steel	1
689	P689	N189	N1035	N1100	N1098	gen_Steel	1
690	P690	N1035	N190	N1101	N1100	gen_Steel	1
691	P691	N1098	N1100	N1102	N212	gen_Steel	1
692	P692	N1100	N1101	N213	N1102	gen_Steel	1
693	P693	N190	N1038	N1103	N1101	gen_Steel	1
694	P694	N1038	N191	N1104	N1103	gen_Steel	1
695	P695	N1101	N1103	N1105	N213	gen_Steel	1
696	P696	N1103	N1104	N214	N1105	gen_Steel	1
697	P697	N191	N1041	N1106	N1104	gen_Steel	1
698	P698	N1041	N192	N1107	N1106	gen_Steel	1
699	P699	N1104	N1106	N1108	N214	gen_Steel	1
700	P700	N1106	N1107	N215	N1108	gen_Steel	1
701	P701	N192	N1044	N1109	N1107	gen_Steel	1
702	P702	N1044	N193	N1110	N1109	gen_Steel	1
703	P703	N1107	N1109	N1111	N215	gen_Steel	1
704	P704	N1109	N1110	N216	N1111	gen_Steel	1
705	P705	N193	N1047	N1112	N1110	gen_Steel	1
706	P706	N1047	N194	N1113	N1112	gen_Steel	1
707	P707	N1110	N1112	N1114	N216	gen_Steel	1
708	P708	N1112	N1113	N217	N1114	gen_Steel	1
709	P709	N195	N1051	N1116	N1115	gen_Steel	1

Plate Primary Data (Continued)

	Label	A Joint	B Joint	C Joint	D Joint	Material	Thickness[in]
710	P710	N1051	N196	N1117	N1116	gen_Steel	1
711	P711	N1115	N1116	N1118	N218	gen_Steel	1
712	P712	N1116	N1117	N219	N1118	gen_Steel	1
713	P713	N196	N1054	N1119	N1117	gen_Steel	1
714	P714	N1054	N197	N1120	N1119	gen_Steel	1
715	P715	N1117	N1119	N1121	N219	gen_Steel	1
716	P716	N1119	N1120	N220	N1121	gen_Steel	1
717	P717	N197	N1057	N1122	N1120	gen_Steel	1
718	P718	N1057	N198	N1123	N1122	gen_Steel	1
719	P719	N1120	N1122	N1124	N220	gen_Steel	1
720	P720	N1122	N1123	N221	N1124	gen_Steel	1
721	P721	N198	N1060	N1125	N1123	gen_Steel	1
722	P722	N1060	N199	N1126	N1125	gen_Steel	1
723	P723	N1123	N1125	N1127	N221	gen_Steel	1
724	P724	N1125	N1126	N222	N1127	gen_Steel	1
725	P725	N199	N1063	N1128	N1126	gen_Steel	1
726	P726	N1063	N200	N1129	N1128	gen_Steel	1
727	P727	N1126	N1128	N1130	N222	gen_Steel	1
728	P728	N1128	N1129	N223	N1130	gen_Steel	1
729	P729	N200	N1066	N1131	N1129	gen_Steel	1
730	P730	N1066	N201	N1132	N1131	gen_Steel	1
731	P731	N1129	N1131	N1133	N223	gen_Steel	1
732	P732	N1131	N1132	N224	N1133	gen_Steel	1
733	P733	N201	N1069	N1134	N1132	gen_Steel	1
734	P734	N1069	N202	N1135	N1134	gen_Steel	1
735	P735	N1132	N1134	N1136	N224	gen_Steel	1
736	P736	N1134	N1135	N225	N1136	gen_Steel	1
737	P737	N202	N1072	N1137	N1135	gen_Steel	1
738	P738	N1072	N203	N1138	N1137	gen_Steel	1
739	P739	N1135	N1137	N1139	N225	gen_Steel	1
740	P740	N1137	N1138	N226	N1139	gen_Steel	1
741	P741	N203	N1075	N1140	N1138	gen_Steel	1
742	P742	N1075	N204	N1141	N1140	gen_Steel	1
743	P743	N1138	N1140	N1142	N226	gen_Steel	1
744	P744	N1140	N1141	N227	N1142	gen_Steel	1
745	P745	N208	N1090	N1144	N1143	gen_Steel	1
746	P746	N1090	N209	N1145	N1144	gen_Steel	1
747	P747	N1143	N1144	N1146	N228	gen_Steel	1
748	P748	N1144	N1145	N229	N1146	gen_Steel	1
749	P749	N209	N1093	N1147	N1145	gen_Steel	1
750	P750	N1093	N210	N1148	N1147	gen_Steel	1
751	P751	N1145	N1147	N1149	N229	gen_Steel	1
752	P752	N1147	N1148	N230	N1149	gen_Steel	1
753	P753	N210	N1096	N1150	N1148	gen_Steel	1
754	P754	N1096	N211	N1151	N1150	gen_Steel	1
755	P755	N1148	N1150	N1152	N230	gen_Steel	1
756	P756	N1150	N1151	N231	N1152	gen_Steel	1
757	P757	N211	N1099	N1153	N1151	gen_Steel	1
758	P758	N1099	N212	N1154	N1153	gen_Steel	1
759	P759	N1151	N1153	N1155	N231	gen_Steel	1
760	P760	N1153	N1154	N232	N1155	gen_Steel	1
761	P761	N212	N1102	N1156	N1154	gen_Steel	1
762	P762	N1102	N213	N1157	N1156	gen_Steel	1
763	P763	N1154	N1156	N1158	N232	gen_Steel	1
764	P764	N1156	N1157	N233	N1158	gen_Steel	1
765	P765	N213	N1105	N1159	N1157	gen_Steel	1
766	P766	N1105	N214	N1160	N1159	gen_Steel	1

Plate Primary Data (Continued)

	Label	A Joint	B Joint	C Joint	D Joint	Material	Thickness[in]
767	P767	N1157	N1159	N1161	N233	gen_Steel	1
768	P768	N1159	N1160	N234	N1161	gen_Steel	1
769	P769	N214	N1108	N1162	N1160	gen_Steel	1
770	P770	N1108	N215	N1163	N1162	gen_Steel	1
771	P771	N1160	N1162	N1164	N234	gen_Steel	1
772	P772	N1162	N1163	N235	N1164	gen_Steel	1
773	P773	N215	N1111	N1165	N1163	gen_Steel	1
774	P774	N1111	N216	N1166	N1165	gen_Steel	1
775	P775	N1163	N1165	N1167	N235	gen_Steel	1
776	P776	N1165	N1166	N236	N1167	gen_Steel	1
777	P777	N216	N1114	N1168	N1166	gen_Steel	1
778	P778	N1114	N217	N1169	N1168	gen_Steel	1
779	P779	N1166	N1168	N1170	N236	gen_Steel	1
780	P780	N1168	N1169	N237	N1170	gen_Steel	1
781	P781	N218	N1118	N1172	N1171	gen_Steel	1
782	P782	N1118	N219	N1173	N1172	gen_Steel	1
783	P783	N1171	N1172	N1174	N238	gen_Steel	1
784	P784	N1172	N1173	N239	N1174	gen_Steel	1
785	P785	N219	N1121	N1175	N1173	gen_Steel	1
786	P786	N1121	N220	N1176	N1175	gen_Steel	1
787	P787	N1173	N1175	N1177	N239	gen_Steel	1
788	P788	N1175	N1176	N240	N1177	gen_Steel	1
789	P789	N220	N1124	N1178	N1176	gen_Steel	1
790	P790	N1124	N221	N1179	N1178	gen_Steel	1
791	P791	N1176	N1178	N1180	N240	gen_Steel	1
792	P792	N1178	N1179	N241	N1180	gen_Steel	1
793	P793	N221	N1127	N1181	N1179	gen_Steel	1
794	P794	N1127	N222	N1182	N1181	gen_Steel	1
795	P795	N1179	N1181	N1183	N241	gen_Steel	1
796	P796	N1181	N1182	N242	N1183	gen_Steel	1
797	P797	N222	N1130	N1184	N1182	gen_Steel	1
798	P798	N1130	N223	N1185	N1184	gen_Steel	1
799	P799	N1182	N1184	N1186	N242	gen_Steel	1
800	P800	N1184	N1185	N243	N1186	gen_Steel	1
801	P801	N223	N1133	N1187	N1185	gen_Steel	1
802	P802	N1133	N224	N1188	N1187	gen_Steel	1
803	P803	N1185	N1187	N1189	N243	gen_Steel	1
804	P804	N1187	N1188	N244	N1189	gen_Steel	1
805	P805	N224	N1136	N1190	N1188	gen_Steel	1
806	P806	N1136	N225	N1191	N1190	gen_Steel	1
807	P807	N1188	N1190	N1192	N244	gen_Steel	1
808	P808	N1190	N1191	N245	N1192	gen_Steel	1
809	P809	N225	N1139	N1193	N1191	gen_Steel	1
810	P810	N1139	N226	N1194	N1193	gen_Steel	1
811	P811	N1191	N1193	N1195	N245	gen_Steel	1
812	P812	N1193	N1194	N246	N1195	gen_Steel	1
813	P813	N229	N1149	N1197	N1196	gen_Steel	1
814	P814	N1149	N230	N1198	N1197	gen_Steel	1
815	P815	N1196	N1197	N1199	N247	gen_Steel	1
816	P816	N1197	N1198	N248	N1199	gen_Steel	1
817	P817	N230	N1152	N1200	N1198	gen_Steel	1
818	P818	N1152	N231	N1201	N1200	gen_Steel	1
819	P819	N1198	N1200	N1202	N248	gen_Steel	1
820	P820	N1200	N1201	N249	N1202	gen_Steel	1
821	P821	N231	N1155	N1203	N1201	gen_Steel	1
822	P822	N1155	N232	N1204	N1203	gen_Steel	1
823	P823	N1201	N1203	N1205	N249	gen_Steel	1

Plate Primary Data (Continued)

	Label	A Joint	B Joint	C Joint	D Joint	Material	Thickness[in]
824	P824	N1203	N1204	N250	N1205	gen_Steel	1
825	P825	N232	N1158	N1206	N1204	gen_Steel	1
826	P826	N1158	N233	N1207	N1206	gen_Steel	1
827	P827	N1204	N1206	N1208	N250	gen_Steel	1
828	P828	N1206	N1207	N251	N1208	gen_Steel	1
829	P829	N233	N1161	N1209	N1207	gen_Steel	1
830	P830	N1161	N234	N1210	N1209	gen_Steel	1
831	P831	N1207	N1209	N1211	N251	gen_Steel	1
832	P832	N1209	N1210	N252	N1211	gen_Steel	1
833	P833	N234	N1164	N1212	N1210	gen_Steel	1
834	P834	N1164	N235	N1213	N1212	gen_Steel	1
835	P835	N1210	N1212	N1214	N252	gen_Steel	1
836	P836	N1212	N1213	N253	N1214	gen_Steel	1
837	P837	N235	N1167	N1215	N1213	gen_Steel	1
838	P838	N1167	N236	N1216	N1215	gen_Steel	1
839	P839	N1213	N1215	N1217	N253	gen_Steel	1
840	P840	N1215	N1216	N254	N1217	gen_Steel	1
841	P841	N236	N1170	N1218	N1216	gen_Steel	1
842	P842	N1170	N237	N1219	N1218	gen_Steel	1
843	P843	N1216	N1218	N1220	N254	gen_Steel	1
844	P844	N1218	N1219	N255	N1220	gen_Steel	1
845	P845	N238	N1174	N1222	N1221	gen_Steel	1
846	P846	N1174	N239	N1223	N1222	gen_Steel	1
847	P847	N1221	N1222	N1224	N256	gen_Steel	1
848	P848	N1222	N1223	N257	N1224	gen_Steel	1
849	P849	N239	N1177	N1225	N1223	gen_Steel	1
850	P850	N1177	N240	N1226	N1225	gen_Steel	1
851	P851	N1223	N1225	N1227	N257	gen_Steel	1
852	P852	N1225	N1226	N258	N1227	gen_Steel	1
853	P853	N240	N1180	N1228	N1226	gen_Steel	1
854	P854	N1180	N241	N1229	N1228	gen_Steel	1
855	P855	N1226	N1228	N1230	N258	gen_Steel	1
856	P856	N1228	N1229	N259	N1230	gen_Steel	1
857	P857	N241	N1183	N1231	N1229	gen_Steel	1
858	P858	N1183	N242	N1232	N1231	gen_Steel	1
859	P859	N1229	N1231	N1233	N259	gen_Steel	1
860	P860	N1231	N1232	N260	N1233	gen_Steel	1
861	P861	N242	N1186	N1234	N1232	gen_Steel	1
862	P862	N1186	N243	N1235	N1234	gen_Steel	1
863	P863	N1232	N1234	N1236	N260	gen_Steel	1
864	P864	N1234	N1235	N261	N1236	gen_Steel	1
865	P865	N243	N1189	N1237	N1235	gen_Steel	1
866	P866	N1189	N244	N1238	N1237	gen_Steel	1
867	P867	N1235	N1237	N1239	N261	gen_Steel	1
868	P868	N1237	N1238	N262	N1239	gen_Steel	1
869	P869	N244	N1192	N1240	N1238	gen_Steel	1
870	P870	N1192	N245	N1241	N1240	gen_Steel	1
871	P871	N1238	N1240	N1242	N262	gen_Steel	1
872	P872	N1240	N1241	N263	N1242	gen_Steel	1
873	P873	N245	N1195	N1243	N1241	gen_Steel	1
874	P874	N1195	N246	N1244	N1243	gen_Steel	1
875	P875	N1241	N1243	N1245	N263	gen_Steel	1
876	P876	N1243	N1244	N264	N1245	gen_Steel	1
877	P877	N247	N1199	N1247	N1246	gen_Steel	1
878	P878	N1199	N248	N1248	N1247	gen_Steel	1
879	P879	N1246	N1247	N1249	N265	gen_Steel	1
880	P880	N1247	N1248	N266	N1249	gen_Steel	1

Plate Primary Data (Continued)

	Label	A Joint	B Joint	C Joint	D Joint	Material	Thickness[in]
881	P881	N248	N1202	N1250	N1248	gen_Steel	1
882	P882	N1202	N249	N1251	N1250	gen_Steel	1
883	P883	N1248	N1250	N1252	N266	gen_Steel	1
884	P884	N1250	N1251	N267	N1252	gen_Steel	1
885	P885	N249	N1205	N1253	N1251	gen_Steel	1
886	P886	N1205	N250	N1254	N1253	gen_Steel	1
887	P887	N1251	N1253	N1255	N267	gen_Steel	1
888	P888	N1253	N1254	N268	N1255	gen_Steel	1
889	P889	N250	N1208	N1256	N1254	gen_Steel	1
890	P890	N1208	N251	N1257	N1256	gen_Steel	1
891	P891	N1254	N1256	N1258	N268	gen_Steel	1
892	P892	N1256	N1257	N269	N1258	gen_Steel	1
893	P893	N251	N1211	N1259	N1257	gen_Steel	1
894	P894	N1211	N252	N1260	N1259	gen_Steel	1
895	P895	N1257	N1259	N1261	N269	gen_Steel	1
896	P896	N1259	N1260	N270	N1261	gen_Steel	1
897	P897	N252	N1214	N1262	N1260	gen_Steel	1
898	P898	N1214	N253	N1263	N1262	gen_Steel	1
899	P899	N1260	N1262	N1264	N270	gen_Steel	1
900	P900	N1262	N1263	N271	N1264	gen_Steel	1
901	P901	N253	N1217	N1265	N1263	gen_Steel	1
902	P902	N1217	N254	N1266	N1265	gen_Steel	1
903	P903	N1263	N1265	N1267	N271	gen_Steel	1
904	P904	N1265	N1266	N272	N1267	gen_Steel	1
905	P905	N254	N1220	N1268	N1266	gen_Steel	1
906	P906	N1220	N255	N1269	N1268	gen_Steel	1
907	P907	N1266	N1268	N1270	N272	gen_Steel	1
908	P908	N1268	N1269	N273	N1270	gen_Steel	1
909	P909	N256	N1224	N1272	N1271	gen_Steel	1
910	P910	N1224	N257	N1273	N1272	gen_Steel	1
911	P911	N1271	N1272	N1274	N274	gen_Steel	1
912	P912	N1272	N1273	N275	N1274	gen_Steel	1
913	P913	N257	N1227	N1275	N1273	gen_Steel	1
914	P914	N1227	N258	N1276	N1275	gen_Steel	1
915	P915	N1273	N1275	N1277	N275	gen_Steel	1
916	P916	N1275	N1276	N276	N1277	gen_Steel	1
917	P917	N258	N1230	N1278	N1276	gen_Steel	1
918	P918	N1230	N259	N1279	N1278	gen_Steel	1
919	P919	N1276	N1278	N1280	N276	gen_Steel	1
920	P920	N1278	N1279	N277	N1280	gen_Steel	1
921	P921	N259	N1233	N1281	N1279	gen_Steel	1
922	P922	N1233	N260	N1282	N1281	gen_Steel	1
923	P923	N1279	N1281	N1283	N277	gen_Steel	1
924	P924	N1281	N1282	N278	N1283	gen_Steel	1
925	P925	N260	N1236	N1284	N1282	gen_Steel	1
926	P926	N1236	N261	N1285	N1284	gen_Steel	1
927	P927	N1282	N1284	N1286	N278	gen_Steel	1
928	P928	N1284	N1285	N279	N1286	gen_Steel	1
929	P929	N261	N1239	N1287	N1285	gen_Steel	1
930	P930	N1239	N262	N1288	N1287	gen_Steel	1
931	P931	N1285	N1287	N1289	N279	gen_Steel	1
932	P932	N1287	N1288	N280	N1289	gen_Steel	1
933	P933	N262	N1242	N1290	N1288	gen_Steel	1
934	P934	N1242	N263	N1291	N1290	gen_Steel	1
935	P935	N1288	N1290	N1292	N280	gen_Steel	1
936	P936	N1290	N1291	N281	N1292	gen_Steel	1
937	P937	N263	N1245	N1293	N1291	gen_Steel	1

Plate Primary Data (Continued)

	Label	A Joint	B Joint	C Joint	D Joint	Material	Thickness[in]
938	P938	N1245	N264	N1294	N1293	gen_Steel	1
939	P939	N1291	N1293	N1295	N281	gen_Steel	1
940	P940	N1293	N1294	N282	N1295	gen_Steel	1
941	P941	N265	N1249	N1297	N1296	gen_Steel	1
942	P942	N1249	N266	N1298	N1297	gen_Steel	1
943	P943	N1296	N1297	N1299	N283	gen_Steel	1
944	P944	N1297	N1298	N284	N1299	gen_Steel	1
945	P945	N266	N1252	N1300	N1298	gen_Steel	1
946	P946	N1252	N267	N1301	N1300	gen_Steel	1
947	P947	N1298	N1300	N1302	N284	gen_Steel	1
948	P948	N1300	N1301	N285	N1302	gen_Steel	1
949	P949	N267	N1255	N1303	N1301	gen_Steel	1
950	P950	N1255	N268	N1304	N1303	gen_Steel	1
951	P951	N1301	N1303	N1305	N285	gen_Steel	1
952	P952	N1303	N1304	N286	N1305	gen_Steel	1
953	P953	N268	N1258	N1306	N1304	gen_Steel	1
954	P954	N1258	N269	N1307	N1306	gen_Steel	1
955	P955	N1304	N1306	N1308	N286	gen_Steel	1
956	P956	N1306	N1307	N287	N1308	gen_Steel	1
957	P957	N269	N1261	N1309	N1307	gen_Steel	1
958	P958	N1261	N270	N1310	N1309	gen_Steel	1
959	P959	N1307	N1309	N1311	N287	gen_Steel	1
960	P960	N1309	N1310	N288	N1311	gen_Steel	1
961	P961	N270	N1264	N1312	N1310	gen_Steel	1
962	P962	N1264	N271	N1313	N1312	gen_Steel	1
963	P963	N1310	N1312	N1314	N288	gen_Steel	1
964	P964	N1312	N1313	N289	N1314	gen_Steel	1
965	P965	N271	N1267	N1315	N1313	gen_Steel	1
966	P966	N1267	N272	N1316	N1315	gen_Steel	1
967	P967	N1313	N1315	N1317	N289	gen_Steel	1
968	P968	N1315	N1316	N290	N1317	gen_Steel	1
969	P969	N272	N1270	N1318	N1316	gen_Steel	1
970	P970	N1270	N273	N1319	N1318	gen_Steel	1
971	P971	N1316	N1318	N1320	N290	gen_Steel	1
972	P972	N1318	N1319	N291	N1320	gen_Steel	1
973	P973	N274	N1274	N1322	N1321	gen_Steel	1
974	P974	N1274	N275	N1323	N1322	gen_Steel	1
975	P975	N1321	N1322	N1324	N292	gen_Steel	1
976	P976	N1322	N1323	N293	N1324	gen_Steel	1
977	P977	N275	N1277	N1325	N1323	gen_Steel	1
978	P978	N1277	N276	N1326	N1325	gen_Steel	1
979	P979	N1323	N1325	N1327	N293	gen_Steel	1
980	P980	N1325	N1326	N294	N1327	gen_Steel	1
981	P981	N276	N1280	N1328	N1326	gen_Steel	1
982	P982	N1280	N277	N1329	N1328	gen_Steel	1
983	P983	N1326	N1328	N1330	N294	gen_Steel	1
984	P984	N1328	N1329	N295	N1330	gen_Steel	1
985	P985	N277	N1283	N1331	N1329	gen_Steel	1
986	P986	N1283	N278	N1332	N1331	gen_Steel	1
987	P987	N1329	N1331	N1333	N295	gen_Steel	1
988	P988	N1331	N1332	N296	N1333	gen_Steel	1
989	P989	N278	N1286	N1334	N1332	gen_Steel	1
990	P990	N1286	N279	N1335	N1334	gen_Steel	1
991	P991	N1332	N1334	N1336	N296	gen_Steel	1
992	P992	N1334	N1335	N297	N1336	gen_Steel	1
993	P993	N279	N1289	N1337	N1335	gen_Steel	1
994	P994	N1289	N280	N1338	N1337	gen_Steel	1

Plate Primary Data (Continued)

	Label	A Joint	B Joint	C Joint	D Joint	Material	Thickness[in]
995	P995	N1335	N1337	N1339	N297	gen_Steel	1
996	P996	N1337	N1338	N298	N1339	gen_Steel	1
997	P997	N280	N1292	N1340	N1338	gen_Steel	1
998	P998	N1292	N281	N1341	N1340	gen_Steel	1
999	P999	N1338	N1340	N1342	N298	gen_Steel	1
1000	P1000	N1340	N1341	N299	N1342	gen_Steel	1
1001	P1001	N281	N1295	N1343	N1341	gen_Steel	1
1002	P1002	N1295	N282	N1344	N1343	gen_Steel	1
1003	P1003	N1341	N1343	N1345	N299	gen_Steel	1
1004	P1004	N1343	N1344	N300	N1345	gen_Steel	1
1005	P1005	N283	N1299	N1347	N1346	gen_Steel	1
1006	P1006	N1299	N284	N1348	N1347	gen_Steel	1
1007	P1007	N1346	N1347	N1349	N303	gen_Steel	1
1008	P1008	N1347	N1348	N304	N1349	gen_Steel	1
1009	P1009	N284	N1302	N1350	N1348	gen_Steel	1
1010	P1010	N1302	N285	N1351	N1350	gen_Steel	1
1011	P1011	N1348	N1350	N1352	N304	gen_Steel	1
1012	P1012	N1350	N1351	N305	N1352	gen_Steel	1
1013	P1013	N285	N1305	N1353	N1351	gen_Steel	1
1014	P1014	N1305	N286	N1354	N1353	gen_Steel	1
1015	P1015	N1351	N1353	N1355	N305	gen_Steel	1
1016	P1016	N1353	N1354	N306	N1355	gen_Steel	1
1017	P1017	N286	N1308	N1356	N1354	gen_Steel	1
1018	P1018	N1308	N287	N1357	N1356	gen_Steel	1
1019	P1019	N1354	N1356	N1358	N306	gen_Steel	1
1020	P1020	N1356	N1357	N307	N1358	gen_Steel	1
1021	P1021	N287	N1311	N1359	N1357	gen_Steel	1
1022	P1022	N1311	N288	N1360	N1359	gen_Steel	1
1023	P1023	N1357	N1359	N1361	N307	gen_Steel	1
1024	P1024	N1359	N1360	N308	N1361	gen_Steel	1
1025	P1025	N288	N1314	N1362	N1360	gen_Steel	1
1026	P1026	N1314	N289	N1363	N1362	gen_Steel	1
1027	P1027	N1360	N1362	N1364	N308	gen_Steel	1
1028	P1028	N1362	N1363	N309	N1364	gen_Steel	1
1029	P1029	N289	N1317	N1365	N1363	gen_Steel	1
1030	P1030	N1317	N290	N1366	N1365	gen_Steel	1
1031	P1031	N1363	N1365	N1367	N309	gen_Steel	1
1032	P1032	N1365	N1366	N310	N1367	gen_Steel	1
1033	P1033	N290	N1320	N1368	N1366	gen_Steel	1
1034	P1034	N1320	N291	N1369	N1368	gen_Steel	1
1035	P1035	N1366	N1368	N1370	N310	gen_Steel	1
1036	P1036	N1368	N1369	N311	N1370	gen_Steel	1
1037	P1037	N292	N1324	N1372	N1371	gen_Steel	1
1038	P1038	N1324	N293	N1373	N1372	gen_Steel	1
1039	P1039	N1371	N1372	N1374	N312	gen_Steel	1
1040	P1040	N1372	N1373	N313	N1374	gen_Steel	1
1041	P1041	N293	N1327	N1375	N1373	gen_Steel	1
1042	P1042	N1327	N294	N1376	N1375	gen_Steel	1
1043	P1043	N1373	N1375	N1377	N313	gen_Steel	1
1044	P1044	N1375	N1376	N314	N1377	gen_Steel	1
1045	P1045	N294	N1330	N1378	N1376	gen_Steel	1
1046	P1046	N1330	N295	N1379	N1378	gen_Steel	1
1047	P1047	N1376	N1378	N1380	N314	gen_Steel	1
1048	P1048	N1378	N1379	N315	N1380	gen_Steel	1
1049	P1049	N295	N1333	N1381	N1379	gen_Steel	1
1050	P1050	N1333	N296	N1382	N1381	gen_Steel	1
1051	P1051	N1379	N1381	N1383	N315	gen_Steel	1

Plate Primary Data (Continued)

	Label	A Joint	B Joint	C Joint	D Joint	Material	Thickness[in]
1052	P1052	N1381	N1382	N316	N1383	gen_Steel	1
1053	P1053	N296	N1336	N1384	N1382	gen_Steel	1
1054	P1054	N1336	N297	N1385	N1384	gen_Steel	1
1055	P1055	N1382	N1384	N1386	N316	gen_Steel	1
1056	P1056	N1384	N1385	N317	N1386	gen_Steel	1
1057	P1057	N297	N1339	N1387	N1385	gen_Steel	1
1058	P1058	N1339	N298	N1388	N1387	gen_Steel	1
1059	P1059	N1385	N1387	N1389	N317	gen_Steel	1
1060	P1060	N1387	N1388	N318	N1389	gen_Steel	1
1061	P1061	N298	N1342	N1390	N1388	gen_Steel	1
1062	P1062	N1342	N299	N1391	N1390	gen_Steel	1
1063	P1063	N1388	N1390	N1392	N318	gen_Steel	1
1064	P1064	N1390	N1391	N319	N1392	gen_Steel	1
1065	P1065	N299	N1345	N1393	N1391	gen_Steel	1
1066	P1066	N1345	N300	N1394	N1393	gen_Steel	1
1067	P1067	N1391	N1393	N1395	N319	gen_Steel	1
1068	P1068	N1393	N1394	N320	N1395	gen_Steel	1
1069	P1069	N300	N1396	N1397	N1394	gen_Steel	1
1070	P1070	N1396	N301	N1398	N1397	gen_Steel	1
1071	P1071	N1394	N1397	N1399	N320	gen_Steel	1
1072	P1072	N1397	N1398	N321	N1399	gen_Steel	1
1073	P1073	N302	N1400	N1402	N1401	gen_Steel	1
1074	P1074	N1400	N303	N1403	N1402	gen_Steel	1
1075	P1075	N1401	N1402	N1404	N325	gen_Steel	1
1076	P1076	N1402	N1403	N326	N1404	gen_Steel	1
1077	P1077	N303	N1349	N1405	N1403	gen_Steel	1
1078	P1078	N1349	N304	N1406	N1405	gen_Steel	1
1079	P1079	N1403	N1405	N1407	N326	gen_Steel	1
1080	P1080	N1405	N1406	N327	N1407	gen_Steel	1
1081	P1081	N304	N1352	N1408	N1406	gen_Steel	1
1082	P1082	N1352	N305	N1409	N1408	gen_Steel	1
1083	P1083	N1406	N1408	N1410	N327	gen_Steel	1
1084	P1084	N1408	N1409	N328	N1410	gen_Steel	1
1085	P1085	N305	N1355	N1411	N1409	gen_Steel	1
1086	P1086	N1355	N306	N1412	N1411	gen_Steel	1
1087	P1087	N1409	N1411	N1413	N328	gen_Steel	1
1088	P1088	N1411	N1412	N329	N1413	gen_Steel	1
1089	P1089	N306	N1358	N1414	N1412	gen_Steel	1
1090	P1090	N1358	N307	N1415	N1414	gen_Steel	1
1091	P1091	N1412	N1414	N1416	N329	gen_Steel	1
1092	P1092	N1414	N1415	N330	N1416	gen_Steel	1
1093	P1093	N307	N1361	N1417	N1415	gen_Steel	1
1094	P1094	N1361	N308	N1418	N1417	gen_Steel	1
1095	P1095	N1415	N1417	N1419	N330	gen_Steel	1
1096	P1096	N1417	N1418	N331	N1419	gen_Steel	1
1097	P1097	N308	N1364	N1420	N1418	gen_Steel	1
1098	P1098	N1364	N309	N1421	N1420	gen_Steel	1
1099	P1099	N1418	N1420	N1422	N331	gen_Steel	1
1100	P1100	N1420	N1421	N332	N1422	gen_Steel	1
1101	P1101	N309	N1367	N1423	N1421	gen_Steel	1
1102	P1102	N1367	N310	N1424	N1423	gen_Steel	1
1103	P1103	N1421	N1423	N1425	N332	gen_Steel	1
1104	P1104	N1423	N1424	N333	N1425	gen_Steel	1
1105	P1105	N310	N1370	N1426	N1424	gen_Steel	1
1106	P1106	N1370	N311	N1427	N1426	gen_Steel	1
1107	P1107	N1424	N1426	N1428	N333	gen_Steel	1
1108	P1108	N1426	N1427	N334	N1428	gen_Steel	1

Plate Primary Data (Continued)

	Label	A Joint	B Joint	C Joint	D Joint	Material	Thickness[in]
1109	P1109	N312	N1374	N1430	N1429	gen_Steel	1
1110	P1110	N1374	N313	N1431	N1430	gen_Steel	1
1111	P1111	N1429	N1430	N1432	N335	gen_Steel	1
1112	P1112	N1430	N1431	N336	N1432	gen_Steel	1
1113	P1113	N313	N1377	N1433	N1431	gen_Steel	1
1114	P1114	N1377	N314	N1434	N1433	gen_Steel	1
1115	P1115	N1431	N1433	N1435	N336	gen_Steel	1
1116	P1116	N1433	N1434	N337	N1435	gen_Steel	1
1117	P1117	N314	N1380	N1436	N1434	gen_Steel	1
1118	P1118	N1380	N315	N1437	N1436	gen_Steel	1
1119	P1119	N1434	N1436	N1438	N337	gen_Steel	1
1120	P1120	N1436	N1437	N338	N1438	gen_Steel	1
1121	P1121	N315	N1383	N1439	N1437	gen_Steel	1
1122	P1122	N1383	N316	N1440	N1439	gen_Steel	1
1123	P1123	N1437	N1439	N1441	N338	gen_Steel	1
1124	P1124	N1439	N1440	N339	N1441	gen_Steel	1
1125	P1125	N316	N1386	N1442	N1440	gen_Steel	1
1126	P1126	N1386	N317	N1443	N1442	gen_Steel	1
1127	P1127	N1440	N1442	N1444	N339	gen_Steel	1
1128	P1128	N1442	N1443	N340	N1444	gen_Steel	1
1129	P1129	N317	N1389	N1445	N1443	gen_Steel	1
1130	P1130	N1389	N318	N1446	N1445	gen_Steel	1
1131	P1131	N1443	N1445	N1447	N340	gen_Steel	1
1132	P1132	N1445	N1446	N341	N1447	gen_Steel	1
1133	P1133	N318	N1392	N1448	N1446	gen_Steel	1
1134	P1134	N1392	N319	N1449	N1448	gen_Steel	1
1135	P1135	N1446	N1448	N1450	N341	gen_Steel	1
1136	P1136	N1448	N1449	N342	N1450	gen_Steel	1
1137	P1137	N319	N1395	N1451	N1449	gen_Steel	1
1138	P1138	N1395	N320	N1452	N1451	gen_Steel	1
1139	P1139	N1449	N1451	N1453	N342	gen_Steel	1
1140	P1140	N1451	N1452	N343	N1453	gen_Steel	1
1141	P1141	N320	N1399	N1454	N1452	gen_Steel	1
1142	P1142	N1399	N321	N1455	N1454	gen_Steel	1
1143	P1143	N1452	N1454	N1456	N343	gen_Steel	1
1144	P1144	N1454	N1455	N344	N1456	gen_Steel	1
1145	P1145	N321	N1457	N1458	N1455	gen_Steel	1
1146	P1146	N1457	N322	N1459	N1458	gen_Steel	1
1147	P1147	N1455	N1458	N1460	N344	gen_Steel	1
1148	P1148	N1458	N1459	N345	N1460	gen_Steel	1
1149	P1149	N322	N1461	N1462	N1459	gen_Steel	1
1150	P1150	N1461	N323	N1463	N1462	gen_Steel	1
1151	P1151	N1459	N1462	N1464	N345	gen_Steel	1
1152	P1152	N1462	N1463	N346	N1464	gen_Steel	1
1153	P1153	N323	N1465	N1466	N1463	gen_Steel	1
1154	P1154	N1465	N324	N1467	N1466	gen_Steel	1
1155	P1155	N1463	N1466	N1468	N346	gen_Steel	1
1156	P1156	N1466	N1467	N347	N1468	gen_Steel	1
1157	P1157	N324	N1469	N1470	N1467	gen_Steel	1
1158	P1158	N1469	N325	N1471	N1470	gen_Steel	1
1159	P1159	N1467	N1470	N1472	N347	gen_Steel	1
1160	P1160	N1470	N1471	N348	N1472	gen_Steel	1
1161	P1161	N325	N1404	N1473	N1471	gen_Steel	1
1162	P1162	N1404	N326	N1474	N1473	gen_Steel	1
1163	P1163	N1471	N1473	N1475	N348	gen_Steel	1
1164	P1164	N1473	N1474	N349	N1475	gen_Steel	1
1165	P1165	N326	N1407	N1476	N1474	gen_Steel	1

Plate Primary Data (Continued)

	Label	A Joint	B Joint	C Joint	D Joint	Material	Thickness[in]
1166	P1166	N1407	N327	N1477	N1476	gen_Steel	1
1167	P1167	N1474	N1476	N1478	N349	gen_Steel	1
1168	P1168	N1476	N1477	N350	N1478	gen_Steel	1
1169	P1169	N327	N1410	N1479	N1477	gen_Steel	1
1170	P1170	N1410	N328	N1480	N1479	gen_Steel	1
1171	P1171	N1477	N1479	N1481	N350	gen_Steel	1
1172	P1172	N1479	N1480	N351	N1481	gen_Steel	1
1173	P1173	N328	N1413	N1482	N1480	gen_Steel	1
1174	P1174	N1413	N329	N1483	N1482	gen_Steel	1
1175	P1175	N1480	N1482	N1484	N351	gen_Steel	1
1176	P1176	N1482	N1483	N352	N1484	gen_Steel	1
1177	P1177	N329	N1416	N1485	N1483	gen_Steel	1
1178	P1178	N1416	N330	N1486	N1485	gen_Steel	1
1179	P1179	N1483	N1485	N1487	N352	gen_Steel	1
1180	P1180	N1485	N1486	N353	N1487	gen_Steel	1
1181	P1181	N330	N1419	N1488	N1486	gen_Steel	1
1182	P1182	N1419	N331	N1489	N1488	gen_Steel	1
1183	P1183	N1486	N1488	N1490	N353	gen_Steel	1
1184	P1184	N1488	N1489	N354	N1490	gen_Steel	1
1185	P1185	N331	N1422	N1491	N1489	gen_Steel	1
1186	P1186	N1422	N332	N1492	N1491	gen_Steel	1
1187	P1187	N1489	N1491	N1493	N354	gen_Steel	1
1188	P1188	N1491	N1492	N355	N1493	gen_Steel	1
1189	P1189	N332	N1425	N1494	N1492	gen_Steel	1
1190	P1190	N1425	N333	N1495	N1494	gen_Steel	1
1191	P1191	N1492	N1494	N1496	N355	gen_Steel	1
1192	P1192	N1494	N1495	N356	N1496	gen_Steel	1
1193	P1193	N333	N1428	N1497	N1495	gen_Steel	1
1194	P1194	N1428	N334	N1498	N1497	gen_Steel	1
1195	P1195	N1495	N1497	N1499	N356	gen_Steel	1
1196	P1196	N1497	N1498	N357	N1499	gen_Steel	1
1197	P1197	N335	N1432	N1501	N1500	gen_Steel	1
1198	P1198	N1432	N336	N1502	N1501	gen_Steel	1
1199	P1199	N1500	N1501	N1503	N358	gen_Steel	1
1200	P1200	N1501	N1502	N359	N1503	gen_Steel	1
1201	P1201	N336	N1435	N1504	N1502	gen_Steel	1
1202	P1202	N1435	N337	N1505	N1504	gen_Steel	1
1203	P1203	N1502	N1504	N1506	N359	gen_Steel	1
1204	P1204	N1504	N1505	N360	N1506	gen_Steel	1
1205	P1205	N337	N1438	N1507	N1505	gen_Steel	1
1206	P1206	N1438	N338	N1508	N1507	gen_Steel	1
1207	P1207	N1505	N1507	N1509	N360	gen_Steel	1
1208	P1208	N1507	N1508	N361	N1509	gen_Steel	1
1209	P1209	N338	N1441	N1510	N1508	gen_Steel	1
1210	P1210	N1441	N339	N1511	N1510	gen_Steel	1
1211	P1211	N1508	N1510	N1512	N361	gen_Steel	1
1212	P1212	N1510	N1511	N362	N1512	gen_Steel	1
1213	P1213	N339	N1444	N1513	N1511	gen_Steel	1
1214	P1214	N1444	N340	N1514	N1513	gen_Steel	1
1215	P1215	N1511	N1513	N1515	N362	gen_Steel	1
1216	P1216	N1513	N1514	N363	N1515	gen_Steel	1
1217	P1217	N340	N1447	N1516	N1514	gen_Steel	1
1218	P1218	N1447	N341	N1517	N1516	gen_Steel	1
1219	P1219	N1514	N1516	N1518	N363	gen_Steel	1
1220	P1220	N1516	N1517	N364	N1518	gen_Steel	1
1221	P1221	N341	N1450	N1519	N1517	gen_Steel	1
1222	P1222	N1450	N342	N1520	N1519	gen_Steel	1

Plate Primary Data (Continued)

	Label	A Joint	B Joint	C Joint	D Joint	Material	Thickness[in]
1223	P1223	N1517	N1519	N1521	N364	gen_Steel	1
1224	P1224	N1519	N1520	N365	N1521	gen_Steel	1
1225	P1225	N342	N1453	N1522	N1520	gen_Steel	1
1226	P1226	N1453	N343	N1523	N1522	gen_Steel	1
1227	P1227	N1520	N1522	N1524	N365	gen_Steel	1
1228	P1228	N1522	N1523	N366	N1524	gen_Steel	1
1229	P1229	N343	N1456	N1525	N1523	gen_Steel	1
1230	P1230	N1456	N344	N1526	N1525	gen_Steel	1
1231	P1231	N1523	N1525	N1527	N366	gen_Steel	1
1232	P1232	N1525	N1526	N367	N1527	gen_Steel	1
1233	P1233	N344	N1460	N1528	N1526	gen_Steel	1
1234	P1234	N1460	N345	N1529	N1528	gen_Steel	1
1235	P1235	N1526	N1528	N1530	N367	gen_Steel	1
1236	P1236	N1528	N1529	N368	N1530	gen_Steel	1
1237	P1237	N345	N1464	N1531	N1529	gen_Steel	1
1238	P1238	N1464	N346	N1532	N1531	gen_Steel	1
1239	P1239	N1529	N1531	N1533	N368	gen_Steel	1
1240	P1240	N1531	N1532	N369	N1533	gen_Steel	1
1241	P1241	N346	N1468	N1534	N1532	gen_Steel	1
1242	P1242	N1468	N347	N1535	N1534	gen_Steel	1
1243	P1243	N1532	N1534	N1536	N369	gen_Steel	1
1244	P1244	N1534	N1535	N370	N1536	gen_Steel	1
1245	P1245	N347	N1472	N1537	N1535	gen_Steel	1
1246	P1246	N1472	N348	N1538	N1537	gen_Steel	1
1247	P1247	N1535	N1537	N1539	N370	gen_Steel	1
1248	P1248	N1537	N1538	N371	N1539	gen_Steel	1
1249	P1249	N348	N1475	N1540	N1538	gen_Steel	1
1250	P1250	N1475	N349	N1541	N1540	gen_Steel	1
1251	P1251	N1538	N1540	N1542	N371	gen_Steel	1
1252	P1252	N1540	N1541	N372	N1542	gen_Steel	1
1253	P1253	N349	N1478	N1543	N1541	gen_Steel	1
1254	P1254	N1478	N350	N1544	N1543	gen_Steel	1
1255	P1255	N1541	N1543	N1545	N372	gen_Steel	1
1256	P1256	N1543	N1544	N373	N1545	gen_Steel	1
1257	P1257	N350	N1481	N1546	N1544	gen_Steel	1
1258	P1258	N1481	N351	N1547	N1546	gen_Steel	1
1259	P1259	N1544	N1546	N1548	N373	gen_Steel	1
1260	P1260	N1546	N1547	N374	N1548	gen_Steel	1
1261	P1261	N351	N1484	N1549	N1547	gen_Steel	1
1262	P1262	N1484	N352	N1550	N1549	gen_Steel	1
1263	P1263	N1547	N1549	N1551	N374	gen_Steel	1
1264	P1264	N1549	N1550	N375	N1551	gen_Steel	1
1265	P1265	N352	N1487	N1552	N1550	gen_Steel	1
1266	P1266	N1487	N353	N1553	N1552	gen_Steel	1
1267	P1267	N1550	N1552	N1554	N375	gen_Steel	1
1268	P1268	N1552	N1553	N376	N1554	gen_Steel	1
1269	P1269	N353	N1490	N1555	N1553	gen_Steel	1
1270	P1270	N1490	N354	N1556	N1555	gen_Steel	1
1271	P1271	N1553	N1555	N1557	N376	gen_Steel	1
1272	P1272	N1555	N1556	N377	N1557	gen_Steel	1
1273	P1273	N354	N1493	N1558	N1556	gen_Steel	1
1274	P1274	N1493	N355	N1559	N1558	gen_Steel	1
1275	P1275	N1556	N1558	N1560	N377	gen_Steel	1
1276	P1276	N1558	N1559	N378	N1560	gen_Steel	1
1277	P1277	N355	N1496	N1561	N1559	gen_Steel	1
1278	P1278	N1496	N356	N1562	N1561	gen_Steel	1
1279	P1279	N1559	N1561	N1563	N378	gen_Steel	1

Plate Primary Data (Continued)

	Label	A Joint	B Joint	C Joint	D Joint	Material	Thickness[in]
1280	P1280	N1561	N1562	N379	N1563	gen_Steel	1
1281	P1281	N356	N1499	N1564	N1562	gen_Steel	1
1282	P1282	N1499	N357	N1565	N1564	gen_Steel	1
1283	P1283	N1562	N1564	N1566	N379	gen_Steel	1
1284	P1284	N1564	N1565	N380	N1566	gen_Steel	1
1285	P1285	N358	N1503	N1568	N1567	gen_Steel	1
1286	P1286	N1503	N359	N1569	N1568	gen_Steel	1
1287	P1287	N1567	N1568	N1570	N381	gen_Steel	1
1288	P1288	N1568	N1569	N382	N1570	gen_Steel	1
1289	P1289	N359	N1506	N1571	N1569	gen_Steel	1
1290	P1290	N1506	N360	N1572	N1571	gen_Steel	1
1291	P1291	N1569	N1571	N1573	N382	gen_Steel	1
1292	P1292	N1571	N1572	N383	N1573	gen_Steel	1
1293	P1293	N360	N1509	N1574	N1572	gen_Steel	1
1294	P1294	N1509	N361	N1575	N1574	gen_Steel	1
1295	P1295	N1572	N1574	N1576	N383	gen_Steel	1
1296	P1296	N1574	N1575	N384	N1576	gen_Steel	1
1297	P1297	N361	N1512	N1577	N1575	gen_Steel	1
1298	P1298	N1512	N362	N1578	N1577	gen_Steel	1
1299	P1299	N1575	N1577	N1579	N384	gen_Steel	1
1300	P1300	N1577	N1578	N385	N1579	gen_Steel	1
1301	P1301	N362	N1515	N1580	N1578	gen_Steel	1
1302	P1302	N1515	N363	N1581	N1580	gen_Steel	1
1303	P1303	N1578	N1580	N1582	N385	gen_Steel	1
1304	P1304	N1580	N1581	N386	N1582	gen_Steel	1
1305	P1305	N363	N1518	N1583	N1581	gen_Steel	1
1306	P1306	N1518	N364	N1584	N1583	gen_Steel	1
1307	P1307	N1581	N1583	N1585	N386	gen_Steel	1
1308	P1308	N1583	N1584	N387	N1585	gen_Steel	1
1309	P1309	N364	N1521	N1586	N1584	gen_Steel	1
1310	P1310	N1521	N365	N1587	N1586	gen_Steel	1
1311	P1311	N1584	N1586	N1588	N387	gen_Steel	1
1312	P1312	N1586	N1587	N388	N1588	gen_Steel	1
1313	P1313	N365	N1524	N1589	N1587	gen_Steel	1
1314	P1314	N1524	N366	N1590	N1589	gen_Steel	1
1315	P1315	N1587	N1589	N1591	N388	gen_Steel	1
1316	P1316	N1589	N1590	N389	N1591	gen_Steel	1
1317	P1317	N366	N1527	N1592	N1590	gen_Steel	1
1318	P1318	N1527	N367	N1593	N1592	gen_Steel	1
1319	P1319	N1590	N1592	N1594	N389	gen_Steel	1
1320	P1320	N1592	N1593	N390	N1594	gen_Steel	1
1321	P1321	N367	N1530	N1595	N1593	gen_Steel	1
1322	P1322	N1530	N368	N1596	N1595	gen_Steel	1
1323	P1323	N1593	N1595	N1597	N390	gen_Steel	1
1324	P1324	N1595	N1596	N391	N1597	gen_Steel	1
1325	P1325	N368	N1533	N1598	N1596	gen_Steel	1
1326	P1326	N1533	N369	N1599	N1598	gen_Steel	1
1327	P1327	N1596	N1598	N1600	N391	gen_Steel	1
1328	P1328	N1598	N1599	N392	N1600	gen_Steel	1
1329	P1329	N369	N1536	N1601	N1599	gen_Steel	1
1330	P1330	N1536	N370	N1602	N1601	gen_Steel	1
1331	P1331	N1599	N1601	N1603	N392	gen_Steel	1
1332	P1332	N1601	N1602	N393	N1603	gen_Steel	1
1333	P1333	N370	N1539	N1604	N1602	gen_Steel	1
1334	P1334	N1539	N371	N1605	N1604	gen_Steel	1
1335	P1335	N1602	N1604	N1606	N393	gen_Steel	1
1336	P1336	N1604	N1605	N394	N1606	gen_Steel	1

Plate Primary Data (Continued)

	Label	A Joint	B Joint	C Joint	D Joint	Material	Thickness[in]
1337	P1337	N371	N1542	N1607	N1605	gen_Steel	1
1338	P1338	N1542	N372	N1608	N1607	gen_Steel	1
1339	P1339	N1605	N1607	N1609	N394	gen_Steel	1
1340	P1340	N1607	N1608	N395	N1609	gen_Steel	1
1341	P1341	N372	N1545	N1610	N1608	gen_Steel	1
1342	P1342	N1545	N373	N1611	N1610	gen_Steel	1
1343	P1343	N1608	N1610	N1612	N395	gen_Steel	1
1344	P1344	N1610	N1611	N396	N1612	gen_Steel	1
1345	P1345	N373	N1548	N1613	N1611	gen_Steel	1
1346	P1346	N1548	N374	N1614	N1613	gen_Steel	1
1347	P1347	N1611	N1613	N1615	N396	gen_Steel	1
1348	P1348	N1613	N1614	N397	N1615	gen_Steel	1
1349	P1349	N374	N1551	N1616	N1614	gen_Steel	1
1350	P1350	N1551	N375	N1617	N1616	gen_Steel	1
1351	P1351	N1614	N1616	N1618	N397	gen_Steel	1
1352	P1352	N1616	N1617	N398	N1618	gen_Steel	1
1353	P1353	N375	N1554	N1619	N1617	gen_Steel	1
1354	P1354	N1554	N376	N1620	N1619	gen_Steel	1
1355	P1355	N1617	N1619	N1621	N398	gen_Steel	1
1356	P1356	N1619	N1620	N399	N1621	gen_Steel	1
1357	P1357	N376	N1557	N1622	N1620	gen_Steel	1
1358	P1358	N1557	N377	N1623	N1622	gen_Steel	1
1359	P1359	N1620	N1622	N1624	N399	gen_Steel	1
1360	P1360	N1622	N1623	N400	N1624	gen_Steel	1
1361	P1361	N377	N1560	N1625	N1623	gen_Steel	1
1362	P1362	N1560	N378	N1626	N1625	gen_Steel	1
1363	P1363	N1623	N1625	N1627	N400	gen_Steel	1
1364	P1364	N1625	N1626	N401	N1627	gen_Steel	1
1365	P1365	N378	N1563	N1628	N1626	gen_Steel	1
1366	P1366	N1563	N379	N1629	N1628	gen_Steel	1
1367	P1367	N1626	N1628	N1630	N401	gen_Steel	1
1368	P1368	N1628	N1629	N402	N1630	gen_Steel	1
1369	P1369	N379	N1566	N1631	N1629	gen_Steel	1
1370	P1370	N1566	N380	N1632	N1631	gen_Steel	1
1371	P1371	N1629	N1631	N1633	N402	gen_Steel	1
1372	P1372	N1631	N1632	N403	N1633	gen_Steel	1
1373	P1373	N381	N1570	N1635	N1634	gen_Steel	1
1374	P1374	N1570	N382	N1636	N1635	gen_Steel	1
1375	P1375	N1634	N1635	N1637	N404	gen_Steel	1
1376	P1376	N1635	N1636	N405	N1637	gen_Steel	1
1377	P1377	N382	N1573	N1638	N1636	gen_Steel	1
1378	P1378	N1573	N383	N1639	N1638	gen_Steel	1
1379	P1379	N1636	N1638	N1640	N405	gen_Steel	1
1380	P1380	N1638	N1639	N406	N1640	gen_Steel	1
1381	P1381	N383	N1576	N1641	N1639	gen_Steel	1
1382	P1382	N1576	N384	N1642	N1641	gen_Steel	1
1383	P1383	N1639	N1641	N1643	N406	gen_Steel	1
1384	P1384	N1641	N1642	N407	N1643	gen_Steel	1
1385	P1385	N384	N1579	N1644	N1642	gen_Steel	1
1386	P1386	N1579	N385	N1645	N1644	gen_Steel	1
1387	P1387	N1642	N1644	N1646	N407	gen_Steel	1
1388	P1388	N1644	N1645	N408	N1646	gen_Steel	1
1389	P1389	N385	N1582	N1647	N1645	gen_Steel	1
1390	P1390	N1582	N386	N1648	N1647	gen_Steel	1
1391	P1391	N1645	N1647	N1649	N408	gen_Steel	1
1392	P1392	N1647	N1648	N409	N1649	gen_Steel	1
1393	P1393	N386	N1585	N1650	N1648	gen_Steel	1

Plate Primary Data (Continued)

	Label	A Joint	B Joint	C Joint	D Joint	Material	Thickness[in]
1394	P1394	N1585	N387	N1651	N1650	gen_Steel	1
1395	P1395	N1648	N1650	N1652	N409	gen_Steel	1
1396	P1396	N1650	N1651	N410	N1652	gen_Steel	1
1397	P1397	N387	N1588	N1653	N1651	gen_Steel	1
1398	P1398	N1588	N388	N1654	N1653	gen_Steel	1
1399	P1399	N1651	N1653	N1655	N410	gen_Steel	1
1400	P1400	N1653	N1654	N411	N1655	gen_Steel	1
1401	P1401	N388	N1591	N1656	N1654	gen_Steel	1
1402	P1402	N1591	N389	N1657	N1656	gen_Steel	1
1403	P1403	N1654	N1656	N1658	N411	gen_Steel	1
1404	P1404	N1656	N1657	N412	N1658	gen_Steel	1
1405	P1405	N389	N1594	N1659	N1657	gen_Steel	1
1406	P1406	N1594	N390	N1660	N1659	gen_Steel	1
1407	P1407	N1657	N1659	N1661	N412	gen_Steel	1
1408	P1408	N1659	N1660	N413	N1661	gen_Steel	1
1409	P1409	N390	N1597	N1662	N1660	gen_Steel	1
1410	P1410	N1597	N391	N1663	N1662	gen_Steel	1
1411	P1411	N1660	N1662	N1664	N413	gen_Steel	1
1412	P1412	N1662	N1663	N414	N1664	gen_Steel	1
1413	P1413	N391	N1600	N1665	N1663	gen_Steel	1
1414	P1414	N1600	N392	N1666	N1665	gen_Steel	1
1415	P1415	N1663	N1665	N1667	N414	gen_Steel	1
1416	P1416	N1665	N1666	N415	N1667	gen_Steel	1
1417	P1417	N392	N1603	N1668	N1666	gen_Steel	1
1418	P1418	N1603	N393	N1669	N1668	gen_Steel	1
1419	P1419	N1666	N1668	N1670	N415	gen_Steel	1
1420	P1420	N1668	N1669	N416	N1670	gen_Steel	1
1421	P1421	N393	N1606	N1671	N1669	gen_Steel	1
1422	P1422	N1606	N394	N1672	N1671	gen_Steel	1
1423	P1423	N1669	N1671	N1673	N416	gen_Steel	1
1424	P1424	N1671	N1672	N417	N1673	gen_Steel	1
1425	P1425	N394	N1609	N1674	N1672	gen_Steel	1
1426	P1426	N1609	N395	N1675	N1674	gen_Steel	1
1427	P1427	N1672	N1674	N1676	N417	gen_Steel	1
1428	P1428	N1674	N1675	N418	N1676	gen_Steel	1
1429	P1429	N395	N1612	N1677	N1675	gen_Steel	1
1430	P1430	N1612	N396	N1678	N1677	gen_Steel	1
1431	P1431	N1675	N1677	N1679	N418	gen_Steel	1
1432	P1432	N1677	N1678	N419	N1679	gen_Steel	1
1433	P1433	N396	N1615	N1680	N1678	gen_Steel	1
1434	P1434	N1615	N397	N1681	N1680	gen_Steel	1
1435	P1435	N1678	N1680	N1682	N419	gen_Steel	1
1436	P1436	N1680	N1681	N420	N1682	gen_Steel	1
1437	P1437	N397	N1618	N1683	N1681	gen_Steel	1
1438	P1438	N1618	N398	N1684	N1683	gen_Steel	1
1439	P1439	N1681	N1683	N1685	N420	gen_Steel	1
1440	P1440	N1683	N1684	N421	N1685	gen_Steel	1
1441	P1441	N398	N1621	N1686	N1684	gen_Steel	1
1442	P1442	N1621	N399	N1687	N1686	gen_Steel	1
1443	P1443	N1684	N1686	N1688	N421	gen_Steel	1
1444	P1444	N1686	N1687	N422	N1688	gen_Steel	1
1445	P1445	N399	N1624	N1689	N1687	gen_Steel	1
1446	P1446	N1624	N400	N1690	N1689	gen_Steel	1
1447	P1447	N1687	N1689	N1691	N422	gen_Steel	1
1448	P1448	N1689	N1690	N423	N1691	gen_Steel	1
1449	P1449	N400	N1627	N1692	N1690	gen_Steel	1
1450	P1450	N1627	N401	N1693	N1692	gen_Steel	1

Plate Primary Data (Continued)

	Label	A Joint	B Joint	C Joint	D Joint	Material	Thickness[in]
1451	P1451	N1690	N1692	N1694	N423	gen_Steel	1
1452	P1452	N1692	N1693	N424	N1694	gen_Steel	1
1453	P1453	N401	N1630	N1695	N1693	gen_Steel	1
1454	P1454	N1630	N402	N1696	N1695	gen_Steel	1
1455	P1455	N1693	N1695	N1697	N424	gen_Steel	1
1456	P1456	N1695	N1696	N425	N1697	gen_Steel	1
1457	P1457	N402	N1633	N1698	N1696	gen_Steel	1
1458	P1458	N1633	N403	N1699	N1698	gen_Steel	1
1459	P1459	N1696	N1698	N1700	N425	gen_Steel	1
1460	P1460	N1698	N1699	N426	N1700	gen_Steel	1
1461	P1461	N404	N1637	N1702	N1701	gen_Steel	1
1462	P1462	N1637	N405	N1703	N1702	gen_Steel	1
1463	P1463	N1701	N1702	N1704	N427	gen_Steel	1
1464	P1464	N1702	N1703	N428	N1704	gen_Steel	1
1465	P1465	N405	N1640	N1705	N1703	gen_Steel	1
1466	P1466	N1640	N406	N1706	N1705	gen_Steel	1
1467	P1467	N1703	N1705	N1707	N428	gen_Steel	1
1468	P1468	N1705	N1706	N429	N1707	gen_Steel	1
1469	P1469	N406	N1643	N1708	N1706	gen_Steel	1
1470	P1470	N1643	N407	N1709	N1708	gen_Steel	1
1471	P1471	N1706	N1708	N1710	N429	gen_Steel	1
1472	P1472	N1708	N1709	N430	N1710	gen_Steel	1
1473	P1473	N407	N1646	N1711	N1709	gen_Steel	1
1474	P1474	N1646	N408	N1712	N1711	gen_Steel	1
1475	P1475	N1709	N1711	N1713	N430	gen_Steel	1
1476	P1476	N1711	N1712	N431	N1713	gen_Steel	1
1477	P1477	N408	N1649	N1714	N1712	gen_Steel	1
1478	P1478	N1649	N409	N1715	N1714	gen_Steel	1
1479	P1479	N1712	N1714	N1716	N431	gen_Steel	1
1480	P1480	N1714	N1715	N432	N1716	gen_Steel	1
1481	P1481	N409	N1652	N1717	N1715	gen_Steel	1
1482	P1482	N1652	N410	N1718	N1717	gen_Steel	1
1483	P1483	N1715	N1717	N1719	N432	gen_Steel	1
1484	P1484	N1717	N1718	N433	N1719	gen_Steel	1
1485	P1485	N410	N1655	N1720	N1718	gen_Steel	1
1486	P1486	N1655	N411	N1721	N1720	gen_Steel	1
1487	P1487	N1718	N1720	N1722	N433	gen_Steel	1
1488	P1488	N1720	N1721	N434	N1722	gen_Steel	1
1489	P1489	N411	N1658	N1723	N1721	gen_Steel	1
1490	P1490	N1658	N412	N1724	N1723	gen_Steel	1
1491	P1491	N1721	N1723	N1725	N434	gen_Steel	1
1492	P1492	N1723	N1724	N435	N1725	gen_Steel	1
1493	P1493	N412	N1661	N1726	N1724	gen_Steel	1
1494	P1494	N1661	N413	N1727	N1726	gen_Steel	1
1495	P1495	N1724	N1726	N1728	N435	gen_Steel	1
1496	P1496	N1726	N1727	N436	N1728	gen_Steel	1
1497	P1497	N413	N1664	N1729	N1727	gen_Steel	1
1498	P1498	N1664	N414	N1730	N1729	gen_Steel	1
1499	P1499	N1727	N1729	N1731	N436	gen_Steel	1
1500	P1500	N1729	N1730	N437	N1731	gen_Steel	1
1501	P1501	N414	N1667	N1732	N1730	gen_Steel	1
1502	P1502	N1667	N415	N1733	N1732	gen_Steel	1
1503	P1503	N1730	N1732	N1734	N437	gen_Steel	1
1504	P1504	N1732	N1733	N438	N1734	gen_Steel	1
1505	P1505	N415	N1670	N1735	N1733	gen_Steel	1
1506	P1506	N1670	N416	N1736	N1735	gen_Steel	1
1507	P1507	N1733	N1735	N1737	N438	gen_Steel	1

Plate Primary Data (Continued)

	Label	A Joint	B Joint	C Joint	D Joint	Material	Thickness[in]
1508	P1508	N1735	N1736	N439	N1737	gen_Steel	1
1509	P1509	N416	N1673	N1738	N1736	gen_Steel	1
1510	P1510	N1673	N417	N1739	N1738	gen_Steel	1
1511	P1511	N1736	N1738	N1740	N439	gen_Steel	1
1512	P1512	N1738	N1739	N440	N1740	gen_Steel	1
1513	P1513	N417	N1676	N1741	N1739	gen_Steel	1
1514	P1514	N1676	N418	N1742	N1741	gen_Steel	1
1515	P1515	N1739	N1741	N1743	N440	gen_Steel	1
1516	P1516	N1741	N1742	N441	N1743	gen_Steel	1
1517	P1517	N418	N1679	N1744	N1742	gen_Steel	1
1518	P1518	N1679	N419	N1745	N1744	gen_Steel	1
1519	P1519	N1742	N1744	N1746	N441	gen_Steel	1
1520	P1520	N1744	N1745	N442	N1746	gen_Steel	1
1521	P1521	N419	N1682	N1747	N1745	gen_Steel	1
1522	P1522	N1682	N420	N1748	N1747	gen_Steel	1
1523	P1523	N1745	N1747	N1749	N442	gen_Steel	1
1524	P1524	N1747	N1748	N443	N1749	gen_Steel	1
1525	P1525	N420	N1685	N1750	N1748	gen_Steel	1
1526	P1526	N1685	N421	N1751	N1750	gen_Steel	1
1527	P1527	N1748	N1750	N1752	N443	gen_Steel	1
1528	P1528	N1750	N1751	N444	N1752	gen_Steel	1
1529	P1529	N421	N1688	N1753	N1751	gen_Steel	1
1530	P1530	N1688	N422	N1754	N1753	gen_Steel	1
1531	P1531	N1751	N1753	N1755	N444	gen_Steel	1
1532	P1532	N1753	N1754	N445	N1755	gen_Steel	1
1533	P1533	N422	N1691	N1756	N1754	gen_Steel	1
1534	P1534	N1691	N423	N1757	N1756	gen_Steel	1
1535	P1535	N1754	N1756	N1758	N445	gen_Steel	1
1536	P1536	N1756	N1757	N446	N1758	gen_Steel	1
1537	P1537	N423	N1694	N1759	N1757	gen_Steel	1
1538	P1538	N1694	N424	N1760	N1759	gen_Steel	1
1539	P1539	N1757	N1759	N1761	N446	gen_Steel	1
1540	P1540	N1759	N1760	N447	N1761	gen_Steel	1
1541	P1541	N424	N1697	N1762	N1760	gen_Steel	1
1542	P1542	N1697	N425	N1763	N1762	gen_Steel	1
1543	P1543	N1760	N1762	N1764	N447	gen_Steel	1
1544	P1544	N1762	N1763	N448	N1764	gen_Steel	1
1545	P1545	N425	N1700	N1765	N1763	gen_Steel	1
1546	P1546	N1700	N426	N1766	N1765	gen_Steel	1
1547	P1547	N1763	N1765	N1767	N448	gen_Steel	1
1548	P1548	N1765	N1766	N449	N1767	gen_Steel	1
1549	P1549	N427	N1704	N1769	N1768	gen_Steel	1
1550	P1550	N1704	N428	N1770	N1769	gen_Steel	1
1551	P1551	N1768	N1769	N1771	N450	gen_Steel	1
1552	P1552	N1769	N1770	N451	N1771	gen_Steel	1
1553	P1553	N428	N1707	N1772	N1770	gen_Steel	1
1554	P1554	N1707	N429	N1773	N1772	gen_Steel	1
1555	P1555	N1770	N1772	N1774	N451	gen_Steel	1
1556	P1556	N1772	N1773	N452	N1774	gen_Steel	1
1557	P1557	N429	N1710	N1775	N1773	gen_Steel	1
1558	P1558	N1710	N430	N1776	N1775	gen_Steel	1
1559	P1559	N1773	N1775	N1777	N452	gen_Steel	1
1560	P1560	N1775	N1776	N453	N1777	gen_Steel	1
1561	P1561	N430	N1713	N1778	N1776	gen_Steel	1
1562	P1562	N1713	N431	N1779	N1778	gen_Steel	1
1563	P1563	N1776	N1778	N1780	N453	gen_Steel	1
1564	P1564	N1778	N1779	N454	N1780	gen_Steel	1

Plate Primary Data (Continued)

	Label	A Joint	B Joint	C Joint	D Joint	Material	Thickness[in]
1565	P1565	N431	N1716	N1781	N1779	gen_Steel	1
1566	P1566	N1716	N432	N1782	N1781	gen_Steel	1
1567	P1567	N1779	N1781	N1783	N454	gen_Steel	1
1568	P1568	N1781	N1782	N455	N1783	gen_Steel	1
1569	P1569	N432	N1719	N1784	N1782	gen_Steel	1
1570	P1570	N1719	N433	N1785	N1784	gen_Steel	1
1571	P1571	N1782	N1784	N1786	N455	gen_Steel	1
1572	P1572	N1784	N1785	N456	N1786	gen_Steel	1
1573	P1573	N433	N1722	N1787	N1785	gen_Steel	1
1574	P1574	N1722	N434	N1788	N1787	gen_Steel	1
1575	P1575	N1785	N1787	N1789	N456	gen_Steel	1
1576	P1576	N1787	N1788	N457	N1789	gen_Steel	1
1577	P1577	N434	N1725	N1790	N1788	gen_Steel	1
1578	P1578	N1725	N435	N1791	N1790	gen_Steel	1
1579	P1579	N1788	N1790	N1792	N457	gen_Steel	1
1580	P1580	N1790	N1791	N458	N1792	gen_Steel	1
1581	P1581	N435	N1728	N1793	N1791	gen_Steel	1
1582	P1582	N1728	N436	N1794	N1793	gen_Steel	1
1583	P1583	N1791	N1793	N1795	N458	gen_Steel	1
1584	P1584	N1793	N1794	N459	N1795	gen_Steel	1
1585	P1585	N436	N1731	N1796	N1794	gen_Steel	1
1586	P1586	N1731	N437	N1797	N1796	gen_Steel	1
1587	P1587	N1794	N1796	N1798	N459	gen_Steel	1
1588	P1588	N1796	N1797	N460	N1798	gen_Steel	1
1589	P1589	N437	N1734	N1799	N1797	gen_Steel	1
1590	P1590	N1734	N438	N1800	N1799	gen_Steel	1
1591	P1591	N1797	N1799	N1801	N460	gen_Steel	1
1592	P1592	N1799	N1800	N461	N1801	gen_Steel	1
1593	P1593	N438	N1737	N1802	N1800	gen_Steel	1
1594	P1594	N1737	N439	N1803	N1802	gen_Steel	1
1595	P1595	N1800	N1802	N1804	N461	gen_Steel	1
1596	P1596	N1802	N1803	N462	N1804	gen_Steel	1
1597	P1597	N439	N1740	N1805	N1803	gen_Steel	1
1598	P1598	N1740	N440	N1806	N1805	gen_Steel	1
1599	P1599	N1803	N1805	N1807	N462	gen_Steel	1
1600	P1600	N1805	N1806	N463	N1807	gen_Steel	1
1601	P1601	N440	N1743	N1808	N1806	gen_Steel	1
1602	P1602	N1743	N441	N1809	N1808	gen_Steel	1
1603	P1603	N1806	N1808	N1810	N463	gen_Steel	1
1604	P1604	N1808	N1809	N464	N1810	gen_Steel	1
1605	P1605	N441	N1746	N1811	N1809	gen_Steel	1
1606	P1606	N1746	N442	N1812	N1811	gen_Steel	1
1607	P1607	N1809	N1811	N1813	N464	gen_Steel	1
1608	P1608	N1811	N1812	N465	N1813	gen_Steel	1
1609	P1609	N442	N1749	N1814	N1812	gen_Steel	1
1610	P1610	N1749	N443	N1815	N1814	gen_Steel	1
1611	P1611	N1812	N1814	N1816	N465	gen_Steel	1
1612	P1612	N1814	N1815	N466	N1816	gen_Steel	1
1613	P1613	N443	N1752	N1817	N1815	gen_Steel	1
1614	P1614	N1752	N444	N1818	N1817	gen_Steel	1
1615	P1615	N1815	N1817	N1819	N466	gen_Steel	1
1616	P1616	N1817	N1818	N467	N1819	gen_Steel	1
1617	P1617	N444	N1755	N1820	N1818	gen_Steel	1
1618	P1618	N1755	N445	N1821	N1820	gen_Steel	1
1619	P1619	N1818	N1820	N1822	N467	gen_Steel	1
1620	P1620	N1820	N1821	N468	N1822	gen_Steel	1
1621	P1621	N445	N1758	N1823	N1821	gen_Steel	1

Plate Primary Data (Continued)

	Label	A Joint	B Joint	C Joint	D Joint	Material	Thickness[in]
1622	P1622	N1758	N446	N1824	N1823	gen_Steel	1
1623	P1623	N1821	N1823	N1825	N468	gen_Steel	1
1624	P1624	N1823	N1824	N469	N1825	gen_Steel	1
1625	P1625	N446	N1761	N1826	N1824	gen_Steel	1
1626	P1626	N1761	N447	N1827	N1826	gen_Steel	1
1627	P1627	N1824	N1826	N1828	N469	gen_Steel	1
1628	P1628	N1826	N1827	N470	N1828	gen_Steel	1
1629	P1629	N447	N1764	N1829	N1827	gen_Steel	1
1630	P1630	N1764	N448	N1830	N1829	gen_Steel	1
1631	P1631	N1827	N1829	N1831	N470	gen_Steel	1
1632	P1632	N1829	N1830	N471	N1831	gen_Steel	1
1633	P1633	N448	N1767	N1832	N1830	gen_Steel	1
1634	P1634	N1767	N449	N1833	N1832	gen_Steel	1
1635	P1635	N1830	N1832	N1834	N471	gen_Steel	1
1636	P1636	N1832	N1833	N472	N1834	gen_Steel	1
1637	P1637	N450	N1771	N1836	N1835	gen_Steel	1
1638	P1638	N1771	N451	N1837	N1836	gen_Steel	1
1639	P1639	N1835	N1836	N1838	N473	gen_Steel	1
1640	P1640	N1836	N1837	N474	N1838	gen_Steel	1
1641	P1641	N452	N1777	N1842	N1840	gen_Steel	1
1642	P1642	N1777	N453	N1843	N1842	gen_Steel	1
1643	P1643	N1840	N1842	N1844	N475	gen_Steel	1
1644	P1644	N1842	N1843	N476	N1844	gen_Steel	1
1645	P1645	N453	N1780	N1845	N1843	gen_Steel	1
1646	P1646	N1780	N454	N1846	N1845	gen_Steel	1
1647	P1647	N1843	N1845	N1847	N476	gen_Steel	1
1648	P1648	N1845	N1846	N477	N1847	gen_Steel	1
1649	P1649	N454	N1783	N1848	N1846	gen_Steel	1
1650	P1650	N1783	N455	N1849	N1848	gen_Steel	1
1651	P1651	N1846	N1848	N1850	N477	gen_Steel	1
1652	P1652	N1848	N1849	N478	N1850	gen_Steel	1
1653	P1653	N455	N1786	N1851	N1849	gen_Steel	1
1654	P1654	N1786	N456	N1852	N1851	gen_Steel	1
1655	P1655	N1849	N1851	N1853	N478	gen_Steel	1
1656	P1656	N1851	N1852	N479	N1853	gen_Steel	1
1657	P1657	N456	N1789	N1854	N1852	gen_Steel	1
1658	P1658	N1789	N457	N1855	N1854	gen_Steel	1
1659	P1659	N1852	N1854	N1856	N479	gen_Steel	1
1660	P1660	N1854	N1855	N480	N1856	gen_Steel	1
1661	P1661	N457	N1792	N1857	N1855	gen_Steel	1
1662	P1662	N1792	N458	N1858	N1857	gen_Steel	1
1663	P1663	N1855	N1857	N1859	N480	gen_Steel	1
1664	P1664	N1857	N1858	N481	N1859	gen_Steel	1
1665	P1665	N458	N1795	N1860	N1858	gen_Steel	1
1666	P1666	N1795	N459	N1861	N1860	gen_Steel	1
1667	P1667	N1858	N1860	N1862	N481	gen_Steel	1
1668	P1668	N1860	N1861	N482	N1862	gen_Steel	1
1669	P1669	N459	N1798	N1863	N1861	gen_Steel	1
1670	P1670	N1798	N460	N1864	N1863	gen_Steel	1
1671	P1671	N1861	N1863	N1865	N482	gen_Steel	1
1672	P1672	N1863	N1864	N483	N1865	gen_Steel	1
1673	P1673	N460	N1801	N1866	N1864	gen_Steel	1
1674	P1674	N1801	N461	N1867	N1866	gen_Steel	1
1675	P1675	N1864	N1866	N1868	N483	gen_Steel	1
1676	P1676	N1866	N1867	N484	N1868	gen_Steel	1
1677	P1677	N461	N1804	N1869	N1867	gen_Steel	1
1678	P1678	N1804	N462	N1870	N1869	gen_Steel	1

Plate Primary Data (Continued)

	Label	A Joint	B Joint	C Joint	D Joint	Material	Thickness[in]
1679	P1679	N1867	N1869	N1871	N484	gen_Steel	1
1680	P1680	N1869	N1870	N485	N1871	gen_Steel	1
1681	P1681	N462	N1807	N1872	N1870	gen_Steel	1
1682	P1682	N1807	N463	N1873	N1872	gen_Steel	1
1683	P1683	N1870	N1872	N1874	N485	gen_Steel	1
1684	P1684	N1872	N1873	N486	N1874	gen_Steel	1
1685	P1685	N463	N1810	N1875	N1873	gen_Steel	1
1686	P1686	N1810	N464	N1876	N1875	gen_Steel	1
1687	P1687	N1873	N1875	N1877	N486	gen_Steel	1
1688	P1688	N1875	N1876	N487	N1877	gen_Steel	1
1689	P1689	N464	N1813	N1878	N1876	gen_Steel	1
1690	P1690	N1813	N465	N1879	N1878	gen_Steel	1
1691	P1691	N1876	N1878	N1880	N487	gen_Steel	1
1692	P1692	N1878	N1879	N488	N1880	gen_Steel	1
1693	P1693	N465	N1816	N1881	N1879	gen_Steel	1
1694	P1694	N1816	N466	N1882	N1881	gen_Steel	1
1695	P1695	N1879	N1881	N1883	N488	gen_Steel	1
1696	P1696	N1881	N1882	N489	N1883	gen_Steel	1
1697	P1697	N466	N1819	N1884	N1882	gen_Steel	1
1698	P1698	N1819	N467	N1885	N1884	gen_Steel	1
1699	P1699	N1882	N1884	N1886	N489	gen_Steel	1
1700	P1700	N1884	N1885	N490	N1886	gen_Steel	1
1701	P1701	N467	N1822	N1887	N1885	gen_Steel	1
1702	P1702	N1822	N468	N1888	N1887	gen_Steel	1
1703	P1703	N1885	N1887	N1889	N490	gen_Steel	1
1704	P1704	N1887	N1888	N491	N1889	gen_Steel	1
1705	P1705	N468	N1825	N1890	N1888	gen_Steel	1
1706	P1706	N1825	N469	N1891	N1890	gen_Steel	1
1707	P1707	N1888	N1890	N1892	N491	gen_Steel	1
1708	P1708	N1890	N1891	N492	N1892	gen_Steel	1
1709	P1709	N469	N1828	N1893	N1891	gen_Steel	1
1710	P1710	N1828	N470	N1894	N1893	gen_Steel	1
1711	P1711	N1891	N1893	N1895	N492	gen_Steel	1
1712	P1712	N1893	N1894	N493	N1895	gen_Steel	1
1713	P1713	N471	N1834	N1899	N1897	gen_Steel	1
1714	P1714	N1834	N472	N1900	N1899	gen_Steel	1
1715	P1715	N1897	N1899	N1901	N494	gen_Steel	1
1716	P1716	N1899	N1900	N495	N1901	gen_Steel	1
1717	P1717	N473	N1838	N1903	N1902	gen_Steel	1
1718	P1718	N1838	N474	N1904	N1903	gen_Steel	1
1719	P1719	N1902	N1903	N1905	N12	gen_Steel	1
1720	P1720	N1903	N1904	N496	N1905	gen_Steel	1
1721	P1721	N474	N1841	N1906	N1904	gen_Steel	1
1722	P1722	N1841	N475	N1907	N1906	gen_Steel	1
1723	P1723	N1904	N1906	N1908	N496	gen_Steel	1
1724	P1724	N1906	N1907	N497	N1908	gen_Steel	1
1725	P1725	N475	N1844	N1909	N1907	gen_Steel	1
1726	P1726	N1844	N476	N1910	N1909	gen_Steel	1
1727	P1727	N1907	N1909	N1911	N497	gen_Steel	1
1728	P1728	N1909	N1910	N498	N1911	gen_Steel	1
1729	P1729	N476	N1847	N1912	N1910	gen_Steel	1
1730	P1730	N1847	N477	N1913	N1912	gen_Steel	1
1731	P1731	N1910	N1912	N1914	N498	gen_Steel	1
1732	P1732	N1912	N1913	N499	N1914	gen_Steel	1
1733	P1733	N477	N1850	N1915	N1913	gen_Steel	1
1734	P1734	N1850	N478	N1916	N1915	gen_Steel	1
1735	P1735	N1913	N1915	N1917	N499	gen_Steel	1

Plate Primary Data (Continued)

	Label	A Joint	B Joint	C Joint	D Joint	Material	Thickness[in]
1736	P1736	N1915	N1916	N500	N1917	gen_Steel	1
1737	P1737	N478	N1853	N1918	N1916	gen_Steel	1
1738	P1738	N1853	N479	N1919	N1918	gen_Steel	1
1739	P1739	N1916	N1918	N1920	N500	gen_Steel	1
1740	P1740	N1918	N1919	N501	N1920	gen_Steel	1
1741	P1741	N479	N1856	N1921	N1919	gen_Steel	1
1742	P1742	N1856	N480	N1922	N1921	gen_Steel	1
1743	P1743	N1919	N1921	N1923	N501	gen_Steel	1
1744	P1744	N1921	N1922	N502	N1923	gen_Steel	1
1745	P1745	N480	N1859	N1924	N1922	gen_Steel	1
1746	P1746	N1859	N481	N1925	N1924	gen_Steel	1
1747	P1747	N1922	N1924	N1926	N502	gen_Steel	1
1748	P1748	N1924	N1925	N503	N1926	gen_Steel	1
1749	P1749	N481	N1862	N1927	N1925	gen_Steel	1
1750	P1750	N1862	N482	N1928	N1927	gen_Steel	1
1751	P1751	N1925	N1927	N1929	N503	gen_Steel	1
1752	P1752	N1927	N1928	N504	N1929	gen_Steel	1
1753	P1753	N482	N1865	N1930	N1928	gen_Steel	1
1754	P1754	N1865	N483	N1931	N1930	gen_Steel	1
1755	P1755	N1928	N1930	N1932	N504	gen_Steel	1
1756	P1756	N1930	N1931	N505	N1932	gen_Steel	1
1757	P1757	N483	N1868	N1933	N1931	gen_Steel	1
1758	P1758	N1868	N484	N1934	N1933	gen_Steel	1
1759	P1759	N1931	N1933	N1935	N505	gen_Steel	1
1760	P1760	N1933	N1934	N506	N1935	gen_Steel	1
1761	P1761	N484	N1871	N1936	N1934	gen_Steel	1
1762	P1762	N1871	N485	N1937	N1936	gen_Steel	1
1763	P1763	N1934	N1936	N1938	N506	gen_Steel	1
1764	P1764	N1936	N1937	N507	N1938	gen_Steel	1
1765	P1765	N485	N1874	N1939	N1937	gen_Steel	1
1766	P1766	N1874	N486	N1940	N1939	gen_Steel	1
1767	P1767	N1937	N1939	N1941	N507	gen_Steel	1
1768	P1768	N1939	N1940	N508	N1941	gen_Steel	1
1769	P1769	N486	N1877	N1942	N1940	gen_Steel	1
1770	P1770	N1877	N487	N1943	N1942	gen_Steel	1
1771	P1771	N1940	N1942	N1944	N508	gen_Steel	1
1772	P1772	N1942	N1943	N509	N1944	gen_Steel	1
1773	P1773	N487	N1880	N1945	N1943	gen_Steel	1
1774	P1774	N1880	N488	N1946	N1945	gen_Steel	1
1775	P1775	N1943	N1945	N1947	N509	gen_Steel	1
1776	P1776	N1945	N1946	N510	N1947	gen_Steel	1
1777	P1777	N488	N1883	N1948	N1946	gen_Steel	1
1778	P1778	N1883	N489	N1949	N1948	gen_Steel	1
1779	P1779	N1946	N1948	N1950	N510	gen_Steel	1
1780	P1780	N1948	N1949	N511	N1950	gen_Steel	1
1781	P1781	N489	N1886	N1951	N1949	gen_Steel	1
1782	P1782	N1886	N490	N1952	N1951	gen_Steel	1
1783	P1783	N1949	N1951	N1953	N511	gen_Steel	1
1784	P1784	N1951	N1952	N512	N1953	gen_Steel	1
1785	P1785	N490	N1889	N1954	N1952	gen_Steel	1
1786	P1786	N1889	N491	N1955	N1954	gen_Steel	1
1787	P1787	N1952	N1954	N1956	N512	gen_Steel	1
1788	P1788	N1954	N1955	N513	N1956	gen_Steel	1
1789	P1789	N491	N1892	N1957	N1955	gen_Steel	1
1790	P1790	N1892	N492	N1958	N1957	gen_Steel	1
1791	P1791	N1955	N1957	N1959	N513	gen_Steel	1
1792	P1792	N1957	N1958	N514	N1959	gen_Steel	1

Plate Primary Data (Continued)

	Label	A Joint	B Joint	C Joint	D Joint	Material	Thickness[in]
1793	P1793	N492	N1895	N1960	N1958	gen_Steel	1
1794	P1794	N1895	N493	N1961	N1960	gen_Steel	1
1795	P1795	N1958	N1960	N1962	N514	gen_Steel	1
1796	P1796	N1960	N1961	N515	N1962	gen_Steel	1
1797	P1797	N493	N1898	N1963	N1961	gen_Steel	1
1798	P1798	N1898	N494	N1964	N1963	gen_Steel	1
1799	P1799	N1961	N1963	N1965	N515	gen_Steel	1
1800	P1800	N1963	N1964	N516	N1965	gen_Steel	1
1801	P1801	N494	N1901	N1966	N1964	gen_Steel	1
1802	P1802	N1901	N495	N1967	N1966	gen_Steel	1
1803	P1803	N1964	N1966	N1968	N516	gen_Steel	1
1804	P1804	N1966	N1967	N11	N1968	gen_Steel	1
1805	P1805	N551	N283	N1969	N550	gen_Steel	1
1806	P1806	N550	N1969	N302	N549	gen_Steel	1
1807	P1807	N301	N540	N541	N1970	gen_Steel	1
1808	P1808	N1970	N541	N542	N322	gen_Steel	1
1809	P1809	N532	N1971	N227	N531	gen_Steel	1
1810	P1810	N246	N1971	N532	N533	gen_Steel	1
1811	P1811	N524	N207	N1972	N523	gen_Steel	1
1812	P1812	N523	N1972	N228	N522	gen_Steel	1
1813	P1813	N324	N553	N1469		gen_Steel	1
1814	P1814	N553	N302	N1401		gen_Steel	1
1815	P1815	N553	N1401	N325	N1469	gen_Steel	1
1816	P1816	N283	N1346	N1969		gen_Steel	1
1817	P1817	N1969	N1400	N302		gen_Steel	1
1818	P1818	N1969	N1346	N303	N1400	gen_Steel	1
1819	P1819	N228	N1146	N554		gen_Steel	1
1820	P1820	N1146	N229	N1196	N554	gen_Steel	1
1821	P1821	N554	N1196	N247		gen_Steel	1
1822	P1822	N207	N1087	N1972		gen_Steel	1
1823	P1823	N1087	N208	N1143	N1972	gen_Steel	1
1824	P1824	N1972	N1143	N228		gen_Steel	1
1825	P1825	N1078	N205	N555		gen_Steel	1
1826	P1826	N204	N1078	N555	N1141	gen_Steel	1
1827	P1827	N1141	N555	N227		gen_Steel	1
1828	P1828	N1142	N227	N1971		gen_Steel	1
1829	P1829	N226	N1142	N1971	N1194	gen_Steel	1
1830	P1830	N1194	N1971	N246		gen_Steel	1
1831	P1831	N282	N556	N1344		gen_Steel	1
1832	P1832	N1344	N556	N1396	N300	gen_Steel	1
1833	P1833	N556	N301	N1396		gen_Steel	1
1834	P1834	N301	N1970	N1398		gen_Steel	1
1835	P1835	N1398	N1970	N1457	N321	gen_Steel	1
1836	P1836	N1970	N322	N1457		gen_Steel	1
1837	P1837	N246	N533	N534	N1244	gen_Steel	1
1838	P1838	N1244	N534	N535	N264	gen_Steel	1
1839	P1839	N264	N535	N536	N1294	gen_Steel	1
1840	P1840	N1294	N536	N537	N282	gen_Steel	1
1841	P1841	N545	N546	N324	N1465	gen_Steel	1
1842	P1842	N544	N545	N1465	N323	gen_Steel	1
1843	P1843	N543	N544	N323	N1461	gen_Steel	1
1844	P1844	N542	N543	N1461	N322	gen_Steel	1
1845	P1845	N519	N247	N1246	N518	gen_Steel	1
1846	P1846	N518	N1246	N265	N517	gen_Steel	1
1847	P1847	N517	N265	N1296	N552	gen_Steel	1
1848	P1848	N552	N1296	N283	N551	gen_Steel	1
1849	P1849	N205	N1081	N527	N528	gen_Steel	1

Plate Primary Data (Continued)

	Label	A Joint	B Joint	C Joint	D Joint	Material	Thickness[in]
1850	P1850	N1081	N206	N526	N527	gen_Steel	1
1851	P1851	N206	N1084	N525	N526	gen_Steel	1
1852	P1852	N1084	N207	N524	N525	gen_Steel	1
1853	P1889	N1975	N2059A	N2066	N2010	gen_Steel	.5
1854	P1890	N2059A	N2060A	N2067	N2066	gen_Steel	.5
1855	P1891	N2060A	N2061	N2068	N2067	gen_Steel	.5
1856	P1892	N2061	N2062	N2069	N2068	gen_Steel	.5
1857	P1893	N2062	N2063	N2070	N2069	gen_Steel	.5
1858	P1894	N2063	N2064	N2071	N2070	gen_Steel	.5
1859	P1895	N2064	N2065	N2072	N2071	gen_Steel	.5
1860	P1896	N2065	N2011	N2046	N2072	gen_Steel	.5
1861	P1896A	N2010	N2066	N2073	N2009	gen_Steel	.5
1862	P1897	N2066	N2067	N2074	N2073	gen_Steel	.5
1863	P1898	N2067	N2068	N2075	N2074	gen_Steel	.5
1864	P1899	N2068	N2069	N2076	N2075	gen_Steel	.5
1865	P1900	N2069	N2070	N2077	N2076	gen_Steel	.5
1866	P1901	N2070	N2071	N2078	N2077	gen_Steel	.5
1867	P1902	N2071	N2072	N2079	N2078	gen_Steel	.5
1868	P1903	N2072	N2046	N2045	N2079	gen_Steel	.5
1869	P1903A	N2009	N2073	N2080	N2008	gen_Steel	.5
1870	P1904	N2073	N2074	N2081	N2080	gen_Steel	.5
1871	P1905	N2074	N2075	N2082	N2081	gen_Steel	.5
1872	P1906	N2075	N2076	N2083	N2082	gen_Steel	.5
1873	P1907	N2076	N2077	N2048	N2083	gen_Steel	.5
1874	P1908	N2077	N2078	N2085	N2048	gen_Steel	.5
1875	P1909	N2078	N2079	N2086	N2085	gen_Steel	.5
1876	P1910	N2079	N2045	N2044	N2086	gen_Steel	.5
1877	P1910A	N2008	N2080	N2087	N2007	gen_Steel	.5
1878	P1911	N2080	N2081	N2088	N2087	gen_Steel	.5
1879	P1912	N2081	N2082	N2089	N2088	gen_Steel	.5
1880	P1913	N2082	N2083	N2090	N2089	gen_Steel	.5
1881	P1914	N2083	N2048	N2091	N2090	gen_Steel	.5
1882	P1915	N2048	N2085	N2092	N2091	gen_Steel	.5
1883	P1916	N2085	N2086	N2093	N2092	gen_Steel	.5
1884	P1917	N2086	N2044	N2043	N2093	gen_Steel	.5
1885	P1917A	N2007	N2087	N2094	N2006	gen_Steel	.5
1886	P1918	N2087	N2088	N2095	N2094	gen_Steel	.5
1887	P1919	N2088	N2089	N2096	N2095	gen_Steel	.5
1888	P1920	N2089	N2090	N2097	N2096	gen_Steel	.5
1889	P1921	N2090	N2091	N2098	N2097	gen_Steel	.5
1890	P1922	N2091	N2092	N2099	N2098	gen_Steel	.5
1891	P1923	N2092	N2093	N2100	N2099	gen_Steel	.5
1892	P1924	N2093	N2043	N2042	N2100	gen_Steel	.5
1893	P1924A	N2006	N2094	N2101	N2005	gen_Steel	.5
1894	P1925	N2094	N2095	N2102	N2101	gen_Steel	.5
1895	P1926	N2095	N2096	N2103	N2102	gen_Steel	.5
1896	P1927	N2096	N2097	N2104	N2103	gen_Steel	.5
1897	P1928	N2097	N2098	N2105	N2104	gen_Steel	.5
1898	P1929	N2098	N2099	N2106	N2105	gen_Steel	.5
1899	P1930	N2099	N2100	N2107	N2106	gen_Steel	.5
1900	P1931	N2100	N2042	N2041	N2107	gen_Steel	.5
1901	P1931A	N2005	N2101	N2108	N2004	gen_Steel	.5
1902	P1932	N2101	N2102	N2109	N2108	gen_Steel	.5
1903	P1933	N2102	N2103	N2110	N2109	gen_Steel	.5
1904	P1934	N2103	N2104	N2111	N2110	gen_Steel	.5
1905	P1935	N2104	N2105	N2112	N2111	gen_Steel	.5
1906	P1936	N2105	N2106	N2113	N2112	gen_Steel	.5

Plate Primary Data (Continued)

	Label	A Joint	B Joint	C Joint	D Joint	Material	Thickness[in]
1907	P1937	N2106	N2107	N2114	N2113	gen_Steel	.5
1908	P1938	N2107	N2041	N2040	N2114	gen_Steel	.5
1909	P1938A	N2004	N2108	N2115	N2003	gen_Steel	.5
1910	P1939	N2108	N2109	N2116	N2115	gen_Steel	.5
1911	P1940	N2109	N2110	N2117	N2116	gen_Steel	.5
1912	P1941	N2110	N2111	N2118	N2117	gen_Steel	.5
1913	P1942	N2111	N2112	N2119	N2118	gen_Steel	.5
1914	P1943	N2112	N2113	N2120	N2119	gen_Steel	.5
1915	P1944	N2113	N2114	N2121	N2120	gen_Steel	.5
1916	P1945	N2114	N2040	N2039	N2121	gen_Steel	.5
1917	P1945A	N2003	N2115	N2122	N2002	gen_Steel	.5
1918	P1946	N2115	N2116	N2123	N2122	gen_Steel	.5
1919	P1947	N2116	N2117	N2124	N2123	gen_Steel	.5
1920	P1948	N2117	N2118	N2125	N2124	gen_Steel	.5
1921	P1949	N2118	N2119	N2126	N2125	gen_Steel	.5
1922	P1950	N2119	N2120	N2127	N2126	gen_Steel	.5
1923	P1951	N2120	N2121	N2128	N2127	gen_Steel	.5
1924	P1952	N2121	N2039	N2038	N2128	gen_Steel	.5
1925	P1952A	N1984	N2129	N2136	N1983	gen_Steel	.5
1926	P1953	N2129	N2130	N2137	N2136	gen_Steel	.5
1927	P1954	N2130	N2131	N2138	N2137	gen_Steel	.5
1928	P1955	N2131	N2132	N2139	N2138	gen_Steel	.5
1929	P1956	N2132	N2133	N2140	N2139	gen_Steel	.5
1930	P1957	N2133	N2134	N2141	N2140	gen_Steel	.5
1931	P1958	N2134	N2135	N2142	N2141	gen_Steel	.5
1932	P1959	N2135	N2020	N2019	N2142	gen_Steel	.5
1933	P1959A	N1983	N2136	N2143	N1982	gen_Steel	.5
1934	P1960	N2136	N2137	N2144	N2143	gen_Steel	.5
1935	P1961	N2137	N2138	N2145	N2144	gen_Steel	.5
1936	P1962	N2138	N2139	N2146	N2145	gen_Steel	.5
1937	P1963	N2139	N2140	N2147	N2146	gen_Steel	.5
1938	P1964	N2140	N2141	N2148	N2147	gen_Steel	.5
1939	P1965	N2141	N2142	N2149	N2148	gen_Steel	.5
1940	P1966	N2142	N2019	N2018	N2149	gen_Steel	.5
1941	P1966A	N1982	N2143	N2150	N1981	gen_Steel	.5
1942	P1967	N2143	N2144	N2151	N2150	gen_Steel	.5
1943	P1968	N2144	N2145	N2152	N2151	gen_Steel	.5
1944	P1969	N2145	N2146	N2153	N2152	gen_Steel	.5
1945	P1970	N2146	N2147	N2154	N2153	gen_Steel	.5
1946	P1971	N2147	N2148	N2155	N2154	gen_Steel	.5
1947	P1972	N2148	N2149	N2156	N2155	gen_Steel	.5
1948	P1973	N2149	N2018	N2017	N2156	gen_Steel	.5
1949	P1973A	N1981	N2150	N2157	N1980	gen_Steel	.5
1950	P1974	N2150	N2151	N2158	N2157	gen_Steel	.5
1951	P1975	N2151	N2152	N2159	N2158	gen_Steel	.5
1952	P1976	N2152	N2153	N2160	N2159	gen_Steel	.5
1953	P1977	N2153	N2154	N2161	N2160	gen_Steel	.5
1954	P1978	N2154	N2155	N2162	N2161	gen_Steel	.5
1955	P1979	N2155	N2156	N2163	N2162	gen_Steel	.5
1956	P1980	N2156	N2017	N2016	N2163	gen_Steel	.5
1957	P1980A	N1980	N2157	N2164	N1979	gen_Steel	.5
1958	P1981	N2157	N2158	N2165	N2164	gen_Steel	.5
1959	P1982	N2158	N2159	N2166	N2165	gen_Steel	.5
1960	P1983	N2159	N2160	N2167	N2166	gen_Steel	.5
1961	P1984	N2160	N2161	N2168	N2167	gen_Steel	.5
1962	P1985	N2161	N2162	N2169	N2168	gen_Steel	.5
1963	P1986	N2162	N2163	N2170	N2169	gen_Steel	.5

Plate Primary Data (Continued)

	Label	A Joint	B Joint	C Joint	D Joint	Material	Thickness[in]
1964	P1987	N2163	N2016	N2015	N2170	gen_Steel	.5
1965	P1987A	N1979	N2164	N2171	N1978	gen_Steel	.5
1966	P1988	N2164	N2165	N2172	N2171	gen_Steel	.5
1967	P1989	N2165	N2166	N2173	N2172	gen_Steel	.5
1968	P1990	N2166	N2167	N2174	N2173	gen_Steel	.5
1969	P1991	N2167	N2168	N2047	N2174	gen_Steel	.5
1970	P1992	N2168	N2169	N2176	N2047	gen_Steel	.5
1971	P1993	N2169	N2170	N2177	N2176	gen_Steel	.5
1972	P1994	N2170	N2015	N2014	N2177	gen_Steel	.5
1973	P1994A	N1978	N2171	N2178	N1977	gen_Steel	.5
1974	P1995	N2171	N2172	N2179	N2178	gen_Steel	.5
1975	P1996	N2172	N2173	N2180	N2179	gen_Steel	.5
1976	P1997	N2173	N2174	N2181	N2180	gen_Steel	.5
1977	P1998	N2174	N2047	N2182	N2181	gen_Steel	.5
1978	P1999	N2047	N2176	N2183	N2182	gen_Steel	.5
1979	P2000	N2176	N2177	N2184	N2183	gen_Steel	.5
1980	P2001	N2177	N2014	N2013	N2184	gen_Steel	.5
1981	P2001A	N1977	N2178	N2185	N1976	gen_Steel	.5
1982	P2002	N2178	N2179	N2186	N2185	gen_Steel	.5
1983	P2003	N2179	N2180	N2187	N2186	gen_Steel	.5
1984	P2004	N2180	N2181	N2188	N2187	gen_Steel	.5
1985	P2005	N2181	N2182	N2189	N2188	gen_Steel	.5
1986	P2006	N2182	N2183	N2190	N2189	gen_Steel	.5
1987	P2007	N2183	N2184	N2191	N2190	gen_Steel	.5
1988	P2008	N2184	N2013	N2012	N2191	gen_Steel	.5
1989	P2008A	N1976	N2185	N2059A	N1975	gen_Steel	.5
1990	P2009	N2185	N2186	N2060A	N2059A	gen_Steel	.5
1991	P2010	N2186	N2187	N2061	N2060A	gen_Steel	.5
1992	P2011	N2187	N2188	N2062	N2061	gen_Steel	.5
1993	P2012	N2188	N2189	N2063	N2062	gen_Steel	.5
1994	P2013	N2189	N2190	N2064	N2063	gen_Steel	.5
1995	P2014	N2190	N2191	N2065	N2064	gen_Steel	.5
1996	P2015	N2191	N2012	N2011	N2065	gen_Steel	.5
1997	P2015A	N1993	N2192	N2199	N1992	gen_Steel	.5
1998	P2016	N2192	N2193	N2200	N2199	gen_Steel	.5
1999	P2017	N2193	N2194	N2201	N2200	gen_Steel	.5
2000	P2018	N2194	N2195	N2202	N2201	gen_Steel	.5
2001	P2019	N2195	N2196	N2203	N2202	gen_Steel	.5
2002	P2020	N2196	N2197	N2204	N2203	gen_Steel	.5
2003	P2021	N2197	N2198	N2205	N2204	gen_Steel	.5
2004	P2022	N2198	N2029	N2028	N2205	gen_Steel	.5
2005	P2022A	N1992	N2199	N2206	N1991	gen_Steel	.5
2006	P2023	N2199	N2200	N2207	N2206	gen_Steel	.5
2007	P2024	N2200	N2201	N2208	N2207	gen_Steel	.5
2008	P2025	N2201	N2202	N2209	N2208	gen_Steel	.5
2009	P2026	N2202	N2203	N2210	N2209	gen_Steel	.5
2010	P2027	N2203	N2204	N2211	N2210	gen_Steel	.5
2011	P2028	N2204	N2205	N2212	N2211	gen_Steel	.5
2012	P2029	N2205	N2028	N2027	N2212	gen_Steel	.5
2013	P2029A	N1991	N2206	N2213	N1990	gen_Steel	.5
2014	P2030	N2206	N2207	N2214	N2213	gen_Steel	.5
2015	P2031	N2207	N2208	N2215	N2214	gen_Steel	.5
2016	P2032	N2208	N2209	N2216	N2215	gen_Steel	.5
2017	P2033	N2209	N2210	N2217	N2216	gen_Steel	.5
2018	P2034	N2210	N2211	N2218	N2217	gen_Steel	.5
2019	P2035	N2211	N2212	N2219	N2218	gen_Steel	.5
2020	P2036	N2212	N2027	N2026	N2219	gen_Steel	.5

Plate Primary Data (Continued)

	Label	A Joint	B Joint	C Joint	D Joint	Material	Thickness[in]
2021	P2036A	N1990	N2213	N2220	N1989	gen_Steel	.5
2022	P2037	N2213	N2214	N2221	N2220	gen_Steel	.5
2023	P2038	N2214	N2215	N2222	N2221	gen_Steel	.5
2024	P2039	N2215	N2216	N2223	N2222	gen_Steel	.5
2025	P2040	N2216	N2217	N2224	N2223	gen_Steel	.5
2026	P2041	N2217	N2218	N2225	N2224	gen_Steel	.5
2027	P2042	N2218	N2219	N2226	N2225	gen_Steel	.5
2028	P2043	N2219	N2026	N2025	N2226	gen_Steel	.5
2029	P2043A	N1989	N2220	N2227	N1988	gen_Steel	.5
2030	P2044	N2220	N2221	N2228	N2227	gen_Steel	.5
2031	P2045	N2221	N2222	N2229	N2228	gen_Steel	.5
2032	P2046	N2222	N2223	N2230	N2229	gen_Steel	.5
2033	P2047	N2223	N2224	N2231	N2230	gen_Steel	.5
2034	P2048	N2224	N2225	N2232	N2231	gen_Steel	.5
2035	P2049	N2225	N2226	N2233	N2232	gen_Steel	.5
2036	P2050	N2226	N2025	N2024	N2233	gen_Steel	.5
2037	P2050A	N1988	N2227	N2234	N1987	gen_Steel	.5
2038	P2051	N2227	N2228	N2235	N2234	gen_Steel	.5
2039	P2052	N2228	N2229	N2049	N2235	gen_Steel	.5
2040	P2053	N2229	N2230	N2237	N2049	gen_Steel	.5
2041	P2054	N2230	N2231	N2238	N2237	gen_Steel	.5
2042	P2055	N2231	N2232	N2239	N2238	gen_Steel	.5
2043	P2056	N2232	N2233	N2240	N2239	gen_Steel	.5
2044	P2057	N2233	N2024	N2023	N2240	gen_Steel	.5
2045	P2057A	N1987	N2234	N2241	N1986	gen_Steel	.5
2046	P2058	N2234	N2235	N2242	N2241	gen_Steel	.5
2047	P2059	N2235	N2049	N2243	N2242	gen_Steel	.5
2048	P2060	N2049	N2237	N2244	N2243	gen_Steel	.5
2049	P2061	N2237	N2238	N2245	N2244	gen_Steel	.5
2050	P2062	N2238	N2239	N2246	N2245	gen_Steel	.5
2051	P2063	N2239	N2240	N2247	N2246	gen_Steel	.5
2052	P2064	N2240	N2023	N2022	N2247	gen_Steel	.5
2053	P2064A	N1986	N2241	N2248	N1985	gen_Steel	.5
2054	P2065	N2241	N2242	N2249	N2248	gen_Steel	.5
2055	P2066	N2242	N2243	N2250	N2249	gen_Steel	.5
2056	P2067	N2243	N2244	N2251	N2250	gen_Steel	.5
2057	P2068	N2244	N2245	N2252	N2251	gen_Steel	.5
2058	P2069	N2245	N2246	N2253	N2252	gen_Steel	.5
2059	P2070	N2246	N2247	N2254	N2253	gen_Steel	.5
2060	P2071	N2247	N2022	N2021	N2254	gen_Steel	.5
2061	P2071A	N1985	N2248	N2129	N1984	gen_Steel	.5
2062	P2072	N2248	N2249	N2130	N2129	gen_Steel	.5
2063	P2073	N2249	N2250	N2131	N2130	gen_Steel	.5
2064	P2074	N2250	N2251	N2132	N2131	gen_Steel	.5
2065	P2075	N2251	N2252	N2133	N2132	gen_Steel	.5
2066	P2076	N2252	N2253	N2134	N2133	gen_Steel	.5
2067	P2077	N2253	N2254	N2135	N2134	gen_Steel	.5
2068	P2078	N2254	N2021	N2020	N2135	gen_Steel	.5
2069	P2078A	N2002	N2122	N2255	N2001	gen_Steel	.5
2070	P2079	N2122	N2123	N2256	N2255	gen_Steel	.5
2071	P2080	N2123	N2124	N2257	N2256	gen_Steel	.5
2072	P2081	N2124	N2125	N2258	N2257	gen_Steel	.5
2073	P2082	N2125	N2126	N2259	N2258	gen_Steel	.5
2074	P2083	N2126	N2127	N2260	N2259	gen_Steel	.5
2075	P2084	N2127	N2128	N2261	N2260	gen_Steel	.5
2076	P2085	N2128	N2038	N2037	N2261	gen_Steel	.5
2077	P2085A	N2001	N2255	N2262	N2000	gen_Steel	.5

Plate Primary Data (Continued)

	Label	A Joint	B Joint	C Joint	D Joint	Material	Thickness[in]
2078	P2086	N2255	N2256	N2263	N2262	gen_Steel	.5
2079	P2087	N2256	N2257	N2264	N2263	gen_Steel	.5
2080	P2088	N2257	N2258	N2265	N2264	gen_Steel	.5
2081	P2089	N2258	N2259	N2266	N2265	gen_Steel	.5
2082	P2090	N2259	N2260	N2267	N2266	gen_Steel	.5
2083	P2091	N2260	N2261	N2268	N2267	gen_Steel	.5
2084	P2092	N2261	N2037	N2036	N2268	gen_Steel	.5
2085	P2092A	N2000	N2262	N2269	N1999	gen_Steel	.5
2086	P2093	N2262	N2263	N2270	N2269	gen_Steel	.5
2087	P2094	N2263	N2264	N2050	N2270	gen_Steel	.5
2088	P2095	N2264	N2265	N2272	N2050	gen_Steel	.5
2089	P2096	N2265	N2266	N2273	N2272	gen_Steel	.5
2090	P2097	N2266	N2267	N2274	N2273	gen_Steel	.5
2091	P2098	N2267	N2268	N2275	N2274	gen_Steel	.5
2092	P2099	N2268	N2036	N2035	N2275	gen_Steel	.5
2093	P2099A	N1999	N2269	N2276	N1998	gen_Steel	.5
2094	P2100	N2269	N2270	N2277	N2276	gen_Steel	.5
2095	P2101	N2270	N2050	N2278	N2277	gen_Steel	.5
2096	P2102	N2050	N2272	N2279	N2278	gen_Steel	.5
2097	P2103	N2272	N2273	N2280	N2279	gen_Steel	.5
2098	P2104	N2273	N2274	N2281	N2280	gen_Steel	.5
2099	P2105	N2274	N2275	N2282	N2281	gen_Steel	.5
2100	P2106	N2275	N2035	N2034	N2282	gen_Steel	.5
2101	P2106A	N1998	N2276	N2283	N1997	gen_Steel	.5
2102	P2107	N2276	N2277	N2284	N2283	gen_Steel	.5
2103	P2108	N2277	N2278	N2285	N2284	gen_Steel	.5
2104	P2109	N2278	N2279	N2286	N2285	gen_Steel	.5
2105	P2110	N2279	N2280	N2287	N2286	gen_Steel	.5
2106	P2111	N2280	N2281	N2288	N2287	gen_Steel	.5
2107	P2112	N2281	N2282	N2289	N2288	gen_Steel	.5
2108	P2113	N2282	N2034	N2033	N2289	gen_Steel	.5
2109	P2113A	N1997	N2283	N2290	N1996	gen_Steel	.5
2110	P2114	N2283	N2284	N2291	N2290	gen_Steel	.5
2111	P2115	N2284	N2285	N2292	N2291	gen_Steel	.5
2112	P2116	N2285	N2286	N2293	N2292	gen_Steel	.5
2113	P2117	N2286	N2287	N2294	N2293	gen_Steel	.5
2114	P2118	N2287	N2288	N2295	N2294	gen_Steel	.5
2115	P2119	N2288	N2289	N2296	N2295	gen_Steel	.5
2116	P2120	N2289	N2033	N2032	N2296	gen_Steel	.5
2117	P2120A	N1996	N2290	N2297	N1995	gen_Steel	.5
2118	P2121	N2290	N2291	N2298	N2297	gen_Steel	.5
2119	P2122	N2291	N2292	N2299	N2298	gen_Steel	.5
2120	P2123	N2292	N2293	N2300	N2299	gen_Steel	.5
2121	P2124	N2293	N2294	N2301	N2300	gen_Steel	.5
2122	P2125	N2294	N2295	N2302	N2301	gen_Steel	.5
2123	P2126	N2295	N2296	N2303	N2302	gen_Steel	.5
2124	P2127	N2296	N2032	N2031	N2303	gen_Steel	.5
2125	P2127A	N1995	N2297	N2304	N1994	gen_Steel	.5
2126	P2128	N2297	N2298	N2305	N2304	gen_Steel	.5
2127	P2129	N2298	N2299	N2306	N2305	gen_Steel	.5
2128	P2130	N2299	N2300	N2307	N2306	gen_Steel	.5
2129	P2131	N2300	N2301	N2308	N2307	gen_Steel	.5
2130	P2132	N2301	N2302	N2309	N2308	gen_Steel	.5
2131	P2133	N2302	N2303	N2310	N2309	gen_Steel	.5
2132	P2134	N2303	N2031	N2030	N2310	gen_Steel	.5
2133	P2134A	N1994	N2304	N2192	N1993	gen_Steel	.5
2134	P2135	N2304	N2305	N2193	N2192	gen_Steel	.5

Plate Primary Data (Continued)

	Label	A Joint	B Joint	C Joint	D Joint	Material	Thickness[in]
2135	P2136	N2305	N2306	N2194	N2193	gen_Steel	.5
2136	P2137	N2306	N2307	N2195	N2194	gen_Steel	.5
2137	P2138	N2307	N2308	N2196	N2195	gen_Steel	.5
2138	P2139	N2308	N2309	N2197	N2196	gen_Steel	.5
2139	P2140	N2309	N2310	N2198	N2197	gen_Steel	.5
2140	P2141	N2310	N2030	N2029	N2198	gen_Steel	.5

Joint Loads and Enforced Displacements (BLC 4 : Thermal)

	Joint Label	L,D,M	Direction	Magnitude[(lb,lb-ft), (in,rad), (lb*s^2/in, lb*s^2*in)]
1	N1	L	X	350
2	N1	L	Y	-150
3	N1	L	Z	50
4	N1	L	Mx	25
5	N1	L	My	225
6	N1	L	Mz	175
7	N1974	L	X	450
8	N1974	L	Y	-100
9	N1974	L	Z	50
10	N1974	L	Mx	100
11	N1974	L	My	550
12	N1974	L	Mz	125

Joint Loads and Enforced Displacements (BLC 5 : Primary Seismic)

	Joint Label	L,D,M	Direction	Magnitude[(lb,lb-ft), (in,rad), (lb*s^2/in, lb*s^2*in)]
1	N1	L	X	300
2	N1	L	Y	-50
3	N1	L	Z	50
4	N1	L	Mx	25
5	N1	L	My	250
6	N1	L	Mz	75

Joint Loads and Enforced Displacements (BLC 7 : GT1P1)

	Joint Label	L,D,M	Direction	Magnitude[(lb,lb-ft), (in,rad), (lb*s^2/in, lb*s^2*in)]
1	N3364	L	X	419
2	N3364	L	Y	-491
3	N3364	L	Z	12
4	N3364	L	Mx	12
5	N3364	L	My	3
6	N3364	L	Mz	49

Joint Loads and Enforced Displacements (BLC 8 : GE5)

	Joint Label	L,D,M	Direction	Magnitude[(lb,lb-ft), (in,rad), (lb*s^2/in, lb*s^2*in)]
1	N3364	L	X	31
2	N3364	L	Y	-84
3	N3364	L	Z	26
4	N3364	L	Mx	73
5	N3364	L	My	2
6	N3364	L	Mz	49

Columbia Energy AND ENVIRONMENTAL SERVICES

Company : CEES
Designer : JDY
Job Number :
Model Name : 242A Pump Room Wall Nozzles

Apr 16, 2020
11:48 AM
Checked By: RDL

Basic Load Cases

	BLC Description	Category	X Gravity	Y Gravity	Z Gravity	Joint	Point	Distributed	Area(Me...	Surface(...
1	SW	DL		-1						
4	Thermal	OL1				12				
5	Primary Seismic	OL2				6				
7	GT1P1	OL3				6				
8	GE5	OL4				6				

Load Combinations

	Description	Sol...	PD...	S...	BLC	Fa...	BLC	Fa...	BLC	Fa...	BLC	Fa...	BLC	Fa...	BLC	Fa...	B...	Fa...	B...	Fa...	B...	Fa...	B...	Fa...
1	1.2DL + 1.2Thermal +..	Yes	Y		DL	1.2	OL1	1.2	OL3	1.2														
2	1.2DL + 1.4GE5 + 1.4..	Yes	Y		DL	1.2	OL2	1.4	OL4	1.4														

Envelope AISC 14th(360-10): LRFD Steel Code Checks

	Member	Shape	Code C...	Loc[in]	LC	Shear ...	Loc[in]	Dir	LC	phi*Pnc [lb]	phi*Pnt [lb]	phi*Mn y-...	phi*Mn z-...	Cb	Eqn
1	M1	PIPE_4.0	.160	8.938	1	.133	9.167		1	92242.896	93240	10631.25	10631.25	1....	H1-1b
2	M104	BackPlate	.036	20.75	1	.031	3.891	y	2	32793.19	97200	1012.5	12150	2....	H1-1b
3	M105	BackPlate	.048	20.75	1	.031	20.75	y	2	32793.19	97200	1012.5	12150	2....	H1-1b
4	M107	BackPlate	.075	3	1	.081	3	y	2	88748.021	97200	1012.5	12150	1....	H1-1b
5	M181A	PIPE_4.0	.067	1	1	.018	0		1	93107.536	93240	10631.25	10631.25	4....	H1-1b

Envelope Plate/Shell Principal Stresses

	Plate		Sur...	Sigma1 [ksi]	LC	Sigma2 [ksi]	LC	Tau Max [k...	LC	Angle [rad]	LC	Von Mises [ksi]	LC
1	P1	max	T	.981	1	.294	1	.344	1	.813	1	.872	1
2		min		.632	2	.188	2	.222	2	.728	2	.562	2
3		max	B	-.217	2	-.726	2	.404	1	-.689	1	1.015	1
4		min		-.332	1	-1.139	1	.255	2	-.744	2	.646	2
5	P2	max	T	.949	1	.415	1	.267	1	.687	1	.824	1
6		min		.646	2	.262	2	.192	2	.586	2	.562	2
7		max	B	-.274	2	-.746	2	.348	1	2.355	1	.978	1
8		min		-.422	1	-1.118	1	.236	2	2.285	2	.654	2
9	P3	max	T	.836	1	.396	1	.22	1	.423	1	.724	1
10		min		.609	2	.261	2	.174	2	.367	2	.529	2
11		max	B	-.273	2	-.71	2	.298	1	2.161	1	.871	1
12		min		-.404	1	-.999	1	.218	2	2.11	2	.62	2
13	P4	max	T	2.596	1	.776	1	.91	1	2.314	2	2.308	1
14		min		.616	2	.184	2	.216	2	-.748	1	.548	2
15		max	B	-.163	2	-.544	2	.885	1	.824	1	2.244	1
16		min		-.754	1	-2.524	1	.191	2	.807	2	.484	2
17	P5	max	T	2.539	1	.96	1	.79	1	2.299	1	2.221	1
18		min		.633	2	.239	2	.197	2	2.195	2	.553	2
19		max	B	-.233	2	-.571	2	.761	1	.723	1	2.165	1
20		min		-.956	1	-2.479	1	.169	2	.657	2	.498	2
21	P6	max	T	2.212	1	.859	1	.677	1	2.135	1	1.932	1
22		min		.602	2	.242	2	.18	2	2.011	2	.525	2
23		max	B	-.24	2	-.561	2	.656	1	.549	1	1.897	1
24		min		-.863	1	-2.175	1	.161	2	.437	2	.488	2
25	P7	max	T	2.916	1	.866	1	1.025	1	.728	1	2.594	1
26		min		.612	2	.17	2	.221	2	.633	2	.547	2
27		max	B	-.138	2	-.521	2	.966	1	-.593	2	2.452	1
28		min		-.827	1	-2.758	1	.191	2	-.768	1	.467	2
29	P8	max	T	3.035	1	1.144	1	.945	1	.603	1	2.655	1
30		min		.62	2	.223	2	.198	2	.517	2	.544	2
31		max	B	-.204	2	-.53	2	.876	1	2.238	1	2.513	1

Envelope Plate/Shell Principal Stresses (Continued)

	Plate		Sur...	Sigma1 [ksi]	LC	Sigma2 [ksi]	LC	Tau Max [k...	LC	Angle [rad]	LC	Von Mises [ksi]	LC
32		min		-1.128	1	-2.88	1	.163	2	-.722	2	.463	2
33	P9	max	T	2.922	1	1.156	1	.883	1	.423	1	2.549	1
34		min		.582	2	.223	2	.18	2	.335	2	.508	2
35		max	B	-.206	2	-.496	2	.821	1	2.2	2	2.421	1
36		min		-1.139	1	-2.78	1	.145	2	2.044	1	.432	2
37	P10	max	T	1.326	1	.357	1	.484	1	2.192	2	1.188	1
38		min		.625	2	.172	2	.227	2	2.175	1	.559	2
39		max	B	-.19	2	-.698	2	.48	1	.956	2	1.216	1
40		min		-.409	1	-1.368	1	.254	2	.824	1	.625	2
41	P11	max	T	1.497	1	.547	1	.475	1	2.046	2	1.312	1
42		min		.635	2	.243	2	.196	2	2.006	1	.555	2
43		max	B	-.241	2	-.707	2	.462	1	.849	2	1.325	1
44		min		-.594	1	-1.518	1	.233	2	.658	1	.623	2
45	P12	max	T	1.616	1	.63	1	.493	1	1.832	2	1.411	1
46		min		.595	2	.236	2	.179	2	1.797	1	.519	2
47		max	B	-.23	2	-.655	2	.466	1	.678	2	1.401	1
48		min		-.68	1	-1.612	1	.212	2	.441	1	.575	2
49	P13	max	T	-.006	2	-.076	2	.131	1	2.354	2	.283	1
50		min		-.039	1	-.301	1	.035	2	-.771	1	.073	2
51		max	B	.299	1	.059	1	.12	1	.801	1	.274	1
52		min		.074	2	.017	2	.028	2	.782	2	.067	2
53	P14	max	T	-.016	2	-.132	2	.217	1	-.635	1	.494	1
54		min		-.103	1	-.537	1	.058	2	-.71	2	.125	2
55		max	B	.543	1	.143	1	.2	1	1.01	2	.487	1
56		min		.134	2	.041	2	.047	2	1.001	1	.119	2
57	P15	max	T	-.016	2	-.132	2	.213	1	2.27	2	.484	1
58		min		-.1	1	-.526	1	.058	2	2.252	1	.125	2
59		max	B	.53	1	.144	1	.193	1	.62	1	.475	1
60		min		.135	2	.041	2	.047	2	.555	2	.12	2
61	P16	max	T	-.081	2	-.479	2	.748	1	2.347	2	1.718	1
62		min		-.381	1	-1.876	1	.199	2	-.772	1	.444	2
63		max	B	1.834	1	.445	1	.694	1	.804	1	1.657	1
64		min		.454	2	.119	2	.167	2	.79	2	.407	2
65	P17	max	T	-.031	2	-.167	2	.294	1	-.441	1	.674	1
66		min		-.146	1	-.735	1	.068	2	-.554	2	.154	2
67		max	B	.786	1	.169	1	.308	1	1.207	2	.717	1
68		min		.194	2	.045	2	.074	2	1.206	1	.176	2
69	P18	max	T	-.014	2	-.185	2	.402	1	-.39	1	.84	1
70		min		-.069	1	-.873	1	.085	2	-.485	2	.178	2
71		max	B	.964	1	.075	1	.445	1	1.228	1	.929	1
72		min		.233	2	.018	2	.108	2	1.209	2	.225	2
73	P19	max	T	-.074	2	-.424	2	.662	1	2.112	1	1.506	1
74		min		-.314	1	-1.638	1	.175	2	2.088	2	.392	2
75		max	B	1.605	1	.354	1	.625	1	.542	1	1.46	1
76		min		.406	2	.092	2	.157	2	.525	2	.369	2
77	P20	max	T	-.057	2	-.272	2	.37	1	2.261	1	.911	1
78		min		-.279	1	-1.018	1	.108	2	2.198	2	.248	2
79		max	B	.965	1	.31	1	.327	1	.738	1	.853	1
80		min		.244	2	.067	2	.088	2	.718	2	.218	2
81	P21	max	T	-.003	2	-.196	2	.454	1	-.375	1	.92	1
82		min		-.022	1	-.931	1	.097	2	-.447	2	.194	2
83		max	B	1.024	1	.014	1	.505	1	1.212	1	1.017	1
84		min		.244	2	-.005	2	.124	2	1.159	2	.246	2
85	P22	max	T	0	2	-.212	2	.468	1	-.323	1	.95	1
86		min		-.026	1	-.962	1	.106	2	-.389	2	.212	2
87		max	B	1.025	1	.022	1	.501	1	1.248	1	1.014	1
88		min		.24	2	-.006	2	.123	2	1.163	2	.243	2

Envelope Plate/Shell Principal Stresses (Continued)

	Plate		Sur...	Sigma1 [ksi]	LC	Sigma2 [ksi]	LC	Tau Max [k...	LC	Angle [rad]	LC	Von Mises [ksi]	LC
89	P23	max	T	-.06	2	-.286	2	.497	1	-.487	1	1.157	1
90		min		-.276	1	-1.27	1	.113	2	-.593	2	.261	2
91		max	B	1.375	1	.239	1	.568	1	1.109	1	1.273	1
92		min		.339	2	.028	2	.155	2	1.025	2	.326	2
93	P24	max	T	-.019	2	-.277	2	.536	1	-.499	1	1.141	1
94		min		-.126	1	-1.199	1	.129	2	-.567	2	.268	2
95		max	B	1.29	1	.118	1	.586	1	1.073	1	1.236	1
96		min		.324	2	.004	2	.16	2	.983	2	.322	2
97	P25	max	T	.003	2	-.201	2	.424	1	-.287	1	.854	1
98		min		-.01	1	-.859	1	.102	2	-.347	2	.202	2
99		max	B	.893	1	.009	1	.442	1	1.281	1	.889	1
100		min		.206	2	-.008	2	.107	2	1.186	2	.21	2
101	P26	max	T	.003	2	-.167	2	.334	1	-.276	1	.672	1
102		min		-.008	1	-.676	1	.085	2	-.33	2	.168	2
103		max	B	.689	1	.005	1	.342	1	1.288	1	.687	1
104		min		.158	2	-.008	2	.083	2	1.183	2	.162	2
105	P27	max	T	-.004	2	-.244	2	.473	1	-.495	1	.981	1
106		min		-.068	1	-1.013	1	.12	2	-.556	2	.242	2
107		max	B	1.081	1	.059	1	.511	1	1.074	1	1.053	1
108		min		.275	2	-.008	2	.142	2	.981	2	.279	2
109	P28	max	T	.003	2	-.197	2	.372	1	-.499	1	.762	1
110		min		-.037	1	-.78	1	.1	2	-.557	2	.199	2
111		max	B	.827	1	.028	1	.399	1	1.068	1	.813	1
112		min		.214	2	-.015	2	.114	2	.97	2	.221	2
113	P29	max	T	.003	2	-.126	2	.236	1	-.285	1	.474	1
114		min		-.005	1	-.476	1	.065	2	-.337	2	.128	2
115		max	B	.476	1	.002	1	.237	1	1.273	1	.475	1
116		min		.108	2	-.009	2	.058	2	1.141	2	.113	2
117	P30	max	T	.004	2	-.086	2	.143	1	-.332	1	.287	1
118		min		0	1	-.287	1	.045	2	-.375	2	.088	2
119		max	B	.277	1	-.005	1	.141	1	1.209	1	.279	1
120		min		.063	2	-.012	2	.038	2	1.024	2	.07	2
121	P31	max	T	.007	2	-.148	2	.268	1	-.527	1	.543	1
122		min		-.016	1	-.551	1	.078	2	-.579	2	.152	2
123		max	B	.582	1	.006	1	.288	1	1.037	1	.579	1
124		min		.155	2	-.02	2	.087	2	.931	2	.165	2
125	P32	max	T	.011	2	-.104	2	.177	1	-.606	1	.352	1
126		min		.006	1	-.349	1	.057	2	-.633	2	.11	2
127		max	B	.367	1	-.019	1	.193	1	.953	1	.377	1
128		min		.104	2	-.026	2	.065	2	.848	2	.119	2
129	P33	max	T	.013	1	-.05	2	.067	1	-.48	2	.128	1
130		min		.006	2	-.121	1	.028	2	-.531	1	.053	2
131		max	B	.108	1	-.021	2	.066	1	.943	1	.122	1
132		min		.029	2	-.024	1	.025	2	.744	2	.044	2
133	P34	max	T	.081	1	-.021	2	.055	1	1.932	1	.098	1
134		min		.012	2	-.028	1	.017	2	-.776	2	.029	2
135		max	B	.027	1	-.043	2	.07	1	.378	2	.128	1
136		min		.012	2	-.112	1	.027	2	.305	1	.05	2
137	P35	max	T	.043	1	-.067	2	.114	1	2.334	1	.21	1
138		min		.017	2	-.186	1	.042	2	-.744	2	.076	2
139		max	B	.197	1	-.036	2	.129	1	.749	1	.233	1
140		min		.064	2	-.06	1	.05	2	.701	2	.088	2
141	P36	max	T	.118	1	-.038	2	.102	1	2.206	2	.177	1
142		min		.026	2	-.085	1	.032	2	1.984	1	.056	2
143		max	B	.093	1	-.053	2	.117	1	.503	2	.204	1
144		min		.037	2	-.141	1	.045	2	.423	1	.078	2
145	P37	max	T	.207	1	-.008	2	.109	1	1.929	2	.213	1

Envelope Plate/Shell Principal Stresses (Continued)

	Plate		Sur...	Sigma1 [ksi]	LC	Sigma2 [ksi]	LC	Tau Max [k...	LC	Angle [rad]	LC	Von Mises [ksi]	LC
146		min		.029	2	-.011	1	.018	2	1.662	1	.034	2
147		max	B	.012	1	-.072	2	.13	1	.185	2	.254	1
148		min		.006	2	-.248	1	.039	2	.091	1	.075	2
149	P38	max	T	.329	1	-.003	2	.168	1	1.728	2	.332	1
150		min		.052	2	-.006	1	.028	2	1.595	1	.054	2
151		max	B	.006	1	-.1	2	.191	1	.101	2	.38	1
152		min		.003	2	-.377	1	.052	2	.03	1	.102	2
153	P39	max	T	.23	1	-.021	2	.136	1	1.976	2	.253	1
154		min		.043	2	-.041	1	.032	2	1.742	1	.056	2
155		max	B	.045	1	-.075	2	.152	1	.324	2	.284	1
156		min		.021	2	-.258	1	.048	2	.193	1	.088	2
157	P40	max	T	.346	1	-.011	2	.183	1	1.807	2	.357	1
158		min		.063	2	-.02	1	.037	2	1.638	1	.069	2
159		max	B	.023	1	-.1	2	.201	1	.204	2	.392	1
160		min		.012	2	-.38	1	.056	2	.087	1	.107	2
161	P41	max	T	.438	1	-.002	2	.221	1	1.651	2	.44	1
162		min		.075	2	-.003	1	.038	2	1.571	1	.076	2
163		max	B	.003	1	-.126	2	.247	1	.06	2	.493	1
164		min		.002	2	-.492	1	.064	2	.007	1	.127	2
165	P42	max	T	.534	1	0	1	.267	1	1.615	2	.534	1
166		min		.095	2	0	2	.048	2	1.561	1	.096	2
167		max	B	0	2	-.148	2	.296	1	.037	2	.593	1
168		min		0	1	-.593	1	.075	2	-.004	1	.149	2
169	P43	max	T	.453	1	-.006	2	.23	1	1.71	2	.457	1
170		min		.083	2	-.008	1	.045	2	1.591	1	.087	2
171		max	B	.009	1	-.124	2	.251	1	.131	2	.497	1
172		min		.007	2	-.493	1	.065	2	.038	1	.127	2
173	P44	max	T	.548	1	.001	1	.273	1	1.656	2	.547	1
174		min		.103	2	-.003	2	.053	2	1.569	1	.104	2
175		max	B	.004	2	-.145	2	.296	1	.086	2	.592	1
176		min		0	1	-.592	1	.075	2	.013	1	.147	2
177	P45	max	T	.615	1	.002	1	.307	1	1.598	2	.615	1
178		min		.113	2	0	2	.056	2	1.557	1	.113	2
179		max	B	0	2	-.168	2	.339	1	.024	2	.678	1
180		min		-.001	1	-.679	1	.084	2	-.009	1	.168	2
181	P46	max	T	.683	1	.003	1	.34	1	1.588	2	.682	1
182		min		.128	2	0	2	.064	2	1.556	1	.128	2
183		max	B	0	2	-.184	2	.374	1	.015	2	.749	1
184		min		-.003	1	-.751	1	.092	2	-.011	1	.184	2
185	P47	max	T	.629	1	.008	1	.311	1	1.626	2	.625	1
186		min		.12	2	0	2	.06	2	1.559	1	.12	2
187		max	B	.002	2	-.164	2	.336	1	.058	2	.675	1
188		min		-.007	1	-.678	1	.083	2	0	1	.165	2
189	P48	max	T	.697	1	.013	1	.342	1	1.609	2	.69	1
190		min		.134	2	0	2	.067	2	1.554	1	.134	2
191		max	B	0	2	-.18	2	.369	1	.038	2	.744	1
192		min		-.012	1	-.75	1	.09	2	-.008	1	.18	2
193	P49	max	T	.737	1	.004	1	.367	1	1.583	2	.736	1
194		min		.14	2	0	2	.07	2	1.557	1	.14	2
195		max	B	0	2	-.197	2	.402	1	.01	2	.806	1
196		min		-.004	1	-.808	1	.098	2	-.011	1	.197	2
197	P50	max	T	.778	1	.005	1	.387	1	1.58	2	.775	1
198		min		.149	2	0	2	.075	2	1.558	1	.149	2
199		max	B	0	2	-.206	2	.423	1	.006	2	.847	1
200		min		-.004	1	-.85	1	.103	2	-.011	1	.206	2
201	P51	max	T	.751	1	.017	1	.367	1	1.599	2	.743	1
202		min		.147	2	.002	2	.072	2	1.553	1	.146	2

Envelope Plate/Shell Principal Stresses (Continued)

	Plate		Sur...	Sigma1 [ksi]	LC	Sigma2 [ksi]	LC	Tau Max [k...	LC	Angle [rad]	LC	Von Mises [ksi]	LC
203		max	B	0	2	-.193	2	.396	1	.025	2	.799	1
204		min		-.015	1	-.807	1	.096	2	-.012	1	.192	2
205	P52	max	T	.791	1	.019	1	.386	1	1.593	2	.781	1
206		min		.156	2	.002	2	.077	2	1.553	1	.155	2
207		max	B	-.002	2	-.202	2	.415	1	.015	2	.84	1
208		min		-.018	1	-.849	1	.1	2	-.014	1	.201	2
209	P53	max	T	.804	1	.005	1	.399	1	1.579	2	.801	1
210		min		.156	2	0	2	.078	2	1.56	1	.156	2
211		max	B	0	2	-.212	2	.436	1	.003	2	.874	1
212		min		-.005	1	-.876	1	.106	2	-.01	1	.212	2
213	P54	max	T	.816	1	.005	1	.405	1	1.578	2	.814	1
214		min		.16	2	0	2	.08	2	1.562	1	.16	2
215		max	B	0	2	-.214	2	.441	1	.001	2	.886	1
216		min		-.005	1	-.888	1	.107	2	-.009	1	.214	2
217	P55	max	T	.817	1	.021	1	.398	1	1.59	2	.807	1
218		min		.163	2	.003	2	.08	2	1.554	1	.161	2
219		max	B	-.002	2	-.208	2	.428	1	.008	2	.866	1
220		min		-.02	1	-.875	1	.103	2	-.015	1	.207	2
221	P56	max	T	.829	1	.022	1	.403	1	1.588	2	.818	1
222		min		.167	2	.003	2	.082	2	1.555	1	.165	2
223		max	B	-.002	2	-.21	2	.433	1	0	2	.877	1
224		min		-.021	1	-.887	1	.104	2	-.015	1	.209	2
225	P57	max	T	.815	1	.006	1	.405	1	1.575	2	.812	1
226		min		.162	2	0	2	.081	2	1.564	1	.162	2
227		max	B	0	2	-.213	2	.44	1	-.003	2	.882	1
228		min		-.005	1	-.885	1	.106	2	-.007	1	.213	2
229	P58	max	T	.799	1	.005	1	.397	1	1.576	2	.796	1
230		min		.161	2	0	2	.08	2	1.566	1	.161	2
231		max	B	0	2	-.209	2	.431	1	-.004	2	.864	1
232		min		-.005	1	-.867	1	.104	2	-.006	1	.209	2
233	P59	max	T	.827	1	.022	1	.402	1	1.587	2	.816	1
234		min		.168	2	.003	2	.082	2	1.557	1	.167	2
235		max	B	-.002	2	-.21	2	.431	1	-.006	2	.874	1
236		min		-.021	1	-.884	1	.104	2	-.016	1	.208	2
237	P60	max	T	.811	1	.022	1	.395	1	1.585	2	.8	1
238		min		.167	2	.003	2	.082	2	1.559	1	.165	2
239		max	B	-.002	2	-.205	2	.423	1	-.012	2	.856	1
240		min		-.021	1	-.866	1	.102	2	-.016	1	.204	2
241	P61	max	T	.77	1	.005	1	.382	1	1.577	2	.767	1
242		min		.157	2	0	2	.078	2	1.567	1	.157	2
243		max	B	0	2	-.201	2	.414	1	-.005	2	.831	1
244		min		-.005	1	-.834	1	.1	2	-.005	1	.201	2
245	P62	max	T	.727	1	.004	1	.361	1	1.574	2	.724	1
246		min		.15	2	0	2	.075	2	1.568	1	.15	2
247		max	B	0	2	-.189	2	.391	1	-.005	1	.784	1
248		min		-.004	1	-.786	1	.095	2	-.01	2	.189	2
249	P63	max	T	.781	1	.021	1	.38	1	1.582	2	.771	1
250		min		.162	2	.002	2	.08	2	1.56	1	.161	2
251		max	B	-.002	2	-.198	2	.407	1	-.017	1	.824	1
252		min		-.019	1	-.833	1	.098	2	-.02	2	.197	2
253	P64	max	T	.738	1	.018	1	.36	1	1.577	2	.729	1
254		min		.156	2	.002	2	.077	2	1.559	1	.155	2
255		max	B	0	2	-.187	2	.385	1	-.019	1	.778	1
256		min		-.017	1	-.786	1	.093	2	-.031	2	.186	2
257	P65	max	T	.67	1	.004	1	.333	1	1.57	2	.669	1
258		min		.14	2	0	2	.07	2	1.569	1	.14	2
259		max	B	0	2	-.175	2	.361	1	-.005	1	.723	1

Envelope Plate/Shell Principal Stresses (Continued)

	Plate		Sur...	Sigma1 [ksi]	LC	Sigma2 [ksi]	LC	Tau Max [k...	LC	Angle [rad]	LC	Von Mises [ksi]	LC
260		min		-.003	1	-.725	1	.087	2	-.016	2	.175	2
261	P66	max	T	.601	1	.002	1	.299	1	1.567	1	.6	1
262		min		.128	2	0	2	.064	2	1.562	2	.128	2
263		max	B	0	2	-.157	2	.324	1	-.008	1	.649	1
264		min		-.002	1	-.65	1	.078	2	-.025	2	.157	2
265	P67	max	T	.681	1	.015	1	.333	1	1.568	2	.674	1
266		min		.146	2	0	2	.073	2	1.557	1	.146	2
267		max	B	0	2	-.172	2	.356	1	-.023	1	.719	1
268		min		-.014	1	-.726	1	.087	2	-.045	2	.173	2
269	P68	max	T	.612	1	.01	1	.301	1	1.553	2	.607	1
270		min		.133	2	0	2	.067	2	1.552	1	.134	2
271		max	B	.002	2	-.155	2	.321	1	-.03	1	.647	1
272		min		-.009	1	-.651	1	.079	2	-.066	2	.156	2
273	P69	max	T	.518	1	0	1	.259	1	1.562	1	.518	1
274		min		.112	2	0	2	.057	2	1.548	2	.113	2
275		max	B	.001	2	-.135	2	.281	1	-.013	1	.562	1
276		min		0	1	-.562	1	.068	2	-.04	2	.136	2
277	P70	max	T	.423	1	-.002	2	.213	1	1.551	1	.424	1
278		min		.094	2	-.002	1	.048	2	1.522	2	.095	2
279		max	B	.002	2	-.111	2	.231	1	-.025	1	.462	1
280		min		.002	1	-.461	1	.056	2	-.068	2	.112	2
281	P71	max	T	.53	1	.003	1	.263	1	1.539	1	.528	1
282		min		.118	2	-.003	2	.06	2	1.528	2	.119	2
283		max	B	.004	2	-.135	2	.281	1	-.044	1	.563	1
284		min		-.003	1	-.564	1	.069	2	-.098	2	.137	2
285	P72	max	T	.435	1	-.006	1	.221	1	1.514	1	.438	1
286		min		.099	2	-.006	2	.053	2	1.485	2	.102	2
287		max	B	.008	2	-.112	2	.236	1	-.071	1	.468	1
288		min		.007	1	-.465	1	.06	2	-.15	2	.116	2
289	P73	max	T	.315	1	-.003	2	.16	1	1.523	1	.318	1
290		min		.073	2	-.005	1	.038	2	1.472	2	.074	2
291		max	B	.005	1	-.084	2	.176	1	-.052	1	.35	1
292		min		.003	2	-.347	1	.044	2	-.121	2	.085	2
293	P74	max	T	.196	1	-.006	2	.104	1	1.448	1	.202	1
294		min		.049	2	-.011	1	.027	2	1.362	2	.052	2
295		max	B	.012	1	-.054	2	.117	1	-.122	1	.228	1
296		min		.007	2	-.222	1	.03	2	-.241	2	.058	2
297	P75	max	T	.33	1	-.01	2	.175	1	1.462	1	.34	1
298		min		.079	2	-.019	1	.045	2	1.412	2	.085	2
299		max	B	.021	1	-.087	2	.188	1	-.125	1	.365	1
300		min		.013	2	-.354	1	.05	2	-.238	2	.094	2
301	P76	max	T	.218	1	-.018	2	.13	1	1.347	1	.241	1
302		min		.058	2	-.041	1	.038	2	1.283	2	.069	2
303		max	B	.044	1	-.062	2	.141	1	-.24	1	.263	1
304		min		.024	2	-.237	1	.043	2	-.384	2	.077	2
305	P77	max	T	.075	1	-.013	2	.053	1	1.146	1	.095	1
306		min		.026	2	-.031	1	.02	2	1.093	2	.035	2
307		max	B	.03	1	-.027	2	.062	1	-.383	1	.112	1
308		min		.016	2	-.093	1	.022	2	-.542	2	.038	2
309	P78	max	T	.014	1	-.033	2	.071	1	.698	2	.135	1
310		min		.013	2	-.127	1	.023	2	.51	1	.041	2
311		max	B	.12	1	-.012	2	.07	1	2.195	2	.132	1
312		min		.042	2	-.02	1	.027	2	2.13	1	.049	2
313	P79	max	T	.113	1	-.032	2	.101	1	1.095	1	.176	1
314		min		.039	2	-.089	1	.036	2	1.086	2	.062	2
315		max	B	.094	1	-.041	2	.111	1	-.482	1	.194	1
316		min		.042	2	-.128	1	.042	2	-.592	2	.072	2

Envelope Plate/Shell Principal Stresses (Continued)

	Plate		Sur...	Sigma1 [ksi]	LC	Sigma2 [ksi]	LC	Tau Max [k...	LC	Angle [rad]	LC	Von Mises [ksi]	LC
317	P80	max	T	.045	1	-.057	2	.118	1	.876	2	.218	1
318		min		.026	2	-.192	1	.041	2	.769	1	.073	2
319		max	B	.2	1	-.027	2	.128	1	2.352	2	.233	1
320		min		.073	2	-.055	1	.05	2	2.347	1	.09	2
321	P81	max	T	.008	2	-.066	2	.145	1	.489	2	.289	1
322		min		.002	1	-.288	1	.037	2	.326	1	.071	2
323		max	B	.285	1	-.004	1	.145	1	2.005	2	.287	1
324		min		.081	2	-.007	2	.044	2	1.911	1	.085	2
325	P82	max	T	.006	2	-.106	2	.234	1	.41	2	.471	1
326		min		-.003	1	-.472	1	.056	2	.279	1	.11	2
327		max	B	.476	1	.002	1	.237	1	1.935	2	.475	1
328		min		.128	2	-.005	2	.067	2	1.855	1	.131	2
329	P83	max	T	.018	2	-.092	2	.181	1	.731	2	.357	1
330		min		.01	1	-.351	1	.055	2	.586	1	.103	2
331		max	B	.365	1	-.017	1	.191	1	2.224	2	.374	1
332		min		.116	2	-.019	2	.067	2	2.162	1	.126	2
333	P84	max	T	.014	2	-.137	2	.268	1	.653	2	.541	1
334		min		-.012	1	-.548	1	.075	2	.512	1	.144	2
335		max	B	.568	1	.007	1	.281	1	2.157	2	.565	1
336		min		.168	2	-.013	2	.091	2	2.085	1	.175	2
337	P85	max	T	.006	2	-.149	2	.33	1	.385	2	.663	1
338		min		-.007	1	-.666	1	.078	2	.269	1	.152	2
339		max	B	.678	1	.006	1	.336	1	1.913	2	.675	1
340		min		.177	2	-.005	2	.091	2	1.842	1	.18	2
341	P86	max	T	.007	2	-.187	2	.417	1	.394	2	.84	1
342		min		-.01	1	-.845	1	.097	2	.278	1	.19	2
343		max	B	.869	1	.01	1	.43	1	1.921	2	.864	1
344		min		.224	2	-.004	2	.114	2	1.85	1	.226	2
345	P87	max	T	.01	2	-.187	2	.368	1	.619	2	.753	1
346		min		-.033	1	-.769	1	.099	2	.486	1	.193	2
347		max	B	.799	1	.029	1	.385	1	2.128	2	.785	1
348		min		.227	2	-.008	2	.118	2	2.057	1	.231	2
349	P88	max	T	.004	2	-.237	2	.465	1	.613	2	.965	1
350		min		-.065	1	-.995	1	.121	2	.482	1	.24	2
351		max	B	1.038	1	.061	1	.489	1	2.123	2	1.009	1
352		min		.288	2	0	2	.144	2	2.052	1	.288	2
353	P89	max	T	.005	2	-.204	2	.462	1	.43	2	.937	1
354		min		-.025	1	-.95	1	.104	2	.312	1	.206	2
355		max	B	.99	1	.024	1	.483	1	1.95	2	.978	1
356		min		.252	2	-.001	2	.127	2	1.882	1	.253	2
357	P90	max	T	.001	2	-.192	2	.454	1	.477	2	.917	1
358		min		-.017	1	-.925	1	.097	2	.362	1	.193	2
359		max	B	.982	1	.013	1	.485	1	1.964	2	.976	1
360		min		.252	2	0	2	.126	2	1.923	1	.252	2
361	P91	max	T	-.008	2	-.274	2	.527	1	.62	2	1.12	1
362		min		-.122	1	-1.176	1	.133	2	.484	1	.27	2
363		max	B	1.233	1	.119	1	.557	1	2.123	2	1.178	1
364		min		.335	2	.015	2	.16	2	2.052	1	.328	2
365	P92	max	T	-.046	2	-.286	2	.499	1	.647	2	1.142	1
366		min		-.249	1	-1.246	1	.12	2	.465	1	.266	2
367		max	B	1.312	1	.229	1	.542	1	2.08	2	1.214	1
368		min		.35	2	.045	2	.153	2	2.019	1	.33	2
369	P93	max	T	-.012	2	-.185	2	.401	1	.506	2	.835	1
370		min		-.061	1	-.864	1	.087	2	.372	1	.179	2
371		max	B	.92	1	.065	1	.428	1	1.92	2	.889	1
372		min		.24	2	.021	2	.109	2	1.913	1	.23	2
373	P94	max	T	-.03	2	-.17	2	.288	1	.564	2	.657	1

Envelope Plate/Shell Principal Stresses (Continued)

	Plate		Sur...	Sigma1 [ksi]	LC	Sigma2 [ksi]	LC	Tau Max [k...	LC	Angle [rad]	LC	Von Mises [ksi]	LC
374		min		-.139	1	-.716	1	.07	2	.416	1	.157	2
375		max	B	.747	1	.153	1	.297	1	1.938	1	.684	1
376		min		.197	2	.048	2	.074	2	1.928	2	.178	2
377	P95	max	T	-.048	2	-.284	2	.34	1	.945	2	.843	1
378		min		-.262	1	-.943	1	.118	2	.851	1	.264	2
379		max	B	.909	1	.283	1	.313	1	-.713	2	.806	1
380		min		.244	2	.08	2	.082	2	-.753	1	.215	2
381	P96	max	T	-.069	2	-.435	2	.621	1	1.045	2	1.413	1
382		min		-.294	1	-1.537	1	.183	2	1.019	1	.405	2
383		max	B	1.515	1	.321	1	.597	1	-.51	2	1.383	1
384		min		.412	2	.102	2	.155	2	-.551	1	.372	2
385	P97	max	T	-.017	2	-.135	2	.204	1	.71	2	.469	1
386		min		-.105	1	-.513	1	.059	2	.613	1	.127	2
387		max	B	.516	1	.128	1	.194	1	2.142	1	.465	1
388		min		.136	2	.042	2	.047	2	2.136	2	.121	2
389	P98	max	T	-.006	2	-.077	2	.122	1	.789	2	.267	1
390		min		-.04	1	-.285	1	.036	2	.763	1	.074	2
391		max	B	.283	1	.052	1	.116	1	2.333	1	.261	1
392		min		.076	2	.018	2	.029	2	-.779	2	.069	2
393	P99	max	T	-.083	2	-.488	2	.701	1	.791	2	1.62	1
394		min		-.371	1	-1.773	1	.203	2	.763	1	.453	2
395		max	B	1.746	1	.41	1	.668	1	2.331	1	1.582	1
396		min		.462	2	.121	2	.17	2	-.781	2	.415	2
397	P100	max	T	-.017	2	-.135	2	.198	1	.887	1	.455	1
398		min		-.101	1	-.497	1	.059	2	.874	2	.128	2
399		max	B	.499	1	.129	1	.185	1	-.548	2	.449	1
400		min		.138	2	.042	2	.048	2	-.644	1	.122	2
401	P101	max	T	-.026	2	-.169	2	.268	1	2.13	2	.625	1
402		min		-.152	1	-.687	1	.072	2	2.08	1	.158	2
403		max	B	.733	1	.189	1	.272	1	.409	1	.659	1
404		min		.197	2	.048	2	.075	2	.332	2	.178	2
405	P102	max	T	-.055	2	-.425	2	.683	1	-.51	1	1.556	1
406		min		-.327	1	-1.694	1	.185	2	-.548	2	.401	2
407		max	B	1.653	1	.402	1	.626	1	1.077	1	1.493	1
408		min		.399	2	.107	2	.146	2	1.066	2	.358	2
409	P103	max	T	-.006	2	-.182	2	.346	1	2.088	2	.732	1
410		min		-.075	1	-.766	1	.088	2	2.031	1	.18	2
411		max	B	.871	1	.098	1	.386	1	.376	1	.826	1
412		min		.248	2	.022	2	.113	2	.32	2	.238	2
413	P104	max	T	-.031	2	-.282	2	.422	1	-.614	1	.997	1
414		min		-.255	1	-1.1	1	.126	2	-.647	2	.268	2
415		max	B	1.013	1	.345	1	.334	1	.927	1	.892	1
416		min		.228	2	.091	2	.068	2	.816	2	.198	2
417	P105	max	T	-.116	2	-.359	2	.585	1	-.368	1	1.478	1
418		min		-.492	1	-1.661	1	.122	2	-.389	2	.318	2
419		max	B	1.844	1	.461	1	.692	1	1.167	1	1.663	1
420		min		.456	2	.084	2	.186	2	1.078	2	.42	2
421	P106	max	T	-.092	2	-.308	2	.457	1	-.56	1	1.176	1
422		min		-.412	1	-1.327	1	.108	2	-.628	2	.274	2
423		max	B	1.452	1	.391	1	.531	1	1.008	1	1.302	1
424		min		.374	2	.069	2	.152	2	.911	2	.345	2
425	P107	max	T	-.167	2	-.535	2	.805	1	-.389	1	2.043	1
426		min		-.688	1	-2.298	1	.184	2	-.39	2	.474	2
427		max	B	2.482	1	.656	1	.913	1	1.142	1	2.228	1
428		min		.634	2	.134	2	.25	2	1.066	2	.578	2
429	P108	max	T	-.157	2	-.326	2	.368	1	-.589	1	1.215	1
430		min		-.667	1	-1.403	1	.084	2	-.648	2	.282	2

Envelope Plate/Shell Principal Stresses (Continued)

	Plate		Sur...	Sigma1 [ksi]	LC	Sigma2 [ksi]	LC	Tau Max [k...	LC	Angle [rad]	LC	Von Mises [ksi]	LC
431		max	B	1.562	1	.654	1	.454	1	.962	1	1.359	1
432		min		.413	2	.143	2	.135	2	.857	2	.364	2
433	P109	max	T	-.049	2	-.252	2	.396	1	-.613	1	.943	1
434		min		-.251	1	-1.043	1	.101	2	-.674	2	.231	2
435		max	B	1.14	1	.239	1	.45	1	.96	1	1.041	1
436		min		.301	2	.035	2	.133	2	.871	2	.286	2
437	P110	max	T	-.024	2	-.196	2	.316	1	-.645	1	.718	1
438		min		-.147	1	-.78	1	.086	2	-.702	2	.185	2
439		max	B	.853	1	.134	1	.36	1	.932	1	.795	1
440		min		.232	2	.009	2	.111	2	.847	2	.227	2
441	P111	max	T	-.089	2	-.242	2	.298	1	-.709	1	.874	1
442		min		-.407	1	-1.004	1	.076	2	-.783	2	.212	2
443		max	B	1.126	1	.389	1	.368	1	.873	1	.99	1
444		min		.308	2	.073	2	.117	2	.787	2	.278	2
445	P112	max	T	-.05	2	-.183	2	.241	1	2.296	2	.643	1
446		min		-.249	1	-.73	1	.067	2	-.779	1	.164	2
447		max	B	.826	1	.231	1	.298	1	.818	1	.738	1
448		min		.234	2	.034	2	.1	2	.745	2	.219	2
449	P113	max	T	-.008	2	-.146	2	.235	1	-.697	1	.515	1
450		min		-.078	1	-.549	1	.069	2	-.742	2	.142	2
451		max	B	.605	1	.063	1	.271	1	.884	1	.576	1
452		min		.171	2	-.008	2	.089	2	.805	2	.175	2
453	P114	max	T	.005	2	-.103	2	.17	1	2.336	1	.349	1
454		min		-.016	1	-.357	1	.054	2	2.328	2	.106	2
455		max	B	.398	1	0	1	.199	1	.785	1	.398	1
456		min		.12	2	-.022	2	.071	2	.731	2	.133	2
457	P115	max	T	-.022	2	-.135	2	.191	1	2.285	1	.461	1
458		min		-.131	1	-.512	1	.056	2	2.238	2	.126	2
459		max	B	.586	1	.112	1	.237	1	.756	1	.539	1
460		min		.174	2	.005	2	.084	2	.703	2	.171	2
461	P116	max	T	0	2	-.097	2	.155	1	2.158	1	.326	1
462		min		-.03	1	-.34	1	.048	2	2.156	2	.096	2
463		max	B	.395	1	.013	1	.191	1	.652	1	.389	1
464		min		.125	2	-.018	2	.072	2	.636	2	.135	2
465	P117	max	T	.056	1	-.069	2	.134	1	2.21	2	.244	1
466		min		.018	2	-.211	1	.044	2	2.138	1	.08	2
467		max	B	.239	1	-.038	2	.156	1	.616	2	.283	1
468		min		.081	2	-.074	1	.059	2	.607	1	.105	2
469	P118	max	T	.152	1	-.044	2	.135	1	2.053	2	.234	1
470		min		.034	2	-.117	1	.039	2	1.904	1	.067	2
471		max	B	.134	1	-.057	2	.152	1	.474	2	.263	1
472		min		.052	2	-.169	1	.055	2	.386	1	.095	2
473	P119	max	T	.072	1	-.066	2	.142	1	2.046	2	.256	1
474		min		.02	2	-.212	1	.043	2	1.987	1	.078	2
475		max	B	.25	1	-.039	2	.168	1	.543	2	.302	1
476		min		.087	2	-.086	1	.063	2	.501	1	.112	2
477	P120	max	T	.183	1	-.044	2	.153	1	1.925	2	.267	1
478		min		.041	2	-.124	1	.042	2	1.826	1	.073	2
479		max	B	.148	1	-.061	2	.171	1	.435	2	.297	1
480		min		.059	2	-.194	1	.06	2	.34	1	.103	2
481	P121	max	T	.263	1	-.027	2	.163	1	1.898	2	.3	1
482		min		.053	2	-.063	1	.04	2	1.742	1	.07	2
483		max	B	.073	1	-.079	2	.178	1	.338	2	.325	1
484		min		.032	2	-.282	1	.056	2	.218	1	.1	2
485	P122	max	T	.374	1	-.016	2	.202	1	1.782	2	.39	1
486		min		.073	2	-.029	1	.044	2	1.654	1	.082	2
487		max	B	.035	1	-.102	2	.216	1	.234	2	.416	1

Envelope Plate/Shell Principal Stresses (Continued)

	Plate		Sur...	Sigma1 [ksi]	LC	Sigma2 [ksi]	LC	Tau Max [k...	LC	Angle [rad]	LC	Von Mises [ksi]	LC
488		min		.02	2	-.397	1	.061	2	.12	1	.114	2
489	P123	max	T	.296	1	-.027	2	.18	1	1.82	2	.333	1
490		min		.062	2	-.064	1	.045	2	1.716	1	.079	2
491		max	B	.08	1	-.083	2	.193	1	.33	2	.354	1
492		min		.038	2	-.307	1	.061	2	.215	1	.107	2
493	P124	max	T	.404	1	-.015	2	.213	1	1.742	2	.416	1
494		min		.083	2	-.022	1	.049	2	1.651	1	.092	2
495		max	B	.033	1	-.106	2	.226	1	.243	2	.436	1
496		min		.023	2	-.419	1	.065	2	.134	1	.119	2
497	P125	max	T	.477	1	-.006	1	.242	1	1.708	2	.48	1
498		min		.093	2	-.008	2	.051	2	1.608	1	.098	2
499		max	B	.012	2	-.125	2	.258	1	.162	2	.51	1
500		min		.01	1	-.505	1	.068	2	.066	1	.131	2
501	P126	max	T	.569	1	.011	1	.279	1	1.662	2	.563	1
502		min		.112	2	-.003	2	.057	2	1.583	1	.113	2
503		max	B	.006	2	-.145	2	.297	1	.113	2	.598	1
504		min		-.007	1	-.602	1	.076	2	.035	1	.149	2
505	P127	max	T	.504	1	.009	1	.247	1	1.69	2	.5	1
506		min		.103	2	-.007	2	.055	2	1.613	1	.106	2
507		max	B	.013	2	-.127	2	.261	1	.178	2	.522	1
508		min		-.001	1	-.523	1	.07	2	.083	1	.134	2
509	P128	max	T	.593	1	.033	1	.28	1	1.655	2	.578	1
510		min		.121	2	0	2	.06	2	1.59	1	.121	2
511		max	B	.005	2	-.147	2	.295	1	.129	2	.604	1
512		min		-.026	1	-.616	1	.076	2	.051	1	.15	2
513	P129	max	T	.648	1	.024	1	.312	1	1.634	2	.636	1
514		min		.128	2	0	2	.064	2	1.57	1	.128	2
515		max	B	.002	2	-.164	2	.332	1	.079	2	.675	1
516		min		-.02	1	-.685	1	.083	2	.016	1	.165	2
517	P130	max	T	.714	1	.033	1	.341	1	1.617	2	.698	1
518		min		.142	2	.003	2	.07	2	1.562	1	.141	2
519		max	B	0	2	-.179	2	.363	1	.055	2	.741	1
520		min		-.03	1	-.755	1	.089	2	.004	1	.178	2
521	P131	max	T	.671	1	.051	1	.31	1	1.633	2	.647	1
522		min		.137	2	.005	2	.066	2	1.576	1	.134	2
523		max	B	0	2	-.165	2	.327	1	.094	2	.677	1
524		min		-.045	1	-.698	1	.082	2	.03	1	.165	2
525	P132	max	T	.736	1	.065	1	.335	1	1.619	2	.706	1
526		min		.151	2	.009	2	.071	2	1.568	1	.146	2
527		max	B	-.004	2	-.179	2	.354	1	.066	2	.739	1
528		min		-.059	1	-.767	1	.088	2	.015	1	.177	2
529	P133	max	T	.767	1	.041	1	.363	1	1.607	2	.748	1
530		min		.154	2	.005	2	.074	2	1.558	1	.151	2
531		max	B	-.003	2	-.191	2	.387	1	.037	2	.793	1
532		min		-.037	1	-.811	1	.094	2	-.004	1	.19	2
533	P134	max	T	.807	1	.046	1	.381	1	1.601	2	.785	1
534		min		.163	2	.007	2	.078	2	1.556	1	.16	2
535		max	B	-.004	2	-.2	2	.405	1	.022	2	.832	1
536		min		-.042	1	-.853	1	.098	2	-.009	1	.198	2
537	P135	max	T	.789	1	.076	1	.356	1	1.611	2	.753	1
538		min		.162	2	.012	2	.075	2	1.562	1	.156	2
539		max	B	-.007	2	-.191	2	.376	1	.045	2	.79	1
540		min		-.069	1	-.822	1	.092	2	.004	1	.188	2
541	P136	max	T	.828	1	.083	1	.372	1	1.605	2	.789	1
542		min		.171	2	.014	2	.079	2	1.559	1	.164	2
543		max	B	-.009	2	-.2	2	.393	1	.027	2	.827	1
544		min		-.077	1	-.863	1	.096	2	-.004	1	.196	2

Envelope Plate/Shell Principal Stresses (Continued)

	Plate		Sur...	Sigma1 [ksi]	LC	Sigma2 [ksi]	LC	Tau Max [k...	LC	Angle [rad]	LC	Von Mises [ksi]	LC
545	P137	max	T	.833	1	.049	1	.392	1	1.597	2	.809	1
546		min		.17	2	.008	2	.081	2	1.555	1	.166	2
547		max	B	-.005	2	-.206	2	.417	1	.01	2	.857	1
548		min		-.046	1	-.879	1	.1	2	-.013	1	.204	2
549	P138	max	T	.844	1	.051	1	.397	1	1.595	2	.82	1
550		min		.174	2	.008	2	.083	2	1.554	1	.17	2
551		max	B	-.006	2	-.209	2	.422	1	0	2	.868	1
552		min		-.048	1	-.891	1	.102	2	-.017	1	.206	2
553	P139	max	T	.853	1	.089	1	.382	1	1.602	2	.812	1
554		min		.177	2	.015	2	.081	2	1.556	1	.17	2
555		max	B	-.01	2	-.206	2	.404	1	.012	2	.851	1
556		min		-.082	1	-.889	1	.098	2	-.011	1	.201	2
557	P140	max	T	.864	1	.091	1	.386	1	1.6	2	.822	1
558		min		.181	2	.015	2	.083	2	1.554	1	.174	2
559		max	B	-.011	2	-.209	2	.408	1	-.002	2	.862	1
560		min		-.085	1	-.901	1	.099	2	-.018	1	.203	2
561	P141	max	T	.842	1	.052	1	.395	1	1.592	2	.817	1
562		min		.175	2	.008	2	.083	2	1.554	1	.171	2
563		max	B	-.006	2	-.208	2	.42	1	-.011	2	.865	1
564		min		-.048	1	-.888	1	.101	2	-.02	1	.205	2
565	P142	max	T	.826	1	.05	1	.388	1	1.59	2	.802	1
566		min		.173	2	.007	2	.083	2	1.554	1	.17	2
567		max	B	-.005	2	-.204	2	.411	1	-.022	2	.847	1
568		min		-.047	1	-.87	1	.099	2	-.023	1	.201	2
569	P143	max	T	.861	1	.092	1	.385	1	1.598	2	.82	1
570		min		.182	2	.015	2	.083	2	1.551	1	.175	2
571		max	B	-.011	2	-.208	2	.406	1	-.016	2	.858	1
572		min		-.086	1	-.898	1	.099	2	-.024	1	.203	2
573	P144	max	T	.845	1	.09	1	.378	1	1.595	2	.804	1
574		min		.181	2	.014	2	.083	2	1.549	1	.174	2
575		max	B	-.01	2	-.204	2	.398	1	-.03	1	.841	1
576		min		-.084	1	-.88	1	.097	2	-.031	2	.199	2
577	P145	max	T	.796	1	.048	1	.374	1	1.586	2	.773	1
578		min		.169	2	.006	2	.081	2	1.552	1	.166	2
579		max	B	-.004	2	-.197	2	.396	1	-.027	1	.816	1
580		min		-.045	1	-.838	1	.096	2	-.034	2	.195	2
581	P146	max	T	.753	1	.043	1	.355	1	1.58	2	.732	1
582		min		.162	2	.005	2	.079	2	1.55	1	.16	2
583		max	B	-.003	2	-.186	2	.375	1	-.033	1	.772	1
584		min		-.04	1	-.791	1	.092	2	-.049	2	.185	2
585	P147	max	T	.815	1	.085	1	.365	1	1.591	2	.776	1
586		min		.176	2	.013	2	.082	2	1.546	1	.17	2
587		max	B	-.009	2	-.197	2	.384	1	-.037	1	.811	1
588		min		-.08	1	-.848	1	.094	2	-.046	2	.193	2
589	P148	max	T	.772	1	.078	1	.347	1	1.585	2	.736	1
590		min		.17	2	.011	2	.079	2	1.542	1	.164	2
591		max	B	-.007	2	-.187	2	.364	1	-.045	1	.768	1
592		min		-.074	1	-.802	1	.09	2	-.064	2	.184	2
593	P149	max	T	.696	1	.036	1	.33	1	1.57	2	.679	1
594		min		.152	2	.003	2	.075	2	1.545	1	.151	2
595		max	B	0	2	-.173	2	.349	1	-.04	1	.715	1
596		min		-.034	1	-.731	1	.086	2	-.068	2	.172	2
597	P150	max	T	.628	1	.027	1	.301	1	1.554	2	.615	1
598		min		.14	2	0	2	.07	2	1.536	1	.14	2
599		max	B	.002	2	-.156	2	.317	1	-.052	1	.647	1
600		min		-.025	1	-.659	1	.079	2	-.095	2	.157	2
601	P151	max	T	.716	1	.068	1	.324	1	1.576	2	.684	1

Envelope Plate/Shell Principal Stresses (Continued)

	Plate		Sur...	Sigma1 [ksi]	LC	Sigma2 [ksi]	LC	Tau Max [k...	LC	Angle [rad]	LC	Von Mises [ksi]	LC
602		min		.16	2	.008	2	.076	2	1.535	1	.156	2
603		max	B	-.004	2	-.175	2	.339	1	-.056	1	.713	1
604		min		-.064	1	-.743	1	.085	2	-.086	2	.173	2
605	P152	max	T	.648	1	.055	1	.296	1	1.562	2	.622	1
606		min		.148	2	.004	2	.072	2	1.525	1	.146	2
607		max	B	0	2	-.159	2	.31	1	-.07	1	.647	1
608		min		-.051	1	-.671	1	.08	2	-.115	2	.159	2
609	P153	max	T	.547	1	.014	1	.267	1	1.53	2	.54	1
610		min		.125	2	-.003	2	.064	2	1.521	1	.127	2
611		max	B	.007	2	-.137	2	.281	1	-.071	1	.568	1
612		min		-.012	1	-.574	1	.072	2	-.132	2	.14	2
613	P154	max	T	.456	1	-.002	1	.229	1	1.493	1	.457	1
614		min		.107	2	-.008	2	.058	2	1.491	2	.112	2
615		max	B	.013	2	-.115	2	.242	1	-.103	1	.481	1
616		min		.005	1	-.478	1	.064	2	-.186	2	.122	2
617	P155	max	T	.569	1	.037	1	.266	1	1.541	2	.551	1
618		min		.133	2	-.001	2	.067	2	1.51	1	.133	2
619		max	B	.006	2	-.14	2	.278	1	-.091	1	.573	1
620		min		-.033	1	-.588	1	.073	2	-.153	2	.144	2
621	P156	max	T	.479	1	.014	1	.233	1	1.51	2	.472	1
622		min		.116	2	-.007	2	.062	2	1.484	1	.12	2
623		max	B	.014	2	-.12	2	.243	1	-.123	1	.491	1
624		min		-.008	1	-.495	1	.067	2	-.205	2	.127	2
625	P157	max	T	.355	1	-.015	2	.19	1	1.441	1	.368	1
626		min		.088	2	-.026	1	.051	2	1.429	2	.096	2
627		max	B	.03	1	-.092	2	.201	1	-.16	1	.389	1
628		min		.022	2	-.373	1	.057	2	-.268	2	.105	2
629	P158	max	T	.247	1	-.025	2	.154	1	1.344	1	.283	1
630		min		.067	2	-.061	1	.046	2	1.333	2	.082	2
631		max	B	.068	1	-.069	2	.165	1	-.262	1	.302	1
632		min		.035	2	-.262	1	.052	2	-.386	2	.092	2
633	P159	max	T	.38	1	-.016	2	.199	1	1.463	2	.389	1
634		min		.096	2	-.017	1	.056	2	1.44	1	.105	2
635		max	B	.025	2	-.098	2	.209	1	-.175	1	.406	1
636		min		.024	1	-.393	1	.061	2	-.275	2	.112	2
637	P160	max	T	.275	1	-.027	2	.167	1	1.395	2	.309	1
638		min		.075	2	-.06	1	.051	2	1.365	1	.092	2
639		max	B	.071	1	-.075	2	.178	1	-.259	1	.326	1
640		min		.04	2	-.285	1	.058	2	-.369	2	.101	2
641	P161	max	T	.142	1	-.041	2	.13	1	1.197	2	.226	1
642		min		.047	2	-.118	1	.044	2	1.171	1	.075	2
643		max	B	.13	1	-.048	2	.142	1	-.436	1	.247	1
644		min		.056	2	-.155	1	.052	2	-.533	2	.09	2
645	P162	max	T	.054	1	-.064	2	.135	1	1.042	2	.246	1
646		min		.029	2	-.215	1	.046	2	.942	1	.082	2
647		max	B	.233	1	-.03	2	.15	1	-.653	1	.273	1
648		min		.087	2	-.066	1	.058	2	-.678	2	.105	2
649	P163	max	T	.167	1	-.043	2	.144	1	1.301	2	.251	1
650		min		.053	2	-.121	1	.048	2	1.243	1	.084	2
651		max	B	.138	1	-.053	2	.157	1	-.387	1	.273	1
652		min		.062	2	-.177	1	.057	2	-.48	2	.099	2
653	P164	max	T	.065	1	-.065	2	.138	1	1.19	2	.25	1
654		min		.031	2	-.211	1	.048	2	1.077	1	.085	2
655		max	B	.237	1	-.031	2	.156	1	-.549	1	.282	1
656		min		.092	2	-.076	1	.062	2	-.591	2	.111	2
657	P165	max	T	.014	2	-.097	2	.174	1	.911	2	.354	1
658		min		-.012	1	-.36	1	.055	2	.763	1	.105	2

Envelope Plate/Shell Principal Stresses (Continued)

	Plate		Sur...	Sigma1 [ksi]	LC	Sigma2 [ksi]	LC	Tau Max [k...	LC	Angle [rad]	LC	Von Mises [ksi]	LC
659		max	B	.386	1	.002	1	.192	1	2.355	2	.385	1
660		min		.129	2	-.015	2	.072	2	2.321	1	.136	2
661	P166	max	T	0	2	-.14	2	.238	1	.825	2	.515	1
662		min		-.071	1	-.547	1	.07	2	.667	1	.14	2
663		max	B	.582	1	.062	1	.26	1	2.288	2	.554	1
664		min		.18	2	0	2	.09	2	2.23	1	.181	2
665	P167	max	T	.01	2	-.095	2	.156	1	1.08	2	.327	1
666		min		-.029	1	-.341	1	.052	2	.915	1	.1	2
667		max	B	.376	1	.018	1	.179	1	-.684	2	.368	1
668		min		.131	2	-.01	2	.071	2	-.695	1	.137	2
669	P168	max	T	-.013	2	-.134	2	.194	1	.994	2	.462	1
670		min		-.123	1	-.511	1	.06	2	.803	1	.128	2
671		max	B	.557	1	.112	1	.223	1	2.349	1	.511	1
672		min		.181	2	.013	2	.084	2	-.748	2	.175	2
673	P169	max	T	-.016	2	-.191	2	.317	1	.776	2	.712	1
674		min		-.138	1	-.771	1	.088	2	.621	1	.184	2
675		max	B	.817	1	.13	1	.343	1	2.25	2	.76	1
676		min		.242	2	.017	2	.113	2	2.186	1	.234	2
677	P170	max	T	-.041	2	-.248	2	.395	1	.746	2	.931	1
678		min		-.237	1	-1.027	1	.104	2	.592	1	.231	2
679		max	B	1.087	1	.232	1	.428	1	2.227	2	.992	1
680		min		.312	2	.044	2	.134	2	2.159	1	.293	2
681	P171	max	T	-.042	2	-.182	2	.245	1	.933	2	.639	1
682		min		-.235	1	-.724	1	.07	2	.737	1	.165	2
683		max	B	.783	1	.224	1	.279	1	2.352	2	.699	1
684		min		.242	2	.042	2	.1	2	2.291	1	.224	2
685	P172	max	T	-.082	2	-.241	2	.304	1	.873	2	.865	1
686		min		-.384	1	-.991	1	.079	2	.676	1	.212	2
687		max	B	1.066	1	.374	1	.346	1	2.31	2	.937	1
688		min		.317	2	.082	2	.118	2	2.239	1	.285	2
689	P173	max	T	-.082	2	-.305	2	.458	1	.704	2	1.16	1
690		min		-.39	1	-1.305	1	.111	2	.541	1	.273	2
691		max	B	1.383	1	.379	1	.502	1	2.186	2	1.238	1
692		min		.387	2	.082	2	.152	2	2.111	1	.353	2
693	P174	max	T	-.107	2	-.347	2	.591	1	.444	2	1.471	1
694		min		-.465	1	-1.647	1	.12	2	.368	1	.307	2
695		max	B	1.762	1	.449	1	.657	1	2.03	2	1.586	1
696		min		.477	2	.098	2	.189	2	1.96	1	.436	2
697	P175	max	T	-.154	2	-.323	2	.378	1	.747	2	1.2	1
698		min		-.627	1	-1.384	1	.084	2	.568	1	.279	2
699		max	B	1.482	1	.621	1	.431	1	2.237	2	1.289	1
700		min		.427	2	.153	2	.137	2	2.15	1	.374	2
701	P176	max	T	-.158	2	-.526	2	.797	1	.436	2	2.003	1
702		min		-.655	1	-2.249	1	.184	2	.387	1	.467	2
703		max	B	2.364	1	.639	1	.862	1	2.047	2	2.118	1
704		min		.655	2	.15	2	.253	2	1.981	1	.595	2
705	P177	max	T	-.064	2	-.431	2	.641	1	.541	2	1.476	1
706		min		-.33	1	-1.612	1	.184	2	.498	1	.403	2
707		max	B	1.587	1	.373	1	.607	1	2.091	2	1.437	1
708		min		.407	2	.101	2	.153	2	2.058	1	.367	2
709	P178	max	T	-.028	2	-.173	2	.247	1	1.06	1	.585	1
710		min		-.153	1	-.646	1	.072	2	1.025	2	.161	2
711		max	B	.673	1	.176	1	.249	1	-.337	2	.605	1
712		min		.202	2	.047	2	.078	2	-.444	1	.183	2
713	P179	max	T	-.043	2	-.281	2	.395	1	.648	2	.944	1
714		min		-.255	1	-1.046	1	.119	2	.6	1	.262	2
715		max	B	.993	1	.308	1	.343	1	2.325	2	.88	1

Envelope Plate/Shell Principal Stresses (Continued)

	Plate		Sur...	Sigma1 [ksi]	LC	Sigma2 [ksi]	LC	Tau Max [k...	LC	Angle [rad]	LC	Von Mises [ksi]	LC
716		min		.236	2	.083	2	.077	2	2.187	1	.208	2
717	P180	max	T	-.01	2	-.191	2	.32	1	1.108	1	.682	1
718		min		-.077	1	-.718	1	.091	2	1.08	2	.186	2
719		max	B	.78	1	.092	1	.344	1	-.33	2	.738	1
720		min		.251	2	.02	2	.116	2	-.406	1	.242	2
721	P181	max	T	.008	2	-.188	2	.39	1	2.069	2	.785	1
722		min		-.01	1	-.79	1	.098	2	2.027	1	.192	2
723		max	B	.912	1	.024	1	.444	1	.399	1	.9	1
724		min		.266	2	.003	2	.132	2	.354	2	.265	2
725	P182	max	T	-.021	2	-.28	2	.47	1	2.251	2	1.067	1
726		min		-.221	1	-1.16	1	.13	2	2.197	1	.27	2
727		max	B	1.287	1	.267	1	.51	1	.523	1	1.176	1
728		min		.363	2	.059	2	.152	2	.432	2	.338	2
729	P183	max	T	.011	2	-.194	2	.406	1	2.034	2	.808	1
730		min		.007	1	-.805	1	.103	2	1.998	1	.2	2
731		max	B	.925	1	.015	1	.455	1	.374	1	.917	1
732		min		.276	2	.005	2	.135	2	.322	2	.273	2
733	P184	max	T	.007	2	-.266	2	.522	1	2.23	2	1.069	1
734		min		-.048	1	-1.092	1	.137	2	2.193	1	.27	2
735		max	B	1.22	1	.097	1	.561	1	.554	1	1.174	1
736		min		.351	2	.029	2	.161	2	.475	2	.337	2
737	P185	max	T	-.091	2	-.33	2	.506	1	2.071	2	1.279	1
738		min		-.424	1	-1.437	1	.12	2	2.029	1	.296	2
739		max	B	1.706	1	.445	1	.63	1	.431	1	1.533	1
740		min		.504	2	.113	2	.195	2	.402	2	.458	2
741	P186	max	T	-.142	2	-.506	2	.757	1	2.051	2	1.887	1
742		min		-.602	1	-2.115	1	.182	2	2.042	1	.452	2
743		max	B	2.379	1	.627	1	.876	1	.457	1	2.136	1
744		min		.676	2	.167	2	.254	2	.42	2	.61	2
745	P187	max	T	-.065	2	-.295	2	.45	1	2.331	2	1.103	1
746		min		-.33	1	-1.23	1	.115	2	2.29	1	.269	2
747		max	B	1.392	1	.37	1	.511	1	.627	1	1.249	1
748		min		.403	2	.095	2	.154	2	.523	2	.365	2
749	P188	max	T	-.142	2	-.312	2	.349	1	-.748	2	1.141	1
750		min		-.617	1	-1.316	1	.085	2	-.785	1	.27	2
751		max	B	1.514	1	.641	1	.437	1	.681	1	1.316	1
752		min		.441	2	.156	2	.143	2	.568	2	.388	2
753	P189	max	T	-.237	2	-.608	2	.792	1	-.735	1	2.237	1
754		min		-.974	1	-2.559	1	.186	2	-.74	2	.531	2
755		max	B	2.841	1	.965	1	.938	1	.805	1	2.502	1
756		min		.777	2	.229	2	.274	2	.743	2	.692	2
757	P190	max	T	-.165	2	-.304	2	.311	1	-.586	1	1.129	1
758		min		-.681	1	-1.304	1	.069	2	-.633	2	.263	2
759		max	B	1.48	1	.66	1	.41	1	.941	1	1.284	1
760		min		.404	2	.15	2	.127	2	.837	2	.354	2
761	P191	max	T	-.163	2	-.289	2	.282	1	-.777	2	1.074	1
762		min		-.675	1	-1.239	1	.063	2	-.783	1	.251	2
763		max	B	1.451	1	.658	1	.397	1	.709	1	1.259	1
764		min		.425	2	.15	2	.137	2	.617	2	.373	2
765	P192	max	T	-.153	2	-.251	2	.227	1	-.66	1	.94	1
766		min		-.626	1	-1.081	1	.049	2	-.706	2	.22	2
767		max	B	1.267	1	.603	1	.332	1	.838	1	1.098	1
768		min		.365	2	.136	2	.115	2	.729	2	.32	2
769	P193	max	T	-.115	2	-.214	2	.196	1	2.265	2	.773	1
770		min		-.498	1	-.89	1	.049	2	-.768	1	.185	2
771		max	B	1.034	1	.474	1	.28	1	.815	1	.897	1
772		min		.294	2	.098	2	.098	2	.723	2	.26	2

Envelope Plate/Shell Principal Stresses (Continued)

	Plate		Sur...	Sigma1 [ksi]	LC	Sigma2 [ksi]	LC	Tau Max [k...	LC	Angle [rad]	LC	Von Mises [ksi]	LC
773	P194	max	T	-.066	2	-.159	2	.162	1	2.255	1	.548	1
774		min		-.308	1	-.632	1	.046	2	2.158	2	.138	2
775		max	B	.745	1	.285	1	.23	1	.741	1	.651	1
776		min		.221	2	.049	2	.086	2	.675	2	.201	2
777	P195	max	T	-.115	2	-.168	2	.119	1	2.285	2	.629	1
778		min		-.476	1	-.713	1	.027	2	-.686	1	.148	2
779		max	B	.866	1	.445	1	.21	1	.834	1	.75	1
780		min		.258	2	.094	2	.082	2	.708	2	.226	2
781	P196	max	T	-.071	2	-.125	2	.089	1	2.214	1	.436	1
782		min		-.319	1	-.497	1	.027	2	2.034	2	.109	2
783		max	B	.624	1	.289	1	.168	1	.722	1	.541	1
784		min		.196	2	.052	2	.072	2	.641	2	.176	2
785	P197	max	T	-.031	2	-.117	2	.142	1	2.138	1	.388	1
786		min		-.16	1	-.443	1	.043	2	2.077	2	.105	2
787		max	B	.53	1	.14	1	.195	1	.659	1	.476	1
788		min		.166	2	.014	2	.076	2	.627	2	.159	2
789	P198	max	T	-.002	2	-.084	2	.132	1	2.002	1	.281	1
790		min		-.03	1	-.295	1	.041	2	1.993	2	.083	2
791		max	B	.36	1	.016	1	.172	1	.567	2	.352	1
792		min		.121	2	-.015	2	.068	2	.553	1	.129	2
793	P199	max	T	-.032	2	-.093	2	.09	1	2.009	1	.296	1
794		min		-.162	1	-.342	1	.03	2	1.916	2	.082	2
795		max	B	.439	1	.141	1	.149	1	.611	1	.388	1
796		min		.148	2	.016	2	.066	2	.586	2	.14	2
797	P200	max	T	0	2	-.067	2	.103	1	1.858	1	.215	1
798		min		-.018	1	-.224	1	.034	2	1.837	2	.067	2
799		max	B	.294	1	.008	1	.143	1	.525	2	.29	1
800		min		.109	2	-.015	2	.062	2	.49	1	.117	2
801	P201	max	T	.092	1	-.058	2	.138	1	1.902	2	.244	1
802		min		.024	2	-.185	1	.041	2	1.863	1	.073	2
803		max	B	.23	1	-.04	2	.165	1	.489	2	.293	1
804		min		.086	2	-.1	1	.063	2	.423	1	.111	2
805	P202	max	T	.212	1	-.038	2	.157	1	1.818	2	.278	1
806		min		.048	2	-.103	1	.043	2	1.754	1	.075	2
807		max	B	.133	1	-.064	2	.175	1	.402	2	.306	1
808		min		.059	2	-.217	1	.061	2	.299	1	.106	2
809	P203	max	T	.115	1	-.045	2	.123	1	1.774	2	.213	1
810		min		.029	2	-.131	1	.037	2	1.753	1	.065	2
811		max	B	.179	1	-.042	2	.149	1	.455	2	.26	1
812		min		.077	2	-.118	1	.06	2	.37	1	.105	2
813	P204	max	T	.24	1	-.027	2	.148	1	1.722	2	.272	1
814		min		.055	2	-.057	1	.041	2	1.685	1	.073	2
815		max	B	.091	1	-.067	2	.165	1	.38	2	.295	1
816		min		.052	2	-.239	1	.06	2	.267	1	.103	2
817	P205	max	T	.327	1	-.022	2	.184	1	1.75	2	.35	1
818		min		.071	2	-.042	1	.047	2	1.681	1	.084	2
819		max	B	.063	1	-.087	2	.197	1	.318	2	.367	1
820		min		.038	2	-.332	1	.062	2	.203	1	.111	2
821	P206	max	T	.434	1	.005	1	.215	1	1.699	2	.432	1
822		min		.092	2	-.01	2	.051	2	1.636	1	.098	2
823		max	B	.022	2	-.109	2	.226	1	.245	2	.447	1
824		min		.011	1	-.442	1	.066	2	.137	1	.122	2
825	P207	max	T	.356	1	.003	1	.177	1	1.683	2	.355	1
826		min		.079	2	-.013	2	.046	2	1.641	1	.086	2
827		max	B	.032	2	-.091	2	.189	1	.308	2	.367	1
828		min		.023	1	-.356	1	.061	2	.19	1	.111	2
829	P208	max	T	.463	1	.051	1	.206	1	1.655	2	.44	1

Envelope Plate/Shell Principal Stresses (Continued)

	Plate		Sur...	Sigma1 [ksi]	LC	Sigma2 [ksi]	LC	Tau Max [k...	LC	Angle [rad]	LC	Von Mises [ksi]	LC
830		min		.101	2	0	2	.051	2	1.614	1	.101	2
831		max	B	.016	2	-.114	2	.217	1	.245	2	.451	1
832		min		-.031	1	-.465	1	.065	2	.136	1	.123	2
833	P209	max	T	.532	1	.041	1	.246	1	1.664	2	.513	1
834		min		.112	2	0	2	.056	2	1.608	1	.112	2
835		max	B	.011	2	-.131	2	.258	1	.186	2	.53	1
836		min		-.028	1	-.544	1	.071	2	.092	1	.136	2
837	P210	max	T	.62	1	.07	1	.275	1	1.641	2	.589	1
838		min		.13	2	.007	2	.062	2	1.59	1	.127	2
839		max	B	.002	2	-.15	2	.289	1	.14	2	.608	1
840		min		-.058	1	-.635	1	.076	2	.062	1	.151	2
841	P211	max	T	.561	1	.09	1	.235	1	1.635	2	.522	1
842		min		.121	2	.009	2	.056	2	1.596	1	.116	2
843		max	B	.004	2	-.135	2	.247	1	.192	2	.534	1
844		min		-.072	1	-.566	1	.069	2	.097	1	.137	2
845	P212	max	T	.649	1	.122	1	.263	1	1.622	2	.597	1
846		min		.139	2	.018	2	.06	2	1.584	1	.131	2
847		max	B	-.005	2	-.154	2	.276	1	.148	2	.612	1
848		min		-.106	1	-.658	1	.074	2	.068	1	.151	2
849	P213	max	T	.697	1	.092	1	.302	1	1.626	2	.656	1
850		min		.146	2	.013	2	.066	2	1.578	1	.14	2
851		max	B	-.005	2	-.167	2	.317	1	.104	2	.679	1
852		min		-.081	1	-.716	1	.081	2	.04	1	.164	2
853	P214	max	T	.762	1	.11	1	.326	1	1.616	2	.713	1
854		min		.159	2	.017	2	.071	2	1.57	1	.151	2
855		max	B	-.01	2	-.181	2	.342	1	.075	2	.739	1
856		min		-.099	1	-.784	1	.086	2	.024	1	.177	2
857	P215	max	T	.725	1	.148	1	.289	1	1.615	2	.664	1
858		min		.154	2	.024	2	.065	2	1.576	1	.144	2
859		max	B	-.013	2	-.17	2	.303	1	.112	2	.682	1
860		min		-.132	1	-.738	1	.079	2	.047	1	.164	2
861	P216	max	T	.79	1	.168	1	.311	1	1.61	2	.721	1
862		min		.167	2	.03	2	.069	2	1.569	1	.155	2
863		max	B	-.018	2	-.185	2	.327	1	.082	2	.742	1
864		min		-.153	1	-.806	1	.083	2	.03	1	.176	2
865	P217	max	T	.814	1	.123	1	.345	1	1.611	2	.76	1
866		min		.17	2	.021	2	.075	2	1.564	1	.161	2
867		max	B	-.013	2	-.193	2	.363	1	.051	2	.788	1
868		min		-.113	1	-.839	1	.09	2	.011	1	.187	2
869	P218	max	T	.852	1	.133	1	.36	1	1.608	2	.794	1
870		min		.179	2	.024	2	.078	2	1.56	1	.168	2
871		max	B	-.016	2	-.202	2	.378	1	.031	2	.825	1
872		min		-.123	1	-.879	1	.093	2	0	1	.194	2
873	P219	max	T	.843	1	.184	1	.329	1	1.608	2	.767	1
874		min		.179	2	.034	2	.072	2	1.564	1	.164	2
875		max	B	-.022	2	-.196	2	.346	1	.056	2	.79	1
876		min		-.168	1	-.861	1	.087	2	.015	1	.186	2
877	P220	max	T	.882	1	.196	1	.343	1	1.608	2	.802	1
878		min		.187	2	.037	2	.075	2	1.559	1	.172	2
879		max	B	-.025	2	-.205	2	.361	1	.034	2	.826	1
880		min		-.18	1	-.902	1	.09	2	.002	1	.193	2
881	P221	max	T	.878	1	.14	1	.369	1	1.606	2	.817	1
882		min		.185	2	.025	2	.08	2	1.556	1	.174	2
883		max	B	-.018	2	-.208	2	.388	1	.013	2	.848	1
884		min		-.129	1	-.906	1	.095	2	-.01	1	.199	2
885	P222	max	T	.889	1	.143	1	.373	1	1.605	2	.827	1
886		min		.189	2	.026	2	.082	2	1.552	1	.177	2

Envelope Plate/Shell Principal Stresses (Continued)

	Plate		Sur...	Sigma1 [ksi]	LC	Sigma2 [ksi]	LC	Tau Max [k...	LC	Angle [rad]	LC	Von Mises [ksi]	LC
887		max	B	-.019	2	-.21	2	.392	1	-.004	2	.858	1
888		min		-.133	1	-.917	1	.096	2	-.019	1	.202	2
889	P223	max	T	.907	1	.203	1	.352	1	1.609	2	.824	1
890		min		.193	2	.038	2	.078	2	1.554	1	.177	2
891		max	B	-.028	2	-.211	2	.37	1	.013	2	.85	1
892		min		-.188	1	-.928	1	.092	2	-.01	1	.198	2
893	P224	max	T	.918	1	.207	1	.355	1	1.61	2	.834	1
894		min		.197	2	.039	2	.079	2	1.55	1	.181	2
895		max	B	-.029	2	-.213	2	.373	1	-.006	2	.859	1
896		min		-.192	1	-.939	1	.092	2	-.022	1	.201	2
897	P225	max	T	.886	1	.143	1	.371	1	1.604	2	.823	1
898		min		.19	2	.025	2	.082	2	1.549	1	.179	2
899		max	B	-.019	2	-.21	2	.39	1	-.021	2	.855	1
900		min		-.134	1	-.914	1	.096	2	-.028	1	.201	2
901	P226	max	T	.869	1	.14	1	.364	1	1.602	2	.808	1
902		min		.189	2	.024	2	.082	2	1.545	1	.178	2
903		max	B	-.018	2	-.206	2	.382	1	-.037	1	.838	1
904		min		-.131	1	-.895	1	.094	2	-.038	2	.198	2
905	P227	max	T	.914	1	.207	1	.353	1	1.61	2	.83	1
906		min		.198	2	.039	2	.08	2	1.545	1	.182	2
907		max	B	-.029	2	-.213	2	.371	1	-.025	2	.855	1
908		min		-.193	1	-.935	1	.092	2	-.033	1	.2	2
909	P228	max	T	.897	1	.204	1	.346	1	1.61	2	.814	1
910		min		.197	2	.037	2	.08	2	1.54	1	.181	2
911		max	B	-.028	2	-.21	2	.363	1	-.044	1	.838	1
912		min		-.191	1	-.917	1	.091	2	-.044	2	.197	2
913	P229	max	T	.838	1	.135	1	.352	1	1.599	2	.779	1
914		min		.184	2	.022	2	.081	2	1.54	1	.174	2
915		max	B	-.016	2	-.2	2	.368	1	-.046	1	.807	1
916		min		-.126	1	-.863	1	.092	2	-.056	2	.192	2
917	P230	max	T	.794	1	.126	1	.334	1	1.594	2	.74	1
918		min		.178	2	.02	2	.079	2	1.535	1	.169	2
919		max	B	-.014	2	-.19	2	.35	1	-.056	1	.765	1
920		min		-.118	1	-.817	1	.088	2	-.076	2	.184	2
921	P231	max	T	.865	1	.197	1	.334	1	1.609	2	.786	1
922		min		.193	2	.035	2	.079	2	1.535	1	.178	2
923		max	B	-.026	2	-.203	2	.35	1	-.055	1	.808	1
924		min		-.184	1	-.884	1	.089	2	-.065	2	.192	2
925	P232	max	T	.821	1	.185	1	.318	1	1.606	2	.745	1
926		min		.186	2	.031	2	.077	2	1.53	1	.172	2
927		max	B	-.023	2	-.194	2	.331	1	-.067	1	.765	1
928		min		-.174	1	-.837	1	.086	2	-.087	2	.184	2
929	P233	max	T	.738	1	.113	1	.313	1	1.587	2	.689	1
930		min		.168	2	.016	2	.076	2	1.528	1	.161	2
931		max	B	-.01	2	-.178	2	.326	1	-.069	1	.711	1
932		min		-.106	1	-.758	1	.084	2	-.1	2	.173	2
933	P234	max	T	.67	1	.096	1	.287	1	1.576	2	.628	1
934		min		.156	2	.011	2	.072	2	1.519	1	.151	2
935		max	B	-.005	2	-.162	2	.299	1	-.084	1	.647	1
936		min		-.089	1	-.687	1	.079	2	-.13	2	.16	2
937	P235	max	T	.764	1	.17	1	.297	1	1.601	2	.694	1
938		min		.176	2	.027	2	.075	2	1.523	1	.165	2
939		max	B	-.019	2	-.182	2	.309	1	-.08	1	.711	1
940		min		-.16	1	-.778	1	.082	2	-.112	2	.173	2
941	P236	max	T	.695	1	.15	1	.272	1	1.593	2	.633	1
942		min		.164	2	.021	2	.071	2	1.515	1	.155	2
943		max	B	-.013	2	-.167	2	.283	1	-.096	1	.648	1

Envelope Plate/Shell Principal Stresses (Continued)

	Plate		Sur...	Sigma1 [ksi]	LC	Sigma2 [ksi]	LC	Tau Max [k...	LC	Angle [rad]	LC	Von Mises [ksi]	LC
944		min		-.14	1	-.706	1	.077	2	-.141	2	.161	2
945	P237	max	T	.592	1	.074	1	.259	1	1.559	2	.558	1
946		min		.141	2	.005	2	.068	2	1.505	1	.139	2
947		max	B	.002	2	-.145	2	.269	1	-.105	1	.575	1
948		min		-.067	1	-.605	1	.073	2	-.167	2	.146	2
949	P238	max	T	.503	1	.046	1	.229	1	1.536	2	.482	1
950		min		.124	2	-.003	2	.063	2	1.483	1	.125	2
951		max	B	.011	2	-.125	2	.238	1	-.135	1	.496	1
952		min		-.038	1	-.513	1	.068	2	-.214	2	.131	2
953	P239	max	T	.616	1	.125	1	.245	1	1.582	2	.564	1
954		min		.15	2	.015	2	.068	2	1.503	1	.143	2
955		max	B	-.005	2	-.15	2	.255	1	-.117	1	.575	1
956		min		-.115	1	-.624	1	.072	2	-.177	2	.147	2
957	P240	max	T	.527	1	.094	1	.217	1	1.566	2	.487	1
958		min		.133	2	.006	2	.063	2	1.487	1	.13	2
959		max	B	.004	2	-.13	2	.225	1	-.144	1	.496	1
960		min		-.083	1	-.533	1	.067	2	-.221	2	.133	2
961	P241	max	T	.405	1	.01	1	.198	1	1.502	2	.401	1
962		min		.105	2	-.012	2	.058	2	1.449	1	.111	2
963		max	B	.023	2	-.103	2	.207	1	-.18	1	.413	1
964		min		0	1	-.413	1	.063	2	-.275	2	.117	2
965	P242	max	T	.3	1	-.024	2	.169	1	1.456	2	.32	1
966		min		.083	2	-.037	1	.054	2	1.393	1	.098	2
967		max	B	.05	1	-.081	2	.178	1	-.248	1	.334	1
968		min		.039	2	-.306	1	.06	2	-.351	2	.106	2
969	P243	max	T	.429	1	.056	1	.187	1	1.544	2	.405	1
970		min		.113	2	-.004	2	.058	2	1.462	1	.115	2
971		max	B	.017	2	-.109	2	.195	1	-.183	1	.413	1
972		min		-.043	1	-.433	1	.063	2	-.275	2	.118	2
973	P244	max	T	.324	1	.008	1	.158	1	1.515	2	.32	1
974		min		.091	2	-.016	2	.053	2	1.424	1	.1	2
975		max	B	.033	2	-.086	2	.167	1	-.239	1	.331	1
976		min		.008	1	-.327	1	.06	2	-.339	2	.107	2
977	P245	max	T	.19	1	-.04	2	.144	1	1.394	2	.254	1
978		min		.06	2	-.098	1	.05	2	1.307	1	.087	2
979		max	B	.118	1	-.057	2	.157	1	-.347	1	.275	1
980		min		.061	2	-.196	1	.059	2	-.439	2	.102	2
981	P246	max	T	.078	1	-.06	2	.13	1	1.318	2	.231	1
982		min		.035	2	-.181	1	.048	2	1.183	1	.083	2
983		max	B	.211	1	-.033	2	.149	1	-.474	1	.265	1
984		min		.089	2	-.086	1	.061	2	-.528	2	.11	2
985	P247	max	T	.212	1	-.03	2	.132	1	1.477	2	.242	1
986		min		.067	2	-.051	1	.049	2	1.363	1	.087	2
987		max	B	.074	1	-.062	2	.144	1	-.32	1	.26	1
988		min		.053	2	-.215	1	.058	2	-.412	2	.1	2
989	P248	max	T	.094	1	-.049	2	.11	1	1.431	2	.191	1
990		min		.041	2	-.126	1	.045	2	1.27	1	.077	2
991		max	B	.159	1	-.037	2	.129	1	-.429	1	.226	1
992		min		.079	2	-.1	1	.058	2	-.488	2	.102	2
993	P249	max	T	.009	2	-.086	2	.13	1	1.235	2	.278	1
994		min		-.035	1	-.294	1	.047	2	1.04	1	.091	2
995		max	B	.336	1	.024	1	.156	1	-.605	1	.325	1
996		min		.125	2	-.008	2	.067	2	-.607	2	.129	2
997	P250	max	T	-.021	2	-.12	2	.144	1	1.158	2	.389	1
998		min		-.154	1	-.442	1	.049	2	.914	1	.11	2
999		max	B	.497	1	.14	1	.178	1	-.668	2	.444	1
1000		min		.17	2	.021	2	.075	2	-.709	1	.161	2

Envelope Plate/Shell Principal Stresses (Continued)

	Plate		Sur...	Sigma1 [ksi]	LC	Sigma2 [ksi]	LC	Tau Max [k...	LC	Angle [rad]	LC	Von Mises [ksi]	LC
1001	P251	max	T	.011	2	-.071	2	.096	1	1.377	2	.208	1
1002		min		-.03	1	-.221	1	.041	2	1.136	1	.077	2
1003		max	B	.268	1	.018	1	.125	1	-.557	1	.259	1
1004		min		.111	2	-.01	2	.06	2	-.559	2	.116	2
1005	P252	max	T	-.023	2	-.098	2	.093	1	1.315	2	.298	1
1006		min		-.159	1	-.344	1	.038	2	.971	1	.089	2
1007		max	B	.406	1	.143	1	.132	1	-.621	2	.357	1
1008		min		.15	2	.021	2	.064	2	-.682	1	.141	2
1009	P253	max	T	-.058	2	-.161	2	.17	1	1.086	2	.546	1
1010		min		-.291	1	-.63	1	.051	2	.813	1	.141	2
1011		max	B	.7	1	.277	1	.212	1	2.354	1	.611	1
1012		min		.226	2	.056	2	.085	2	-.716	2	.204	2
1013	P254	max	T	-.11	2	-.216	2	.209	1	.991	2	.766	1
1014		min		-.467	1	-.884	1	.053	2	.716	1	.187	2
1015		max	B	.973	1	.453	1	.26	1	2.283	1	.843	1
1016		min		.302	2	.104	2	.099	2	-.765	2	.265	2
1017	P255	max	T	-.064	2	-.13	2	.103	1	1.229	2	.439	1
1018		min		-.298	1	-.504	1	.033	2	.795	1	.113	2
1019		max	B	.582	1	.279	1	.151	1	2.347	1	.504	1
1020		min		.199	2	.058	2	.071	2	-.678	2	.177	2
1021	P256	max	T	-.112	2	-.171	2	.141	1	1.026	2	.629	1
1022		min		-.438	1	-.721	1	.029	2	.629	1	.151	2
1023		max	B	.811	1	.422	1	.195	1	2.242	1	.703	1
1024		min		.262	2	.099	2	.081	2	-.744	2	.229	2
1025	P257	max	T	-.168	2	-.301	2	.328	1	.725	2	1.117	1
1026		min		-.634	1	-1.29	1	.066	2	.569	1	.261	2
1027		max	B	1.397	1	.623	1	.387	1	2.269	2	1.212	1
1028		min		.415	2	.155	2	.13	2	2.167	1	.363	2
1029	P258	max	T	-.242	2	-.618	2	.787	1	.791	2	2.179	1
1030		min		-.914	1	-2.487	1	.188	2	.725	1	.54	2
1031		max	B	2.657	1	.91	1	.873	1	2.314	1	2.339	1
1032		min		.788	2	.236	2	.276	2	-.769	2	.701	2
1033	P259	max	T	-.157	2	-.256	2	.247	1	.812	2	.93	1
1034		min		-.578	1	-1.073	1	.05	2	.638	1	.223	2
1035		max	B	1.183	1	.567	1	.308	1	2.257	1	1.025	1
1036		min		.369	2	.141	2	.114	2	-.757	2	.322	2
1037	P260	max	T	-.169	2	-.302	2	.294	1	.877	2	1.051	1
1038		min		-.626	1	-1.214	1	.067	2	.763	1	.262	2
1039		max	B	1.338	1	.619	1	.36	1	-.646	2	1.16	1
1040		min		.423	2	.156	2	.134	2	-.755	1	.371	2
1041	P261	max	T	-.159	2	-.533	2	.733	1	1.139	2	1.809	1
1042		min		-.557	1	-2.022	1	.187	2	1.086	1	.474	2
1043		max	B	2.179	1	.57	1	.805	1	-.445	2	1.958	1
1044		min		.675	2	.161	2	.257	2	-.476	1	.611	2
1045	P262	max	T	-.106	2	-.356	2	.487	1	1.131	2	1.217	1
1046		min		-.391	1	-1.365	1	.125	2	1.096	1	.317	2
1047		max	B	1.525	1	.402	1	.561	1	-.428	2	1.369	1
1048		min		.501	2	.107	2	.197	2	-.456	1	.457	2
1049	P263	max	T	-.154	2	-.325	2	.353	1	.845	2	1.108	1
1050		min		-.572	1	-1.277	1	.085	2	.77	1	.281	2
1051		max	B	1.391	1	.589	1	.401	1	-.608	2	1.209	1
1052		min		.438	2	.157	2	.141	2	-.734	1	.385	2
1053	P264	max	T	-.082	2	-.308	2	.442	1	.883	2	1.065	1
1054		min		-.297	1	-1.182	1	.113	2	.837	1	.276	2
1055		max	B	1.276	1	.324	1	.476	1	-.561	2	1.149	1
1056		min		.4	2	.09	2	.155	2	-.676	1	.364	2
1057	P265	max	T	-.041	2	-.291	2	.446	1	.943	2	1.01	1

Envelope Plate/Shell Principal Stresses (Continued)

	Plate		Sur...	Sigma1 [ksi]	LC	Sigma2 [ksi]	LC	Tau Max [k...	LC	Angle [rad]	LC	Von Mises [ksi]	LC
1058		min		-.206	1	-1.097	1	.125	2	.931	1	.273	2
1059		max	B	1.169	1	.234	1	.468	1	-.464	2	1.072	1
1060		min		.364	2	.049	2	.157	2	-.573	1	.342	2
1061	P266	max	T	.003	2	-.201	2	.363	1	1.108	2	.73	1
1062		min		-.01	1	-.735	1	.102	2	1.103	1	.202	2
1063		max	B	.807	1	.018	1	.394	1	-.368	2	.798	1
1064		min		.268	2	0	2	.134	2	-.429	1	.267	2
1065	P267	max	T	-.007	2	-.279	2	.502	1	.965	2	1.021	1
1066		min		-.034	1	-1.038	1	.136	2	.931	1	.275	2
1067		max	B	1.111	1	.065	1	.523	1	-.505	2	1.08	1
1068		min		.349	2	.023	2	.163	2	-.596	1	.338	2
1069	P268	max	T	.011	1	-.211	2	.378	1	1.156	2	.751	1
1070		min		.005	2	-.745	1	.108	2	1.124	1	.214	2
1071		max	B	.814	1	.002	1	.406	1	-.342	2	.813	1
1072		min		.272	2	.002	2	.135	2	-.412	1	.271	2
1073	P269	max	T	.021	1	-.169	2	.364	1	2.006	2	.719	1
1074		min		.011	2	-.708	1	.09	2	1.97	1	.175	2
1075		max	B	.824	1	0	2	.414	1	.342	1	.826	1
1076		min		.254	2	-.004	1	.127	2	.282	2	.253	2
1077	P270	max	T	.015	2	-.225	2	.46	1	2.228	2	.921	1
1078		min		0	1	-.921	1	.12	2	2.193	1	.233	2
1079		max	B	1.039	1	.035	1	.502	1	.552	1	1.022	1
1080		min		.307	2	.011	2	.148	2	.471	2	.301	2
1081	P271	max	T	.018	1	-.126	2	.279	1	2.019	2	.549	1
1082		min		.01	2	-.54	1	.068	2	1.965	1	.132	2
1083		max	B	.653	1	0	2	.329	1	.328	1	.655	1
1084		min		.211	2	-.005	1	.106	2	.268	2	.211	2
1085	P272	max	T	.024	1	-.172	2	.363	1	2.246	2	.714	1
1086		min		.019	2	-.702	1	.095	2	2.205	1	.182	2
1087		max	B	.81	1	.004	1	.403	1	.556	1	.807	1
1088		min		.249	2	.002	2	.123	2	.471	2	.248	2
1089	P273	max	T	-.028	2	-.238	2	.403	1	2.337	1	.906	1
1090		min		-.175	1	-.981	1	.105	2	-.77	2	.225	2
1091		max	B	1.112	1	.213	1	.449	1	.672	1	1.022	1
1092		min		.327	2	.054	2	.136	2	.563	2	.303	2
1093	P274	max	T	-.071	2	-.233	2	.32	1	-.634	2	.856	1
1094		min		-.333	1	-.972	1	.081	2	-.669	1	.206	2
1095		max	B	1.114	1	.362	1	.376	1	.776	1	.984	1
1096		min		.329	2	.088	2	.12	2	.638	2	.294	2
1097	P275	max	T	-.005	2	-.18	2	.331	1	-.736	2	.702	1
1098		min		-.076	1	-.737	1	.087	2	-.767	1	.178	2
1099		max	B	.847	1	.108	1	.369	1	.701	1	.798	1
1100		min		.257	2	.027	2	.115	2	.584	2	.245	2
1101	P276	max	T	-.031	2	-.174	2	.277	1	-.577	2	.655	1
1102		min		-.169	1	-.723	1	.071	2	-.599	1	.161	2
1103		max	B	.833	1	.202	1	.315	1	.834	1	.752	1
1104		min		.252	2	.05	2	.101	2	.676	2	.231	2
1105	P277	max	T	-.102	2	-.209	2	.23	1	-.51	2	.772	1
1106		min		-.433	1	-.892	1	.054	2	-.538	1	.181	2
1107		max	B	1.038	1	.449	1	.295	1	.867	1	.902	1
1108		min		.308	2	.106	2	.101	2	.699	2	.271	2
1109	P278	max	T	-.108	2	-.167	2	.146	1	-.466	1	.634	1
1110		min		-.435	1	-.727	1	.03	2	-.474	2	.146	2
1111		max	B	.873	1	.431	1	.221	1	.901	1	.756	1
1112		min		.264	2	.097	2	.084	2	.718	2	.232	2
1113	P279	max	T	-.05	2	-.155	2	.217	1	-.427	2	.579	1
1114		min		-.224	1	-.658	1	.053	2	-.442	1	.137	2

Envelope Plate/Shell Principal Stresses (Continued)

	Plate		Sur...	Sigma1 [ksi]	LC	Sigma2 [ksi]	LC	Tau Max [k...	LC	Angle [rad]	LC	Von Mises [ksi]	LC
1115		max	B	.766	1	.254	1	.256	1	.944	1	.675	1
1116		min		.233	2	.061	2	.086	2	.742	2	.209	2
1117	P280	max	T	-.058	2	-.126	2	.157	1	-.289	2	.478	1
1118		min		-.235	1	-.55	1	.034	2	-.301	1	.109	2
1119		max	B	.652	1	.258	1	.197	1	1.02	1	.568	1
1120		min		.203	2	.06	2	.071	2	.772	2	.18	2
1121	P281	max	T	-.095	2	-.123	2	.086	1	-.449	1	.482	1
1122		min		-.372	1	-.545	1	.014	2	-.598	2	.112	2
1123		max	B	.684	1	.353	1	.166	1	.898	1	.592	1
1124		min		.214	2	.074	2	.07	2	.711	2	.188	2
1125	P282	max	T	-.065	2	-.085	2	.037	1	1.963	2	.319	1
1126		min		-.276	1	-.349	1	.01	2	-.651	1	.077	2
1127		max	B	.482	1	.24	1	.121	1	.804	1	.417	1
1128		min		.163	2	.043	2	.06	2	.654	2	.146	2
1129	P283	max	T	-.055	2	-.09	2	.101	1	-.166	2	.353	1
1130		min		-.206	1	-.407	1	.017	2	-.183	1	.078	2
1131		max	B	.504	1	.219	1	.143	1	1.039	1	.438	1
1132		min		.166	2	.047	2	.059	2	.755	2	.148	2
1133	P284	max	T	-.046	2	-.053	2	.052	1	.073	2	.222	1
1134		min		-.152	1	-.255	1	.004	2	-.072	1	.05	2
1135		max	B	.352	1	.15	1	.101	1	.978	1	.306	1
1136		min		.129	2	.025	2	.052	2	.701	2	.118	2
1137	P285	max	T	-.027	2	-.064	2	.038	1	1.898	1	.193	1
1138		min		-.142	1	-.219	1	.018	2	1.734	2	.055	2
1139		max	B	.326	1	.115	1	.106	1	.639	1	.287	1
1140		min		.123	2	.011	2	.056	2	.583	2	.118	2
1141	P286	max	T	.007	2	-.044	2	.067	1	1.704	1	.132	1
1142		min		.005	1	-.129	1	.025	2	1.678	2	.048	2
1143		max	B	.203	1	-.014	1	.108	1	.514	2	.21	1
1144		min		.09	2	-.019	2	.054	2	.476	1	.101	2
1145	P287	max	T	-.017	2	-.033	2	.01	1	1.395	2	.097	1
1146		min		-.085	1	-.106	1	.008	2	.303	1	.028	2
1147		max	B	.21	1	.06	1	.075	1	.801	1	.188	1
1148		min		.096	2	0	2	.048	2	.622	2	.096	2
1149	P288	max	T	.041	1	-.019	2	.032	1	1.481	2	.056	1
1150		min		.016	2	-.023	1	.017	2	1.413	1	.03	2
1151		max	B	.098	1	-.027	2	.073	1	.552	1	.129	1
1152		min		.068	2	-.048	1	.047	2	.538	2	.084	2
1153	P289	max	T	.142	1	-.027	2	.097	1	1.65	2	.175	1
1154		min		.036	2	-.053	1	.032	2	1.642	1	.055	2
1155		max	B	.104	1	-.046	2	.122	1	.443	2	.213	1
1156		min		.063	2	-.14	1	.054	2	.345	1	.095	2
1157	P290	max	T	.268	1	.012	1	.128	1	1.632	2	.262	1
1158		min		.063	2	-.011	2	.037	2	1.612	1	.07	2
1159		max	B	.04	2	-.072	2	.144	1	.373	2	.277	1
1160		min		.026	1	-.263	1	.056	2	.249	1	.098	2
1161	P291	max	T	.174	1	.04	1	.067	1	1.517	2	.157	1
1162		min		.045	2	-.005	2	.025	2	1.494	1	.048	2
1163		max	B	.044	2	-.053	2	.09	1	.457	2	.174	1
1164		min		.012	1	-.168	1	.048	2	.362	1	.084	2
1165	P292	max	T	.298	1	.098	1	.1	1	1.536	2	.263	1
1166		min		.072	2	.009	2	.031	2	1.525	1	.068	2
1167		max	B	.023	2	-.078	2	.115	1	.384	2	.264	1
1168		min		-.058	1	-.289	1	.05	2	.25	1	.092	2
1169	P293	max	T	.385	1	.068	1	.158	1	1.618	2	.355	1
1170		min		.087	2	.002	2	.043	2	1.596	1	.086	2
1171		max	B	.021	2	-.096	2	.171	1	.307	2	.362	1

Envelope Plate/Shell Principal Stresses (Continued)

	Plate		Sur...	Sigma1 [ksi]	LC	Sigma2 [ksi]	LC	Tau Max [k...	LC	Angle [rad]	LC	Von Mises [ksi]	LC
1172		min		-.038	1	-.38	1	.059	2	.181	1	.108	2
1173	P294	max	T	.492	1	.116	1	.188	1	1.609	2	.446	1
1174		min		.109	2	.014	2	.048	2	1.586	1	.103	2
1175		max	B	.006	2	-.118	2	.2	1	.248	2	.451	1
1176		min		-.09	1	-.49	1	.062	2	.134	1	.122	2
1177	P295	max	T	.413	1	.15	1	.132	1	1.549	2	.362	1
1178		min		.096	2	.021	2	.038	2	1.541	1	.087	2
1179		max	B	.006	2	-.102	2	.144	1	.316	2	.361	1
1180		min		-.117	1	-.405	1	.054	2	.181	1	.105	2
1181	P296	max	T	.521	1	.197	1	.162	1	1.558	2	.456	1
1182		min		.118	2	.032	2	.043	2	1.551	1	.106	2
1183		max	B	-.008	2	-.124	2	.174	1	.257	2	.456	1
1184		min		-.167	1	-.515	1	.058	2	.136	1	.12	2
1185	P297	max	T	.59	1	.156	1	.217	1	1.603	2	.53	1
1186		min		.129	2	.024	2	.053	2	1.579	1	.119	2
1187		max	B	-.006	2	-.139	2	.229	1	.197	2	.537	1
1188		min		-.133	1	-.591	1	.067	2	.099	1	.136	2
1189	P298	max	T	.678	1	.19	1	.244	1	1.6	2	.606	1
1190		min		.147	2	.032	2	.057	2	1.574	1	.134	2
1191		max	B	-.016	2	-.158	2	.257	1	.155	2	.616	1
1192		min		-.168	1	-.683	1	.071	2	.073	1	.151	2
1193	P299	max	T	.62	1	.238	1	.191	1	1.565	2	.542	1
1194		min		.138	2	.042	2	.048	2	1.556	1	.122	2
1195		max	B	-.02	2	-.145	2	.204	1	.206	2	.544	1
1196		min		-.209	1	-.618	1	.063	2	.103	1	.136	2
1197	P300	max	T	.71	1	.273	1	.218	1	1.572	2	.62	1
1198		min		.155	2	.05	2	.053	2	1.559	1	.137	2
1199		max	B	-.029	2	-.164	2	.233	1	.163	2	.625	1
1200		min		-.245	1	-.71	1	.067	2	.077	1	.151	2
1201	P301	max	T	.756	1	.218	1	.269	1	1.599	2	.674	1
1202		min		.163	2	.039	2	.062	2	1.569	1	.147	2
1203		max	B	-.023	2	-.175	2	.284	1	.118	2	.687	1
1204		min		-.197	1	-.764	1	.076	2	.052	1	.164	2
1205	P302	max	T	.822	1	.241	1	.29	1	1.601	2	.732	1
1206		min		.176	2	.045	2	.065	2	1.565	1	.158	2
1207		max	B	-.03	2	-.189	2	.306	1	.087	2	.747	1
1208		min		-.219	1	-.832	1	.08	2	.034	1	.176	2
1209	P303	max	T	.789	1	.303	1	.243	1	1.58	2	.689	1
1210		min		.171	2	.058	2	.057	2	1.559	1	.151	2
1211		max	B	-.037	2	-.18	2	.259	1	.125	2	.697	1
1212		min		-.275	1	-.793	1	.072	2	.056	1	.165	2
1213	P304	max	T	.856	1	.328	1	.264	1	1.588	2	.748	1
1214		min		.184	2	.064	2	.06	2	1.557	1	.162	2
1215		max	B	-.044	2	-.195	2	.281	1	.092	2	.759	1
1216		min		-.3	1	-.863	1	.075	2	.037	1	.177	2
1217	P305	max	T	.875	1	.259	1	.308	1	1.604	2	.779	1
1218		min		.187	2	.05	2	.069	2	1.561	1	.168	2
1219		max	B	-.034	2	-.201	2	.325	1	.06	2	.796	1
1220		min		-.237	1	-.888	1	.083	2	.018	1	.186	2
1221	P306	max	T	.915	1	.272	1	.321	1	1.607	2	.813	1
1222		min		.196	2	.053	2	.071	2	1.556	1	.175	2
1223		max	B	-.038	2	-.209	2	.339	1	.035	2	.833	1
1224		min		-.251	1	-.929	1	.086	2	.003	1	.193	2
1225	P307	max	T	.911	1	.348	1	.281	1	1.597	2	.796	1
1226		min		.196	2	.069	2	.063	2	1.555	1	.172	2
1227		max	B	-.049	2	-.206	2	.3	1	.062	2	.809	1
1228		min		-.32	1	-.92	1	.079	2	.019	1	.187	2

Envelope Plate/Shell Principal Stresses (Continued)

	Plate		Sur...	Sigma1 [ksi]	LC	Sigma2 [ksi]	LC	Tau Max [k...	LC	Angle [rad]	LC	Von Mises [ksi]	LC
1229	P308	max	T	.952	1	.363	1	.294	1	1.606	2	.832	1
1230		min		.204	2	.073	2	.066	2	1.551	1	.179	2
1231		max	B	-.053	2	-.215	2	.313	1	.036	2	.846	1
1232		min		-.335	1	-.962	1	.081	2	.002	1	.194	2
1233	P309	max	T	.94	1	.281	1	.33	1	1.612	2	.836	1
1234		min		.202	2	.055	2	.073	2	1.551	1	.181	2
1235		max	B	-.04	2	-.215	2	.348	1	.013	2	.856	1
1236		min		-.26	1	-.956	1	.088	2	-.011	1	.198	2
1237	P310	max	T	.951	1	.285	1	.333	1	1.616	2	.845	1
1238		min		.206	2	.056	2	.075	2	1.546	1	.184	2
1239		max	B	-.041	2	-.218	2	.351	1	-.009	2	.866	1
1240		min		-.265	1	-.967	1	.088	2	-.025	1	.2	2
1241	P311	max	T	.978	1	.373	1	.302	1	1.615	2	.855	1
1242		min		.211	2	.075	2	.068	2	1.546	1	.185	2
1243		max	B	-.055	2	-.221	2	.322	1	.011	2	.87	1
1244		min		-.346	1	-.989	1	.083	2	-.014	1	.199	2
1245	P312	max	T	.989	1	.378	1	.305	1	1.623	2	.864	1
1246		min		.215	2	.076	2	.069	2	1.541	1	.188	2
1247		max	B	-.057	2	-.223	2	.324	1	-.012	2	.879	1
1248		min		-.351	1	-1	1	.083	2	-.029	1	.201	2
1249	P313	max	T	.947	1	.285	1	.331	1	1.619	2	.842	1
1250		min		.207	2	.055	2	.076	2	1.541	1	.186	2
1251		max	B	-.041	2	-.218	2	.348	1	-.03	2	.861	1
1252		min		-.266	1	-.963	1	.088	2	-.038	1	.2	2
1253	P314	max	T	.929	1	.281	1	.324	1	1.625	2	.825	1
1254		min		.206	2	.053	2	.076	2	1.536	1	.185	2
1255		max	B	-.041	2	-.214	2	.34	1	-.047	2	.843	1
1256		min		-.263	1	-.943	1	.087	2	-.051	1	.197	2
1257	P315	max	T	.984	1	.378	1	.303	1	1.63	2	.86	1
1258		min		.216	2	.075	2	.07	2	1.536	1	.19	2
1259		max	B	-.057	2	-.223	2	.322	1	-.035	2	.874	1
1260		min		-.352	1	-.996	1	.083	2	-.045	1	.201	2
1261	P316	max	T	.965	1	.372	1	.296	1	1.636	2	.843	1
1262		min		.215	2	.073	2	.071	2	1.531	1	.189	2
1263		max	B	-.056	2	-.22	2	.313	1	-.057	2	.856	1
1264		min		-.349	1	-.975	1	.082	2	-.059	1	.198	2
1265	P317	max	T	.896	1	.272	1	.312	1	1.622	2	.796	1
1266		min		.202	2	.051	2	.075	2	1.531	1	.182	2
1267		max	B	-.038	2	-.208	2	.327	1	-.064	1	.812	1
1268		min		-.255	1	-.909	1	.085	2	-.073	2	.192	2
1269	P318	max	T	.85	1	.259	1	.296	1	1.621	2	.755	1
1270		min		.195	2	.047	2	.074	2	1.525	1	.176	2
1271		max	B	-.035	2	-.199	2	.309	1	-.078	1	.769	1
1272		min		-.243	1	-.861	1	.082	2	-.096	2	.184	2
1273	P319	max	T	.93	1	.362	1	.284	1	1.64	2	.812	1
1274		min		.211	2	.07	2	.071	2	1.526	1	.186	2
1275		max	B	-.054	2	-.214	2	.3	1	-.074	1	.824	1
1276		min		-.34	1	-.939	1	.08	2	-.08	2	.193	2
1277	P320	max	T	.882	1	.346	1	.268	1	1.641	2	.77	1
1278		min		.204	2	.065	2	.07	2	1.521	1	.181	2
1279		max	B	-.051	2	-.205	2	.282	1	-.089	1	.779	1
1280		min		-.326	1	-.889	1	.077	2	-.105	2	.185	2
1281	P321	max	T	.791	1	.241	1	.275	1	1.619	2	.703	1
1282		min		.185	2	.041	2	.072	2	1.519	1	.169	2
1283		max	B	-.031	2	-.187	2	.287	1	-.092	1	.715	1
1284		min		-.227	1	-.801	1	.078	2	-.122	2	.174	2
1285	P322	max	T	.721	1	.219	1	.251	1	1.614	2	.641	1

Envelope Plate/Shell Principal Stresses (Continued)

	Plate		Sur...	Sigma1 [ksi]	LC	Sigma2 [ksi]	LC	Tau Max [k...	LC	Angle [rad]	LC	Von Mises [ksi]	LC
1286		min		.173	2	.035	2	.069	2	1.513	1	.159	2
1287		max	B	-.025	2	-.172	2	.261	1	-.109	1	.65	1
1288		min		-.205	1	-.728	1	.074	2	-.152	2	.162	2
1289	P323	max	T	.821	1	.326	1	.248	1	1.642	2	.716	1
1290		min		.195	2	.059	2	.068	2	1.516	1	.173	2
1291		max	B	-.046	2	-.193	2	.26	1	-.105	1	.724	1
1292		min		-.308	1	-.827	1	.074	2	-.132	2	.175	2
1293	P324	max	T	.749	1	.301	1	.224	1	1.64	2	.653	1
1294		min		.183	2	.052	2	.065	2	1.511	1	.163	2
1295		max	B	-.04	2	-.179	2	.234	1	-.122	1	.658	1
1296		min		-.284	1	-.752	1	.07	2	-.163	2	.163	2
1297	P325	max	T	.641	1	.191	1	.225	1	1.608	2	.57	1
1298		min		.159	2	.028	2	.065	2	1.504	1	.147	2
1299		max	B	-.017	2	-.156	2	.234	1	-.128	1	.577	1
1300		min		-.178	1	-.645	1	.069	2	-.187	2	.148	2
1301	P326	max	T	.551	1	.158	1	.197	1	1.599	2	.492	1
1302		min		.141	2	.019	2	.061	2	1.494	1	.133	2
1303		max	B	-.007	2	-.136	2	.204	1	-.153	1	.497	1
1304		min		-.145	1	-.553	1	.065	2	-.228	2	.133	2
1305	P327	max	T	.667	1	.271	1	.198	1	1.638	2	.581	1
1306		min		.168	2	.045	2	.062	2	1.507	1	.151	2
1307		max	B	-.032	2	-.162	2	.207	1	-.142	1	.584	1
1308		min		-.255	1	-.668	1	.065	2	-.198	2	.149	2
1309	P328	max	T	.575	1	.236	1	.17	1	1.635	2	.501	1
1310		min		.15	2	.036	2	.057	2	1.502	1	.136	2
1311		max	B	-.022	2	-.143	2	.177	1	-.167	1	.502	1
1312		min		-.22	1	-.575	1	.06	2	-.239	2	.133	2
1313	P329	max	T	.453	1	.119	1	.167	1	1.587	2	.407	1
1314		min		.122	2	.009	2	.056	2	1.478	1	.117	2
1315		max	B	.005	2	-.115	2	.175	1	-.188	1	.411	1
1316		min		-.103	1	-.453	1	.06	2	-.277	2	.118	2
1317	P330	max	T	.347	1	.072	1	.137	1	1.572	2	.317	1
1318		min		.099	2	-.002	2	.051	2	1.455	1	.101	2
1319		max	B	.021	2	-.093	2	.147	1	-.237	1	.323	1
1320		min		-.053	1	-.346	1	.057	2	-.335	2	.104	2
1321	P331	max	T	.476	1	.197	1	.14	1	1.632	2	.414	1
1322		min		.13	2	.026	2	.052	2	1.496	1	.12	2
1323		max	B	-.01	2	-.122	2	.147	1	-.2	1	.414	1
1324		min		-.179	1	-.474	1	.056	2	-.287	2	.117	2
1325	P332	max	T	.369	1	.152	1	.109	1	1.63	2	.321	1
1326		min		.108	2	.015	2	.047	2	1.486	1	.101	2
1327		max	B	.004	2	-.099	2	.118	1	-.251	1	.322	1
1328		min		-.131	1	-.367	1	.052	2	-.343	2	.102	2
1329	P333	max	T	.233	1	.017	1	.108	1	1.555	2	.225	1
1330		min		.075	2	-.016	2	.045	2	1.415	1	.084	2
1331		max	B	.039	2	-.068	2	.121	1	-.311	1	.238	1
1332		min		.008	1	-.234	1	.054	2	-.401	2	.094	2
1333	P334	max	T	.113	1	-.032	2	.081	1	1.534	2	.143	1
1334		min		.048	2	-.048	1	.04	2	1.342	1	.069	2
1335		max	B	.084	1	-.042	2	.101	1	-.421	1	.175	1
1336		min		.062	2	-.118	1	.052	2	-.471	2	.091	2
1337	P335	max	T	.256	1	.101	1	.077	1	1.63	2	.223	1
1338		min		.083	2	.003	2	.04	2	1.466	1	.082	2
1339		max	B	.021	2	-.075	2	.091	1	-.334	1	.228	1
1340		min		-.074	1	-.255	1	.048	2	-.409	2	.088	2
1341	P336	max	T	.136	1	.045	1	.045	1	1.635	2	.12	1
1342		min		.056	2	-.011	2	.033	2	1.408	1	.062	2

Envelope Plate/Shell Principal Stresses (Continued)

	Plate		Sur...	Sigma1 [ksi]	LC	Sigma2 [ksi]	LC	Tau Max [k...	LC	Angle [rad]	LC	Von Mises [ksi]	LC
1343		max	B	.042	2	-.05	2	.069	1	-.483	2	.14	1
1344		min		-.005	1	-.142	1	.046	2	-.485	1	.08	2
1345	P337	max	T	.017	2	-.05	2	.057	1	1.509	2	.121	1
1346		min		-.013	1	-.127	1	.033	2	1.19	1	.06	2
1347		max	B	.179	1	0	1	.09	1	-.543	2	.179	1
1348		min		.09	2	-.015	2	.052	2	-.576	1	.098	2
1349	P338	max	T	-.018	2	-.07	2	.046	1	1.47	2	.201	1
1350		min		-.138	1	-.23	1	.026	2	.876	1	.063	2
1351		max	B	.3	1	.117	1	.091	1	-.614	2	.262	1
1352		min		.123	2	.015	2	.054	2	-.758	1	.117	2
1353	P339	max	T	.025	2	-.021	1	.025	2	1.645	2	.043	2
1354		min		.013	1	-.025	2	.017	1	1.057	1	.03	1
1355		max	B	.083	1	-.024	2	.06	1	-.565	2	.106	1
1356		min		.066	2	-.036	1	.045	2	-.734	1	.08	2
1357	P340	max	T	-.009	2	-.04	2	.034	1	1.658	2	.119	1
1358		min		-.07	1	-.137	1	.015	2	.3	1	.036	2
1359		max	B	.199	1	.056	1	.072	1	2.157	1	.178	1
1360		min		.094	2	.003	2	.045	2	-.652	2	.092	2
1361	P341	max	T	-.058	2	-.092	2	.065	1	1.354	2	.33	1
1362		min		-.245	1	-.375	1	.017	2	.548	1	.081	2
1363		max	B	.451	1	.227	1	.112	1	2.224	1	.391	1
1364		min		.163	2	.047	2	.058	2	-.686	2	.146	2
1365	P342	max	T	-.097	2	-.125	2	.114	1	.903	2	.491	1
1366		min		-.335	1	-.563	1	.014	2	.455	1	.114	2
1367		max	B	.643	1	.327	1	.158	1	2.153	1	.557	1
1368		min		.214	2	.078	2	.068	2	-.743	2	.188	2
1369	P343	max	T	-.046	2	-.054	2	.075	1	1.53	2	.244	1
1370		min		-.132	1	-.282	1	.004	2	.225	1	.05	2
1371		max	B	.338	1	.132	1	.103	1	2.031	1	.295	1
1372		min		.127	2	.029	2	.049	2	-.735	2	.115	2
1373	P344	max	T	-.064	2	-.086	2	.122	1	.348	2	.371	1
1374		min		-.182	1	-.427	1	.011	2	.26	1	.077	2
1375		max	B	.483	1	.192	1	.145	1	2.35	2	.421	1
1376		min		.163	2	.05	2	.057	2	2.007	1	.144	2
1377	P345	max	T	-.115	2	-.169	2	.17	1	.637	2	.637	1
1378		min		-.394	1	-.734	1	.027	2	.476	1	.149	2
1379		max	B	.818	1	.396	1	.211	1	2.165	1	.708	1
1380		min		.263	2	.101	2	.081	2	-.752	2	.23	2
1381	P346	max	T	-.112	2	-.213	2	.247	1	.617	2	.769	1
1382		min		-.392	1	-.886	1	.051	2	.542	1	.185	2
1383		max	B	.969	1	.406	1	.282	1	2.212	1	.843	1
1384		min		.305	2	.109	2	.098	2	-.738	2	.268	2
1385	P347	max	T	-.068	2	-.125	2	.177	1	.4	2	.492	1
1386		min		-.208	1	-.561	1	.029	2	.342	1	.108	2
1387		max	B	.619	1	.225	1	.197	1	2.33	2	.543	1
1388		min		.199	2	.062	2	.068	2	2.047	1	.176	2
1389	P348	max	T	-.061	2	-.158	2	.233	1	.517	2	.589	1
1390		min		-.196	1	-.662	1	.048	2	.461	1	.138	2
1391		max	B	.722	1	.217	1	.252	1	2.136	1	.642	1
1392		min		.228	2	.062	2	.083	2	-.783	2	.204	2
1393	P349	max	T	-.084	2	-.24	2	.328	1	.718	2	.845	1
1394		min		-.297	1	-.954	1	.078	2	.664	1	.211	2
1395		max	B	1.034	1	.319	1	.358	1	2.312	1	.917	1
1396		min		.324	2	.088	2	.118	2	-.678	2	.29	2
1397	P350	max	T	-.041	2	-.249	2	.402	1	.838	2	.888	1
1398		min		-.149	1	-.953	1	.104	2	.793	1	.231	2
1399		max	B	1.027	1	.175	1	.426	1	-.6	2	.952	1

Envelope Plate/Shell Principal Stresses (Continued)

	Plate		Sur...	Sigma1 [ksi]	LC	Sigma2 [ksi]	LC	Tau Max [k...	LC	Angle [rad]	LC	Von Mises [ksi]	LC
1400		min		.322	2	.052	2	.135	2	-.72	1	.3	2
1401	P351	max	T	-.043	2	-.18	2	.288	1	.655	2	.659	1
1402		min		-.142	1	-.719	1	.069	2	.603	1	.163	2
1403		max	B	.78	1	.166	1	.307	1	2.254	1	.712	1
1404		min		.246	2	.049	2	.099	2	-.716	2	.226	2
1405	P352	max	T	-.016	2	-.19	2	.337	1	.806	2	.701	1
1406		min		-.053	1	-.726	1	.087	2	.759	1	.182	2
1407		max	B	.787	1	.076	1	.356	1	-.62	2	.752	1
1408		min		.25	2	.025	2	.113	2	-.749	1	.239	2
1409	P353	max	T	.016	1	-.239	2	.45	1	.972	2	.893	1
1410		min		.003	2	-.884	1	.121	2	.929	1	.241	2
1411		max	B	.951	1	.007	2	.472	1	-.501	2	.948	1
1412		min		.301	2	.007	1	.147	2	-.597	1	.297	2
1413	P354	max	T	.029	1	-.19	2	.346	1	1.194	2	.678	1
1414		min		.006	2	-.663	1	.098	2	1.146	1	.193	2
1415		max	B	.729	1	0	2	.373	1	-.304	2	.738	1
1416		min		.244	2	-.017	1	.122	2	-.386	1	.244	2
1417	P355	max	T	.041	1	-.186	2	.362	1	.96	2	.705	1
1418		min		.009	2	-.684	1	.098	2	.92	1	.191	2
1419		max	B	.745	1	0	2	.383	1	-.503	2	.756	1
1420		min		.239	2	-.021	1	.12	2	-.601	1	.24	2
1421	P356	max	T	.025	1	-.148	2	.27	1	1.195	2	.528	1
1422		min		.006	2	-.515	1	.077	2	1.154	1	.151	2
1423		max	B	.578	1	-.002	2	.297	1	-.294	2	.587	1
1424		min		.196	2	-.016	1	.099	2	-.372	1	.197	2
1425	P357	max	T	.019	1	-.082	2	.189	1	2.087	2	.369	1
1426		min		.012	2	-.359	1	.047	2	2.001	1	.088	2
1427		max	B	.464	1	-.001	2	.235	1	.34	1	.467	1
1428		min		.163	2	-.006	1	.082	2	.273	2	.163	2
1429	P358	max	T	.039	1	-.12	2	.264	1	2.302	2	.509	1
1430		min		.023	2	-.489	1	.072	2	2.253	1	.133	2
1431		max	B	.584	1	-.004	2	.298	1	.585	1	.59	1
1432		min		.191	2	-.013	1	.097	2	.488	2	.192	2
1433	P359	max	T	.028	1	-.044	2	.111	1	2.259	2	.21	1
1434		min		.016	2	-.195	1	.03	2	2.127	1	.054	2
1435		max	B	.285	1	-.002	2	.147	1	.398	1	.29	1
1436		min		.115	2	-.01	1	.059	2	.299	2	.116	2
1437	P360	max	T	.061	1	-.077	2	.184	1	-.729	2	.341	1
1438		min		.03	2	-.306	1	.053	2	-.776	1	.095	2
1439		max	B	.385	1	-.008	2	.208	1	.66	1	.401	1
1440		min		.138	2	-.031	1	.073	2	.529	2	.143	2
1441	P361	max	T	.011	2	-.129	2	.256	1	-.676	2	.518	1
1442		min		-.01	1	-.523	1	.07	2	-.701	1	.134	2
1443		max	B	.614	1	.042	1	.286	1	.749	1	.594	1
1444		min		.196	2	.01	2	.093	2	.611	2	.191	2
1445	P362	max	T	-.003	2	-.126	2	.234	1	-.516	2	.496	1
1446		min		-.052	1	-.52	1	.061	2	-.522	1	.124	2
1447		max	B	.607	1	.088	1	.259	1	.896	1	.568	1
1448		min		.191	2	.022	2	.084	2	.711	2	.181	2
1449	P363	max	T	.052	1	-.087	2	.2	1	-.576	2	.377	1
1450		min		.026	2	-.348	1	.057	2	-.583	1	.102	2
1451		max	B	.42	1	-.003	2	.217	1	.841	1	.427	1
1452		min		.144	2	-.014	1	.074	2	.662	2	.145	2
1453	P364	max	T	.048	1	-.087	2	.204	1	-.414	1	.387	1
1454		min		.021	2	-.361	1	.054	2	-.428	2	.1	2
1455		max	B	.426	1	0	2	.215	1	.991	1	.428	1
1456		min		.141	2	-.005	1	.07	2	.766	2	.141	2

Envelope Plate/Shell Principal Stresses (Continued)

	Plate		Sur...	Sigma1 [ksi]	LC	Sigma2 [ksi]	LC	Tau Max [k...	LC	Angle [rad]	LC	Von Mises [ksi]	LC
1457	P365	max	T	-.012	2	-.113	2	.205	1	-.36	1	.45	1
1458		min		-.072	1	-.482	1	.05	2	-.362	2	.108	2
1459		max	B	.562	1	.11	1	.226	1	1.02	1	.516	1
1460		min		.177	2	.028	2	.074	2	.785	2	.165	2
1461	P366	max	T	-.016	2	-.093	2	.17	1	-.214	2	.379	1
1462		min		-.068	1	-.408	1	.038	2	-.215	1	.086	2
1463		max	B	.481	1	.106	1	.188	1	1.113	1	.438	1
1464		min		.154	2	.027	2	.064	2	.825	2	.143	2
1465	P367	max	T	.055	1	-.08	2	.199	1	-.27	1	.374	1
1466		min		.018	2	-.343	1	.049	2	-.291	2	.091	2
1467		max	B	.402	1	.001	2	.205	1	1.111	1	.406	1
1468		min		.132	2	-.009	1	.065	2	.842	2	.131	2
1469	P368	max	T	.072	1	-.065	2	.183	1	-.148	1	.336	1
1470		min		.018	2	-.294	1	.042	2	-.161	2	.076	2
1471		max	B	.346	1	-.002	2	.186	1	1.203	1	.359	1
1472		min		.115	2	-.025	1	.058	2	.887	2	.116	2
1473	P369	max	T	-.015	2	-.066	2	.131	1	-.063	2	.287	1
1474		min		-.043	1	-.306	1	.026	2	-.086	1	.06	2
1475		max	B	.371	1	.078	1	.146	1	1.168	1	.338	1
1476		min		.126	2	.018	2	.054	2	.822	2	.118	2
1477	P370	max	T	-.002	1	-.037	2	.091	1	.144	2	.184	1
1478		min		-.008	2	-.185	1	.014	2	.041	1	.034	2
1479		max	B	.244	1	.033	1	.106	1	1.167	1	.229	1
1480		min		.097	2	.003	2	.047	2	.775	2	.095	2
1481	P371	max	T	.1	1	-.045	2	.158	1	-.031	2	.28	1
1482		min		.02	2	-.217	1	.033	2	-.039	1	.058	2
1483		max	B	.262	1	-.009	2	.158	1	1.266	1	.292	1
1484		min		.093	2	-.054	1	.051	2	.894	2	.098	2
1485	P372	max	T	.137	1	-.021	2	.128	1	.116	2	.221	1
1486		min		.026	2	-.119	1	.023	2	.062	1	.041	2
1487		max	B	.158	1	-.021	2	.125	1	1.296	1	.218	1
1488		min		.069	2	-.091	1	.045	2	.862	2	.081	2
1489	P373	max	T	.05	1	-.011	2	.055	1	.62	2	.095	1
1490		min		.005	2	-.059	1	.008	2	.212	1	.014	2
1491		max	B	.115	1	-.016	2	.071	1	1.075	1	.13	1
1492		min		.069	2	-.027	1	.042	2	.695	2	.078	2
1493	P374	max	T	.116	1	.057	1	.029	1	1.154	2	.1	1
1494		min		.029	2	.006	2	.011	2	.619	1	.026	2
1495		max	B	.044	2	-.039	2	.051	1	.813	1	.102	1
1496		min		-.002	1	-.103	1	.041	2	.598	2	.071	2
1497	P375	max	T	.18	1	.004	2	.095	1	.333	2	.185	1
1498		min		.035	2	-.01	1	.015	2	.171	1	.033	2
1499		max	B	.044	2	-.036	2	.09	1	1.281	1	.163	1
1500		min		.043	1	-.137	1	.04	2	.79	2	.069	2
1501	P376	max	T	.23	1	.103	1	.063	1	.7	2	.2	1
1502		min		.048	2	.025	2	.011	2	.327	1	.042	2
1503		max	B	.021	2	-.054	2	.057	1	1.175	1	.165	1
1504		min		-.075	1	-.19	1	.037	2	.689	2	.067	2
1505	P377	max	T	.216	1	.137	1	.039	1	1.341	2	.189	1
1506		min		.055	2	.019	2	.018	2	1.185	1	.049	2
1507		max	B	.022	2	-.062	2	.057	1	.501	2	.176	1
1508		min		-.089	1	-.203	1	.042	2	.476	1	.076	2
1509	P378	max	T	.331	1	.194	1	.068	1	1.422	2	.288	1
1510		min		.081	2	.031	2	.025	2	1.386	1	.071	2
1511		max	B	.004	2	-.086	2	.082	1	.414	2	.275	1
1512		min		-.154	1	-.317	1	.045	2	.287	1	.088	2
1513	P379	max	T	.291	1	.208	1	.041	1	1.066	2	.26	1

Envelope Plate/Shell Principal Stresses (Continued)

	Plate		Sur...	Sigma1 [ksi]	LC	Sigma2 [ksi]	LC	Tau Max [k...	LC	Angle [rad]	LC	Von Mises [ksi]	LC
1514		min		.069	2	.041	2	.014	2	.635	1	.06	2
1515		max	B	0	2	-.074	2	.037	1	.844	1	.228	1
1516		min		-.181	1	-.256	1	.037	2	.577	2	.074	2
1517	P380	max	T	.376	1	.288	1	.044	1	1.258	2	.341	1
1518		min		.092	2	.053	2	.019	2	1.079	1	.08	2
1519		max	B	-.016	2	-.096	2	.048	1	.471	2	.315	1
1520		min		-.255	1	-.352	1	.04	2	.427	1	.089	2
1521	P381	max	T	.444	1	.245	1	.1	1	1.468	2	.385	1
1522		min		.105	2	.042	2	.031	2	1.464	1	.091	2
1523		max	B	-.012	2	-.109	2	.112	1	.339	2	.375	1
1524		min		-.209	1	-.432	1	.049	2	.197	1	.104	2
1525	P382	max	T	.551	1	.291	1	.13	1	1.502	1	.478	1
1526		min		.126	2	.053	2	.037	2	1.497	2	.11	2
1527		max	B	-.025	2	-.131	2	.143	1	.274	2	.47	1
1528		min		-.257	1	-.543	1	.053	2	.145	1	.12	2
1529	P383	max	T	.479	1	.345	1	.067	1	1.356	2	.428	1
1530		min		.114	2	.065	2	.025	2	1.317	1	.099	2
1531		max	B	-.031	2	-.118	2	.076	1	.38	2	.408	1
1532		min		-.31	1	-.462	1	.043	2	.244	1	.105	2
1533	P384	max	T	.584	1	.394	1	.095	1	1.42	1	.516	1
1534		min		.136	2	.075	2	.03	2	1.415	2	.118	2
1535		max	B	-.044	2	-.139	2	.108	1	.303	2	.501	1
1536		min		-.357	1	-.572	1	.047	2	.165	1	.123	2
1537	P385	max	T	.651	1	.333	1	.159	1	1.524	1	.564	1
1538		min		.146	2	.062	2	.042	2	1.519	2	.127	2
1539		max	B	-.036	2	-.152	2	.174	1	.22	2	.56	1
1540		min		-.299	1	-.646	1	.058	2	.109	1	.137	2
1541	P386	max	T	.743	1	.37	1	.186	1	1.537	2	.643	1
1542		min		.164	2	.072	2	.046	2	1.536	1	.142	2
1543		max	B	-.046	2	-.17	2	.203	1	.173	2	.643	1
1544		min		-.336	1	-.741	1	.062	2	.082	1	.153	2
1545	P387	max	T	.685	1	.438	1	.124	1	1.471	1	.601	1
1546		min		.155	2	.086	2	.035	2	1.454	2	.135	2
1547		max	B	-.055	2	-.159	2	.139	1	.239	2	.589	1
1548		min		-.4	1	-.677	1	.052	2	.12	1	.14	2
1549	P388	max	T	.778	1	.479	1	.15	1	1.498	1	.68	1
1550		min		.173	2	.096	2	.039	2	1.485	2	.15	2
1551		max	B	-.065	2	-.178	2	.168	1	.185	2	.672	1
1552		min		-.439	1	-.774	1	.056	2	.087	1	.156	2
1553	P389	max	T	.824	1	.403	1	.211	1	1.553	2	.714	1
1554		min		.18	2	.08	2	.05	2	1.542	1	.156	2
1555		max	B	-.054	2	-.187	2	.229	1	.132	2	.716	1
1556		min		-.368	1	-.825	1	.066	2	.059	1	.167	2
1557	P390	max	T	.894	1	.431	1	.232	1	1.569	2	.774	1
1558		min		.193	2	.087	2	.053	2	1.545	1	.167	2
1559		max	B	-.061	2	-.201	2	.251	1	.096	2	.779	1
1560		min		-.395	1	-.898	1	.07	2	.038	1	.179	2
1561	P391	max	T	.862	1	.515	1	.174	1	1.513	1	.751	1
1562		min		.189	2	.105	2	.042	2	1.512	2	.164	2
1563		max	B	-.074	2	-.195	2	.194	1	.139	2	.747	1
1564		min		-.474	1	-.861	1	.06	2	.06	1	.17	2
1565	P392	max	T	.935	1	.547	1	.194	1	1.539	2	.813	1
1566		min		.202	2	.113	2	.045	2	1.521	1	.175	2
1567		max	B	-.081	2	-.209	2	.216	1	.098	2	.812	1
1568		min		-.504	1	-.936	1	.064	2	.036	1	.182	2
1569	P393	max	T	.95	1	.453	1	.248	1	1.586	2	.823	1
1570		min		.204	2	.093	2	.056	2	1.544	1	.177	2

Envelope Plate/Shell Principal Stresses (Continued)

	Plate		Sur...	Sigma1 [ksi]	LC	Sigma2 [ksi]	LC	Tau Max [k...	LC	Angle [rad]	LC	Von Mises [ksi]	LC
1571		max	B	-.066	2	-.213	2	.269	1	.064	2	.83	1
1572		min		-.418	1	-.956	1	.073	2	.018	1	.188	2
1573	P394	max	T	.993	1	.471	1	.261	1	1.602	2	.86	1
1574		min		.213	2	.097	2	.058	2	1.542	1	.185	2
1575		max	B	-.071	2	-.221	2	.283	1	.035	2	.869	1
1576		min		-.435	1	-1	1	.075	2	0	1	.196	2
1577	P395	max	T	.994	1	.574	1	.21	1	1.567	2	.864	1
1578		min		.213	2	.119	2	.047	2	1.525	1	.185	2
1579		max	B	-.087	2	-.22	2	.234	1	.063	2	.865	1
1580		min		-.53	1	-.998	1	.067	2	.014	1	.192	2
1581	P396	max	T	1.038	1	.595	1	.221	1	1.595	2	.902	1
1582		min		.222	2	.124	2	.049	2	1.526	1	.193	2
1583		max	B	-.092	2	-.229	2	.246	1	.031	2	.904	1
1584		min		-.551	1	-1.043	1	.069	2	-.007	1	.2	2
1585	P397	max	T	1.02	1	.482	1	.269	1	1.618	2	.883	1
1586		min		.22	2	.099	2	.06	2	1.539	1	.19	2
1587		max	B	-.074	2	-.227	2	.291	1	.008	2	.893	1
1588		min		-.447	1	-1.028	1	.077	2	-.018	1	.201	2
1589	P398	max	T	1.031	1	.487	1	.272	1	1.633	2	.893	1
1590		min		.224	2	.1	2	.062	2	1.534	1	.194	2
1591		max	B	-.076	2	-.23	2	.293	1	-.017	2	.902	1
1592		min		-.454	1	-1.039	1	.077	2	-.036	1	.203	2
1593	P399	max	T	1.066	1	.609	1	.228	1	1.624	2	.926	1
1594		min		.229	2	.127	2	.051	2	1.525	1	.198	2
1595		max	B	-.095	2	-.235	2	.253	1	.002	2	.929	1
1596		min		-.565	1	-1.072	1	.07	2	-.027	1	.205	2
1597	P400	max	T	1.077	1	.615	1	.231	1	1.65	2	.936	1
1598		min		.233	2	.128	2	.053	2	1.523	1	.202	2
1599		max	B	-.098	2	-.238	2	.255	1	-.024	2	.938	1
1600		min		-.573	1	-1.083	1	.07	2	-.047	1	.207	2
1601	P401	max	T	1.025	1	.487	1	.269	1	1.646	2	.888	1
1602		min		.225	2	.099	2	.063	2	1.53	1	.196	2
1603		max	B	-.076	2	-.23	2	.29	1	-.041	2	.897	1
1604		min		-.454	1	-1.033	1	.077	2	-.053	1	.203	2
1605	P402	max	T	1.004	1	.48	1	.262	1	1.657	2	.87	1
1606		min		.225	2	.096	2	.064	2	1.525	1	.195	2
1607		max	B	-.075	2	-.227	2	.281	1	-.064	2	.878	1
1608		min		-.45	1	-1.011	1	.076	2	-.07	1	.2	2
1609	P403	max	T	1.071	1	.614	1	.228	1	1.672	2	.931	1
1610		min		.235	2	.127	2	.054	2	1.521	1	.204	2
1611		max	B	-.098	2	-.237	2	.251	1	-.049	2	.933	1
1612		min		-.574	1	-1.076	1	.07	2	-.065	1	.207	2
1613	P404	max	T	1.048	1	.605	1	.221	1	1.69	2	.911	1
1614		min		.235	2	.123	2	.056	2	1.519	1	.204	2
1615		max	B	-.098	2	-.234	2	.242	1	-.073	2	.912	1
1616		min		-.568	1	-1.052	1	.068	2	-.083	1	.204	2
1617	P405	max	T	.968	1	.467	1	.251	1	1.668	2	.838	1
1618		min		.221	2	.092	2	.065	2	1.521	1	.192	2
1619		max	B	-.073	2	-.221	2	.267	1	-.085	2	.844	1
1620		min		-.439	1	-.974	1	.074	2	-.087	1	.195	2
1621	P406	max	T	.917	1	.448	1	.235	1	1.669	2	.795	1
1622		min		.214	2	.086	2	.064	2	1.517	1	.187	2
1623		max	B	-.069	2	-.212	2	.249	1	-.103	1	.799	1
1624		min		-.423	1	-.921	1	.071	2	-.115	2	.187	2
1625	P407	max	T	1.009	1	.589	1	.21	1	1.702	2	.878	1
1626		min		.232	2	.118	2	.057	2	1.517	1	.201	2
1627		max	B	-.095	2	-.228	2	.229	1	-.099	2	.878	1

Envelope Plate/Shell Principal Stresses (Continued)

	Plate		Sur...	Sigma1 [ksi]	LC	Sigma2 [ksi]	LC	Tau Max [k...	LC	Angle [rad]	LC	Von Mises [ksi]	LC
1628		min		-.555	1	-1.012	1	.066	2	-.102	1	.199	2
1629	P408	max	T	.955	1	.566	1	.195	1	1.71	2	.832	1
1630		min		.226	2	.111	2	.057	2	1.516	1	.195	2
1631		max	B	-.091	2	-.219	2	.211	1	-.12	1	.83	1
1632		min		-.535	1	-.956	1	.064	2	-.125	2	.191	2
1633	P409	max	T	.854	1	.425	1	.215	1	1.672	2	.739	1
1634		min		.205	2	.08	2	.063	2	1.514	1	.179	2
1635		max	B	-.064	2	-.2	2	.227	1	-.121	1	.742	1
1636		min		-.402	1	-.856	1	.068	2	-.144	2	.177	2
1637	P410	max	T	.779	1	.396	1	.191	1	1.673	2	.675	1
1638		min		.193	2	.072	2	.06	2	1.512	1	.169	2
1639		max	B	-.058	2	-.186	2	.202	1	-.139	1	.675	1
1640		min		-.376	1	-.779	1	.064	2	-.176	2	.165	2
1641	P411	max	T	.888	1	.538	1	.175	1	1.713	2	.775	1
1642		min		.216	2	.103	2	.056	2	1.516	1	.187	2
1643		max	B	-.086	2	-.208	2	.189	1	-.14	1	.772	1
1644		min		-.51	1	-.888	1	.061	2	-.156	2	.181	2
1645	P412	max	T	.81	1	.505	1	.153	1	1.716	2	.708	1
1646		min		.204	2	.095	2	.054	2	1.517	1	.177	2
1647		max	B	-.079	2	-.193	2	.164	1	-.162	1	.704	1
1648		min		-.48	1	-.808	1	.057	2	-.191	2	.168	2
1649	P413	max	T	.694	1	.364	1	.165	1	1.674	2	.601	1
1650		min		.178	2	.064	2	.057	2	1.511	1	.156	2
1651		max	B	-.05	2	-.169	2	.174	1	-.161	1	.599	1
1652		min		-.344	1	-.692	1	.06	2	-.212	2	.15	2
1653	P414	max	T	.6	1	.327	1	.136	1	1.676	2	.521	1
1654		min		.16	2	.055	2	.052	2	1.513	1	.141	2
1655		max	B	-.04	2	-.15	2	.145	1	-.189	1	.517	1
1656		min		-.308	1	-.597	1	.055	2	-.255	2	.135	2
1657	P415	max	T	.722	1	.468	1	.127	1	1.719	2	.634	1
1658		min		.188	2	.086	2	.051	2	1.522	1	.163	2
1659		max	B	-.071	2	-.177	2	.137	1	-.189	1	.628	1
1660		min		-.445	1	-.718	1	.053	2	-.232	2	.154	2
1661	P416	max	T	.626	1	.428	1	.099	1	1.724	2	.554	1
1662		min		.17	2	.077	2	.047	2	1.533	1	.148	2
1663		max	B	-.061	2	-.158	2	.108	1	-.227	1	.546	1
1664		min		-.406	1	-.621	1	.048	2	-.28	2	.138	2
1665	P417	max	T	.499	1	.287	1	.106	1	1.68	2	.434	1
1666		min		.14	2	.046	2	.047	2	1.517	1	.123	2
1667		max	B	-.029	2	-.129	2	.114	1	-.228	1	.43	1
1668		min		-.267	1	-.495	1	.05	2	-.306	2	.118	2
1669	P418	max	T	.392	1	.243	1	.074	1	1.69	2	.343	1
1670		min		.117	2	.035	2	.041	2	1.526	1	.104	2
1671		max	B	-.015	2	-.107	2	.085	1	-.296	1	.338	1
1672		min		-.22	1	-.389	1	.046	2	-.367	2	.1	2
1673	P419	max	T	.523	1	.386	1	.068	1	1.736	2	.47	1
1674		min		.15	2	.067	2	.041	2	1.557	1	.13	2
1675		max	B	-.05	2	-.138	2	.078	1	-.291	1	.461	1
1676		min		-.363	1	-.519	1	.044	2	-.339	2	.121	2
1677	P420	max	T	.416	1	.342	1	.037	1	1.758	2	.385	1
1678		min		.127	2	.058	2	.034	2	1.621	1	.11	2
1679		max	B	-.037	2	-.116	2	.051	1	-.412	2	.375	1
1680		min		-.314	1	-.415	1	.04	2	-.431	1	.103	2
1681	P421	max	T	.279	1	.196	1	.041	1	1.709	2	.249	1
1682		min		.092	2	.024	2	.034	2	1.544	1	.083	2
1683		max	B	0	2	-.084	2	.058	1	-.435	1	.244	1
1684		min		-.165	1	-.281	1	.042	2	-.441	2	.084	2

Envelope Plate/Shell Principal Stresses (Continued)

	Plate		Sur...	Sigma1 [ksi]	LC	Sigma2 [ksi]	LC	Tau Max [k...	LC	Angle [rad]	LC	Von Mises [ksi]	LC
1685	P422	max	T	.162	1	.147	1	.026	2	1.744	2	.155	1
1686		min		.065	2	.013	2	.007	1	1.63	1	.059	2
1687		max	B	.019	2	-.06	2	.043	1	-.528	2	.156	1
1688		min		-.094	1	-.18	1	.039	2	-.736	1	.071	2
1689	P423	max	T	.311	1	.292	1	.027	2	2.15	1	.302	1
1690		min		.102	2	.048	2	.009	1	1.801	2	.088	2
1691		max	B	-.022	2	-.094	2	.036	2	-.503	2	.291	1
1692		min		-.251	1	-.319	1	.034	1	-.784	1	.085	2
1693	P424	max	T	.255	1	.189	1	.033	1	1.887	2	.229	1
1694		min		.076	2	.038	2	.019	2	-.184	1	.065	2
1695		max	B	-.005	2	-.072	2	.046	1	1.955	1	.219	1
1696		min		-.158	1	-.25	1	.034	2	-.612	2	.07	2
1697	P425	max	T	.097	1	.04	1	.028	1	1.817	2	.084	1
1698		min		.036	2	.001	2	.017	2	-.021	1	.035	2
1699		max	B	.04	2	-.036	2	.053	1	2.06	1	.103	1
1700		min		.005	1	-.101	1	.038	2	-.628	2	.066	2
1701	P426	max	T	.047	1	-.01	2	.066	1	2.044	2	.116	1
1702		min		.005	2	-.085	1	.008	2	.031	1	.014	2
1703		max	B	.123	1	-.014	2	.081	1	1.906	1	.146	1
1704		min		.065	2	-.039	1	.039	2	-.731	2	.073	2
1705	P427	max	T	.209	1	.075	1	.067	1	2.108	2	.184	1
1706		min		.049	2	.027	2	.011	2	-.085	1	.043	2
1707		max	B	.015	2	-.052	2	.074	1	1.802	1	.177	1
1708		min		-.049	1	-.196	1	.034	2	-.731	2	.061	2
1709	P428	max	T	.167	1	.01	2	.102	1	-.024	1	.188	1
1710		min		.028	2	-.037	1	.009	2	-.469	2	.025	2
1711		max	B	.063	1	-.034	2	.106	1	2.303	2	.188	1
1712		min		.038	2	-.148	1	.036	2	1.762	1	.063	2
1713	P429	max	T	.002	1	-.031	2	.105	1	.089	1	.21	1
1714		min		-.016	2	-.209	1	.007	2	-.161	2	.027	2
1715		max	B	.246	1	.014	1	.116	1	2.325	2	.24	1
1716		min		.092	2	.005	2	.044	2	1.871	1	.09	2
1717	P430	max	T	-.024	2	-.062	2	.146	1	.167	1	.31	1
1718		min		-.034	1	-.325	1	.019	2	.146	2	.054	2
1719		max	B	.364	1	.055	1	.155	1	2.275	2	.34	1
1720		min		.122	2	.02	2	.051	2	1.897	1	.113	2
1721	P431	max	T	.129	1	-.015	2	.136	1	.039	1	.236	1
1722		min		.018	2	-.143	1	.017	2	-.079	2	.029	2
1723		max	B	.17	1	-.02	2	.138	1	2.227	2	.241	1
1724		min		.063	2	-.106	1	.041	2	1.773	1	.075	2
1725	P432	max	T	.097	1	-.041	2	.167	1	.114	1	.298	1
1726		min		.012	2	-.237	1	.027	2	.099	2	.048	2
1727		max	B	.265	1	-.009	2	.168	1	2.193	2	.307	1
1728		min		.087	2	-.07	1	.048	2	1.817	1	.092	2
1729	P433	max	T	-.026	2	-.092	2	.184	1	.299	2	.399	1
1730		min		-.054	1	-.423	1	.033	2	.268	1	.082	2
1731		max	B	.465	1	.079	1	.193	1	2.271	2	.431	1
1732		min		.149	2	.028	2	.061	2	1.965	1	.137	2
1733	P434	max	T	-.022	2	-.115	2	.219	1	.442	2	.467	1
1734		min		-.055	1	-.492	1	.046	2	.391	1	.106	2
1735		max	B	.537	1	.081	1	.228	1	2.311	2	.501	1
1736		min		.171	2	.028	2	.071	2	2.066	1	.159	2
1737	P435	max	T	.073	1	-.064	2	.192	1	.233	2	.353	1
1738		min		.009	2	-.311	1	.037	2	.204	1	.069	2
1739		max	B	.341	1	-.002	2	.193	1	2.202	2	.365	1
1740		min		.109	2	-.044	1	.055	2	1.887	1	.11	2
1741	P436	max	T	.06	1	-.081	2	.209	1	.364	2	.391	1

Envelope Plate/Shell Principal Stresses (Continued)

	Plate		Sur...	Sigma1 [ksi]	LC	Sigma2 [ksi]	LC	Tau Max [k...	LC	Angle [rad]	LC	Von Mises [ksi]	LC
1742		min		.009	2	-.358	1	.045	2	.313	1	.086	2
1743		max	B	.39	1	0	2	.209	1	2.248	2	.405	1
1744		min		.124	2	-.029	1	.062	2	1.984	1	.124	2
1745	P437	max	T	-.013	2	-.131	2	.246	1	.593	2	.51	1
1746		min		-.033	1	-.526	1	.059	2	.537	1	.125	2
1747		max	B	.573	1	.059	1	.257	1	2.195	1	.546	1
1748		min		.184	2	.021	2	.081	2	-.754	2	.174	2
1749	P438	max	T	.008	1	-.137	2	.267	1	.751	2	.529	1
1750		min		0	2	-.525	1	.069	2	.701	1	.138	2
1751		max	B	.575	1	.015	1	.28	1	2.344	1	.568	1
1752		min		.187	2	.008	2	.089	2	-.652	2	.183	2
1753	P439	max	T	.056	1	-.091	2	.215	1	.503	2	.405	1
1754		min		.012	2	-.373	1	.052	2	.444	1	.098	2
1755		max	B	.409	1	-.001	2	.217	1	2.325	2	.422	1
1756		min		.133	2	-.026	1	.067	2	2.106	1	.133	2
1757	P440	max	T	.063	1	-.094	2	.211	1	.657	2	.395	1
1758		min		.016	2	-.36	1	.055	2	.6	1	.103	2
1759		max	B	.398	1	-.006	2	.217	1	2.256	1	.418	1
1760		min		.133	2	-.036	1	.07	2	-.711	2	.136	2
1761	P441	max	T	.054	1	-.133	2	.27	1	.917	2	.516	1
1762		min		.014	2	-.487	1	.074	2	.878	1	.141	2
1763		max	B	.54	1	-.006	2	.288	1	-.524	2	.558	1
1764		min		.178	2	-.035	1	.092	2	-.632	1	.182	2
1765	P442	max	T	.026	1	-.103	2	.188	1	1.159	2	.364	1
1766		min		.006	2	-.35	1	.054	2	1.119	1	.106	2
1767		max	B	.409	1	-.002	2	.213	1	-.305	2	.417	1
1768		min		.145	2	-.016	1	.074	2	-.39	1	.146	2
1769	P443	max	T	.072	1	-.088	2	.194	1	.824	2	.358	1
1770		min		.02	2	-.316	1	.054	2	.779	1	.099	2
1771		max	B	.359	1	-.011	2	.205	1	-.578	2	.387	1
1772		min		.125	2	-.051	1	.068	2	-.71	1	.131	2
1773	P444	max	T	.033	1	-.06	2	.117	1	1.054	2	.218	1
1774		min		.009	2	-.2	1	.035	2	1.003	1	.065	2
1775		max	B	.25	1	-.004	2	.135	1	-.348	2	.261	1
1776		min		.097	2	-.02	1	.05	2	-.463	1	.099	2
1777	P445	max	T	.063	1	-.019	2	.069	1	-.546	2	.119	1
1778		min		.03	2	-.074	1	.024	2	-.638	1	.042	2
1779		max	B	.131	1	-.004	2	.077	1	.599	1	.144	1
1780		min		.071	2	-.023	1	.038	2	.37	2	.073	2
1781	P446	max	T	.104	1	-.045	2	.137	1	-.553	2	.24	1
1782		min		.042	2	-.17	1	.043	2	-.561	1	.075	2
1783		max	B	.224	1	-.014	2	.142	1	.826	1	.26	1
1784		min		.093	2	-.061	1	.054	2	.614	2	.101	2
1785	P447	max	T	.155	1	-.008	2	.091	1	-.222	1	.17	1
1786		min		.053	2	-.028	1	.031	2	-.263	2	.058	2
1787		max	B	.039	1	-.009	2	.061	1	1.15	1	.107	1
1788		min		.034	2	-.082	1	.021	2	.58	2	.039	2
1789	P448	max	T	.181	1	-.025	2	.136	1	-.299	1	.24	1
1790		min		.06	2	-.091	1	.043	2	-.358	2	.076	2
1791		max	B	.116	1	-.024	2	.118	1	1.106	1	.205	1
1792		min		.056	2	-.121	1	.04	2	.772	2	.071	2
1793	P449	max	T	.124	1	-.056	2	.173	1	-.412	1	.303	1
1794		min		.044	2	-.221	1	.05	2	-.439	2	.087	2
1795		max	B	.269	1	-.016	2	.173	1	.994	1	.314	1
1796		min		.1	2	-.076	1	.058	2	.75	2	.109	2
1797	P450	max	T	.145	1	-.058	2	.194	1	-.286	1	.34	1
1798		min		.044	2	-.244	1	.051	2	-.325	2	.089	2

Envelope Plate/Shell Principal Stresses (Continued)

	Plate		Sur...	Sigma1 [ksi]	LC	Sigma2 [ksi]	LC	Tau Max [k...	LC	Angle [rad]	LC	Von Mises [ksi]	LC
1799		max	B	.288	1	-.018	2	.191	1	1.12	1	.344	1
1800		min		.101	2	-.093	1	.06	2	.847	2	.111	2
1801	P451	max	T	.212	1	-.035	2	.175	1	-.238	1	.306	1
1802		min		.065	2	-.139	1	.05	2	-.3	2	.087	2
1803		max	B	.165	1	-.031	2	.16	1	1.188	1	.277	1
1804		min		.066	2	-.154	1	.049	2	.883	2	.086	2
1805	P452	max	T	.243	1	-.037	2	.202	1	-.167	1	.353	1
1806		min		.068	2	-.162	1	.053	2	-.225	2	.093	2
1807		max	B	.189	1	-.038	2	.187	1	1.261	1	.325	1
1808		min		.069	2	-.186	1	.053	2	.96	2	.094	2
1809	P453	max	T	.168	1	-.054	2	.203	1	-.18	1	.353	1
1810		min		.046	2	-.238	1	.05	2	-.216	2	.086	2
1811		max	B	.278	1	-.022	2	.197	1	1.217	1	.35	1
1812		min		.095	2	-.116	1	.059	2	.919	2	.108	2
1813	P454	max	T	.195	1	-.043	2	.199	1	-.088	1	.344	1
1814		min		.048	2	-.202	1	.045	2	-.114	2	.079	2
1815		max	B	.238	1	-.028	2	.19	1	1.291	1	.333	1
1816		min		.083	2	-.143	1	.055	2	.96	2	.099	2
1817	P455	max	T	.274	1	-.034	2	.216	1	-.1	1	.379	1
1818		min		.072	2	-.159	1	.053	2	-.15	2	.093	2
1819		max	B	.185	1	-.045	2	.201	1	1.321	1	.349	1
1820		min		.065	2	-.218	1	.055	2	1.012	2	.096	2
1821	P456	max	T	.306	1	-.024	2	.218	1	-.037	1	.387	1
1822		min		.075	2	-.129	1	.05	2	-.075	2	.09	2
1823		max	B	.154	1	-.052	2	.202	1	1.371	1	.354	1
1824		min		.056	2	-.251	1	.054	2	1.041	2	.094	2
1825	P457	max	T	.227	1	-.026	2	.183	1	-.006	1	.321	1
1826		min		.051	2	-.14	1	.039	2	-.013	2	.068	2
1827		max	B	.172	1	-.035	2	.173	1	1.345	1	.3	1
1828		min		.065	2	-.175	1	.05	2	.971	2	.088	2
1829	P458	max	T	.262	1	-.005	2	.16	1	.096	2	.295	1
1830		min		.056	2	-.058	1	.031	2	.071	1	.059	2
1831		max	B	.085	1	-.045	2	.148	1	1.38	1	.264	1
1832		min		.044	2	-.211	1	.045	2	.949	2	.077	2
1833	P459	max	T	.34	1	-.01	2	.208	1	.023	1	.383	1
1834		min		.079	2	-.076	1	.044	2	.001	2	.085	2
1835		max	B	.098	1	-.06	2	.192	1	1.411	1	.345	1
1836		min		.042	2	-.286	1	.051	2	1.049	2	.089	2
1837	P460	max	T	.376	1	.009	2	.189	1	.082	2	.377	1
1838		min		.084	2	-.003	1	.038	2	.08	1	.08	2
1839		max	B	.024	2	-.069	2	.172	1	1.44	1	.334	1
1840		min		.022	1	-.322	1	.046	2	1.031	2	.083	2
1841	P461	max	T	.302	1	.04	1	.131	1	.23	2	.284	1
1842		min		.064	2	.017	2	.023	2	.148	1	.057	2
1843		max	B	.022	2	-.057	2	.117	1	1.391	1	.244	1
1844		min		-.017	1	-.252	1	.04	2	.891	2	.071	2
1845	P462	max	T	.346	1	.145	1	.101	1	.428	2	.301	1
1846		min		.073	2	.04	2	.017	2	.238	1	.064	2
1847		max	B	0	2	-.072	2	.084	1	1.366	1	.257	1
1848		min		-.127	1	-.296	1	.036	2	.797	2	.072	2
1849	P463	max	T	.415	1	.086	1	.165	1	.177	2	.379	1
1850		min		.091	2	.03	2	.031	2	.137	1	.08	2
1851		max	B	.003	2	-.079	2	.146	1	1.456	1	.333	1
1852		min		-.069	1	-.362	1	.041	2	.985	2	.081	2
1853	P464	max	T	.457	1	.184	1	.136	1	.302	2	.398	1
1854		min		.099	2	.052	2	.024	2	.199	1	.086	2
1855		max	B	-.018	2	-.091	2	.116	1	1.455	1	.351	1

Envelope Plate/Shell Principal Stresses (Continued)

	Plate		Sur...	Sigma1 [ksi]	LC	Sigma2 [ksi]	LC	Tau Max [k...	LC	Angle [rad]	LC	Von Mises [ksi]	LC
1856		min		-.172	1	-.404	1	.037	2	.905	2	.084	2
1857	P465	max	T	.395	1	.252	1	.071	1	.719	2	.347	1
1858		min		.087	2	.059	2	.014	2	.371	1	.077	2
1859		max	B	-.02	2	-.089	2	.052	1	1.263	1	.306	1
1860		min		-.24	1	-.344	1	.034	2	.678	2	.081	2
1861	P466	max	T	.453	1	.354	1	.049	1	1.005	2	.413	1
1862		min		.105	2	.075	2	.015	2	.614	1	.094	2
1863		max	B	-.037	2	-.108	2	.035	2	.901	1	.377	1
1864		min		-.344	1	-.404	1	.03	1	.554	2	.095	2
1865	P467	max	T	.504	1	.289	1	.107	1	.481	2	.438	1
1866		min		.11	2	.073	2	.018	2	.276	1	.097	2
1867		max	B	-.038	2	-.105	2	.083	1	1.43	1	.392	1
1868		min		-.282	1	-.448	1	.034	2	.793	2	.092	2
1869	P468	max	T	.555	1	.396	1	.08	1	.716	2	.495	1
1870		min		.124	2	.092	2	.016	2	.39	1	.111	2
1871		max	B	-.057	2	-.122	2	.05	1	1.347	1	.453	1
1872		min		-.394	1	-.495	1	.033	2	.66	2	.106	2
1873	P469	max	T	.53	1	.437	1	.047	1	1.185	2	.49	1
1874		min		.126	2	.087	2	.019	2	.98	1	.112	2
1875		max	B	-.052	2	-.128	2	.041	1	.441	2	.46	1
1876		min		-.414	1	-.496	1	.038	2	.395	1	.111	2
1877	P470	max	T	.625	1	.498	1	.064	1	1.288	2	.572	1
1878		min		.147	2	.099	2	.024	2	1.239	1	.13	2
1879		max	B	-.065	2	-.148	2	.069	1	.345	2	.548	1
1880		min		-.465	1	-.604	1	.042	2	.211	1	.129	2
1881	P471	max	T	.615	1	.497	1	.059	1	.937	2	.565	1
1882		min		.141	2	.107	2	.017	2	.581	1	.128	2
1883		max	B	-.073	2	-.14	2	.034	2	1.014	1	.528	1
1884		min		-.502	1	-.55	1	.024	1	.524	2	.121	2
1885	P472	max	T	.689	1	.585	1	.052	1	1.089	2	.643	1
1886		min		.16	2	.121	2	.02	2	.862	1	.145	2
1887		max	B	-.087	2	-.159	2	.036	2	.403	2	.609	1
1888		min		-.576	1	-.638	1	.031	1	.352	1	.138	2
1889	P473	max	T	.724	1	.549	1	.087	1	1.362	1	.654	1
1890		min		.166	2	.11	2	.028	2	1.352	2	.146	2
1891		max	B	-.077	2	-.168	2	.1	1	.266	2	.634	1
1892		min		-.51	1	-.71	1	.046	2	.134	1	.146	2
1893	P474	max	T	.819	1	.596	1	.111	1	1.422	1	.733	1
1894		min		.183	2	.121	2	.031	2	1.399	2	.161	2
1895		max	B	-.087	2	-.187	2	.129	1	.2	2	.717	1
1896		min		-.553	1	-.81	1	.05	2	.089	1	.162	2
1897	P475	max	T	.777	1	.655	1	.061	1	1.182	2	.724	1
1898		min		.179	2	.134	2	.022	2	1.106	1	.161	2
1899		max	B	-.099	2	-.178	2	.059	1	.301	2	.694	1
1900		min		-.628	1	-.745	1	.04	2	.151	1	.155	2
1901	P476	max	T	.87	1	.715	1	.078	1	1.245	2	.804	1
1902		min		.196	2	.147	2	.024	2	1.244	1	.177	2
1903		max	B	-.11	2	-.197	2	.086	1	.216	2	.777	1
1904		min		-.676	1	-.849	1	.043	2	.073	1	.171	2
1905	P477	max	T	.905	1	.639	1	.133	1	1.455	1	.806	1
1906		min		.198	2	.132	2	.033	2	1.44	2	.175	2
1907		max	B	-.096	2	-.203	2	.154	1	.145	2	.793	1
1908		min		-.592	1	-.901	1	.054	2	.054	1	.176	2
1909	P478	max	T	.98	1	.678	1	.151	1	1.481	2	.87	1
1910		min		.211	2	.142	2	.035	2	1.473	1	.187	2
1911		max	B	-.104	2	-.218	2	.176	1	.097	2	.859	1
1912		min		-.628	1	-.979	1	.057	2	.025	1	.188	2

Envelope Plate/Shell Principal Stresses (Continued)

	Plate		Sur...	Sigma1 [ksi]	LC	Sigma2 [ksi]	LC	Tau Max [k...	LC	Angle [rad]	LC	Von Mises [ksi]	LC
1913	P479	max	T	.958	1	.769	1	.094	1	1.317	1	.879	1
1914		min		.211	2	.16	2	.025	2	1.295	2	.19	2
1915		max	B	-.12	2	-.213	2	.111	1	.145	2	.855	1
1916		min		-.723	1	-.944	1	.047	2	.026	1	.185	2
1917	P480	max	T	1.035	1	.819	1	.108	1	1.358	1	.946	1
1918		min		.223	2	.172	2	.025	2	1.351	2	.202	2
1919		max	B	-.129	2	-.227	2	.131	1	.086	2	.925	1
1920		min		-.766	1	-1.027	1	.049	2	-.011	1	.198	2
1921	P481	max	T	1.042	1	.712	1	.165	1	1.527	2	.922	1
1922		min		.222	2	.15	2	.036	2	1.485	1	.196	2
1923		max	B	-.111	2	-.229	2	.192	1	.056	2	.914	1
1924		min		-.66	1	-1.044	1	.059	2	0	1	.198	2
1925	P482	max	T	1.088	1	.738	1	.175	1	1.578	2	.962	1
1926		min		.231	2	.156	2	.037	2	1.492	1	.204	2
1927		max	B	-.116	2	-.238	2	.203	1	.02	2	.955	1
1928		min		-.685	1	-1.091	1	.061	2	-.024	1	.206	2
1929	P483	max	T	1.098	1	.864	1	.117	1	1.424	2	1.002	1
1930		min		.232	2	.184	2	.024	2	1.384	1	.212	2
1931		max	B	-.137	2	-.239	2	.145	1	.036	2	.983	1
1932		min		-.806	1	-1.095	1	.051	2	-.042	1	.208	2
1933	P484	max	T	1.144	1	.9	1	.122	1	1.524	2	1.044	1
1934		min		.24	2	.193	2	.024	2	1.406	1	.22	2
1935		max	B	-.144	2	-.247	2	.153	1	-.005	2	1.027	1
1936		min		-.839	1	-1.145	1	.051	2	-.068	1	.215	2
1937	P485	max	T	1.116	1	.756	1	.18	1	1.631	2	.987	1
1938		min		.238	2	.16	2	.039	2	1.498	1	.21	2
1939		max	B	-.121	2	-.243	2	.209	1	-.01	2	.981	1
1940		min		-.703	1	-1.121	1	.061	2	-.046	1	.211	2
1941	P486	max	T	1.127	1	.764	1	.181	1	1.68	2	.996	1
1942		min		.243	2	.161	2	.041	2	1.503	1	.214	2
1943		max	B	-.124	2	-.246	2	.209	1	-.037	2	.991	1
1944		min		-.713	1	-1.132	1	.061	2	-.065	1	.213	2
1945	P487	max	T	1.172	1	.926	1	.123	1	1.645	2	1.07	1
1946		min		.246	2	.198	2	.024	2	1.429	1	.226	2
1947		max	B	-.15	2	-.252	2	.156	1	-.035	2	1.054	1
1948		min		-.864	1	-1.175	1	.051	2	-.089	1	.22	2
1949	P488	max	T	1.181	1	.939	1	.121	1	1.749	2	1.08	1
1950		min		.252	2	.198	2	.027	2	1.455	1	.23	2
1951		max	B	-.154	2	-.255	2	.154	1	-.062	2	1.065	1
1952		min		-.877	1	-1.185	1	.05	2	-.106	1	.222	2
1953	P489	max	T	1.119	1	.763	1	.178	1	1.719	2	.99	1
1954		min		.246	2	.158	2	.044	2	1.509	1	.216	2
1955		max	B	-.125	2	-.246	2	.205	1	-.061	2	.985	1
1956		min		-.714	1	-1.124	1	.06	2	-.084	1	.213	2
1957	P490	max	T	1.094	1	.75	1	.172	1	1.747	2	.969	1
1958		min		.246	2	.153	2	.046	2	1.514	1	.215	2
1959		max	B	-.124	2	-.242	2	.196	1	-.084	2	.963	1
1960		min		-.706	1	-1.097	1	.059	2	-.102	1	.21	2
1961	P491	max	T	1.171	1	.937	1	.117	1	1.822	2	1.073	1
1962		min		.257	2	.194	2	.031	2	1.484	1	.232	2
1963		max	B	-.156	2	-.254	2	.148	1	-.081	2	1.058	1
1964		min		-.879	1	-1.174	1	.049	2	-.119	1	.222	2
1965	P492	max	T	1.143	1	.92	1	.112	1	1.86	2	1.05	1
1966		min		.259	2	.187	2	.036	2	1.514	1	.232	2
1967		max	B	-.155	2	-.251	2	.139	1	-.099	2	1.034	1
1968		min		-.867	1	-1.145	1	.048	2	-.13	1	.219	2
1969	P493	max	T	1.053	1	.729	1	.162	1	1.764	2	.934	1

Envelope Plate/Shell Principal Stresses (Continued)

	Plate		Sur...	Sigma1 [ksi]	LC	Sigma2 [ksi]	LC	Tau Max [k...	LC	Angle [rad]	LC	Von Mises [ksi]	LC
1970		min		.244	2	.146	2	.049	2	1.519	1	.213	2
1971		max	B	-.121	2	-.236	2	.182	1	-.109	2	.927	1
1972		min		-.689	1	-1.054	1	.058	2	-.12	1	.205	2
1973	P494	max	T	.996	1	.7	1	.148	1	1.772	2	.885	1
1974		min		.238	2	.138	2	.05	2	1.524	1	.207	2
1975		max	B	-.117	2	-.228	2	.165	1	-.137	2	.877	1
1976		min		-.664	1	-.994	1	.055	2	-.14	1	.197	2
1977	P495	max	T	1.099	1	.89	1	.104	1	1.874	2	1.011	1
1978		min		.258	2	.177	2	.041	2	1.541	1	.229	2
1979		max	B	-.152	2	-.245	2	.127	1	-.12	2	.995	1
1980		min		-.844	1	-1.097	1	.047	2	-.144	1	.214	2
1981	P496	max	T	1.039	1	.85	1	.094	1	1.873	2	.959	1
1982		min		.254	2	.167	2	.043	2	1.567	1	.223	2
1983		max	B	-.146	2	-.236	2	.112	1	-.146	2	.943	1
1984		min		-.81	1	-1.034	1	.045	2	-.162	1	.207	2
1985	P497	max	T	.925	1	.664	1	.13	1	1.774	2	.826	1
1986		min		.229	2	.129	2	.05	2	1.53	1	.199	2
1987		max	B	-.111	2	-.216	2	.145	1	-.163	1	.817	1
1988		min		-.633	1	-.922	1	.053	2	-.17	2	.187	2
1989	P498	max	T	.843	1	.624	1	.109	1	1.779	2	.758	1
1990		min		.217	2	.119	2	.049	2	1.539	1	.188	2
1991		max	B	-.104	2	-.202	2	.121	1	-.191	1	.747	1
1992		min		-.596	1	-.838	1	.049	2	-.206	2	.175	2
1993	P499	max	T	.965	1	.804	1	.081	1	1.867	2	.895	1
1994		min		.245	2	.156	2	.044	2	1.593	1	.214	2
1995		max	B	-.139	2	-.225	2	.094	1	-.182	2	.879	1
1996		min		-.77	1	-.958	1	.043	2	-.189	1	.197	2
1997	P500	max	T	.879	1	.753	1	.063	1	1.86	2	.823	1
1998		min		.232	2	.145	2	.043	2	1.63	1	.203	2
1999		max	B	-.131	2	-.211	2	.073	1	-.229	2	.807	1
2000		min		-.724	1	-.871	1	.04	2	-.234	1	.185	2
2001	P501	max	T	.751	1	.582	1	.085	1	1.778	2	.683	1
2002		min		.201	2	.11	2	.045	2	1.556	1	.174	2
2003		max	B	-.095	2	-.186	2	.095	1	-.233	1	.671	1
2004		min		-.556	1	-.746	1	.045	2	-.257	2	.161	2
2005	P502	max	T	.653	1	.537	1	.058	1	1.786	2	.603	1
2006		min		.182	2	.1	2	.041	2	1.593	1	.158	2
2007		max	B	-.085	2	-.167	2	.068	1	-.304	1	.591	1
2008		min		-.512	1	-.647	1	.041	2	-.316	2	.145	2
2009	P503	max	T	.785	1	.7	1	.043	1	1.857	2	.746	1
2010		min		.215	2	.134	2	.04	2	1.706	1	.188	2
2011		max	B	-.121	2	-.195	2	.051	1	-.289	2	.73	1
2012		min		-.674	1	-.776	1	.037	2	-.323	1	.171	2
2013	P504	max	T	.688	1	.643	1	.036	2	1.956	1	.667	1
2014		min		.195	2	.124	2	.022	1	1.865	2	.171	2
2015		max	B	-.11	2	-.177	2	.034	2	-.367	2	.651	1
2016		min		-.619	1	-.679	1	.03	1	-.559	1	.155	2
2017	P505	max	T	.55	1	.49	1	.035	2	1.804	2	.522	1
2018		min		.161	2	.091	2	.03	1	1.709	1	.139	2
2019		max	B	-.073	2	-.147	2	.042	1	-.391	2	.51	1
2020		min		-.462	1	-.547	1	.037	2	-.468	1	.128	2
2021	P506	max	T	.457	1	.429	1	.028	2	1.843	2	.444	1
2022		min		.137	2	.081	2	.014	1	-.702	1	.12	2
2023		max	B	-.06	2	-.127	2	.033	2	2.247	1	.431	1
2024		min		-.398	1	-.457	1	.03	1	-.485	2	.11	2
2025	P507	max	T	.61	1	.564	1	.029	2	1.893	2	.588	1
2026		min		.173	2	.114	2	.023	1	-.524	1	.153	2

Envelope Plate/Shell Principal Stresses (Continued)

	Plate		Sur...	Sigma1 [ksi]	LC	Sigma2 [ksi]	LC	Tau Max [k...	LC	Angle [rad]	LC	Von Mises [ksi]	LC
2027		max	B	-.097	2	-.158	2	.031	2	2.048	1	.573	1
2028		min		-.543	1	-.598	1	.028	1	-.467	2	.138	2
2029	P508	max	T	.556	1	.46	1	.048	1	1.958	2	.515	1
2030		min		.15	2	.105	2	.022	2	-.267	1	.133	2
2031		max	B	-.083	2	-.139	2	.049	1	1.758	1	.499	1
2032		min		-.442	1	-.541	1	.028	2	-.592	2	.121	2
2033	P509	max	T	.405	1	.327	1	.039	1	1.924	2	.372	1
2034		min		.113	2	.072	2	.021	2	-.239	1	.099	2
2035		max	B	-.045	2	-.107	2	.046	1	1.858	1	.358	1
2036		min		-.304	1	-.395	1	.031	2	-.602	2	.093	2
2037	P510	max	T	.36	1	.218	1	.071	1	2.115	2	.314	1
2038		min		.088	2	.061	2	.014	2	-.145	1	.078	2
2039		max	B	-.027	2	-.088	2	.074	1	1.726	1	.3	1
2040		min		-.198	1	-.345	1	.03	2	-.733	2	.078	2
2041	P511	max	T	.508	1	.353	1	.078	1	2.111	2	.451	1
2042		min		.126	2	.094	2	.016	2	-.182	1	.113	2
2043		max	B	-.066	2	-.122	2	.078	1	1.665	1	.435	1
2044		min		-.336	1	-.491	1	.028	2	-.736	2	.105	2
2045	P512	max	T	.463	1	.247	1	.108	1	-.134	1	.401	1
2046		min		.105	2	.081	2	.012	2	-.693	2	.095	2
2047		max	B	-.047	2	-.106	2	.107	1	2.266	2	.385	1
2048		min		-.231	1	-.444	1	.029	2	1.631	1	.092	2
2049	P513	max	T	.318	1	.111	1	.104	1	-.091	1	.28	1
2050		min		.068	2	.047	2	.011	2	-.604	2	.06	2
2051		max	B	-.007	2	-.071	2	.104	1	2.282	2	.266	1
2052		min		-.091	1	-.299	1	.032	2	1.686	1	.068	2
2053	P514	max	T	.279	1	.024	2	.135	1	-.043	1	.275	1
2054		min		.056	2	.008	1	.016	2	-.226	2	.049	2
2055		max	B	.015	2	-.057	2	.134	1	2.185	2	.262	1
2056		min		.011	1	-.257	1	.036	2	1.685	1	.066	2
2057	P515	max	T	.421	1	.145	1	.138	1	-.095	1	.37	1
2058		min		.092	2	.061	2	.015	2	-.324	2	.081	2
2059		max	B	-.026	2	-.092	2	.135	1	2.153	2	.353	1
2060		min		-.129	1	-.4	1	.033	2	1.625	1	.082	2
2061	P516	max	T	.382	1	.051	1	.165	1	-.056	1	.359	1
2062		min		.084	2	.037	2	.023	2	-.128	2	.073	2
2063		max	B	-.005	2	-.08	2	.161	1	2.076	2	.342	1
2064		min		-.035	1	-.358	1	.038	2	1.635	1	.078	2
2065	P517	max	T	.243	1	0	2	.164	1	.01	1	.294	1
2066		min		.049	2	-.084	1	.024	2	-.041	2	.049	2
2067		max	B	.104	1	-.045	2	.161	1	2.127	2	.284	1
2068		min		.037	2	-.217	1	.041	2	1.708	1	.072	2
2069	P518	max	T	.211	1	-.023	2	.187	1	.078	2	.325	1
2070		min		.044	2	-.163	1	.033	2	.072	1	.059	2
2071		max	B	.183	1	-.036	2	.183	1	2.107	2	.317	1
2072		min		.058	2	-.182	1	.047	2	1.751	1	.083	2
2073	P519	max	T	.346	1	.014	2	.189	1	-.013	1	.363	1
2074		min		.078	2	-.032	1	.032	2	-.018	2	.072	2
2075		max	B	.048	1	-.071	2	.183	1	2.034	2	.346	1
2076		min		.016	2	-.319	1	.043	2	1.658	1	.08	2
2077	P520	max	T	.313	1	-.007	2	.207	1	.064	2	.373	1
2078		min		.073	2	-.1	1	.04	2	.035	1	.076	2
2079		max	B	.115	1	-.062	2	.199	1	2.02	2	.355	1
2080		min		.034	2	-.283	1	.048	2	1.693	1	.085	2
2081	P521	max	T	.184	1	-.042	2	.202	1	.18	2	.351	1
2082		min		.04	2	-.221	1	.041	2	.144	1	.071	2
2083		max	B	.242	1	-.029	2	.197	1	2.12	2	.344	1

Envelope Plate/Shell Principal Stresses (Continued)

	Plate		Sur...	Sigma1 [ksi]	LC	Sigma2 [ksi]	LC	Tau Max [k...	LC	Angle [rad]	LC	Von Mises [ksi]	LC
2084		min		.075	2	-.152	1	.052	2	1.811	1	.094	2
2085	P522	max	T	.161	1	-.055	2	.207	1	.283	2	.362	1
2086		min		.038	2	-.253	1	.046	2	.229	1	.08	2
2087		max	B	.276	1	-.025	2	.201	1	2.162	2	.356	1
2088		min		.087	2	-.127	1	.056	2	1.889	1	.102	2
2089	P523	max	T	.283	1	-.023	2	.216	1	.138	2	.38	1
2090		min		.068	2	-.149	1	.046	2	.089	1	.082	2
2091		max	B	.164	1	-.055	2	.207	1	2.03	2	.36	1
2092		min		.049	2	-.249	1	.052	2	1.739	1	.09	2
2093	P524	max	T	.254	1	-.034	2	.214	1	.21	2	.373	1
2094		min		.064	2	-.175	1	.049	2	.15	1	.087	2
2095		max	B	.189	1	-.049	2	.204	1	2.06	2	.353	1
2096		min		.058	2	-.218	1	.053	2	1.795	1	.092	2
2097	P525	max	T	.141	1	-.061	2	.2	1	.394	2	.351	1
2098		min		.035	2	-.258	1	.048	2	.331	1	.085	2
2099		max	B	.282	1	-.022	2	.194	1	2.231	2	.348	1
2100		min		.092	2	-.106	1	.057	2	1.989	1	.104	2
2101	P526	max	T	.124	1	-.061	2	.18	1	.518	2	.316	1
2102		min		.034	2	-.235	1	.047	2	.453	1	.083	2
2103		max	B	.261	1	-.02	2	.176	1	2.326	2	.317	1
2104		min		.09	2	-.091	1	.055	2	2.116	1	.101	2
2105	P527	max	T	.226	1	-.039	2	.201	1	.286	2	.349	1
2106		min		.06	2	-.176	1	.05	2	.217	1	.087	2
2107		max	B	.19	1	-.043	2	.189	1	2.107	2	.327	1
2108		min		.06	2	-.188	1	.052	2	1.862	1	.09	2
2109	P528	max	T	.198	1	-.038	2	.175	1	.366	2	.303	1
2110		min		.055	2	-.151	1	.046	2	.292	1	.081	2
2111		max	B	.166	1	-.037	2	.162	1	2.174	2	.281	1
2112		min		.056	2	-.159	1	.047	2	1.941	1	.082	2
2113	P529	max	T	.107	1	-.052	2	.146	1	.658	2	.257	1
2114		min		.031	2	-.185	1	.041	2	.598	1	.073	2
2115		max	B	.215	1	-.018	2	.147	1	2.274	1	.263	1
2116		min		.08	2	-.078	1	.049	2	-.688	2	.09	2
2117	P530	max	T	.062	1	-.027	2	.074	1	.774	2	.128	1
2118		min		.016	2	-.085	1	.022	2	.69	1	.038	2
2119		max	B	.117	1	-.006	2	.077	1	-.47	2	.139	1
2120		min		.054	2	-.036	1	.03	2	-.685	1	.057	2
2121	P531	max	T	.169	1	-.029	2	.136	1	.441	2	.238	1
2122		min		.048	2	-.103	1	.039	2	.362	1	.067	2
2123		max	B	.117	1	-.03	2	.123	1	2.258	2	.214	1
2124		min		.045	2	-.13	1	.038	2	2.029	1	.066	2
2125	P532	max	T	.138	1	-.01	2	.085	1	.373	2	.157	1
2126		min		.036	2	-.033	1	.023	2	.288	1	.043	2
2127		max	B	.04	1	-.016	2	.066	1	2.316	2	.118	1
2128		min		.021	2	-.092	1	.018	2	1.985	1	.032	2
2129	P533	max	T	.263	1	-.004	2	.139	1	-.067	1	.271	1
2130		min		.079	2	-.015	1	.042	2	-.133	2	.081	2
2131		max	B	.017	1	-.024	2	.105	1	1.452	1	.202	1
2132		min		.011	2	-.193	1	.018	2	1.061	2	.031	2
2133	P534	max	T	.277	1	-.014	2	.165	1	-.121	1	.307	1
2134		min		.083	2	-.053	1	.049	2	-.213	2	.091	2
2135		max	B	.062	1	-.039	2	.138	1	1.354	1	.25	1
2136		min		.031	2	-.213	1	.035	2	1.002	2	.061	2
2137	P535	max	T	.363	1	-.002	2	.186	1	-.008	1	.368	1
2138		min		.103	2	-.009	1	.053	2	-.072	2	.105	2
2139		max	B	.01	1	-.052	2	.157	1	1.542	1	.308	1
2140		min		.005	2	-.303	1	.028	2	1.356	2	.054	2

Envelope Plate/Shell Principal Stresses (Continued)

	Plate		Sur...	Sigma1 [ksi]	LC	Sigma2 [ksi]	LC	Tau Max [k...	LC	Angle [rad]	LC	Von Mises [ksi]	LC
2141	P536	max	T	.373	1	-.008	2	.203	1	-.027	1	.391	1
2142		min		.106	2	-.034	1	.057	2	-.126	2	.11	2
2143		max	B	.037	1	-.062	2	.176	1	1.49	1	.334	1
2144		min		.017	2	-.314	1	.039	2	1.211	2	.071	2
2145	P537	max	T	.307	1	-.021	2	.198	1	-.11	1	.359	1
2146		min		.087	2	-.089	1	.054	2	-.191	2	.099	2
2147		max	B	.102	1	-.05	2	.174	1	1.356	1	.31	1
2148		min		.041	2	-.247	1	.046	2	1.044	2	.079	2
2149	P538	max	T	.339	1	-.022	2	.222	1	-.078	1	.402	1
2150		min		.092	2	-.105	1	.057	2	-.148	2	.105	2
2151		max	B	.121	1	-.059	2	.201	1	1.38	1	.357	1
2152		min		.045	2	-.281	1	.052	2	1.082	2	.09	2
2153	P539	max	T	.398	1	-.012	2	.228	1	-.029	1	.43	1
2154		min		.11	2	-.057	1	.061	2	-.118	2	.116	2
2155		max	B	.063	1	-.072	2	.203	1	1.467	1	.377	1
2156		min		.025	2	-.342	1	.048	2	1.192	2	.087	2
2157	P540	max	T	.428	1	-.011	2	.247	1	-.015	1	.464	1
2158		min		.114	2	-.065	1	.063	2	-.093	2	.12	2
2159		max	B	.074	1	-.081	2	.224	1	1.467	1	.416	1
2160		min		.028	2	-.374	1	.054	2	1.193	2	.098	2
2161	P541	max	T	.372	1	-.018	2	.236	1	-.038	1	.43	1
2162		min		.096	2	-.1	1	.057	2	-.098	2	.106	2
2163		max	B	.116	1	-.067	2	.216	1	1.409	1	.388	1
2164		min		.043	2	-.316	1	.055	2	1.108	2	.096	2
2165	P542	max	T	.406	1	-.009	2	.239	1	.004	1	.446	1
2166		min		.1	2	-.071	1	.055	2	-.044	2	.105	2
2167		max	B	.088	1	-.075	2	.22	1	1.439	1	.403	1
2168		min		.035	2	-.351	1	.055	2	1.123	2	.098	2
2169	P543	max	T	.461	1	-.007	2	.258	1	.009	1	.49	1
2170		min		.118	2	-.055	1	.062	2	-.06	2	.122	2
2171		max	B	.065	1	-.09	2	.237	1	1.477	1	.444	1
2172		min		.025	2	-.408	1	.057	2	1.196	2	.105	2
2173	P544	max	T	.495	1	.003	2	.26	1	.038	1	.508	1
2174		min		.123	2	-.026	1	.06	2	-.021	2	.121	2
2175		max	B	.037	1	-.098	2	.24	1	1.493	1	.462	1
2176		min		.018	2	-.443	1	.058	2	1.196	2	.108	2
2177	P545	max	T	.441	1	.004	2	.232	1	.048	1	.452	1
2178		min		.105	2	-.022	1	.05	2	.013	2	.103	2
2179		max	B	.038	1	-.084	2	.213	1	1.465	1	.408	1
2180		min		.022	2	-.387	1	.053	2	1.122	2	.097	2
2181	P546	max	T	.478	1	.045	1	.216	1	.091	1	.457	1
2182		min		.11	2	.022	2	.044	2	.074	2	.101	2
2183		max	B	.006	2	-.092	2	.197	1	1.486	1	.41	1
2184		min		-.031	1	-.425	1	.049	2	1.105	2	.096	2
2185	P547	max	T	.531	1	.022	1	.254	1	.07	1	.52	1
2186		min		.128	2	.016	2	.056	2	.021	2	.12	2
2187		max	B	.006	2	-.106	2	.234	1	1.509	1	.474	1
2188		min		-.011	1	-.479	1	.056	2	1.187	2	.11	2
2189	P548	max	T	.569	1	.086	1	.241	1	.104	1	.531	1
2190		min		.133	2	.033	2	.05	2	.069	2	.12	2
2191		max	B	-.009	2	-.115	2	.221	1	1.525	1	.484	1
2192		min		-.076	1	-.518	1	.053	2	1.168	2	.111	2
2193	P549	max	T	.518	1	.128	1	.195	1	.146	2	.467	1
2194		min		.116	2	.042	2	.037	2	.135	1	.102	2
2195		max	B	-.013	2	-.102	2	.175	1	1.501	1	.419	1
2196		min		-.115	1	-.464	1	.044	2	1.066	2	.096	2
2197	P550	max	T	.561	1	.222	1	.17	1	.236	2	.49	1

Envelope Plate/Shell Principal Stresses (Continued)

	Plate		Sur...	Sigma1 [ksi]	LC	Sigma2 [ksi]	LC	Tau Max [k...	LC	Angle [rad]	LC	Von Mises [ksi]	LC
2198		min		.124	2	.063	2	.03	2	.182	1	.107	2
2199		max	B	-.034	2	-.112	2	.147	1	1.509	1	.44	1
2200		min		-.212	1	-.506	1	.039	2	1	2	.1	2
2201	P551	max	T	.611	1	.165	1	.223	1	.14	1	.547	1
2202		min		.14	2	.052	2	.044	2	.126	2	.122	2
2203		max	B	-.027	2	-.124	2	.201	1	1.538	1	.499	1
2204		min		-.156	1	-.558	1	.048	2	1.133	2	.113	2
2205	P552	max	T	.656	1	.255	1	.201	1	.197	2	.573	1
2206		min		.147	2	.074	2	.037	2	.179	1	.128	2
2207		max	B	-.048	2	-.134	2	.176	1	1.548	1	.523	1
2208		min		-.249	1	-.601	1	.043	2	1.079	2	.117	2
2209	P553	max	T	.609	1	.323	1	.143	1	.357	2	.528	1
2210		min		.134	2	.085	2	.025	2	.237	1	.117	2
2211		max	B	-.055	2	-.124	2	.116	1	1.507	1	.479	1
2212		min		-.319	1	-.551	1	.035	2	.903	2	.108	2
2213	P554	max	T	.661	1	.43	1	.116	1	.518	2	.581	1
2214		min		.146	2	.105	2	.02	2	.308	1	.131	2
2215		max	B	-.075	2	-.138	2	.083	1	1.493	1	.534	1
2216		min		-.431	1	-.598	1	.032	2	.774	2	.12	2
2217	P555	max	T	.707	1	.355	1	.176	1	.29	2	.612	1
2218		min		.157	2	.095	2	.031	2	.224	1	.137	2
2219		max	B	-.07	2	-.144	2	.147	1	1.557	1	.562	1
2220		min		-.353	1	-.648	1	.037	2	.997	2	.125	2
2221	P556	max	T	.764	1	.461	1	.151	1	.412	2	.666	1
2222		min		.169	2	.117	2	.026	2	.279	1	.15	2
2223		max	B	-.091	2	-.156	2	.116	1	1.565	1	.615	1
2224		min		-.465	1	-.697	1	.032	2	.883	2	.136	2
2225	P557	max	T	.72	1	.536	1	.092	1	.7	2	.648	1
2226		min		.162	2	.123	2	.019	2	.409	1	.146	2
2227		max	B	-.093	2	-.154	2	.05	1	1.457	1	.603	1
2228		min		-.547	1	-.647	1	.031	2	.625	2	.134	2
2229	P558	max	T	.788	1	.639	1	.075	1	.852	2	.725	1
2230		min		.179	2	.139	2	.02	2	.555	1	.163	2
2231		max	B	-.109	2	-.171	2	.031	2	1.314	1	.682	1
2232		min		-.664	1	-.699	1	.018	1	.475	2	.15	2
2233	P559	max	T	.828	1	.57	1	.129	1	.554	2	.734	1
2234		min		.184	2	.136	2	.024	2	.35	1	.166	2
2235		max	B	-.112	2	-.17	2	.084	1	1.583	1	.682	1
2236		min		-.583	1	-.75	1	.029	2	.733	2	.149	2
2237	P560	max	T	.901	1	.677	1	.112	1	.681	2	.813	1
2238		min		.203	2	.153	2	.025	2	.442	1	.183	2
2239		max	B	-.13	2	-.185	2	.052	1	1.64	1	.761	1
2240		min		-.704	1	-.808	1	.027	2	.554	2	.164	2
2241	P561	max	T	.866	1	.731	1	.067	1	.947	2	.807	1
2242		min		.198	2	.154	2	.022	2	.736	1	.18	2
2243		max	B	-.123	2	-.189	2	.033	2	.335	2	.767	1
2244		min		-.75	1	-.782	1	.016	1	.126	1	.166	2
2245	P562	max	T	.951	1	.813	1	.069	1	1.006	2	.89	1
2246		min		.214	2	.17	2	.022	2	.899	1	.196	2
2247		max	B	-.135	2	-.208	2	.044	1	.228	2	.852	1
2248		min		-.805	1	-.893	1	.037	2	-.034	1	.183	2
2249	P563	max	T	.984	1	.78	1	.102	1	.76	2	.9	1
2250		min		.222	2	.17	2	.026	2	.547	1	.201	2
2251		max	B	-.146	2	-.203	2	.028	2	1.872	1	.848	1
2252		min		-.82	1	-.874	1	.027	1	.383	2	.181	2
2253	P564	max	T	1.076	1	.875	1	.101	1	.788	2	.991	1
2254		min		.241	2	.186	2	.027	2	.642	1	.219	2

Envelope Plate/Shell Principal Stresses (Continued)

	Plate		Sur...	Sigma1 [ksi]	LC	Sigma2 [ksi]	LC	Tau Max [k...	LC	Angle [rad]	LC	Von Mises [ksi]	LC
2255		max	B	-.16	2	-.221	2	.03	2	.224	2	.94	1
2256		min		-.912	1	-.966	1	.027	1	-.725	1	.197	2
2257	P565	max	T	1.038	1	.886	1	.076	1	1.034	2	.971	1
2258		min		.229	2	.185	2	.022	2	1.007	1	.21	2
2259		max	B	-.146	2	-.224	2	.067	1	.133	2	.935	1
2260		min		-.861	1	-.995	1	.039	2	-.093	1	.197	2
2261	P566	max	T	1.116	1	.954	1	.081	1	1.066	1	1.044	1
2262		min		.24	2	.201	2	.02	2	1.05	2	.223	2
2263		max	B	-.157	2	-.239	2	.085	1	.053	2	1.01	1
2264		min		-.915	1	-1.084	1	.041	2	-.138	1	.21	2
2265	P567	max	T	1.171	1	.963	1	.104	1	.772	2	1.082	1
2266		min		.258	2	.202	2	.028	2	.699	1	.235	2
2267		max	B	-.173	2	-.238	2	.046	1	.087	2	1.032	1
2268		min		-.982	1	-1.075	1	.032	2	-.547	1	.213	2
2269	P568	max	T	1.26	1	1.046	1	.107	1	.713	2	1.168	1
2270		min		.271	2	.219	2	.026	2	.711	1	.249	2
2271		max	B	-.185	2	-.252	2	.064	1	-.032	2	1.118	1
2272		min		-1.049	1	-1.176	1	.034	2	-.542	1	.227	2
2273	P569	max	T	1.179	1	1.016	1	.081	1	1.096	1	1.106	1
2274		min		.247	2	.217	2	.015	2	1.079	2	.233	2
2275		max	B	-.167	2	-.25	2	.095	1	-.014	2	1.074	1
2276		min		-.966	1	-1.157	1	.042	2	-.178	1	.22	2
2277	P570	max	T	1.222	1	1.071	1	.076	1	1.191	2	1.154	1
2278		min		.251	2	.232	2	.01	2	1.117	1	.242	2
2279		max	B	-.176	2	-.258	2	.098	1	-.067	2	1.123	1
2280		min		-1.012	1	-1.209	1	.041	2	-.211	1	.228	2
2281	P571	max	T	1.335	1	1.121	1	.107	1	.677	1	1.242	1
2282		min		.281	2	.235	2	.023	2	.601	2	.261	2
2283		max	B	-.197	2	-.264	2	.074	1	-.138	2	1.193	1
2284		min		-1.112	1	-1.26	1	.033	2	-.598	1	.238	2
2285	P572	max	T	1.389	1	1.187	1	.101	1	.599	1	1.3	1
2286		min		.288	2	.25	2	.019	2	.407	2	.271	2
2287		max	B	-.209	2	-.271	2	.076	1	-.229	2	1.252	1
2288		min		-1.169	1	-1.321	1	.031	2	-.687	1	.246	2
2289	P573	max	T	1.243	1	1.114	1	.065	1	1.672	2	1.184	1
2290		min		.254	2	.242	2	.006	2	1.15	1	.248	2
2291		max	B	-.184	2	-.262	2	.095	1	-.103	2	1.154	1
2292		min		-1.048	1	-1.238	1	.039	2	-.232	1	.233	2
2293	P574	max	T	1.242	1	1.14	1	.051	1	2.033	2	1.194	1
2294		min		.263	2	.24	2	.012	2	1.224	1	.252	2
2295		max	B	-.189	2	-.263	2	.087	1	-.129	2	1.166	1
2296		min		-1.069	1	-1.243	1	.037	2	-.237	1	.235	2
2297	P575	max	T	1.417	1	1.238	1	.09	1	.47	1	1.336	1
2298		min		.293	2	.26	2	.016	2	.082	2	.278	2
2299		max	B	-.22	2	-.274	2	.069	1	2.332	1	1.291	1
2300		min		-1.216	1	-1.354	1	.027	2	-.301	2	.251	2
2301	P576	max	T	1.419	1	1.267	1	.076	1	.282	1	1.35	1
2302		min		.3	2	.262	2	.019	2	-.281	2	.283	2
2303		max	B	-.23	2	-.273	2	.055	1	2.171	1	1.306	1
2304		min		-1.247	1	-1.358	1	.021	2	-.331	2	.254	2
2305	P577	max	T	1.223	1	1.143	1	.04	1	2.108	2	1.185	1
2306		min		.273	2	.231	2	.021	2	1.376	1	.255	2
2307		max	B	-.192	2	-.262	2	.077	1	-.124	2	1.158	1
2308		min		-1.073	1	-1.228	1	.035	2	-.223	1	.235	2
2309	P578	max	T	1.193	1	1.119	1	.037	1	2.097	2	1.158	1
2310		min		.278	2	.22	2	.029	2	1.584	1	.254	2
2311		max	B	-.191	2	-.259	2	.068	1	-.121	2	1.131	1

Envelope Plate/Shell Principal Stresses (Continued)

	Plate		Sur...	Sigma1 [ksi]	LC	Sigma2 [ksi]	LC	Tau Max [k...	LC	Angle [rad]	LC	Von Mises [ksi]	LC
2312		min		-1.057	1	-1.193	1	.034	2	-.197	1	.232	2
2313	P579	max	T	1.399	1	1.267	1	.066	1	.035	1	1.338	1
2314		min		.308	2	.255	2	.026	2	-.537	2	.285	2
2315		max	B	-.236	2	-.269	2	.04	1	1.947	1	1.296	1
2316		min		-1.254	1	-1.334	1	.017	2	-.286	2	.254	2
2317	P580	max	T	1.362	1	1.235	1	.064	1	-.223	1	1.303	1
2318		min		.312	2	.244	2	.034	2	-.707	2	.285	2
2319		max	B	-.235	2	-.265	2	.029	1	1.643	1	1.263	1
2320		min		-1.233	1	-1.292	1	.015	2	-.167	2	.251	2
2321	P581	max	T	1.15	1	1.072	1	.039	1	2.066	2	1.113	1
2322		min		.279	2	.208	2	.036	2	1.751	1	.251	2
2323		max	B	-.187	2	-.253	2	.059	1	-.124	2	1.088	1
2324		min		-1.024	1	-1.142	1	.033	2	-.173	1	.228	2
2325	P582	max	T	1.092	1	1.012	1	.04	1	2.031	2	1.054	1
2326		min		.274	2	.195	2	.04	2	1.861	1	.245	2
2327		max	B	-.18	2	-.245	2	.049	1	-.144	2	1.03	1
2328		min		-.977	1	-1.075	1	.033	2	-.168	1	.22	2
2329	P583	max	T	1.309	1	1.176	1	.066	1	2.311	2	1.248	1
2330		min		.312	2	.232	2	.04	2	-.419	1	.28	2
2331		max	B	-.229	2	-.261	2	.027	1	1.352	1	1.21	1
2332		min		-1.182	1	-1.237	1	.016	2	-.079	2	.246	2
2333	P584	max	T	1.239	1	1.101	1	.069	1	2.218	2	1.176	1
2334		min		.305	2	.218	2	.043	2	-.532	1	.272	2
2335		max	B	-.219	2	-.254	2	.029	1	1.208	1	1.142	1
2336		min		-1.112	1	-1.169	1	.018	2	-.074	2	.239	2
2337	P585	max	T	1.019	1	.944	1	.041	2	1.998	2	.984	1
2338		min		.265	2	.182	2	.038	1	1.965	1	.235	2
2339		max	B	-.171	2	-.235	2	.036	1	-.184	2	.96	1
2340		min		-.922	1	-.994	1	.032	2	-.202	1	.21	2
2341	P586	max	T	.937	1	.871	1	.04	2	2.131	1	.906	1
2342		min		.251	2	.17	2	.033	1	1.973	2	.222	2
2343		max	B	-.161	2	-.221	2	.03	2	-.245	2	.884	1
2344		min		-.862	1	-.904	1	.021	1	-.341	1	.198	2
2345	P587	max	T	1.156	1	1.016	1	.07	1	2.148	2	1.093	1
2346		min		.293	2	.205	2	.044	2	-.568	1	.26	2
2347		max	B	-.207	2	-.245	2	.031	1	1.22	1	1.062	1
2348		min		-1.029	1	-1.092	1	.019	2	-.131	2	.228	2
2349	P588	max	T	1.067	1	.925	1	.071	1	2.1	2	1.003	1
2350		min		.275	2	.192	2	.041	2	-.538	1	.245	2
2351		max	B	-.194	2	-.232	2	.038	1	1.316	1	.975	1
2352		min		-.935	1	-1.011	1	.019	2	-.23	2	.215	2
2353	P589	max	T	.853	1	.79	1	.037	2	1.96	2	.824	1
2354		min		.232	2	.158	2	.032	1	-.733	1	.206	2
2355		max	B	-.149	2	-.206	2	.028	2	2.155	1	.803	1
2356		min		-.79	1	-.815	1	.013	1	-.328	2	.184	2
2357	P590	max	T	.779	1	.696	1	.042	1	1.966	2	.741	1
2358		min		.211	2	.148	2	.032	2	-.461	1	.188	2
2359		max	B	-.136	2	-.188	2	.031	1	1.731	1	.722	1
2360		min		-.689	1	-.751	1	.026	2	-.439	2	.168	2
2361	P591	max	T	.978	1	.828	1	.075	1	2.073	2	.912	1
2362		min		.254	2	.181	2	.037	2	-.461	1	.226	2
2363		max	B	-.179	2	-.217	2	.051	1	1.411	1	.887	1
2364		min		-.831	1	-.933	1	.019	2	-.367	2	.201	2
2365	P592	max	T	.895	1	.724	1	.085	1	2.078	2	.823	1
2366		min		.23	2	.169	2	.03	2	-.366	1	.207	2
2367		max	B	-.163	2	-.201	2	.07	1	1.469	1	.801	1
2368		min		-.721	1	-.862	1	.019	2	-.541	2	.185	2

Envelope Plate/Shell Principal Stresses (Continued)

	Plate		Sur...	Sigma1 [ksi]	LC	Sigma2 [ksi]	LC	Tau Max [k...	LC	Angle [rad]	LC	Von Mises [ksi]	LC
2369	P593	max	T	.716	1	.592	1	.062	1	2.006	2	.662	1
2370		min		.188	2	.137	2	.025	2	-.305	1	.168	2
2371		max	B	-.122	2	-.171	2	.056	1	1.633	1	.644	1
2372		min		-.581	1	-.693	1	.025	2	-.578	2	.152	2
2373	P594	max	T	.658	1	.484	1	.087	1	2.115	2	.591	1
2374		min		.164	2	.127	2	.019	2	-.223	1	.149	2
2375		max	B	-.105	2	-.154	2	.084	1	1.596	1	.574	1
2376		min		-.471	1	-.639	1	.025	2	-.736	2	.136	2
2377	P595	max	T	.821	1	.616	1	.102	1	2.131	2	.741	1
2378		min		.204	2	.159	2	.023	2	-.285	1	.186	2
2379		max	B	-.145	2	-.186	2	.093	1	1.498	1	.721	1
2380		min		-.609	1	-.796	1	.021	2	-.731	2	.169	2
2381	P596	max	T	.756	1	.508	1	.124	1	2.302	2	.668	1
2382		min		.18	2	.147	2	.017	2	-.225	1	.166	2
2383		max	B	-.125	2	-.171	2	.119	1	2.242	2	.65	1
2384		min		-.498	1	-.735	1	.023	2	1.513	1	.153	2
2385	P597	max	T	.606	1	.378	1	.114	1	-.173	1	.53	1
2386		min		.142	2	.114	2	.014	2	-.771	2	.13	2
2387		max	B	-.086	2	-.139	2	.112	1	2.253	2	.514	1
2388		min		-.364	1	-.588	1	.027	2	1.579	1	.121	2
2389	P598	max	T	.559	1	.275	1	.142	1	-.136	1	.484	1
2390		min		.126	2	.096	2	.015	2	-.414	2	.114	2
2391		max	B	-.065	2	-.126	2	.139	1	2.129	2	.467	1
2392		min		-.261	1	-.539	1	.031	2	1.576	1	.109	2
2393	P599	max	T	.698	1	.402	1	.148	1	-.181	1	.607	1
2394		min		.161	2	.131	2	.015	2	-.528	2	.148	2
2395		max	B	-.103	2	-.159	2	.144	1	2.11	2	.59	1
2396		min		-.391	1	-.679	1	.028	2	1.523	1	.139	2
2397	P600	max	T	.647	1	.301	1	.173	1	-.146	1	.56	1
2398		min		.148	2	.109	2	.02	2	-.259	2	.133	2
2399		max	B	-.08	2	-.147	2	.169	1	2.016	2	.544	1
2400		min		-.289	1	-.627	1	.034	2	1.533	1	.128	2
2401	P601	max	T	.515	1	.178	1	.169	1	-.103	1	.453	1
2402		min		.116	2	.073	2	.022	2	-.191	2	.102	2
2403		max	B	-.043	2	-.114	2	.165	1	2.041	2	.436	1
2404		min		-.164	1	-.494	1	.036	2	1.582	1	.1	2
2405	P602	max	T	.475	1	.089	1	.193	1	-.07	1	.437	1
2406		min		.11	2	.049	2	.03	2	-.076	2	.095	2
2407		max	B	-.022	2	-.104	2	.187	1	1.985	2	.418	1
2408		min		-.077	1	-.451	1	.041	2	1.596	1	.095	2
2409	P603	max	T	.6	1	.207	1	.196	1	-.116	1	.528	1
2410		min		.14	2	.084	2	.028	2	-.12	2	.122	2
2411		max	B	-.058	2	-.137	2	.191	1	1.953	2	.51	1
2412		min		-.196	1	-.579	1	.04	2	1.546	1	.119	2
2413	P604	max	T	.558	1	.123	1	.217	1	-.044	2	.507	1
2414		min		.134	2	.06	2	.037	2	-.087	1	.116	2
2415		max	B	-.036	2	-.128	2	.211	1	1.911	2	.488	1
2416		min		-.113	1	-.535	1	.046	2	1.561	1	.114	2
2417	P605	max	T	.438	1	.027	2	.212	1	-.003	2	.432	1
2418		min		.104	2	.013	1	.039	2	-.035	1	.093	2
2419		max	B	0	1	-.095	2	.205	1	1.953	2	.411	1
2420		min		-.002	2	-.411	1	.047	2	1.617	1	.094	2
2421	P606	max	T	.404	1	.007	2	.226	1	.054	2	.43	1
2422		min		.099	2	-.048	1	.046	2	.002	1	.096	2
2423		max	B	.06	1	-.087	2	.217	1	1.941	2	.407	1
2424		min		.015	2	-.374	1	.051	2	1.644	1	.095	2
2425	P607	max	T	.519	1	.051	1	.234	1	.007	2	.495	1

Envelope Plate/Shell Principal Stresses (Continued)

	Plate		Sur...	Sigma1 [ksi]	LC	Sigma2 [ksi]	LC	Tau Max [k...	LC	Angle [rad]	LC	Von Mises [ksi]	LC
2426		min		.128	2	.038	2	.045	2	-.057	1	.114	2
2427		max	B	-.017	2	-.119	2	.226	1	1.886	2	.474	1
2428		min		-.042	1	-.494	1	.051	2	1.58	1	.112	2
2429	P608	max	T	.483	1	.019	2	.245	1	.047	2	.487	1
2430		min		.123	2	-.006	1	.052	2	-.028	1	.115	2
2431		max	B	.015	1	-.111	2	.235	1	1.873	2	.462	1
2432		min		-.001	2	-.455	1	.055	2	1.6	1	.111	2
2433	P609	max	T	.371	1	-.008	2	.232	1	.105	2	.425	1
2434		min		.094	2	-.092	1	.051	2	.042	1	.099	2
2435		max	B	.103	1	-.08	2	.221	1	1.944	2	.4	1
2436		min		.027	2	-.338	1	.053	2	1.676	1	.096	2
2437	P610	max	T	.34	1	-.019	2	.228	1	.154	2	.41	1
2438		min		.09	2	-.116	1	.054	2	.083	1	.1	2
2439		max	B	.125	1	-.072	2	.215	1	1.958	2	.383	1
2440		min		.035	2	-.304	1	.054	2	1.712	1	.095	2
2441	P611	max	T	.45	1	.004	2	.249	1	.082	2	.476	1
2442		min		.118	2	-.048	1	.057	2	.002	1	.116	2
2443		max	B	.055	1	-.104	2	.237	1	1.869	2	.449	1
2444		min		.011	2	-.419	1	.057	2	1.624	1	.109	2
2445	P612	max	T	.419	1	-.006	2	.245	1	.114	2	.459	1
2446		min		.113	2	-.072	1	.06	2	.03	1	.117	2
2447		max	B	.077	1	-.096	2	.231	1	1.87	2	.428	1
2448		min		.018	2	-.384	1	.057	2	1.646	1	.107	2
2449	P613	max	T	.31	1	-.024	2	.214	1	.201	2	.382	1
2450		min		.084	2	-.118	1	.054	2	.124	1	.098	2
2451		max	B	.126	1	-.065	2	.198	1	1.979	2	.351	1
2452		min		.037	2	-.271	1	.051	2	1.75	1	.09	2
2453	P614	max	T	.279	1	-.023	2	.189	1	.242	2	.339	1
2454		min		.078	2	-.098	1	.05	2	.159	1	.092	2
2455		max	B	.105	1	-.058	2	.172	1	2.005	2	.305	1
2456		min		.034	2	-.238	1	.046	2	1.785	1	.08	2
2457	P615	max	T	.388	1	-.012	2	.233	1	.14	2	.432	1
2458		min		.108	2	-.077	1	.06	2	.054	1	.114	2
2459		max	B	.082	1	-.089	2	.216	1	1.871	2	.398	1
2460		min		.021	2	-.351	1	.055	2	1.665	1	.101	2
2461	P616	max	T	.36	1	-.013	2	.212	1	.159	2	.396	1
2462		min		.102	2	-.065	1	.057	2	.069	1	.109	2
2463		max	B	.068	1	-.081	2	.194	1	1.867	2	.358	1
2464		min		.019	2	-.32	1	.05	2	1.675	1	.093	2
2465	P617	max	T	.25	1	-.016	2	.155	1	.264	2	.285	1
2466		min		.071	2	-.06	1	.044	2	.176	1	.08	2
2467		max	B	.065	1	-.05	2	.136	1	2.018	2	.246	1
2468		min		.024	2	-.207	1	.037	2	1.802	1	.065	2
2469	P618	max	T	.234	1	-.005	2	.125	1	.17	2	.243	1
2470		min		.064	2	-.017	1	.034	2	.104	1	.066	2
2471		max	B	.018	1	-.039	2	.102	1	1.882	2	.197	1
2472		min		.007	2	-.187	1	.023	2	1.711	1	.043	2
2473	P619	max	T	.335	1	-.009	2	.186	1	.158	2	.355	1
2474		min		.096	2	-.038	1	.052	2	.066	1	.101	2
2475		max	B	.04	1	-.074	2	.166	1	1.84	2	.314	1
2476		min		.013	2	-.292	1	.043	2	1.665	1	.081	2
2477	P620	max	T	.325	1	-.003	2	.168	1	.089	2	.33	1
2478		min		.091	2	-.011	1	.047	2	.03	1	.092	2
2479		max	B	.011	1	-.069	2	.146	1	1.714	2	.287	1
2480		min		.003	2	-.281	1	.036	2	1.613	1	.071	2
2481	P621	max	T	.449	1	-.001	2	.228	1	.02	1	.452	1
2482		min		.125	2	-.007	1	.063	2	-.042	2	.126	2

Envelope Plate/Shell Principal Stresses (Continued)

	Plate		Sur...	Sigma1 [ksi]	LC	Sigma2 [ksi]	LC	Tau Max [k...	LC	Angle [rad]	LC	Von Mises [ksi]	LC
2483		max	B	.007	1	-.08	2	.204	1	1.579	1	.404	1
2484		min		.002	2	-.401	1	.041	2	1.458	2	.081	2
2485	P622	max	T	.458	1	-.004	2	.24	1	.024	1	.47	1
2486		min		.127	2	-.023	1	.065	2	-.075	2	.129	2
2487		max	B	.023	1	-.086	2	.216	1	1.559	1	.421	1
2488		min		.009	2	-.408	1	.048	2	1.341	2	.091	2
2489	P623	max	T	.521	1	0	2	.263	1	.035	1	.523	1
2490		min		.144	2	-.005	1	.072	2	-.025	2	.144	2
2491		max	B	.005	1	-.106	2	.244	1	1.597	1	.486	1
2492		min		0	2	-.484	1	.053	2	1.501	2	.106	2
2493	P624	max	T	.531	1	-.002	2	.273	1	.053	1	.538	1
2494		min		.145	2	-.015	1	.074	2	-.046	2	.146	2
2495		max	B	.015	1	-.11	2	.253	1	1.597	1	.498	1
2496		min		.005	2	-.49	1	.058	2	1.415	2	.113	2
2497	P625	max	T	.48	1	-.005	2	.258	1	.021	1	.499	1
2498		min		.13	2	-.035	1	.068	2	-.073	2	.133	2
2499		max	B	.038	1	-.095	2	.235	1	1.536	1	.451	1
2500		min		.014	2	-.431	1	.054	2	1.299	2	.102	2
2501	P626	max	T	.508	1	-.003	2	.272	1	.028	1	.527	1
2502		min		.134	2	-.036	1	.069	2	-.057	2	.136	2
2503		max	B	.041	1	-.103	2	.25	1	1.527	1	.481	1
2504		min		.015	2	-.459	1	.059	2	1.28	2	.111	2
2505	P627	max	T	.551	1	0	2	.285	1	.053	1	.561	1
2506		min		.149	2	-.02	1	.075	2	-.044	2	.149	2
2507		max	B	.021	1	-.117	2	.265	1	1.579	1	.52	1
2508		min		.007	2	-.509	1	.062	2	1.371	2	.121	2
2509	P628	max	T	.576	1	.003	2	.295	1	.058	1	.583	1
2510		min		.152	2	-.014	1	.075	2	-.033	2	.151	2
2511		max	B	.016	1	-.124	2	.275	1	1.568	1	.542	1
2512		min		.007	2	-.534	1	.066	2	1.343	2	.128	2
2513	P629	max	T	.539	1	.003	2	.28	1	.043	1	.549	1
2514		min		.139	2	-.021	1	.068	2	-.034	2	.137	2
2515		max	B	.027	1	-.111	2	.259	1	1.528	1	.505	1
2516		min		.012	2	-.491	1	.062	2	1.268	2	.118	2
2517	P630	max	T	.572	1	.012	2	.281	1	.064	1	.567	1
2518		min		.143	2	.011	1	.065	2	-.005	2	.137	2
2519		max	B	.005	2	-.12	2	.261	1	1.536	1	.523	1
2520		min		-.003	1	-.525	1	.062	2	1.257	2	.122	2
2521	P631	max	T	.605	1	.01	2	.3	1	.069	1	.602	1
2522		min		.157	2	.006	1	.073	2	-.015	2	.152	2
2523		max	B	.002	2	-.132	2	.281	1	1.566	1	.562	1
2524		min		-.002	1	-.563	1	.067	2	1.324	2	.133	2
2525	P632	max	T	.638	1	.039	1	.299	1	.087	1	.62	1
2526		min		.161	2	.02	2	.071	2	.006	2	.152	2
2527		max	B	-.006	2	-.14	2	.28	1	1.57	1	.579	1
2528		min		-.035	1	-.595	1	.067	2	1.306	2	.138	2
2529	P633	max	T	.609	1	.058	1	.275	1	.09	1	.582	1
2530		min		.148	2	.026	2	.061	2	.028	2	.137	2
2531		max	B	-.007	2	-.128	2	.255	1	1.546	1	.537	1
2532		min		-.05	1	-.561	1	.061	2	1.242	2	.125	2
2533	P634	max	T	.649	1	.121	1	.264	1	.118	1	.597	1
2534		min		.154	2	.043	2	.056	2	.067	2	.138	2
2535		max	B	-.022	2	-.137	2	.243	1	1.558	1	.552	1
2536		min		-.114	1	-.6	1	.057	2	1.221	2	.127	2
2537	P635	max	T	.675	1	.088	1	.294	1	.108	1	.636	1
2538		min		.167	2	.034	2	.066	2	.033	2	.153	2
2539		max	B	-.017	2	-.148	2	.274	1	1.578	1	.594	1

Envelope Plate/Shell Principal Stresses (Continued)

	Plate		Sur...	Sigma1 [ksi]	LC	Sigma2 [ksi]	LC	Tau Max [k...	LC	Angle [rad]	LC	Von Mises [ksi]	LC
2540		min		-.083	1	-.631	1	.066	2	1.287	2	.141	2
2541	P636	max	T	.716	1	.15	1	.283	1	.133	1	.654	1
2542		min		.173	2	.051	2	.061	2	.065	2	.154	2
2543		max	B	-.032	2	-.157	2	.263	1	1.588	1	.611	1
2544		min		-.145	1	-.67	1	.062	2	1.264	2	.143	2
2545	P637	max	T	.692	1	.197	1	.248	1	.149	1	.618	1
2546		min		.161	2	.062	2	.049	2	.113	2	.14	2
2547		max	B	-.04	2	-.145	2	.225	1	1.57	1	.57	1
2548		min		-.191	1	-.641	1	.053	2	1.188	2	.13	2
2549	P638	max	T	.741	1	.286	1	.228	1	.184	1	.647	1
2550		min		.169	2	.084	2	.043	2	.173	2	.146	2
2551		max	B	-.061	2	-.154	2	.202	1	1.583	1	.598	1
2552		min		-.282	1	-.686	1	.047	2	1.141	2	.135	2
2553	P639	max	T	.762	1	.225	1	.268	1	.162	1	.678	1
2554		min		.18	2	.071	2	.054	2	.105	2	.157	2
2555		max	B	-.051	2	-.165	2	.246	1	1.6	1	.632	1
2556		min		-.222	1	-.713	1	.057	2	1.233	2	.147	2
2557	P640	max	T	.814	1	.313	1	.251	1	.196	1	.711	1
2558		min		.188	2	.093	2	.048	2	.158	2	.163	2
2559		max	B	-.072	2	-.174	2	.224	1	1.615	1	.662	1
2560		min		-.312	1	-.76	1	.051	2	1.19	2	.152	2
2561	P641	max	T	.796	1	.384	1	.206	1	.252	2	.689	1
2562		min		.179	2	.106	2	.037	2	.225	1	.156	2
2563		max	B	-.083	2	-.164	2	.175	1	1.597	1	.637	1
2564		min		-.385	1	-.735	1	.041	2	1.072	2	.142	2
2565	P642	max	T	.858	1	.49	1	.184	1	.358	2	.746	1
2566		min		.192	2	.128	2	.032	2	.275	1	.169	2
2567		max	B	-.106	2	-.175	2	.146	1	1.617	1	.691	1
2568		min		-.497	1	-.789	1	.034	2	.974	2	.152	2
2569	P643	max	T	.873	1	.41	1	.231	1	.236	1	.756	1
2570		min		.199	2	.116	2	.042	2	.23	2	.173	2
2571		max	B	-.095	2	-.184	2	.199	1	1.634	1	.703	1
2572		min		-.414	1	-.812	1	.044	2	1.13	2	.159	2
2573	P644	max	T	.941	1	.516	1	.213	1	.33	2	.816	1
2574		min		.212	2	.139	2	.037	2	.286	1	.187	2
2575		max	B	-.12	2	-.194	2	.171	1	1.663	1	.759	1
2576		min		-.527	1	-.87	1	.037	2	1.044	2	.169	2
2577	P645	max	T	.93	1	.6	1	.165	1	.481	2	.817	1
2578		min		.208	2	.148	2	.03	2	.337	1	.185	2
2579		max	B	-.129	2	-.187	2	.116	1	1.655	1	.759	1
2580		min		-.617	1	-.848	1	.029	2	.834	2	.166	2
2581	P646	max	T	1.014	1	.711	1	.152	1	.592	2	.901	1
2582		min		.227	2	.166	2	.031	2	.413	1	.204	2
2583		max	B	-.151	2	-.2	2	.088	1	1.735	1	.841	1
2584		min		-.74	1	-.915	1	.025	2	.644	2	.181	2
2585	P647	max	T	1.022	1	.628	1	.197	1	.455	2	.893	1
2586		min		.23	2	.159	2	.035	2	.349	1	.204	2
2587		max	B	-.146	2	-.204	2	.143	1	1.714	1	.83	1
2588		min		-.649	1	-.936	1	.029	2	.919	2	.182	2
2589	P648	max	T	1.119	1	.741	1	.189	1	.562	2	.986	1
2590		min		.252	2	.178	2	.037	2	.423	1	.225	2
2591		max	B	-.17	2	-.217	2	.119	1	1.807	1	.918	1
2592		min		-.775	1	-1.014	1	.023	2	.717	2	.198	2
2593	P649	max	T	1.112	1	.818	1	.147	1	.661	2	.998	1
2594		min		.25	2	.183	2	.033	2	.493	1	.224	2
2595		max	B	-.17	2	-.217	2	.068	1	1.897	1	.935	1
2596		min		-.859	1	-.996	1	.024	2	.415	2	.197	2

Envelope Plate/Shell Principal Stresses (Continued)

	Plate		Sur...	Sigma1 [ksi]	LC	Sigma2 [ksi]	LC	Tau Max [k...	LC	Angle [rad]	LC	Von Mises [ksi]	LC
2597	P650	max	T	1.222	1	.919	1	.152	1	.678	2	1.103	1
2598		min		.273	2	.199	2	.037	2	.558	1	.244	2
2599		max	B	-.186	2	-.235	2	.068	1	2.117	1	1.037	1
2600		min		-.963	1	-1.099	1	.025	2	.184	2	.215	2
2601	P651	max	T	1.236	1	.851	1	.192	1	.632	2	1.095	1
2602		min		.279	2	.195	2	.042	2	.499	1	.248	2
2603		max	B	-.192	2	-.233	2	.107	1	1.957	1	1.021	1
2604		min		-.897	1	-1.111	1	.02	2	.421	2	.215	2
2605	P652	max	T	1.375	1	.955	1	.21	1	.649	2	1.221	1
2606		min		.308	2	.209	2	.049	2	.557	1	.272	2
2607		max	B	-.21	2	-.253	2	.118	1	2.119	1	1.141	1
2608		min		-1.004	1	-1.24	1	.022	2	.087	2	.235	2
2609	P653	max	T	1.343	1	1.014	1	.165	1	.648	2	1.212	1
2610		min		.295	2	.214	2	.041	2	.588	1	.264	2
2611		max	B	-.2	2	-.254	2	.087	1	2.249	1	1.145	1
2612		min		-1.049	1	-1.222	1	.027	2	-.024	2	.232	2
2613	P654	max	T	1.461	1	1.1	1	.18	1	.571	2	1.318	1
2614		min		.315	2	.229	2	.043	2	.57	1	.282	2
2615		max	B	-.212	2	-.272	2	.111	1	2.258	1	1.249	1
2616		min		-1.123	1	-1.345	1	.03	2	-.207	2	.247	2
2617	P655	max	T	1.529	1	1.051	1	.239	1	.618	2	1.355	1
2618		min		.337	2	.223	2	.057	2	.579	1	.297	2
2619		max	B	-.222	2	-.278	2	.151	1	2.205	1	1.269	1
2620		min		-1.091	1	-1.393	1	.028	2	-.184	2	.254	2
2621	P656	max	T	1.707	1	1.14	1	.284	1	.561	1	1.506	1
2622		min		.367	2	.236	2	.066	2	.549	2	.322	2
2623		max	B	-.232	2	-.305	2	.204	1	2.208	1	1.416	1
2624		min		-1.167	1	-1.575	1	.037	2	-.417	2	.276	2
2625	P657	max	T	1.568	1	1.18	1	.194	1	.514	1	1.415	1
2626		min		.331	2	.244	2	.044	2	.456	2	.297	2
2627		max	B	-.224	2	-.287	2	.135	1	2.205	1	1.346	1
2628		min		-1.191	1	-1.46	1	.031	2	-.379	2	.261	2
2629	P658	max	T	1.656	1	1.243	1	.207	1	.42	1	1.493	1
2630		min		.344	2	.255	2	.045	2	.301	2	.31	2
2631		max	B	-.236	2	-.297	2	.155	1	2.1	1	1.425	1
2632		min		-1.244	1	-1.554	1	.031	2	-.563	2	.271	2
2633	P659	max	T	1.86	1	1.204	1	.328	1	.479	1	1.634	1
2634		min		.392	2	.245	2	.074	2	.429	2	.343	2
2635		max	B	-.239	2	-.324	2	.255	1	2.119	1	1.54	1
2636		min		-1.22	1	-1.731	1	.043	2	-.631	2	.291	2
2637	P660	max	T	1.997	1	1.276	1	.36	1	.381	1	1.752	1
2638		min		.413	2	.256	2	.078	2	.289	2	.361	2
2639		max	B	-.247	2	-.344	2	.297	1	2.328	2	1.66	1
2640		min		-1.281	1	-1.875	1	.049	2	2.019	1	.307	2
2641	P661	max	T	1.716	1	1.287	1	.214	1	.29	1	1.547	1
2642		min		.355	2	.263	2	.046	2	.11	2	.319	2
2643		max	B	-.247	2	-.302	2	.169	1	1.957	1	1.481	1
2644		min		-1.283	1	-1.62	1	.027	2	-.763	2	.278	2
2645	P662	max	T	1.738	1	1.306	1	.216	1	.13	1	1.567	1
2646		min		.363	2	.266	2	.049	2	-.104	2	.325	2
2647		max	B	-.257	2	-.301	2	.174	1	2.148	2	1.504	1
2648		min		-1.3	1	-1.647	1	.022	2	1.786	1	.282	2
2649	P663	max	T	2.111	1	1.305	1	.403	1	.259	1	1.845	1
2650		min		.431	2	.26	2	.085	2	.137	2	.376	2
2651		max	B	-.25	2	-.36	2	.349	1	2.116	2	1.756	1
2652		min		-1.301	1	-1.998	1	.055	2	1.888	1	.319	2
2653	P664	max	T	2.163	1	1.312	1	.425	1	.096	1	1.887	1

Envelope Plate/Shell Principal Stresses (Continued)

	Plate		Sur...	Sigma1 [ksi]	LC	Sigma2 [ksi]	LC	Tau Max [k...	LC	Angle [rad]	LC	Von Mises [ksi]	LC
2654		min		.443	2	.262	2	.091	2	-.051	2	.386	2
2655		max	B	-.253	2	-.367	2	.377	1	1.881	2	1.802	1
2656		min		-1.302	1	-2.057	1	.057	2	1.716	1	.326	2
2657	P665	max	T	1.718	1	1.3	1	.209	1	-.04	1	1.552	1
2658		min		.367	2	.263	2	.052	2	-.313	2	.328	2
2659		max	B	-.264	2	-.297	2	.169	1	1.864	2	1.492	1
2660		min		-1.295	1	-1.632	1	.016	2	1.608	1	.282	2
2661	P666	max	T	1.659	1	1.266	1	.197	1	-.203	1	1.502	1
2662		min		.367	2	.256	2	.055	2	-.499	2	.326	2
2663		max	B	-.266	2	-.29	2	.157	1	1.487	2	1.446	1
2664		min		-1.264	1	-1.577	1	.012	2	1.44	1	.279	2
2665	P667	max	T	2.135	1	1.302	1	.416	1	-.069	1	1.863	1
2666		min		.445	2	.261	2	.092	2	-.237	2	.388	2
2667		max	B	-.258	2	-.367	2	.372	1	1.648	2	1.785	1
2668		min		-1.292	1	-2.036	1	.055	2	1.544	1	.326	2
2669	P668	max	T	2.04	1	1.278	1	.381	1	-.223	1	1.785	1
2670		min		.44	2	.259	2	.09	2	-.413	2	.383	2
2671		max	B	-.263	2	-.359	2	.338	1	1.422	2	1.714	1
2672		min		-1.272	1	-1.949	1	.048	2	1.387	1	.322	2
2673	P669	max	T	1.57	1	1.211	1	.179	1	-.342	1	1.425	1
2674		min		.36	2	.246	2	.057	2	-.657	2	.319	2
2675		max	B	-.263	2	-.281	2	.139	1	1.303	1	1.374	1
2676		min		-1.214	1	-1.492	1	.009	2	1.036	2	.273	2
2677	P670	max	T	1.46	1	1.139	1	.161	1	-.432	1	1.329	1
2678		min		.347	2	.235	2	.056	2	-.781	2	.307	2
2679		max	B	-.254	2	-.272	2	.122	1	1.224	1	1.284	1
2680		min		-1.145	1	-1.388	1	.009	2	.653	2	.264	2
2681	P671	max	T	1.889	1	1.217	1	.336	1	-.359	1	1.659	1
2682		min		.425	2	.253	2	.086	2	-.573	2	.37	2
2683		max	B	-.262	2	-.342	2	.295	1	1.253	1	1.594	1
2684		min		-1.215	1	-1.804	1	.04	2	1.219	2	.31	2
2685	P672	max	T	1.72	1	1.152	1	.284	1	-.449	1	1.518	1
2686		min		.401	2	.245	2	.078	2	-.7	2	.35	2
2687		max	B	-.261	2	-.324	2	.244	1	1.167	1	1.463	1
2688		min		-1.157	1	-1.645	1	.031	2	1.03	2	.297	2
2689	P673	max	T	1.344	1	1.05	1	.147	1	2.271	2	1.224	1
2690		min		.329	2	.223	2	.053	2	-.479	1	.291	2
2691		max	B	-.242	2	-.26	2	.11	1	1.196	1	1.184	1
2692		min		-1.059	1	-1.279	1	.009	2	.347	2	.252	2
2693	P674	max	T	1.225	1	.957	1	.134	1	2.203	2	1.115	1
2694		min		.307	2	.211	2	.048	2	-.485	1	.272	2
2695		max	B	-.228	2	-.245	2	.101	1	1.216	1	1.081	1
2696		min		-.965	1	-1.168	1	.008	2	.016	2	.237	2
2697	P675	max	T	1.561	1	1.075	1	.243	1	2.33	2	1.384	1
2698		min		.377	2	.237	2	.07	2	-.516	1	.33	2
2699		max	B	-.257	2	-.302	2	.204	1	1.109	1	1.335	1
2700		min		-1.084	1	-1.492	1	.023	2	.844	2	.282	2
2701	P676	max	T	1.386	1	.979	1	.203	1	2.255	2	1.234	1
2702		min		.343	2	.227	2	.058	2	-.517	1	.302	2
2703		max	B	-.249	2	-.274	2	.169	1	1.129	1	1.194	1
2704		min		-.989	1	-1.326	1	.013	2	.701	2	.262	2
2705	P677	max	T	1.11	1	.856	1	.127	1	2.166	2	1.007	1
2706		min		.28	2	.2	2	.04	2	-.441	1	.25	2
2707		max	B	-.211	2	-.229	2	.101	1	1.286	1	.978	1
2708		min		-.86	1	-1.063	1	.009	2	-.369	2	.221	2
2709	P678	max	T	1.008	1	.749	1	.13	1	2.173	2	.907	1
2710		min		.252	2	.189	2	.031	2	-.373	1	.227	2

Envelope Plate/Shell Principal Stresses (Continued)

	Plate		Sur...	Sigma1 [ksi]	LC	Sigma2 [ksi]	LC	Tau Max [k...	LC	Angle [rad]	LC	Von Mises [ksi]	LC
2711		max	B	-.191	2	-.215	2	.112	1	1.358	1	.882	1
2712		min		-.749	1	-.972	1	.012	2	-.7	2	.204	2
2713	P679	max	T	1.24	1	.879	1	.181	1	2.217	2	1.105	1
2714		min		.31	2	.218	2	.046	2	-.48	1	.276	2
2715		max	B	-.24	2	-.247	2	.152	1	1.188	1	1.072	1
2716		min		-.886	1	-1.191	1	.003	2	.53	2	.244	2
2717	P680	max	T	1.113	1	.771	1	.171	1	2.228	2	.988	1
2718		min		.276	2	.207	2	.034	2	-.412	1	.249	2
2719		max	B	-.218	2	-.23	2	.151	1	2.131	2	.961	1
2720		min		-.774	1	-1.076	1	.006	2	1.268	1	.224	2
2721	P681	max	T	.921	1	.639	1	.141	1	2.254	2	.817	1
2722		min		.224	2	.178	2	.023	2	-.303	1	.205	2
2723		max	B	-.168	2	-.202	2	.129	1	2.224	2	.796	1
2724		min		-.635	1	-.893	1	.017	2	1.413	1	.187	2
2725	P682	max	T	.846	1	.53	1	.158	1	-.245	1	.74	1
2726		min		.199	2	.164	2	.017	2	-.672	2	.184	2
2727		max	B	-.143	2	-.19	2	.15	1	2.085	2	.722	1
2728		min		-.522	1	-.823	1	.023	2	1.45	1	.171	2
2729	P683	max	T	1.009	1	.66	1	.175	1	2.333	2	.888	1
2730		min		.244	2	.196	2	.024	2	-.339	1	.224	2
2731		max	B	-.189	2	-.22	2	.161	1	2.027	2	.866	1
2732		min		-.659	1	-.981	1	.016	2	1.339	1	.206	2
2733	P684	max	T	.923	1	.55	1	.187	1	-.275	1	.805	1
2734		min		.218	2	.18	2	.019	2	-.555	2	.202	2
2735		max	B	-.16	2	-.209	2	.178	1	1.954	2	.786	1
2736		min		-.546	1	-.901	1	.024	2	1.392	1	.19	2
2737	P685	max	T	.781	1	.424	1	.179	1	-.199	1	.677	1
2738		min		.181	2	.144	2	.018	2	-.368	2	.166	2
2739		max	B	-.118	2	-.179	2	.173	1	1.993	2	.66	1
2740		min		-.415	1	-.761	1	.03	2	1.475	1	.158	2
2741	P686	max	T	.724	1	.324	1	.2	1	-.163	1	.629	1
2742		min		.17	2	.12	2	.025	2	-.173	2	.151	2
2743		max	B	-.094	2	-.169	2	.195	1	1.929	2	.612	1
2744		min		-.316	1	-.705	1	.038	2	1.495	1	.147	2
2745	P687	max	T	.852	1	.444	1	.204	1	-.225	1	.738	1
2746		min		.201	2	.157	2	.022	2	-.27	2	.183	2
2747		max	B	-.133	2	-.199	2	.197	1	1.905	2	.721	1
2748		min		-.438	1	-.832	1	.033	2	1.429	1	.176	2
2749	P688	max	T	.79	1	.345	1	.223	1	-.119	2	.686	1
2750		min		.191	2	.13	2	.03	2	-.185	1	.169	2
2751		max	B	-.107	2	-.19	2	.216	1	1.863	2	.67	1
2752		min		-.339	1	-.771	1	.041	2	1.457	1	.165	2
2753	P689	max	T	.674	1	.233	1	.221	1	-.076	2	.593	1
2754		min		.162	2	.094	2	.034	2	-.133	1	.141	2
2755		max	B	-.071	2	-.159	2	.215	1	1.884	2	.576	1
2756		min		-.225	1	-.654	1	.044	2	1.512	1	.138	2
2757	P690	max	T	.63	1	.152	1	.239	1	-.022	2	.569	1
2758		min		.156	2	.07	2	.043	2	-.105	1	.135	2
2759		max	B	-.049	2	-.15	2	.232	1	1.853	2	.55	1
2760		min		-.145	1	-.608	1	.051	2	1.529	1	.133	2
2761	P691	max	T	.737	1	.256	1	.241	1	-.047	2	.648	1
2762		min		.183	2	.103	2	.04	2	-.153	1	.159	2
2763		max	B	-.082	2	-.18	2	.234	1	1.832	2	.631	1
2764		min		-.25	1	-.718	1	.049	2	1.479	1	.156	2
2765	P692	max	T	.69	1	.177	1	.256	1	-.007	2	.621	1
2766		min		.176	2	.078	2	.049	2	-.125	1	.153	2
2767		max	B	-.061	2	-.171	2	.249	1	1.807	2	.602	1

Envelope Plate/Shell Principal Stresses (Continued)

	Plate		Sur...	Sigma1 [ksi]	LC	Sigma2 [ksi]	LC	Tau Max [k...	LC	Angle [rad]	LC	Von Mises [ksi]	LC
2768		min		-.172	1	-.669	1	.055	2	1.499	1	.15	2
2769	P693	max	T	.589	1	.083	1	.253	1	.014	2	.552	1
2770		min		.15	2	.048	2	.051	2	-.079	1	.133	2
2771		max	B	-.03	2	-.142	2	.244	1	1.832	2	.531	1
2772		min		-.077	1	-.565	1	.056	2	1.547	1	.129	2
2773	P694	max	T	.553	1	.029	2	.262	1	.042	2	.539	1
2774		min		.145	2	.028	1	.058	2	-.054	1	.133	2
2775		max	B	-.014	2	-.134	2	.252	1	1.818	2	.515	1
2776		min		-.022	1	-.526	1	.06	2	1.564	1	.127	2
2777	P695	max	T	.648	1	.11	1	.269	1	.019	2	.601	1
2778		min		.171	2	.056	2	.057	2	-.1	1	.151	2
2779		max	B	-.041	2	-.163	2	.26	1	1.789	2	.58	1
2780		min		-.106	1	-.626	1	.061	2	1.516	1	.147	2
2781	P696	max	T	.611	1	.056	1	.278	1	.038	2	.585	1
2782		min		.165	2	.037	2	.064	2	-.078	1	.15	2
2783		max	B	-.025	2	-.155	2	.267	1	1.775	2	.562	1
2784		min		-.052	1	-.586	1	.065	2	1.532	1	.144	2
2785	P697	max	T	.519	1	.014	2	.266	1	.066	2	.525	1
2786		min		.14	2	-.013	1	.063	2	-.031	1	.134	2
2787		max	B	.018	1	-.126	2	.253	1	1.809	2	.498	1
2788		min		-.002	2	-.489	1	.062	2	1.581	1	.125	2
2789	P698	max	T	.488	1	.003	2	.263	1	.086	2	.508	1
2790		min		.135	2	-.038	1	.066	2	-.011	1	.134	2
2791		max	B	.042	1	-.119	2	.249	1	1.802	2	.478	1
2792		min		.006	2	-.455	1	.062	2	1.595	1	.122	2
2793	P699	max	T	.577	1	.022	2	.281	1	.054	2	.57	1
2794		min		.16	2	.015	1	.069	2	-.059	1	.15	2
2795		max	B	-.012	1	-.147	2	.269	1	1.763	2	.544	1
2796		min		-.013	2	-.55	1	.067	2	1.546	1	.142	2
2797	P700	max	T	.547	1	.01	2	.28	1	.066	2	.553	1
2798		min		.155	2	-.012	1	.072	2	-.043	1	.15	2
2799		max	B	.014	1	-.14	2	.266	1	1.751	2	.524	1
2800		min		-.003	2	-.517	1	.068	2	1.556	1	.139	2
2801	P701	max	T	.459	1	-.004	2	.253	1	.1	2	.485	1
2802		min		.13	2	-.048	1	.067	2	.004	1	.132	2
2803		max	B	.05	1	-.112	2	.237	1	1.792	2	.451	1
2804		min		.01	2	-.424	1	.061	2	1.604	1	.117	2
2805	P702	max	T	.433	1	-.006	2	.238	1	.107	2	.456	1
2806		min		.124	2	-.043	1	.065	2	.01	1	.128	2
2807		max	B	.044	1	-.106	2	.22	1	1.774	2	.419	1
2808		min		.01	2	-.396	1	.058	2	1.603	1	.111	2
2809	P703	max	T	.52	1	.003	2	.273	1	.074	2	.533	1
2810		min		.15	2	-.026	1	.074	2	-.033	1	.148	2
2811		max	B	.027	1	-.134	2	.257	1	1.736	2	.502	1
2812		min		.002	2	-.487	1	.068	2	1.56	1	.135	2
2813	P704	max	T	.496	1	-.001	2	.262	1	.075	2	.51	1
2814		min		.145	2	-.027	1	.073	2	-.03	1	.146	2
2815		max	B	.027	1	-.128	2	.245	1	1.715	2	.476	1
2816		min		.004	2	-.462	1	.066	2	1.556	1	.13	2
2817	P705	max	T	.412	1	-.005	2	.219	1	.099	2	.425	1
2818		min		.119	2	-.026	1	.062	2	.003	1	.122	2
2819		max	B	.026	1	-.1	2	.199	1	1.738	2	.386	1
2820		min		.007	2	-.372	1	.053	2	1.589	1	.103	2
2821	P706	max	T	.404	1	-.001	2	.206	1	.051	2	.408	1
2822		min		.116	2	-.007	1	.058	2	-.006	1	.116	2
2823		max	B	.007	1	-.097	2	.186	1	1.649	2	.368	1
2824		min		.002	2	-.364	1	.049	2	1.569	1	.098	2

Envelope Plate/Shell Principal Stresses (Continued)

	Plate		Sur...	Sigma1 [ksi]	LC	Sigma2 [ksi]	LC	Tau Max [k...	LC	Angle [rad]	LC	Von Mises [ksi]	LC
2825	P707	max	T	.478	1	-.002	2	.248	1	.066	2	.487	1
2826		min		.14	2	-.018	1	.071	2	-.034	1	.141	2
2827		max	B	.018	1	-.124	2	.23	1	1.681	2	.451	1
2828		min		.003	2	-.442	1	.063	2	1.545	1	.125	2
2829	P708	max	T	.471	1	0	2	.238	1	.032	2	.473	1
2830		min		.137	2	-.005	1	.069	2	-.025	1	.138	2
2831		max	B	.005	1	-.122	2	.22	1	1.619	2	.437	1
2832		min		0	2	-.434	1	.061	2	1.547	1	.122	2
2833	P709	max	T	.58	1	0	2	.291	1	.043	1	.581	1
2834		min		.16	2	-.003	1	.08	2	-.016	2	.16	2
2835		max	B	.003	1	-.129	2	.278	1	1.607	1	.554	1
2836		min		0	2	-.553	1	.065	2	1.523	2	.129	2
2837	P710	max	T	.59	1	0	2	.3	1	.072	1	.595	1
2838		min		.162	2	-.009	1	.081	2	-.028	2	.161	2
2839		max	B	.009	1	-.132	2	.284	1	1.619	1	.564	1
2840		min		.002	2	-.559	1	.067	2	1.458	2	.133	2
2841	P711	max	T	.624	1	0	2	.313	1	.049	1	.625	1
2842		min		.173	2	-.002	1	.087	2	-.01	2	.173	2
2843		max	B	.002	1	-.149	2	.305	1	1.613	1	.608	1
2844		min		0	2	-.607	1	.075	2	1.536	2	.149	2
2845	P712	max	T	.635	1	.002	2	.32	1	.083	1	.638	1
2846		min		.175	2	-.005	1	.087	2	-.017	2	.174	2
2847		max	B	.004	1	-.152	2	.309	1	1.634	1	.616	1
2848		min		0	2	-.614	1	.076	2	1.485	2	.152	2
2849	P713	max	T	.608	1	.002	2	.308	1	.074	1	.612	1
2850		min		.164	2	-.008	1	.081	2	-.026	2	.163	2
2851		max	B	.008	1	-.138	2	.292	1	1.607	1	.579	1
2852		min		.002	2	-.575	1	.07	2	1.418	2	.139	2
2853	P714	max	T	.631	1	.007	2	.314	1	.079	1	.63	1
2854		min		.168	2	.003	1	.08	2	-.017	2	.164	2
2855		max	B	0	2	-.144	2	.297	1	1.598	1	.596	1
2856		min		-.002	1	-.597	1	.072	2	1.389	2	.144	2
2857	P715	max	T	.652	1	.005	2	.326	1	.09	1	.652	1
2858		min		.177	2	0	1	.086	2	-.014	2	.175	2
2859		max	B	0	2	-.156	2	.313	1	1.626	1	.627	1
2860		min		-.001	1	-.627	1	.078	2	1.449	2	.156	2
2861	P716	max	T	.674	1	.016	1	.329	1	.096	1	.666	1
2862		min		.181	2	.011	2	.085	2	-.005	2	.176	2
2863		max	B	-.004	2	-.162	2	.315	1	1.62	1	.639	1
2864		min		-.016	1	-.647	1	.079	2	1.421	2	.16	2
2865	P717	max	T	.66	1	.026	1	.317	1	.09	1	.647	1
2866		min		.172	2	.015	2	.078	2	-.003	2	.165	2
2867		max	B	-.005	2	-.151	2	.3	1	1.595	1	.612	1
2868		min		-.024	1	-.623	1	.073	2	1.366	2	.149	2
2869	P718	max	T	.692	1	.062	1	.315	1	.106	1	.663	1
2870		min		.177	2	.026	2	.075	2	.015	2	.165	2
2871		max	B	-.014	2	-.159	2	.297	1	1.598	1	.627	1
2872		min		-.06	1	-.655	1	.073	2	1.345	2	.153	2
2873	P719	max	T	.701	1	.043	1	.329	1	.107	1	.681	1
2874		min		.185	2	.02	2	.083	2	.006	2	.176	2
2875		max	B	-.011	2	-.168	2	.315	1	1.619	1	.652	1
2876		min		-.042	1	-.672	1	.079	2	1.398	2	.163	2
2877	P720	max	T	.733	1	.081	1	.326	1	.123	1	.696	1
2878		min		.19	2	.031	2	.079	2	.022	2	.177	2
2879		max	B	-.02	2	-.176	2	.311	1	1.622	1	.665	1
2880		min		-.079	1	-.701	1	.078	2	1.376	2	.166	2
2881	P721	max	T	.729	1	.112	1	.309	1	.126	1	.68	1

Envelope Plate/Shell Principal Stresses (Continued)

	Plate		Sur...	Sigma1 [ksi]	LC	Sigma2 [ksi]	LC	Tau Max [k...	LC	Angle [rad]	LC	Von Mises [ksi]	LC
2882		min		.183	2	.041	2	.071	2	.037	2	.166	2
2883		max	B	-.026	2	-.167	2	.29	1	1.605	1	.642	1
2884		min		-.109	1	-.69	1	.07	2	1.324	2	.156	2
2885	P722	max	T	.771	1	.174	1	.298	1	.15	1	.7	1
2886		min		.189	2	.058	2	.065	2	.064	2	.168	2
2887		max	B	-.041	2	-.175	2	.279	1	1.615	1	.66	1
2888		min		-.171	1	-.729	1	.067	2	1.299	2	.159	2
2889	P723	max	T	.769	1	.131	1	.319	1	.143	1	.713	1
2890		min		.196	2	.046	2	.075	2	.041	2	.178	2
2891		max	B	-.033	2	-.184	2	.303	1	1.629	1	.68	1
2892		min		-.13	1	-.735	1	.075	2	1.353	2	.169	2
2893	P724	max	T	.812	1	.193	1	.309	1	.167	1	.734	1
2894		min		.203	2	.064	2	.069	2	.064	2	.18	2
2895		max	B	-.049	2	-.192	2	.291	1	1.64	1	.698	1
2896		min		-.193	1	-.774	1	.071	2	1.328	2	.173	2
2897	P725	max	T	.818	1	.249	1	.285	1	.178	1	.726	1
2898		min		.196	2	.079	2	.059	2	.1	2	.171	2
2899		max	B	-.06	2	-.184	2	.262	1	1.628	1	.683	1
2900		min		-.248	1	-.772	1	.062	2	1.268	2	.162	2
2901	P726	max	T	.872	1	.335	1	.269	1	.213	1	.762	1
2902		min		.205	2	.101	2	.052	2	.148	2	.178	2
2903		max	B	-.082	2	-.193	2	.242	1	1.646	1	.714	1
2904		min		-.337	1	-.821	1	.056	2	1.228	2	.168	2
2905	P727	max	T	.86	1	.268	1	.296	1	.197	1	.762	1
2906		min		.211	2	.085	2	.063	2	.096	2	.184	2
2907		max	B	-.068	2	-.201	2	.274	1	1.656	1	.722	1
2908		min		-.269	1	-.817	1	.066	2	1.298	2	.177	2
2909	P728	max	T	.916	1	.354	1	.281	1	.233	1	.8	1
2910		min		.22	2	.109	2	.056	2	.141	2	.19	2
2911		max	B	-.09	2	-.21	2	.254	1	1.676	1	.754	1
2912		min		-.358	1	-.867	1	.06	2	1.259	2	.182	2
2913	P729	max	T	.935	1	.433	1	.251	1	.255	1	.811	1
2914		min		.216	2	.125	2	.046	2	.217	2	.188	2
2915		max	B	-.106	2	-.202	2	.218	1	1.67	1	.758	1
2916		min		-.439	1	-.875	1	.048	2	1.173	2	.175	2
2917	P730	max	T	1.01	1	.539	1	.235	1	.317	2	.875	1
2918		min		.23	2	.149	2	.041	2	.308	1	.202	2
2919		max	B	-.132	2	-.212	2	.191	1	1.708	1	.816	1
2920		min		-.554	1	-.937	1	.04	2	1.095	2	.185	2
2921	P731	max	T	.982	1	.451	1	.265	1	.279	1	.851	1
2922		min		.231	2	.134	2	.049	2	.209	2	.201	2
2923		max	B	-.115	2	-.219	2	.23	1	1.706	1	.799	1
2924		min		-.461	1	-.922	1	.052	2	1.206	2	.19	2
2925	P732	max	T	1.06	1	.558	1	.251	1	.338	1	.919	1
2926		min		.246	2	.16	2	.043	2	.312	2	.216	2
2927		max	B	-.143	2	-.229	2	.205	1	1.752	1	.859	1
2928		min		-.577	1	-.987	1	.043	2	1.13	2	.2	2
2929	P733	max	T	1.099	1	.652	1	.223	1	.444	2	.957	1
2930		min		.249	2	.172	2	.039	2	.375	1	.221	2
2931		max	B	-.16	2	-.222	2	.165	1	1.771	1	.891	1
2932		min		-.679	1	-1.009	1	.031	2	.974	2	.198	2
2933	P734	max	T	1.21	1	.768	1	.221	1	.567	2	1.06	1
2934		min		.275	2	.191	2	.042	2	.456	1	.244	2
2935		max	B	-.189	2	-.234	2	.144	1	1.879	1	.985	1
2936		min		-.809	1	-1.097	1	.023	2	.762	2	.215	2
2937	P735	max	T	1.157	1	.673	1	.242	1	.452	2	1.006	1
2938		min		.266	2	.183	2	.041	2	.413	1	.236	2

Envelope Plate/Shell Principal Stresses (Continued)

	Plate		Sur...	Sigma1 [ksi]	LC	Sigma2 [ksi]	LC	Tau Max [k...	LC	Angle [rad]	LC	Von Mises [ksi]	LC
2939		max	B	-.174	2	-.239	2	.179	1	1.828	1	.937	1
2940		min		-.705	1	-1.063	1	.033	2	1.007	2	.214	2
2941	P736	max	T	1.28	1	.79	1	.245	1	.595	2	1.119	1
2942		min		.295	2	.203	2	.046	2	.504	1	.261	2
2943		max	B	-.205	2	-.251	2	.161	1	1.955	1	1.038	1
2944		min		-.839	1	-1.161	1	.023	2	.773	2	.232	2
2945	P737	max	T	1.35	1	.88	1	.235	1	.647	2	1.187	1
2946		min		.307	2	.206	2	.05	2	.538	1	.271	2
2947		max	B	-.214	2	-.25	2	.141	1	2.037	1	1.102	1
2948		min		-.933	1	-1.216	1	.018	2	.383	2	.234	2
2949	P738	max	T	1.519	1	.983	1	.268	1	.668	2	1.335	1
2950		min		.343	2	.219	2	.062	2	.598	1	.301	2
2951		max	B	-.229	2	-.277	2	.168	1	2.182	1	1.24	1
2952		min		-1.038	1	-1.373	1	.024	2	-.026	2	.256	2
2953	P739	max	T	1.439	1	.902	1	.268	1	.693	2	1.26	1
2954		min		.332	2	.218	2	.057	2	.6	1	.292	2
2955		max	B	-.23	2	-.271	2	.167	1	2.133	1	1.167	1
2956		min		-.964	1	-1.298	1	.02	2	.321	2	.253	2
2957	P740	max	T	1.66	1	1.005	1	.328	1	.724	2	1.448	1
2958		min		.38	2	.228	2	.076	2	.673	1	.332	2
2959		max	B	-.244	2	-.307	2	.219	1	2.282	1	1.339	1
2960		min		-1.065	1	-1.503	1	.031	2	-.092	2	.281	2
2961	P741	max	T	1.732	1	1.08	1	.326	1	.642	2	1.515	1
2962		min		.384	2	.23	2	.077	2	.623	1	.335	2
2963		max	B	-.237	2	-.311	2	.229	1	2.254	1	1.41	1
2964		min		-1.125	1	-1.583	1	.037	2	-.305	2	.282	2
2965	P742	max	T	1.946	1	1.154	1	.396	1	.601	1	1.695	1
2966		min		.421	2	.238	2	.092	2	.57	2	.366	2
2967		max	B	-.239	2	-.345	2	.307	1	2.247	1	1.583	1
2968		min		-1.184	1	-1.798	1	.053	2	-.493	2	.306	2
2969	P743	max	T	1.902	1	1.084	1	.409	1	.699	1	1.653	1
2970		min		.427	2	.233	2	.097	2	.696	2	.37	2
2971		max	B	-.245	2	-.348	2	.305	1	2.345	1	1.532	1
2972		min		-1.133	1	-1.743	1	.052	2	-.308	2	.31	2
2973	P744	max	T	2.287	1	1.166	1	.561	1	.677	1	1.981	1
2974		min		.497	2	.241	2	.128	2	.637	2	.43	2
2975		max	B	-.243	2	-.41	2	.464	1	2.324	1	1.843	1
2976		min		-1.195	1	-2.122	1	.083	2	-.496	2	.357	2
2977	P745	max	T	1.757	1	1.077	1	.34	1	2.326	2	1.534	1
2978		min		.426	2	.245	2	.09	2	-.591	1	.37	2
2979		max	B	-.261	2	-.352	2	.3	1	1.01	1	1.48	1
2980		min		-1.086	1	-1.685	1	.045	2	.856	2	.316	2
2981	P746	max	T	1.554	1	.995	1	.279	1	2.257	2	1.363	1
2982		min		.386	2	.241	2	.072	2	-.59	1	.338	2
2983		max	B	-.26	2	-.319	2	.243	1	1.024	1	1.319	1
2984		min		-1.007	1	-1.492	1	.029	2	.772	2	.294	2
2985	P747	max	T	2.043	1	1.073	1	.485	1	2.294	2	1.77	1
2986		min		.499	2	.255	2	.122	2	-.677	1	.432	2
2987		max	B	-.266	2	-.426	2	.445	1	.906	1	1.71	1
2988		min		-1.081	1	-1.971	1	.08	2	.797	2	.373	2
2989	P748	max	T	1.682	1	.989	1	.346	1	2.209	2	1.464	1
2990		min		.426	2	.251	2	.087	2	-.692	1	.371	2
2991		max	B	-.267	2	-.362	2	.309	1	.9	1	1.418	1
2992		min		-1.003	1	-1.622	1	.048	2	.699	2	.325	2
2993	P749	max	T	1.356	1	.895	1	.23	1	2.218	2	1.194	1
2994		min		.341	2	.233	2	.054	2	-.546	1	.302	2
2995		max	B	-.254	2	-.281	2	.2	1	1.088	1	1.159	1

Envelope Plate/Shell Principal Stresses (Continued)

	Plate		Sur...	Sigma1 [ksi]	LC	Sigma2 [ksi]	LC	Tau Max [k...	LC	Angle [rad]	LC	Von Mises [ksi]	LC
2996		min		-.906	1	-1.307	1	.013	2	.762	2	.268	2
2997	P750	max	T	1.204	1	.79	1	.207	1	2.237	2	1.06	1
2998		min		.3	2	.225	2	.037	2	-.472	1	.27	2
2999		max	B	-.241	2	-.25	2	.185	1	1.422	2	1.032	1
3000		min		-.797	1	-1.166	1	.005	2	1.176	1	.246	2
3001	P751	max	T	1.463	1	.906	1	.278	1	2.179	2	1.279	1
3002		min		.374	2	.249	2	.063	2	-.638	1	.33	2
3003		max	B	-.266	2	-.319	2	.247	1	.97	1	1.243	1
3004		min		-.92	1	-1.414	1	.027	2	.676	2	.296	2
3005	P752	max	T	1.269	1	.802	1	.234	1	2.198	2	1.112	1
3006		min		.321	2	.242	2	.04	2	-.548	1	.29	2
3007		max	B	-.258	2	-.275	2	.209	1	1.077	1	1.085	1
3008		min		-.814	1	-1.232	1	.008	2	.899	2	.267	2
3009	P753	max	T	1.082	1	.678	1	.202	1	-.388	1	.947	1
3010		min		.263	2	.214	2	.025	2	-.774	2	.242	2
3011		max	B	-.209	2	-.238	2	.186	1	1.856	2	.925	1
3012		min		-.681	1	-1.053	1	.015	2	1.265	1	.225	2
3013	P754	max	T	.986	1	.567	1	.21	1	-.314	1	.857	1
3014		min		.235	2	.195	2	.02	2	-.469	2	.218	2
3015		max	B	-.177	2	-.229	2	.198	1	1.864	2	.838	1
3016		min		-.567	1	-.963	1	.026	2	1.334	1	.208	2
3017	P755	max	T	1.133	1	.691	1	.221	1	-.446	1	.989	1
3018		min		.279	2	.231	2	.024	2	-.775	2	.258	2
3019		max	B	-.229	2	-.255	2	.203	1	1.722	2	.968	1
3020		min		-.699	1	-1.105	1	.013	2	1.187	1	.244	2
3021	P756	max	T	1.029	1	.579	1	.225	1	-.359	1	.893	1
3022		min		.25	2	.21	2	.02	2	-.403	2	.233	2
3023		max	B	-.193	2	-.246	2	.211	1	1.801	2	.876	1
3024		min		-.584	1	-1.007	1	.026	2	1.273	1	.224	2
3025	P757	max	T	.907	1	.46	1	.224	1	-.203	2	.786	1
3026		min		.219	2	.169	2	.025	2	-.256	1	.199	2
3027		max	B	-.147	2	-.219	2	.215	1	1.84	2	.769	1
3028		min		-.459	1	-.888	1	.036	2	1.383	1	.193	2
3029	P758	max	T	.842	1	.362	1	.24	1	-.081	2	.731	1
3030		min		.209	2	.139	2	.035	2	-.211	1	.185	2
3031		max	B	-.119	2	-.209	2	.232	1	1.814	2	.716	1
3032		min		-.36	1	-.824	1	.045	2	1.419	1	.181	2
3033	P759	max	T	.946	1	.473	1	.236	1	-.149	2	.819	1
3034		min		.235	2	.179	2	.028	2	-.291	1	.213	2
3035		max	B	-.16	2	-.236	2	.226	1	1.796	2	.804	1
3036		min		-.477	1	-.928	1	.038	2	1.335	1	.209	2
3037	P760	max	T	.878	1	.376	1	.251	1	-.052	2	.763	1
3038		min		.226	2	.147	2	.039	2	-.24	1	.199	2
3039		max	B	-.13	2	-.226	2	.242	1	1.778	2	.748	1
3040		min		-.378	1	-.861	1	.048	2	1.38	1	.196	2
3041	P761	max	T	.786	1	.274	1	.256	1	-.026	2	.691	1
3042		min		.201	2	.111	2	.045	2	-.176	1	.175	2
3043		max	B	-.093	2	-.199	2	.248	1	1.791	2	.675	1
3044		min		-.272	1	-.768	1	.053	2	1.447	1	.173	2
3045	P762	max	T	.737	1	.197	1	.27	1	.003	2	.661	1
3046		min		.195	2	.085	2	.055	2	-.147	1	.169	2
3047		max	B	-.07	2	-.19	2	.262	1	1.771	2	.644	1
3048		min		-.195	1	-.719	1	.06	2	1.469	1	.167	2
3049	P763	max	T	.821	1	.289	1	.266	1	-.011	2	.721	1
3050		min		.218	2	.118	2	.05	2	-.201	1	.189	2
3051		max	B	-.103	2	-.216	2	.257	1	1.76	2	.705	1
3052		min		-.291	1	-.804	1	.057	2	1.414	1	.187	2

Envelope Plate/Shell Principal Stresses (Continued)

	Plate		Sur...	Sigma1 [ksi]	LC	Sigma2 [ksi]	LC	Tau Max [k...	LC	Angle [rad]	LC	Von Mises [ksi]	LC
3053	P764	max	T	.772	1	.213	1	.28	1	.01	2	.691	1
3054		min		.211	2	.091	2	.06	2	-.17	1	.183	2
3055		max	B	-.079	2	-.207	2	.27	1	1.743	2	.673	1
3056		min		-.214	1	-.754	1	.064	2	1.44	1	.181	2
3057	P765	max	T	.695	1	.131	1	.282	1	.022	2	.639	1
3058		min		.188	2	.063	2	.063	2	-.122	1	.166	2
3059		max	B	-.051	2	-.182	2	.272	1	1.755	2	.62	1
3060		min		-.13	1	-.674	1	.066	2	1.488	1	.163	2
3061	P766	max	T	.657	1	.078	1	.29	1	.035	2	.622	1
3062		min		.183	2	.044	2	.07	2	-.101	1	.165	2
3063		max	B	-.034	2	-.174	2	.279	1	1.74	2	.6	1
3064		min		-.076	1	-.635	1	.07	2	1.503	1	.16	2
3065	P767	max	T	.729	1	.148	1	.291	1	.023	2	.668	1
3066		min		.204	2	.068	2	.068	2	-.144	1	.18	2
3067		max	B	-.059	2	-.199	2	.281	1	1.727	2	.649	1
3068		min		-.149	1	-.71	1	.07	2	1.461	1	.177	2
3069	P768	max	T	.692	1	.095	1	.299	1	.032	2	.65	1
3070		min		.198	2	.049	2	.075	2	-.122	1	.179	2
3071		max	B	-.041	2	-.191	2	.288	1	1.713	2	.629	1
3072		min		-.096	1	-.672	1	.075	2	1.478	1	.174	2
3073	P769	max	T	.624	1	.036	1	.294	1	.045	2	.607	1
3074		min		.177	2	.028	2	.075	2	-.083	1	.165	2
3075		max	B	-.021	2	-.167	2	.282	1	1.727	2	.582	1
3076		min		-.035	1	-.599	1	.073	2	1.516	1	.157	2
3077	P770	max	T	.595	1	.016	2	.294	1	.053	2	.591	1
3078		min		.172	2	.007	1	.078	2	-.069	1	.165	2
3079		max	B	-.007	1	-.16	2	.28	1	1.714	2	.564	1
3080		min		-.011	2	-.568	1	.074	2	1.524	1	.155	2
3081	P771	max	T	.659	1	.053	1	.303	1	.038	2	.634	1
3082		min		.192	2	.033	2	.08	2	-.104	1	.178	2
3083		max	B	-.027	2	-.183	2	.292	1	1.7	2	.612	1
3084		min		-.054	1	-.637	1	.078	2	1.49	1	.171	2
3085	P772	max	T	.631	1	.022	1	.304	1	.042	2	.62	1
3086		min		.187	2	.02	2	.084	2	-.09	1	.178	2
3087		max	B	-.016	2	-.177	2	.292	1	1.686	2	.596	1
3088		min		-.023	1	-.607	1	.08	2	1.499	1	.169	2
3089	P773	max	T	.569	1	.007	2	.289	1	.056	2	.574	1
3090		min		.167	2	-.01	1	.08	2	-.06	1	.164	2
3091		max	B	.01	1	-.154	2	.275	1	1.698	2	.545	1
3092		min		-.004	2	-.54	1	.075	2	1.528	1	.152	2
3093	P774	max	T	.548	1	.002	2	.282	1	.055	2	.556	1
3094		min		.163	2	-.016	1	.08	2	-.057	1	.162	2
3095		max	B	.015	1	-.149	2	.266	1	1.677	2	.525	1
3096		min		0	2	-.517	1	.074	2	1.524	1	.148	2
3097	P775	max	T	.607	1	.011	2	.302	1	.044	2	.606	1
3098		min		.182	2	.003	1	.086	2	-.081	1	.177	2
3099		max	B	-.004	1	-.171	2	.289	1	1.671	2	.579	1
3100		min		-.009	2	-.581	1	.081	2	1.503	1	.167	2
3101	P776	max	T	.588	1	.005	2	.298	1	.042	2	.592	1
3102		min		.178	2	-.007	1	.087	2	-.077	1	.176	2
3103		max	B	.006	1	-.166	2	.283	1	1.652	2	.563	1
3104		min		-.004	2	-.56	1	.081	2	1.502	1	.165	2
3105	P777	max	T	.532	1	0	2	.272	1	.046	2	.538	1
3106		min		.159	2	-.012	1	.08	2	-.058	1	.159	2
3107		max	B	.012	1	-.145	2	.256	1	1.648	2	.505	1
3108		min		0	2	-.499	1	.073	2	1.518	1	.145	2
3109	P778	max	T	.525	1	0	2	.264	1	.022	2	.527	1

Envelope Plate/Shell Principal Stresses (Continued)

	Plate		Sur...	Sigma1 [ksi]	LC	Sigma2 [ksi]	LC	Tau Max [k...	LC	Angle [rad]	LC	Von Mises [ksi]	LC
3110		min		.157	2	-.004	1	.078	2	-.037	1	.157	2
3111		max	B	.004	1	-.143	2	.247	1	1.603	2	.493	1
3112		min		0	2	-.491	1	.072	2	1.534	1	.144	2
3113	P779	max	T	.574	1	.001	2	.291	1	.035	2	.578	1
3114		min		.175	2	-.008	1	.087	2	-.074	1	.174	2
3115		max	B	.008	1	-.163	2	.276	1	1.628	2	.548	1
3116		min		-.001	2	-.544	1	.081	2	1.499	1	.163	2
3117	P780	max	T	.566	1	0	2	.285	1	.016	2	.568	1
3118		min		.173	2	-.003	1	.086	2	-.045	1	.173	2
3119		max	B	.003	1	-.162	2	.269	1	1.594	2	.537	1
3120		min		0	2	-.535	1	.081	2	1.526	1	.162	2
3121	P781	max	T	.656	1	0	2	.328	1	.052	1	.656	1
3122		min		.184	2	0	1	.092	2	-.007	2	.184	2
3123		max	B	0	1	-.166	2	.324	1	1.616	1	.649	1
3124		min		0	2	-.648	1	.083	2	1.543	2	.166	2
3125	P782	max	T	.667	1	.003	2	.334	1	.092	1	.668	1
3126		min		.185	2	-.002	1	.091	2	-.011	2	.184	2
3127		max	B	0	1	-.168	2	.328	1	1.644	1	.655	1
3128		min		0	2	-.655	1	.084	2	1.501	2	.168	2
3129	P783	max	T	.674	1	0	2	.337	1	.054	1	.674	1
3130		min		.191	2	0	1	.095	2	-.006	2	.191	2
3131		max	B	0	1	-.18	2	.338	1	1.618	1	.675	1
3132		min		0	2	-.675	1	.09	2	1.547	2	.18	2
3133	P784	max	T	.687	1	.003	2	.343	1	.098	1	.686	1
3134		min		.193	2	.001	1	.095	2	-.007	2	.191	2
3135		max	B	-.002	2	-.181	2	.34	1	1.651	1	.681	1
3136		min		-.002	1	-.682	1	.09	2	1.512	2	.181	2
3137	P785	max	T	.683	1	.008	1	.338	1	.101	1	.68	1
3138		min		.188	2	.007	2	.091	2	-.006	2	.184	2
3139		max	B	-.003	2	-.172	2	.329	1	1.641	1	.662	1
3140		min		-.009	1	-.667	1	.084	2	1.471	2	.17	2
3141	P786	max	T	.704	1	.026	1	.339	1	.11	1	.691	1
3142		min		.191	2	.013	2	.089	2	.003	2	.185	2
3143		max	B	-.008	2	-.177	2	.329	1	1.638	1	.671	1
3144		min		-.027	1	-.684	1	.085	2	1.445	2	.173	2
3145	P787	max	T	.702	1	.013	1	.344	1	.111	1	.695	1
3146		min		.195	2	.008	2	.094	2	0	2	.191	2
3147		max	B	-.005	2	-.185	2	.339	1	1.652	1	.686	1
3148		min		-.014	1	-.693	1	.09	2	1.486	2	.182	2
3149	P788	max	T	.721	1	.034	1	.344	1	.122	1	.705	1
3150		min		.199	2	.015	2	.092	2	.009	2	.192	2
3151		max	B	-.01	2	-.189	2	.337	1	1.652	1	.692	1
3152		min		-.035	1	-.709	1	.09	2	1.463	2	.184	2
3153	P789	max	T	.73	1	.055	1	.337	1	.122	1	.704	1
3154		min		.196	2	.023	2	.087	2	.014	2	.185	2
3155		max	B	-.015	2	-.183	2	.326	1	1.638	1	.681	1
3156		min		-.056	1	-.707	1	.084	2	1.422	2	.176	2
3157	P790	max	T	.761	1	.095	1	.333	1	.139	1	.718	1
3158		min		.201	2	.035	2	.083	2	.027	2	.186	2
3159		max	B	-.025	2	-.19	2	.32	1	1.643	1	.692	1
3160		min		-.095	1	-.735	1	.082	2	1.4	2	.179	2
3161	P791	max	T	.746	1	.065	1	.341	1	.136	1	.716	1
3162		min		.203	2	.025	2	.089	2	.02	2	.192	2
3163		max	B	-.018	2	-.195	2	.332	1	1.655	1	.699	1
3164		min		-.066	1	-.73	1	.088	2	1.441	2	.187	2
3165	P792	max	T	.775	1	.105	1	.335	1	.154	1	.729	1
3166		min		.209	2	.037	2	.086	2	.033	2	.193	2

Envelope Plate/Shell Principal Stresses (Continued)

	Plate		Sur...	Sigma1 [ksi]	LC	Sigma2 [ksi]	LC	Tau Max [k...	LC	Angle [rad]	LC	Von Mises [ksi]	LC
3167		max	B	-.029	2	-.202	2	.324	1	1.661	1	.708	1
3168		min		-.107	1	-.756	1	.086	2	1.42	2	.189	2
3169	P793	max	T	.797	1	.146	1	.326	1	.159	1	.735	1
3170		min		.207	2	.05	2	.078	2	.044	2	.187	2
3171		max	B	-.039	2	-.198	2	.311	1	1.652	1	.706	1
3172		min		-.146	1	-.768	1	.08	2	1.377	2	.182	2
3173	P794	max	T	.839	1	.208	1	.315	1	.185	1	.756	1
3174		min		.214	2	.069	2	.073	2	.065	2	.189	2
3175		max	B	-.055	2	-.206	2	.298	1	1.664	1	.724	1
3176		min		-.21	1	-.805	1	.076	2	1.352	2	.185	2
3177	P795	max	T	.81	1	.157	1	.327	1	.176	1	.745	1
3178		min		.215	2	.053	2	.081	2	.048	2	.194	2
3179		max	B	-.043	2	-.21	2	.314	1	1.672	1	.721	1
3180		min		-.159	1	-.787	1	.083	2	1.397	2	.192	2
3181	P796	max	T	.851	1	.219	1	.316	1	.203	1	.766	1
3182		min		.222	2	.072	2	.075	2	.067	2	.197	2
3183		max	B	-.06	2	-.218	2	.3	1	1.687	1	.737	1
3184		min		-.223	1	-.823	1	.079	2	1.372	2	.195	2
3185	P797	max	T	.887	1	.282	1	.302	1	.217	1	.785	1
3186		min		.222	2	.09	2	.066	2	.094	2	.193	2
3187		max	B	-.075	2	-.215	2	.281	1	1.682	1	.747	1
3188		min		-.286	1	-.848	1	.07	2	1.321	2	.189	2
3189	P798	max	T	.943	1	.368	1	.287	1	.256	1	.823	1
3190		min		.231	2	.115	2	.058	2	.136	2	.2	2
3191		max	B	-.098	2	-.225	2	.261	1	1.706	1	.78	1
3192		min		-.376	1	-.897	1	.064	2	1.283	2	.195	2
3193	P799	max	T	.899	1	.293	1	.303	1	.238	1	.794	1
3194		min		.231	2	.094	2	.068	2	.093	2	.201	2
3195		max	B	-.08	2	-.227	2	.282	1	1.707	1	.76	1
3196		min		-.299	1	-.864	1	.074	2	1.341	2	.2	2
3197	P800	max	T	.954	1	.378	1	.288	1	.281	1	.832	1
3198		min		.24	2	.12	2	.06	2	.132	2	.208	2
3199		max	B	-.104	2	-.237	2	.261	1	1.736	1	.792	1
3200		min		-.389	1	-.911	1	.067	2	1.302	2	.206	2
3201	P801	max	T	1.01	1	.466	1	.272	1	.307	1	.876	1
3202		min		.243	2	.142	2	.051	2	.201	2	.211	2
3203		max	B	-.124	2	-.234	2	.237	1	1.742	1	.825	1
3204		min		-.479	1	-.953	1	.055	2	1.23	2	.203	2
3205	P802	max	T	1.091	1	.573	1	.259	1	.373	1	.945	1
3206		min		.257	2	.169	2	.044	2	.308	2	.227	2
3207		max	B	-.153	2	-.245	2	.21	1	1.796	1	.886	1
3208		min		-.597	1	-1.017	1	.046	2	1.152	2	.214	2
3209	P803	max	T	1.02	1	.475	1	.272	1	.337	1	.884	1
3210		min		.251	2	.148	2	.052	2	.194	2	.219	2
3211		max	B	-.131	2	-.248	2	.236	1	1.777	1	.836	1
3212		min		-.492	1	-.965	1	.059	2	1.247	2	.215	2
3213	P804	max	T	1.099	1	.582	1	.259	1	.412	1	.953	1
3214		min		.266	2	.178	2	.044	2	.302	2	.234	2
3215		max	B	-.161	2	-.259	2	.209	1	1.84	1	.895	1
3216		min		-.61	1	-1.028	1	.049	2	1.165	2	.226	2
3217	P805	max	T	1.192	1	.688	1	.252	1	.468	2	1.036	1
3218		min		.278	2	.195	2	.041	2	.459	1	.248	2
3219		max	B	-.185	2	-.256	2	.185	1	1.887	1	.966	1
3220		min		-.726	1	-1.096	1	.035	2	1.021	2	.229	2
3221	P806	max	T	1.324	1	.805	1	.26	1	.642	2	1.155	1
3222		min		.31	2	.216	2	.047	2	.565	1	.275	2
3223		max	B	-.218	2	-.269	2	.169	1	2.037	1	1.072	1

Envelope Plate/Shell Principal Stresses (Continued)

	Plate		Sur...	Sigma1 [ksi]	LC	Sigma2 [ksi]	LC	Tau Max [k...	LC	Angle [rad]	LC	Von Mises [ksi]	LC
3224		min		-.862	1	-1.2	1	.026	2	.759	2	.248	2
3225	P807	max	T	1.201	1	.696	1	.252	1	.512	1	1.044	1
3226		min		.286	2	.207	2	.04	2	.484	2	.256	2
3227		max	B	-.195	2	-.271	2	.182	1	1.947	1	.975	1
3228		min		-.741	1	-1.105	1	.038	2	1.022	2	.242	2
3229	P808	max	T	1.336	1	.811	1	.263	1	.703	2	1.166	1
3230		min		.32	2	.229	2	.045	2	.637	1	.285	2
3231		max	B	-.228	2	-.288	2	.167	1	2.128	1	1.083	1
3232		min		-.877	1	-1.211	1	.03	2	.744	2	.263	2
3233	P809	max	T	1.502	1	.917	1	.293	1	.76	2	1.312	1
3234		min		.353	2	.23	2	.062	2	.677	1	.311	2
3235		max	B	-.243	2	-.295	2	.183	1	2.24	1	1.213	1
3236		min		-.987	1	-1.354	1	.026	2	.303	2	.273	2
3237	P810	max	T	1.74	1	1.009	1	.365	1	.819	2	1.513	1
3238		min		.407	2	.236	2	.085	2	.783	1	.354	2
3239		max	B	-.25	2	-.34	2	.255	1	-.049	2	1.401	1
3240		min		-1.074	1	-1.584	1	.045	2	-.715	1	.305	2
3241	P811	max	T	1.525	1	.918	1	.304	1	.855	2	1.33	1
3242		min		.369	2	.242	2	.064	2	.771	1	.325	2
3243		max	B	-.25	2	-.32	2	.19	1	.335	2	1.23	1
3244		min		-.996	1	-1.375	1	.035	2	-.775	1	.292	2
3245	P812	max	T	1.79	1	1.018	1	.386	1	.916	2	1.555	1
3246		min		.434	2	.248	2	.093	2	.884	1	.377	2
3247		max	B	-.254	2	-.374	2	.271	1	.055	2	1.436	1
3248		min		-1.086	1	-1.629	1	.06	2	-.582	1	.33	2
3249	P813	max	T	1.51	1	.9	1	.305	1	2.075	2	1.316	1
3250		min		.401	2	.26	2	.07	2	-.766	1	.352	2
3251		max	B	-.274	2	-.354	2	.275	1	.819	1	1.284	1
3252		min		-.918	1	-1.467	1	.04	2	.502	2	.322	2
3253	P814	max	T	1.307	1	.808	1	.25	1	2.122	2	1.142	1
3254		min		.34	2	.258	2	.041	2	-.634	1	.307	2
3255		max	B	-.274	2	-.3	2	.225	1	.969	1	1.119	1
3256		min		-.824	1	-1.274	1	.013	2	.598	2	.288	2
3257	P815	max	T	1.519	1	.903	1	.308	1	2.266	1	1.324	1
3258		min		.422	2	.277	2	.073	2	1.96	2	.372	2
3259		max	B	-.288	2	-.389	2	.283	1	.691	1	1.301	1
3260		min		-.923	1	-1.489	1	.051	2	.356	2	.349	2
3261	P816	max	T	1.305	1	.801	1	.252	1	2.003	2	1.14	1
3262		min		.353	2	.274	2	.04	2	-.733	1	.321	2
3263		max	B	-.285	2	-.325	2	.228	1	.847	1	1.123	1
3264		min		-.823	1	-1.279	1	.02	2	.337	2	.307	2
3265	P817	max	T	1.158	1	.698	1	.23	1	2.333	2	1.01	1
3266		min		.291	2	.248	2	.021	2	-.512	1	.272	2
3267		max	B	-.25	2	-.27	2	.21	1	1.641	2	.992	1
3268		min		-.712	1	-1.133	1	.01	2	1.102	1	.26	2
3269	P818	max	T	1.05	1	.587	1	.231	1	-.33	2	.911	1
3270		min		.262	2	.223	2	.019	2	-.408	1	.245	2
3271		max	B	-.209	2	-.26	2	.216	1	1.771	2	.895	1
3272		min		-.598	1	-1.029	1	.025	2	1.209	1	.239	2
3273	P819	max	T	1.155	1	.698	1	.229	1	2.271	2	1.007	1
3274		min		.298	2	.265	2	.017	2	-.583	1	.283	2
3275		max	B	-.27	2	-.28	2	.207	1	1.725	2	.993	1
3276		min		-.718	1	-1.133	1	.005	2	1.011	1	.276	2
3277	P820	max	T	1.048	1	.589	1	.229	1	-.229	2	.91	1
3278		min		.272	2	.234	2	.019	2	-.46	1	.255	2
3279		max	B	-.224	2	-.272	2	.211	1	1.78	2	.896	1
3280		min		-.608	1	-1.029	1	.024	2	1.143	1	.252	2

Envelope Plate/Shell Principal Stresses (Continued)

	Plate		Sur...	Sigma1 [ksi]	LC	Sigma2 [ksi]	LC	Tau Max [k...	LC	Angle [rad]	LC	Von Mises [ksi]	LC
3281	P821	max	T	.966	1	.482	1	.242	1	-.1	2	.837	1
3282		min		.249	2	.188	2	.031	2	-.33	1	.225	2
3283		max	B	-.173	2	-.251	2	.229	1	1.769	2	.822	1
3284		min		-.491	1	-.949	1	.039	2	1.286	1	.222	2
3285	P822	max	T	.898	1	.385	1	.257	1	-.028	2	.781	1
3286		min		.24	2	.153	2	.043	2	-.272	1	.211	2
3287		max	B	-.14	2	-.241	2	.245	1	1.753	2	.765	1
3288		min		-.393	1	-.882	1	.05	2	1.341	1	.209	2
3289	P823	max	T	.967	1	.485	1	.241	1	-.054	2	.837	1
3290		min		.261	2	.194	2	.033	2	-.37	1	.235	2
3291		max	B	-.184	2	-.263	2	.224	1	1.759	2	.823	1
3292		min		-.501	1	-.95	1	.039	2	1.237	1	.233	2
3293	P824	max	T	.902	1	.39	1	.256	1	-.009	2	.783	1
3294		min		.252	2	.158	2	.047	2	-.304	1	.22	2
3295		max	B	-.149	2	-.253	2	.241	1	1.738	2	.768	1
3296		min		-.404	1	-.886	1	.052	2	1.302	1	.22	2
3297	P825	max	T	.842	1	.299	1	.271	1	0	2	.739	1
3298		min		.232	2	.123	2	.055	2	-.228	1	.201	2
3299		max	B	-.112	2	-.231	2	.26	1	1.736	2	.723	1
3300		min		-.306	1	-.826	1	.06	2	1.381	1	.2	2
3301	P826	max	T	.793	1	.225	1	.284	1	.014	2	.708	1
3302		min		.224	2	.095	2	.064	2	-.193	1	.195	2
3303		max	B	-.087	2	-.222	2	.273	1	1.72	2	.691	1
3304		min		-.23	1	-.777	1	.067	2	1.412	1	.193	2
3305	P827	max	T	.847	1	.306	1	.271	1	.007	2	.743	1
3306		min		.243	2	.126	2	.059	2	-.255	1	.211	2
3307		max	B	-.119	2	-.243	2	.257	1	1.72	2	.727	1
3308		min		-.318	1	-.832	1	.062	2	1.35	1	.21	2
3309	P828	max	T	.8	1	.232	1	.284	1	.015	2	.713	1
3310		min		.235	2	.098	2	.068	2	-.217	1	.204	2
3311		max	B	-.093	2	-.233	2	.271	1	1.703	2	.696	1
3312		min		-.243	1	-.785	1	.07	2	1.385	1	.203	2
3313	P829	max	T	.751	1	.161	1	.295	1	.022	2	.685	1
3314		min		.217	2	.072	2	.072	2	-.165	1	.191	2
3315		max	B	-.065	2	-.213	2	.284	1	1.706	2	.667	1
3316		min		-.165	1	-.734	1	.074	2	1.436	1	.189	2
3317	P830	max	T	.714	1	.108	1	.303	1	.028	2	.667	1
3318		min		.21	2	.052	2	.079	2	-.142	1	.19	2
3319		max	B	-.047	2	-.205	2	.292	1	1.692	2	.648	1
3320		min		-.112	1	-.696	1	.079	2	1.454	1	.186	2
3321	P831	max	T	.76	1	.17	1	.295	1	.019	2	.691	1
3322		min		.227	2	.074	2	.076	2	-.187	1	.201	2
3323		max	B	-.071	2	-.224	2	.283	1	1.688	2	.673	1
3324		min		-.178	1	-.744	1	.077	2	1.412	1	.199	2
3325	P832	max	T	.725	1	.117	1	.304	1	.022	2	.674	1
3326		min		.22	2	.054	2	.083	2	-.162	1	.199	2
3327		max	B	-.052	2	-.216	2	.292	1	1.675	2	.656	1
3328		min		-.124	1	-.709	1	.082	2	1.433	1	.195	2
3329	P833	max	T	.683	1	.066	1	.309	1	.032	2	.653	1
3330		min		.205	2	.036	2	.084	2	-.124	1	.189	2
3331		max	B	-.032	2	-.197	2	.297	1	1.679	2	.632	1
3332		min		-.069	1	-.663	1	.083	2	1.468	1	.183	2
3333	P834	max	T	.656	1	.034	1	.311	1	.034	2	.64	1
3334		min		.199	2	.023	2	.088	2	-.109	1	.189	2
3335		max	B	-.021	2	-.191	2	.299	1	1.666	2	.617	1
3336		min		-.036	1	-.635	1	.085	2	1.478	1	.181	2
3337	P835	max	T	.695	1	.075	1	.31	1	.025	2	.661	1

Envelope Plate/Shell Principal Stresses (Continued)

	Plate		Sur...	Sigma1 [ksi]	LC	Sigma2 [ksi]	LC	Tau Max [k...	LC	Angle [rad]	LC	Von Mises [ksi]	LC
3338		min		.214	2	.038	2	.088	2	-.142	1	.198	2
3339		max	B	-.036	2	-.209	2	.299	1	1.662	2	.641	1
3340		min		-.08	1	-.678	1	.086	2	1.449	1	.193	2
3341	P836	max	T	.67	1	.042	1	.314	1	.027	2	.65	1
3342		min		.209	2	.025	2	.092	2	-.126	1	.197	2
3343		max	B	-.024	2	-.202	2	.302	1	1.65	2	.629	1
3344		min		-.046	1	-.651	1	.089	2	1.46	1	.192	2
3345	P837	max	T	.634	1	.013	2	.311	1	.035	2	.628	1
3346		min		.195	2	.012	1	.091	2	-.099	1	.188	2
3347		max	B	-.012	2	-.185	2	.298	1	1.651	2	.604	1
3348		min		-.014	1	-.611	1	.087	2	1.483	1	.18	2
3349	P838	max	T	.616	1	.006	2	.309	1	.033	2	.617	1
3350		min		.191	2	0	1	.092	2	-.093	1	.188	2
3351		max	B	0	1	-.181	2	.295	1	1.635	2	.591	1
3352		min		-.006	2	-.591	1	.088	2	1.485	1	.178	2
3353	P839	max	T	.649	1	.019	1	.315	1	.027	2	.64	1
3354		min		.204	2	.015	2	.095	2	-.114	1	.197	2
3355		max	B	-.014	2	-.197	2	.303	1	1.637	2	.618	1
3356		min		-.022	1	-.629	1	.091	2	1.467	1	.19	2
3357	P840	max	T	.633	1	.008	2	.315	1	.026	2	.631	1
3358		min		.2	2	.004	1	.096	2	-.105	1	.196	2
3359		max	B	-.006	1	-.193	2	.302	1	1.623	2	.608	1
3360		min		-.007	2	-.611	1	.093	2	1.471	1	.189	2
3361	P841	max	T	.604	1	.002	2	.304	1	.027	2	.606	1
3362		min		.188	2	-.005	1	.093	2	-.086	1	.186	2
3363		max	B	.004	1	-.178	2	.29	1	1.616	2	.579	1
3364		min		-.002	2	-.577	1	.088	2	1.487	1	.177	2
3365	P842	max	T	.596	1	0	2	.299	1	.013	2	.597	1
3366		min		.186	2	-.001	1	.093	2	-.05	1	.186	2
3367		max	B	.001	1	-.177	2	.284	1	1.589	2	.568	1
3368		min		0	2	-.567	1	.088	2	1.52	1	.177	2
3369	P843	max	T	.622	1	.003	2	.312	1	.023	2	.623	1
3370		min		.197	2	-.003	1	.097	2	-.095	1	.196	2
3371		max	B	.002	1	-.19	2	.3	1	1.608	2	.598	1
3372		min		-.003	2	-.597	1	.093	2	1.477	1	.188	2
3373	P844	max	T	.614	1	0	2	.308	1	.011	2	.615	1
3374		min		.196	2	-.002	1	.098	2	-.054	1	.195	2
3375		max	B	.002	1	-.189	2	.294	1	1.586	2	.588	1
3376		min		0	2	-.587	1	.094	2	1.516	1	.188	2
3377	P845	max	T	.681	1	0	2	.34	1	.056	1	.68	1
3378		min		.195	2	0	1	.097	2	-.005	2	.195	2
3379		max	B	0	1	-.19	2	.345	1	1.62	1	.69	1
3380		min		0	2	-.69	1	.095	2	1.55	2	.19	2
3381	P846	max	T	.693	1	.004	2	.345	1	.103	1	.691	1
3382		min		.197	2	.003	1	.097	2	-.004	2	.195	2
3383		max	B	-.002	2	-.192	2	.346	1	1.656	1	.694	1
3384		min		-.004	1	-.697	1	.095	2	1.52	2	.19	2
3385	P847	max	T	.675	1	0	2	.337	1	.057	1	.674	1
3386		min		.196	2	0	1	.098	2	-.004	2	.196	2
3387		max	B	0	2	-.197	2	.345	1	1.621	1	.691	1
3388		min		-.001	1	-.692	1	.098	2	1.552	2	.197	2
3389	P848	max	T	.687	1	.005	1	.341	1	.108	1	.685	1
3390		min		.198	2	.004	2	.097	2	0	2	.196	2
3391		max	B	-.003	2	-.198	2	.346	1	1.66	1	.696	1
3392		min		-.006	1	-.699	1	.098	2	1.526	2	.197	2
3393	P849	max	T	.707	1	.017	1	.345	1	.119	1	.699	1
3394		min		.199	2	.008	2	.096	2	.005	2	.195	2

Envelope Plate/Shell Principal Stresses (Continued)

	Plate		Sur...	Sigma1 [ksi]	LC	Sigma2 [ksi]	LC	Tau Max [k...	LC	Angle [rad]	LC	Von Mises [ksi]	LC
3395		max	B	-.006	2	-.195	2	.344	1	1.661	1	.697	1
3396		min		-.019	1	-.706	1	.094	2	1.498	2	.192	2
3397	P850	max	T	.726	1	.04	1	.343	1	.132	1	.707	1
3398		min		.203	2	.016	2	.094	2	.015	2	.196	2
3399		max	B	-.012	2	-.199	2	.339	1	1.664	1	.7	1
3400		min		-.042	1	-.72	1	.093	2	1.477	2	.193	2
3401	P851	max	T	.701	1	.02	1	.341	1	.127	1	.691	1
3402		min		.201	2	.009	2	.096	2	.009	2	.197	2
3403		max	B	-.007	2	-.201	2	.343	1	1.669	1	.696	1
3404		min		-.022	1	-.707	1	.097	2	1.506	2	.198	2
3405	P852	max	T	.719	1	.043	1	.338	1	.143	1	.698	1
3406		min		.205	2	.016	2	.094	2	.021	2	.197	2
3407		max	B	-.013	2	-.205	2	.337	1	1.675	1	.698	1
3408		min		-.046	1	-.72	1	.096	2	1.488	2	.199	2
3409	P853	max	T	.749	1	.071	1	.339	1	.148	1	.716	1
3410		min		.208	2	.026	2	.091	2	.026	2	.196	2
3411		max	B	-.02	2	-.205	2	.333	1	1.669	1	.706	1
3412		min		-.074	1	-.74	1	.092	2	1.457	2	.195	2
3413	P854	max	T	.778	1	.113	1	.332	1	.168	1	.728	1
3414		min		.214	2	.039	2	.087	2	.038	2	.197	2
3415		max	B	-.032	2	-.211	2	.324	1	1.678	1	.713	1
3416		min		-.116	1	-.764	1	.09	2	1.437	2	.197	2
3417	P855	max	T	.741	1	.075	1	.333	1	.161	1	.706	1
3418		min		.21	2	.026	2	.092	2	.033	2	.198	2
3419		max	B	-.022	2	-.211	2	.329	1	1.682	1	.701	1
3420		min		-.079	1	-.737	1	.095	2	1.47	2	.201	2
3421	P856	max	T	.767	1	.117	1	.325	1	.183	1	.716	1
3422		min		.216	2	.039	2	.088	2	.045	2	.199	2
3423		max	B	-.033	2	-.217	2	.319	1	1.693	1	.707	1
3424		min		-.122	1	-.759	1	.092	2	1.451	2	.203	2
3425	P857	max	T	.811	1	.164	1	.323	1	.193	1	.743	1
3426		min		.22	2	.055	2	.083	2	.053	2	.199	2
3427		max	B	-.046	2	-.219	2	.312	1	1.691	1	.723	1
3428		min		-.168	1	-.793	1	.087	2	1.414	2	.2	2
3429	P858	max	T	.85	1	.226	1	.312	1	.222	1	.762	1
3430		min		.228	2	.074	2	.077	2	.07	2	.201	2
3431		max	B	-.063	2	-.228	2	.297	1	1.708	1	.738	1
3432		min		-.232	1	-.826	1	.082	2	1.389	2	.203	2
3433	P859	max	T	.799	1	.168	1	.315	1	.209	1	.73	1
3434		min		.223	2	.055	2	.084	2	.059	2	.201	2
3435		max	B	-.048	2	-.225	2	.306	1	1.708	1	.715	1
3436		min		-.174	1	-.786	1	.089	2	1.429	2	.206	2
3437	P860	max	T	.835	1	.23	1	.303	1	.241	1	.748	1
3438		min		.231	2	.075	2	.078	2	.075	2	.204	2
3439		max	B	-.065	2	-.234	2	.289	1	1.728	1	.727	1
3440		min		-.238	1	-.817	1	.084	2	1.404	2	.209	2
3441	P861	max	T	.895	1	.299	1	.298	1	.259	1	.789	1
3442		min		.237	2	.097	2	.07	2	.094	2	.206	2
3443		max	B	-.084	2	-.237	2	.278	1	1.731	1	.759	1
3444		min		-.308	1	-.865	1	.077	2	1.358	2	.208	2
3445	P862	max	T	.948	1	.384	1	.282	1	.307	1	.826	1
3446		min		.246	2	.123	2	.062	2	.128	2	.213	2
3447		max	B	-.108	2	-.247	2	.256	1	1.764	1	.789	1
3448		min		-.397	1	-.909	1	.07	2	1.318	2	.215	2
3449	P863	max	T	.878	1	.302	1	.288	1	.282	1	.772	1
3450		min		.239	2	.098	2	.071	2	.096	2	.208	2
3451		max	B	-.086	2	-.244	2	.269	1	1.754	1	.746	1

Envelope Plate/Shell Principal Stresses (Continued)

	Plate		Sur...	Sigma1 [ksi]	LC	Sigma2 [ksi]	LC	Tau Max [k...	LC	Angle [rad]	LC	Von Mises [ksi]	LC
3452		min		-.313	1	-.852	1	.079	2	1.373	2	.214	2
3453	P864	max	T	.927	1	.384	1	.271	1	.333	1	.806	1
3454		min		.249	2	.124	2	.062	2	.126	2	.216	2
3455		max	B	-.111	2	-.255	2	.245	1	1.79	1	.774	1
3456		min		-.401	1	-.892	1	.072	2	1.331	2	.221	2
3457	P865	max	T	1.01	1	.479	1	.266	1	.369	1	.875	1
3458		min		.257	2	.153	2	.052	2	.185	2	.224	2
3459		max	B	-.136	2	-.258	2	.23	1	1.81	1	.831	1
3460		min		-.5	1	-.959	1	.061	2	1.261	2	.224	2
3461	P866	max	T	1.086	1	.584	1	.251	1	.453	1	.942	1
3462		min		.27	2	.185	2	.043	2	.29	2	.239	2
3463		max	B	-.167	2	-.271	2	.2	1	1.883	1	.888	1
3464		min		-.618	1	-1.018	1	.052	2	1.174	2	.237	2
3465	P867	max	T	.984	1	.477	1	.253	1	.402	1	.852	1
3466		min		.26	2	.155	2	.052	2	.176	2	.226	2
3467		max	B	-.138	2	-.267	2	.217	1	1.842	1	.812	1
3468		min		-.502	1	-.937	1	.064	2	1.273	2	.231	2
3469	P868	max	T	1.053	1	.58	1	.237	1	.495	1	.914	1
3470		min		.272	2	.189	2	.041	2	.27	2	.242	2
3471		max	B	-.17	2	-.281	2	.186	1	1.924	1	.865	1
3472		min		-.618	1	-.989	1	.055	2	1.182	2	.245	2
3473	P869	max	T	1.183	1	.697	1	.243	1	.568	1	1.03	1
3474		min		.29	2	.217	2	.036	2	.491	2	.261	2
3475		max	B	-.201	2	-.286	2	.171	1	2.008	1	.965	1
3476		min		-.748	1	-1.09	1	.043	2	1.022	2	.254	2
3477	P870	max	T	1.315	1	.808	1	.253	1	.773	2	1.149	1
3478		min		.323	2	.242	2	.04	2	.715	1	.291	2
3479		max	B	-.233	2	-.307	2	.154	1	2.226	1	1.07	1
3480		min		-.882	1	-1.191	1	.037	2	.749	2	.278	2
3481	P871	max	T	1.141	1	.688	1	.227	1	.625	1	.995	1
3482		min		.289	2	.226	2	.032	2	.478	2	.263	2
3483		max	B	-.203	2	-.298	2	.153	1	2.066	1	.937	1
3484		min		-.746	1	-1.052	1	.048	2	1.028	2	.264	2
3485	P872	max	T	1.262	1	.794	1	.234	1	.845	2	1.105	1
3486		min		.32	2	.254	2	.033	2	.797	1	.293	2
3487		max	B	-.234	2	-.325	2	.134	1	2.329	1	1.036	1
3488		min		-.875	1	-1.144	1	.045	2	.78	2	.29	2
3489	P873	max	T	1.506	1	.906	1	.3	1	.971	2	1.313	1
3490		min		.377	2	.254	2	.061	2	.877	1	.333	2
3491		max	B	-.254	2	-.346	2	.186	1	.4	2	1.219	1
3492		min		-.989	1	-1.361	1	.046	2	-.63	1	.31	2
3493	P874	max	T	1.788	1	.974	1	.407	1	1.049	2	1.551	1
3494		min		.452	2	.256	2	.098	2	1.014	1	.392	2
3495		max	B	-.256	2	-.409	2	.299	1	.156	2	1.438	1
3496		min		-1.042	1	-1.641	1	.076	2	-.426	1	.358	2
3497	P875	max	T	1.439	1	.881	1	.279	1	1.105	2	1.257	1
3498		min		.377	2	.265	2	.056	2	.993	1	.335	2
3499		max	B	-.253	2	-.37	2	.17	1	.496	2	1.175	1
3500		min		-.967	1	-1.307	1	.059	2	-.466	1	.327	2
3501	P876	max	T	1.706	1	.931	1	.388	1	1.206	2	1.479	1
3502		min		.458	2	.262	2	.098	2	1.167	1	.398	2
3503		max	B	-.254	2	-.442	2	.293	1	.304	2	1.387	1
3504		min		-.998	1	-1.584	1	.094	2	-.229	1	.384	2
3505	P877	max	T	1.489	1	.852	1	.319	1	2.133	1	1.294	1
3506		min		.44	2	.285	2	.078	2	1.826	2	.387	2
3507		max	B	-.29	2	-.424	2	.302	1	.538	1	1.285	1
3508		min		-.872	1	-1.475	1	.067	2	.204	2	.376	2

Envelope Plate/Shell Principal Stresses (Continued)

	Plate		Sur...	Sigma1 [ksi]	LC	Sigma2 [ksi]	LC	Tau Max [k...	LC	Angle [rad]	LC	Von Mises [ksi]	LC
3509	P878	max	T	1.266	1	.785	1	.241	1	2.303	1	1.107	1
3510		min		.361	2	.287	2	.037	2	1.838	2	.33	2
3511		max	B	-.293	2	-.349	2	.22	1	.715	1	1.099	1
3512		min		-.811	1	-1.251	1	.028	2	.11	2	.325	2
3513	P879	max	T	1.389	1	.807	1	.291	1	1.971	1	1.208	1
3514		min		.45	2	.291	2	.079	2	1.639	2	.395	2
3515		max	B	-.292	2	-.455	2	.287	1	.353	1	1.219	1
3516		min		-.827	1	-1.4	1	.082	2	.012	2	.4	2
3517	P880	max	T	1.188	1	.758	1	.215	1	2.191	1	1.042	1
3518		min		.364	2	.296	2	.034	2	1.62	2	.335	2
3519		max	B	-.295	2	-.371	2	.2	1	.569	1	1.046	1
3520		min		-.786	1	-1.187	1	.038	2	-.095	2	.34	2
3521	P881	max	T	1.122	1	.689	1	.216	1	2.165	2	.98	1
3522		min		.3	2	.281	2	.01	2	-.658	1	.291	2
3523		max	B	-.283	2	-.294	2	.194	1	.913	1	.97	1
3524		min		-.717	1	-1.104	1	.005	2	-.701	2	.288	2
3525	P882	max	T	1.023	1	.584	1	.22	1	-.096	2	.889	1
3526		min		.279	2	.241	2	.019	2	-.513	1	.262	2
3527		max	B	-.236	2	-.282	2	.197	1	1.836	2	.878	1
3528		min		-.611	1	-1.006	1	.023	2	1.075	1	.262	2
3529	P883	max	T	1.063	1	.672	1	.196	1	1.584	2	.931	1
3530		min		.297	2	.293	2	.002	2	-.73	1	.295	2
3531		max	B	-.284	2	-.312	2	.172	1	.81	1	.928	1
3532		min		-.708	1	-1.051	1	.014	2	-.582	2	.299	2
3533	P884	max	T	.979	1	.572	1	.203	1	.024	2	.852	1
3534		min		.286	2	.242	2	.022	2	-.563	1	.267	2
3535		max	B	-.243	2	-.29	2	.176	1	1.924	2	.843	1
3536		min		-.609	1	-.962	1	.024	2	1.006	1	.27	2
3537	P885	max	T	.949	1	.483	1	.233	1	-.013	2	.822	1
3538		min		.27	2	.197	2	.036	2	-.409	1	.242	2
3539		max	B	-.193	2	-.272	2	.212	1	1.767	2	.808	1
3540		min		-.508	1	-.932	1	.039	2	1.187	1	.242	2
3541	P886	max	T	.889	1	.39	1	.249	1	.004	2	.772	1
3542		min		.261	2	.16	2	.051	2	-.336	1	.228	2
3543		max	B	-.157	2	-.262	2	.231	1	1.732	2	.757	1
3544		min		-.412	1	-.873	1	.052	2	1.265	1	.228	2
3545	P887	max	T	.915	1	.475	1	.22	1	.016	2	.792	1
3546		min		.277	2	.197	2	.04	2	-.448	1	.247	2
3547		max	B	-.2	2	-.279	2	.194	1	1.787	2	.779	1
3548		min		-.509	1	-.897	1	.04	2	1.14	1	.249	2
3549	P888	max	T	.862	1	.386	1	.238	1	.011	2	.748	1
3550		min		.267	2	.159	2	.054	2	-.368	1	.232	2
3551		max	B	-.162	2	-.268	2	.215	1	1.733	2	.732	1
3552		min		-.416	1	-.845	1	.053	2	1.23	1	.233	2
3553	P889	max	T	.838	1	.308	1	.265	1	.01	2	.735	1
3554		min		.252	2	.127	2	.062	2	-.282	1	.218	2
3555		max	B	-.125	2	-.251	2	.248	1	1.709	2	.718	1
3556		min		-.327	1	-.823	1	.063	2	1.32	1	.218	2
3557	P890	max	T	.795	1	.236	1	.279	1	.012	2	.707	1
3558		min		.243	2	.099	2	.072	2	-.241	1	.211	2
3559		max	B	-.098	2	-.242	2	.264	1	1.69	2	.69	1
3560		min		-.252	1	-.78	1	.072	2	1.36	1	.211	2
3561	P891	max	T	.817	1	.306	1	.255	1	.008	2	.715	1
3562		min		.257	2	.127	2	.065	2	-.31	1	.223	2
3563		max	B	-.129	2	-.257	2	.235	1	1.703	2	.697	1
3564		min		-.332	1	-.801	1	.064	2	1.292	1	.223	2
3565	P892	max	T	.777	1	.236	1	.27	1	.006	2	.69	1

Envelope Plate/Shell Principal Stresses (Continued)

	Plate		Sur...	Sigma1 [ksi]	LC	Sigma2 [ksi]	LC	Tau Max [k...	LC	Angle [rad]	LC	Von Mises [ksi]	LC
3566		min		.248	2	.099	2	.074	2	-.265	1	.216	2
3567		max	B	-.101	2	-.247	2	.252	1	1.681	2	.672	1
3568		min		-.258	1	-.763	1	.073	2	1.336	1	.215	2
3569	P893	max	T	.757	1	.175	1	.291	1	.014	2	.687	1
3570		min		.235	2	.076	2	.08	2	-.208	1	.208	2
3571		max	B	-.075	2	-.233	2	.277	1	1.675	2	.669	1
3572		min		-.188	1	-.742	1	.079	2	1.39	1	.206	2
3573	P894	max	T	.724	1	.123	1	.301	1	.016	2	.671	1
3574		min		.227	2	.056	2	.086	2	-.182	1	.205	2
3575		max	B	-.055	2	-.224	2	.288	1	1.662	2	.653	1
3576		min		-.133	1	-.709	1	.085	2	1.413	1	.203	2
3577	P895	max	T	.743	1	.176	1	.283	1	.006	2	.672	1
3578		min		.239	2	.075	2	.082	2	-.23	1	.212	2
3579		max	B	-.077	2	-.238	2	.267	1	1.665	2	.654	1
3580		min		-.194	1	-.729	1	.08	2	1.37	1	.21	2
3581	P896	max	T	.712	1	.126	1	.293	1	.007	2	.659	1
3582		min		.231	2	.055	2	.088	2	-.201	1	.209	2
3583		max	B	-.057	2	-.23	2	.28	1	1.651	2	.641	1
3584		min		-.14	1	-.699	1	.086	2	1.395	1	.207	2
3585	P897	max	T	.696	1	.081	1	.307	1	.018	2	.659	1
3586		min		.221	2	.039	2	.091	2	-.16	1	.204	2
3587		max	B	-.039	2	-.217	2	.296	1	1.649	2	.641	1
3588		min		-.089	1	-.681	1	.089	2	1.431	1	.2	2
3589	P898	max	T	.672	1	.048	1	.312	1	.019	2	.65	1
3590		min		.215	2	.026	2	.095	2	-.142	1	.203	2
3591		max	B	-.026	2	-.211	2	.301	1	1.638	2	.631	1
3592		min		-.054	1	-.656	1	.092	2	1.444	1	.199	2
3593	P899	max	T	.686	1	.084	1	.301	1	.009	2	.648	1
3594		min		.224	2	.039	2	.093	2	-.177	1	.208	2
3595		max	B	-.041	2	-.222	2	.289	1	1.639	2	.631	1
3596		min		-.095	1	-.673	1	.091	2	1.415	1	.205	2
3597	P900	max	T	.665	1	.052	1	.306	1	.011	2	.64	1
3598		min		.218	2	.026	2	.096	2	-.158	1	.207	2
3599		max	B	-.027	2	-.216	2	.296	1	1.628	2	.623	1
3600		min		-.059	1	-.651	1	.094	2	1.43	1	.204	2
3601	P901	max	T	.653	1	.024	1	.315	1	.021	2	.642	1
3602		min		.21	2	.016	2	.097	2	-.128	1	.203	2
3603		max	B	-.016	2	-.205	2	.304	1	1.627	2	.622	1
3604		min		-.028	1	-.635	1	.095	2	1.454	1	.198	2
3605	P902	max	T	.639	1	.008	2	.316	1	.021	2	.635	1
3606		min		.207	2	.007	1	.099	2	-.117	1	.203	2
3607		max	B	-.009	2	-.201	2	.305	1	1.615	2	.614	1
3608		min		-.01	1	-.619	1	.096	2	1.46	1	.197	2
3609	P903	max	T	.647	1	.027	1	.31	1	.013	2	.634	1
3610		min		.213	2	.016	2	.099	2	-.142	1	.206	2
3611		max	B	-.017	2	-.211	2	.3	1	1.618	2	.616	1
3612		min		-.032	1	-.632	1	.097	2	1.441	1	.203	2
3613	P904	max	T	.633	1	.01	1	.312	1	.016	2	.629	1
3614		min		.21	2	.008	2	.101	2	-.127	1	.206	2
3615		max	B	-.009	2	-.206	2	.302	1	1.609	2	.61	1
3616		min		-.013	1	-.617	1	.099	2	1.451	1	.202	2
3617	P905	max	T	.628	1	.003	2	.315	1	.019	2	.629	1
3618		min		.204	2	-.001	1	.1	2	-.103	1	.202	2
3619		max	B	0	1	-.198	2	.303	1	1.603	2	.606	1
3620		min		-.004	2	-.606	1	.097	2	1.469	1	.197	2
3621	P906	max	T	.62	1	0	2	.31	1	.01	2	.62	1
3622		min		.203	2	0	1	.101	2	-.057	1	.202	2

Envelope Plate/Shell Principal Stresses (Continued)

	Plate		Sur...	Sigma1 [ksi]	LC	Sigma2 [ksi]	LC	Tau Max [k...	LC	Angle [rad]	LC	Von Mises [ksi]	LC
3623		max	B	0	1	-.197	2	.298	1	1.585	2	.596	1
3624		min		0	2	-.596	1	.098	2	1.513	1	.196	2
3625	P907	max	T	.624	1	.003	2	.312	1	.016	2	.624	1
3626		min		.207	2	0	1	.102	2	-.11	1	.206	2
3627		max	B	-.001	1	-.204	2	.302	1	1.599	2	.604	1
3628		min		-.004	2	-.605	1	.1	2	1.463	1	.202	2
3629	P908	max	T	.616	1	0	2	.308	1	.01	2	.616	1
3630		min		.206	2	0	1	.103	2	-.059	1	.206	2
3631		max	B	0	1	-.202	2	.297	1	1.584	2	.593	1
3632		min		0	2	-.593	1	.1	2	1.511	1	.201	2
3633	P909	max	T	.658	1	.001	1	.328	1	.059	1	.657	1
3634		min		.194	2	0	2	.097	2	-.004	2	.194	2
3635		max	B	0	2	-.201	2	.34	1	1.622	1	.681	1
3636		min		-.001	1	-.682	1	.1	2	1.553	2	.2	2
3637	P910	max	T	.67	1	.006	1	.332	1	.112	1	.668	1
3638		min		.196	2	.003	2	.096	2	.002	2	.194	2
3639		max	B	-.003	2	-.202	2	.341	1	1.664	1	.685	1
3640		min		-.007	1	-.689	1	.1	2	1.53	2	.201	2
3641	P911	max	T	.63	1	.001	1	.314	1	.061	1	.629	1
3642		min		.189	2	0	2	.094	2	-.003	2	.189	2
3643		max	B	0	2	-.201	2	.33	1	1.623	1	.66	1
3644		min		-.002	1	-.661	1	.1	2	1.554	2	.201	2
3645	P912	max	T	.642	1	.006	1	.318	1	.118	1	.64	1
3646		min		.191	2	.003	2	.094	2	.006	2	.189	2
3647		max	B	-.002	2	-.202	2	.33	1	1.669	1	.664	1
3648		min		-.007	1	-.668	1	.1	2	1.534	2	.201	2
3649	P913	max	T	.683	1	.021	1	.331	1	.134	1	.673	1
3650		min		.199	2	.008	2	.095	2	.015	2	.195	2
3651		max	B	-.007	2	-.205	2	.336	1	1.676	1	.685	1
3652		min		-.024	1	-.696	1	.099	2	1.514	2	.202	2
3653	P914	max	T	.7	1	.045	1	.328	1	.153	1	.679	1
3654		min		.203	2	.016	2	.094	2	.028	2	.196	2
3655		max	B	-.013	2	-.209	2	.33	1	1.685	1	.685	1
3656		min		-.049	1	-.708	1	.098	2	1.498	2	.203	2
3657	P915	max	T	.655	1	.021	1	.317	1	.143	1	.645	1
3658		min		.194	2	.008	2	.093	2	.021	2	.19	2
3659		max	B	-.006	2	-.205	2	.325	1	1.683	1	.663	1
3660		min		-.024	1	-.675	1	.099	2	1.521	2	.202	2
3661	P916	max	T	.671	1	.045	1	.313	1	.165	1	.65	1
3662		min		.199	2	.015	2	.092	2	.036	2	.192	2
3663		max	B	-.013	2	-.209	2	.318	1	1.694	1	.662	1
3664		min		-.049	1	-.685	1	.098	2	1.507	2	.203	2
3665	P917	max	T	.721	1	.077	1	.322	1	.174	1	.686	1
3666		min		.209	2	.026	2	.091	2	.041	2	.197	2
3667		max	B	-.022	2	-.214	2	.321	1	1.695	1	.686	1
3668		min		-.082	1	-.724	1	.096	2	1.481	2	.204	2
3669	P918	max	T	.746	1	.118	1	.314	1	.198	1	.694	1
3670		min		.215	2	.038	2	.088	2	.053	2	.198	2
3671		max	B	-.034	2	-.221	2	.309	1	1.708	1	.69	1
3672		min		-.125	1	-.743	1	.094	2	1.463	2	.206	2
3673	P919	max	T	.691	1	.076	1	.307	1	.187	1	.656	1
3674		min		.204	2	.024	2	.09	2	.05	2	.193	2
3675		max	B	-.021	2	-.214	2	.308	1	1.706	1	.662	1
3676		min		-.082	1	-.699	1	.096	2	1.492	2	.205	2
3677	P920	max	T	.714	1	.117	1	.299	1	.213	1	.663	1
3678		min		.211	2	.037	2	.087	2	.064	2	.195	2
3679		max	B	-.033	2	-.221	2	.296	1	1.721	1	.663	1

Envelope Plate/Shell Principal Stresses (Continued)

	Plate		Sur...	Sigma1 [ksi]	LC	Sigma2 [ksi]	LC	Tau Max [k...	LC	Angle [rad]	LC	Von Mises [ksi]	LC
3680		min		-.125	1	-.717	1	.094	2	1.474	2	.206	2
3681	P921	max	T	.775	1	.169	1	.303	1	.226	1	.706	1
3682		min		.222	2	.054	2	.084	2	.067	2	.201	2
3683		max	B	-.048	2	-.228	2	.295	1	1.724	1	.696	1
3684		min		-.177	1	-.767	1	.09	2	1.442	2	.209	2
3685	P922	max	T	.809	1	.229	1	.29	1	.261	1	.722	1
3686		min		.23	2	.074	2	.078	2	.082	2	.204	2
3687		max	B	-.066	2	-.237	2	.277	1	1.746	1	.706	1
3688		min		-.24	1	-.795	1	.086	2	1.417	2	.212	2
3689	P923	max	T	.741	1	.166	1	.287	1	.243	1	.673	1
3690		min		.218	2	.052	2	.083	2	.077	2	.198	2
3691		max	B	-.048	2	-.229	2	.281	1	1.74	1	.667	1
3692		min		-.176	1	-.737	1	.09	2	1.453	2	.209	2
3693	P924	max	T	.771	1	.225	1	.273	1	.28	1	.687	1
3694		min		.227	2	.071	2	.078	2	.091	2	.201	2
3695		max	B	-.066	2	-.238	2	.262	1	1.763	1	.675	1
3696		min		-.238	1	-.761	1	.086	2	1.428	2	.213	2
3697	P925	max	T	.847	1	.299	1	.274	1	.304	1	.744	1
3698		min		.239	2	.097	2	.071	2	.101	2	.208	2
3699		max	B	-.087	2	-.247	2	.256	1	1.775	1	.722	1
3700		min		-.314	1	-.826	1	.08	2	1.385	2	.217	2
3701	P926	max	T	.891	1	.38	1	.256	1	.36	1	.775	1
3702		min		.249	2	.124	2	.063	2	.127	2	.216	2
3703		max	B	-.112	2	-.259	2	.23	1	1.815	1	.746	1
3704		min		-.4	1	-.861	1	.074	2	1.344	2	.225	2
3705	P927	max	T	.805	1	.293	1	.256	1	.327	1	.706	1
3706		min		.236	2	.094	2	.071	2	.109	2	.206	2
3707		max	B	-.087	2	-.248	2	.239	1	1.795	1	.688	1
3708		min		-.311	1	-.788	1	.081	2	1.397	2	.218	2
3709	P928	max	T	.844	1	.37	1	.237	1	.387	1	.733	1
3710		min		.246	2	.121	2	.062	2	.131	2	.213	2
3711		max	B	-.111	2	-.26	2	.212	1	1.837	1	.709	1
3712		min		-.394	1	-.818	1	.074	2	1.355	2	.226	2
3713	P929	max	T	.942	1	.47	1	.236	1	.434	1	.816	1
3714		min		.259	2	.155	2	.052	2	.168	2	.226	2
3715		max	B	-.139	2	-.272	2	.201	1	1.871	1	.781	1
3716		min		-.499	1	-.9	1	.066	2	1.284	2	.235	2
3717	P930	max	T	1.003	1	.568	1	.217	1	.537	1	.871	1
3718		min		.271	2	.191	2	.04	2	.246	2	.241	2
3719		max	B	-.17	2	-.287	2	.167	1	1.96	1	.829	1
3720		min		-.611	1	-.944	1	.059	2	1.192	2	.25	2
3721	P931	max	T	.888	1	.457	1	.216	1	.467	1	.769	1
3722		min		.256	2	.152	2	.052	2	.164	2	.223	2
3723		max	B	-.138	2	-.273	2	.181	1	1.898	1	.74	1
3724		min		-.489	1	-.851	1	.068	2	1.296	2	.237	2
3725	P932	max	T	.94	1	.55	1	.195	1	.579	1	.818	1
3726		min		.267	2	.188	2	.039	2	.223	2	.238	2
3727		max	B	-.168	2	-.29	2	.145	1	1.994	1	.783	1
3728		min		-.596	1	-.887	1	.061	2	1.207	2	.253	2
3729	P933	max	T	1.08	1	.671	1	.204	1	.683	1	.944	1
3730		min		.285	2	.23	2	.027	2	.437	2	.262	2
3731		max	B	-.202	2	-.308	2	.131	1	2.12	1	.895	1
3732		min		-.735	1	-.996	1	.053	2	1.045	2	.271	2
3733	P934	max	T	1.184	1	.769	1	.207	1	.906	2	1.041	1
3734		min		.312	2	.263	2	.024	2	.879	1	.291	2
3735		max	B	-.231	2	-.338	2	.109	1	.831	2	.983	1
3736		min		-.856	1	-1.074	1	.054	2	-.706	1	.3	2

Envelope Plate/Shell Principal Stresses (Continued)

	Plate		Sur...	Sigma1 [ksi]	LC	Sigma2 [ksi]	LC	Tau Max [k...	LC	Angle [rad]	LC	Von Mises [ksi]	LC
3737	P935	max	T	1.005	1	.645	1	.18	1	.739	1	.882	1
3738		min		.279	2	.229	2	.025	2	.37	2	.258	2
3739		max	B	-.199	2	-.313	2	.108	1	2.171	1	.841	1
3740		min		-.713	1	-.928	1	.057	2	1.072	2	.274	2
3741	P936	max	T	1.091	1	.734	1	.179	1	.955	1	.964	1
3742		min		.299	2	.268	2	.016	2	.923	2	.285	2
3743		max	B	-.226	2	-.347	2	.085	1	.893	2	.92	1
3744		min		-.823	1	-.993	1	.06	2	-.597	1	.305	2
3745	P937	max	T	1.337	1	.845	1	.246	1	1.258	2	1.171	1
3746		min		.369	2	.275	2	.047	2	1.105	1	.332	2
3747		max	B	-.25	2	-.388	2	.146	1	.608	2	1.107	1
3748		min		-.932	1	-1.224	1	.069	2	-.301	1	.341	2
3749	P938	max	T	1.563	1	.876	1	.344	1	1.377	2	1.357	1
3750		min		.453	2	.27	2	.091	2	1.308	1	.394	2
3751		max	B	-.253	2	-.463	2	.264	1	.458	2	1.288	1
3752		min		-.94	1	-1.467	1	.105	2	-.05	1	.402	2
3753	P939	max	T	1.215	1	.797	1	.209	1	1.421	2	1.069	1
3754		min		.354	2	.281	2	.036	2	1.206	1	.324	2
3755		max	B	-.245	2	-.398	2	.123	1	.718	2	1.024	1
3756		min		-.88	1	-1.125	1	.076	2	-.143	1	.347	2
3757	P940	max	T	1.397	1	.818	1	.289	1	1.553	2	1.215	1
3758		min		.434	2	.278	2	.078	2	1.429	1	.381	2
3759		max	B	-.255	2	-.472	2	.225	1	.603	2	1.173	1
3760		min		-.882	1	-1.332	1	.108	2	.102	1	.409	2
3761	P941	max	T	1.243	1	.755	1	.244	1	1.826	1	1.085	1
3762		min		.447	2	.296	2	.076	2	1.436	2	.394	2
3763		max	B	-.293	2	-.475	2	.255	1	.185	1	1.118	1
3764		min		-.771	1	-1.282	1	.091	2	-.169	2	.415	2
3765	P942	max	T	1.085	1	.724	1	.18	1	2.089	1	.957	1
3766		min		.362	2	.3	2	.031	2	1.354	2	.335	2
3767		max	B	-.294	2	-.387	2	.173	1	.421	1	.974	1
3768		min		-.754	1	-1.1	1	.047	2	-.279	2	.35	2
3769	P943	max	T	1.09	1	.707	1	.191	1	1.706	1	.957	1
3770		min		.434	2	.3	2	.067	2	1.223	2	.385	2
3771		max	B	-.293	2	-.48	2	.219	1	.037	1	1.01	1
3772		min		-.717	1	-1.155	1	.094	2	-.336	2	.419	2
3773	P944	max	T	.971	1	.682	1	.144	1	2.006	1	.864	1
3774		min		.356	2	.297	2	.029	2	1.066	2	.33	2
3775		max	B	-.288	2	-.395	2	.145	1	.275	1	.893	1
3776		min		-.711	1	-1.002	1	.054	2	-.437	2	.354	2
3777	P945	max	T	.986	1	.647	1	.17	1	2.347	1	.868	1
3778		min		.304	2	.287	2	.009	2	.587	2	.296	2
3779		max	B	-.28	2	-.326	2	.145	1	.703	1	.871	1
3780		min		-.69	1	-.979	1	.023	2	-.631	2	.306	2
3781	P946	max	T	.919	1	.553	1	.183	1	.09	2	.802	1
3782		min		.291	2	.238	2	.026	2	-.608	1	.268	2
3783		max	B	-.245	2	-.297	2	.151	1	2.004	2	.796	1
3784		min		-.601	1	-.903	1	.026	2	.939	1	.275	2
3785	P947	max	T	.9	1	.614	1	.143	1	2.296	1	.796	1
3786		min		.309	2	.275	2	.017	2	.438	2	.293	2
3787		max	B	-.273	2	-.335	2	.117	1	.591	1	.807	1
3788		min		-.665	1	-.898	1	.031	2	-.704	2	.309	2
3789	P948	max	T	.851	1	.528	1	.162	1	.103	2	.744	1
3790		min		.293	2	.23	2	.032	2	-.647	1	.267	2
3791		max	B	-.241	2	-.302	2	.123	1	2.05	2	.741	1
3792		min		-.586	1	-.833	1	.03	2	.872	1	.276	2
3793	P949	max	T	.867	1	.461	1	.203	1	.029	2	.752	1

Envelope Plate/Shell Principal Stresses (Continued)

	Plate		Sur...	Sigma1 [ksi]	LC	Sigma2 [ksi]	LC	Tau Max [k...	LC	Angle [rad]	LC	Von Mises [ksi]	LC
3794		min		.28	2	.194	2	.043	2	-.484	1	.249	2
3795		max	B	-.202	2	-.283	2	.171	1	1.814	2	.739	1
3796		min		-.506	1	-.848	1	.04	2	1.096	1	.252	2
3797	P950	max	T	.823	1	.376	1	.224	1	.009	2	.714	1
3798		min		.27	2	.156	2	.057	2	-.398	1	.234	2
3799		max	B	-.164	2	-.271	2	.195	1	1.74	2	.697	1
3800		min		-.415	1	-.805	1	.053	2	1.197	1	.236	2
3801	P951	max	T	.811	1	.442	1	.184	1	.025	2	.703	1
3802		min		.281	2	.188	2	.046	2	-.517	1	.248	2
3803		max	B	-.201	2	-.284	2	.146	1	1.841	2	.691	1
3804		min		-.497	1	-.789	1	.041	2	1.055	1	.253	2
3805	P952	max	T	.775	1	.361	1	.207	1	-.002	2	.671	1
3806		min		.269	2	.151	2	.059	2	-.428	1	.233	2
3807		max	B	-.164	2	-.27	2	.172	1	1.749	2	.654	1
3808		min		-.41	1	-.754	1	.053	2	1.169	1	.236	2
3809	P953	max	T	.784	1	.3	1	.242	1	0	2	.685	1
3810		min		.259	2	.124	2	.067	2	-.336	1	.224	2
3811		max	B	-.132	2	-.26	2	.217	1	1.7	2	.667	1
3812		min		-.333	1	-.767	1	.064	2	1.266	1	.225	2
3813	P954	max	T	.749	1	.232	1	.258	1	-.003	2	.664	1
3814		min		.249	2	.097	2	.076	2	-.289	1	.218	2
3815		max	B	-.103	2	-.249	2	.237	1	1.675	2	.645	1
3816		min		-.261	1	-.734	1	.073	2	1.315	1	.217	2
3817	P955	max	T	.742	1	.289	1	.226	1	-.013	2	.648	1
3818		min		.258	2	.12	2	.069	2	-.362	1	.223	2
3819		max	B	-.132	2	-.259	2	.197	1	1.701	2	.628	1
3820		min		-.331	1	-.724	1	.064	2	1.245	1	.224	2
3821	P956	max	T	.712	1	.225	1	.243	1	-.017	2	.63	1
3822		min		.247	2	.093	2	.077	2	-.312	1	.216	2
3823		max	B	-.103	2	-.248	2	.219	1	1.672	2	.61	1
3824		min		-.259	1	-.697	1	.073	2	1.297	1	.216	2
3825	P957	max	T	.718	1	.174	1	.272	1	-.004	2	.649	1
3826		min		.24	2	.074	2	.083	2	-.251	1	.213	2
3827		max	B	-.079	2	-.24	2	.254	1	1.657	2	.63	1
3828		min		-.197	1	-.705	1	.081	2	1.352	1	.212	2
3829	P958	max	T	.691	1	.125	1	.283	1	-.003	2	.637	1
3830		min		.232	2	.054	2	.089	2	-.22	1	.21	2
3831		max	B	-.058	2	-.232	2	.268	1	1.643	2	.62	1
3832		min		-.143	1	-.679	1	.087	2	1.379	1	.209	2
3833	P959	max	T	.685	1	.169	1	.258	1	-.018	2	.618	1
3834		min		.238	2	.071	2	.084	2	-.273	1	.212	2
3835		max	B	-.079	2	-.239	2	.237	1	1.651	2	.598	1
3836		min		-.197	1	-.672	1	.08	2	1.336	1	.211	2
3837	P960	max	T	.66	1	.122	1	.269	1	-.017	2	.608	1
3838		min		.229	2	.052	2	.089	2	-.24	1	.208	2
3839		max	B	-.058	2	-.231	2	.253	1	1.636	2	.591	1
3840		min		-.144	1	-.649	1	.086	2	1.365	1	.208	2
3841	P961	max	T	.667	1	.085	1	.291	1	-.001	2	.629	1
3842		min		.225	2	.038	2	.093	2	-.195	1	.208	2
3843		max	B	-.041	2	-.224	2	.278	1	1.631	2	.612	1
3844		min		-.099	1	-.655	1	.091	2	1.401	1	.207	2
3845	P962	max	T	.647	1	.053	1	.297	1	.002	2	.622	1
3846		min		.218	2	.025	2	.097	2	-.174	1	.207	2
3847		max	B	-.028	2	-.218	2	.286	1	1.62	2	.606	1
3848		min		-.063	1	-.635	1	.095	2	1.417	1	.206	2
3849	P963	max	T	.639	1	.082	1	.278	1	-.014	2	.602	1
3850		min		.222	2	.036	2	.093	2	-.213	1	.206	2

Envelope Plate/Shell Principal Stresses (Continued)

	Plate		Sur...	Sigma1 [ksi]	LC	Sigma2 [ksi]	LC	Tau Max [k...	LC	Angle [rad]	LC	Von Mises [ksi]	LC
3851		max	B	-.041	2	-.223	2	.265	1	1.623	2	.586	1
3852		min		-.099	1	-.629	1	.091	2	1.387	1	.206	2
3853	P964	max	T	.62	1	.051	1	.285	1	-.01	2	.596	1
3854		min		.215	2	.023	2	.096	2	-.19	1	.204	2
3855		max	B	-.027	2	-.217	2	.274	1	1.613	2	.582	1
3856		min		-.063	1	-.611	1	.095	2	1.405	1	.205	2
3857	P965	max	T	.63	1	.028	1	.301	1	.005	2	.617	1
3858		min		.213	2	.015	2	.099	2	-.155	1	.206	2
3859		max	B	-.017	2	-.213	2	.292	1	1.612	2	.602	1
3860		min		-.035	1	-.618	1	.098	2	1.43	1	.205	2
3861	P966	max	T	.618	1	.011	1	.304	1	.01	2	.613	1
3862		min		.21	2	.008	2	.101	2	-.138	1	.206	2
3863		max	B	-.009	2	-.208	2	.295	1	1.604	2	.597	1
3864		min		-.015	1	-.604	1	.1	2	1.442	1	.204	2
3865	P967	max	T	.605	1	.027	1	.289	1	-.004	2	.592	1
3866		min		.21	2	.014	2	.098	2	-.169	1	.203	2
3867		max	B	-.017	2	-.211	2	.28	1	1.606	2	.579	1
3868		min		-.035	1	-.595	1	.097	2	1.42	1	.204	2
3869	P968	max	T	.593	1	.01	1	.292	1	.003	2	.588	1
3870		min		.206	2	.007	2	.099	2	-.15	1	.202	2
3871		max	B	-.009	2	-.207	2	.284	1	1.599	2	.575	1
3872		min		-.015	1	-.582	1	.099	2	1.433	1	.203	2
3873	P969	max	T	.609	1	.003	2	.304	1	.013	2	.609	1
3874		min		.207	2	0	1	.102	2	-.118	1	.206	2
3875		max	B	-.002	1	-.205	2	.295	1	1.597	2	.592	1
3876		min		-.004	2	-.593	1	.101	2	1.457	1	.204	2
3877	P970	max	T	.601	1	0	2	.301	1	.009	2	.601	1
3878		min		.206	2	0	1	.103	2	-.062	1	.206	2
3879		max	B	0	1	-.203	2	.291	1	1.584	2	.581	1
3880		min		0	2	-.581	1	.101	2	1.508	1	.203	2
3881	P971	max	T	.585	1	.003	2	.292	1	.009	2	.585	1
3882		min		.204	2	0	1	.1	2	-.126	1	.202	2
3883		max	B	-.002	1	-.204	2	.285	1	1.594	2	.57	1
3884		min		-.004	2	-.572	1	.1	2	1.45	1	.202	2
3885	P972	max	T	.577	1	0	2	.288	1	.008	2	.577	1
3886		min		.203	2	0	1	.101	2	-.066	1	.202	2
3887		max	B	0	1	-.202	2	.28	1	1.583	2	.56	1
3888		min		0	2	-.56	1	.1	2	1.506	1	.201	2
3889	P973	max	T	.592	1	.001	1	.295	1	.063	1	.591	1
3890		min		.181	2	0	2	.09	2	-.001	2	.181	2
3891		max	B	0	2	-.198	2	.314	1	1.625	1	.629	1
3892		min		-.002	1	-.63	1	.099	2	1.556	2	.198	2
3893	P974	max	T	.604	1	.005	1	.3	1	.125	1	.602	1
3894		min		.182	2	.003	2	.09	2	.012	2	.181	2
3895		max	B	-.002	2	-.199	2	.314	1	1.674	1	.633	1
3896		min		-.007	1	-.636	1	.099	2	1.539	2	.199	2
3897	P975	max	T	.544	1	0	1	.272	1	.068	1	.544	1
3898		min		.169	2	0	2	.084	2	.002	2	.169	2
3899		max	B	0	2	-.192	2	.293	1	1.628	1	.588	1
3900		min		-.001	1	-.588	1	.096	2	1.558	2	.192	2
3901	P976	max	T	.557	1	.003	1	.277	1	.135	1	.555	1
3902		min		.171	2	.002	2	.085	2	.02	2	.17	2
3903		max	B	-.001	2	-.193	2	.295	1	1.68	1	.592	1
3904		min		-.006	1	-.595	1	.096	2	1.545	2	.193	2
3905	P977	max	T	.617	1	.019	1	.299	1	.154	1	.608	1
3906		min		.186	2	.006	2	.09	2	.03	2	.183	2
3907		max	B	-.005	2	-.202	2	.31	1	1.691	1	.631	1

Envelope Plate/Shell Principal Stresses (Continued)

	Plate		Sur...	Sigma1 [ksi]	LC	Sigma2 [ksi]	LC	Tau Max [k...	LC	Angle [rad]	LC	Von Mises [ksi]	LC
3908		min		-.023	1	-.643	1	.098	2	1.528	2	.199	2
3909	P978	max	T	.632	1	.042	1	.295	1	.178	1	.613	1
3910		min		.191	2	.013	2	.089	2	.048	2	.185	2
3911		max	B	-.011	2	-.206	2	.302	1	1.704	1	.63	1
3912		min		-.047	1	-.652	1	.097	2	1.516	2	.201	2
3913	P979	max	T	.57	1	.016	1	.277	1	.167	1	.562	1
3914		min		.175	2	.005	2	.085	2	.041	2	.172	2
3915		max	B	-.004	2	-.196	2	.291	1	1.701	1	.592	1
3916		min		-.02	1	-.601	1	.096	2	1.534	2	.194	2
3917	P980	max	T	.585	1	.037	1	.274	1	.193	1	.568	1
3918		min		.18	2	.01	2	.085	2	.063	2	.175	2
3919		max	B	-.01	2	-.2	2	.283	1	1.716	1	.59	1
3920		min		-.043	1	-.61	1	.095	2	1.525	2	.195	2
3921	P981	max	T	.651	1	.072	1	.289	1	.202	1	.618	1
3922		min		.197	2	.022	2	.088	2	.063	2	.187	2
3923		max	B	-.02	2	-.211	2	.292	1	1.718	1	.628	1
3924		min		-.08	1	-.665	1	.096	2	1.501	2	.202	2
3925	P982	max	T	.673	1	.111	1	.281	1	.23	1	.624	1
3926		min		.204	2	.034	2	.085	2	.077	2	.189	2
3927		max	B	-.032	2	-.218	2	.279	1	1.734	1	.628	1
3928		min		-.122	1	-.68	1	.093	2	1.484	2	.204	2
3929	P983	max	T	.603	1	.065	1	.269	1	.22	1	.573	1
3930		min		.186	2	.018	2	.084	2	.079	2	.178	2
3931		max	B	-.018	2	-.205	2	.273	1	1.731	1	.588	1
3932		min		-.075	1	-.621	1	.094	2	1.512	2	.197	2
3933	P984	max	T	.623	1	.103	1	.26	1	.249	1	.578	1
3934		min		.194	2	.03	2	.082	2	.093	2	.181	2
3935		max	B	-.029	2	-.212	2	.26	1	1.748	1	.586	1
3936		min		-.115	1	-.635	1	.091	2	1.495	2	.199	2
3937	P985	max	T	.697	1	.159	1	.269	1	.262	1	.632	1
3938		min		.212	2	.049	2	.081	2	.09	2	.192	2
3939		max	B	-.046	2	-.226	2	.263	1	1.754	1	.63	1
3940		min		-.172	1	-.698	1	.09	2	1.464	2	.206	2
3941	P986	max	T	.724	1	.216	1	.254	1	.301	1	.644	1
3942		min		.22	2	.068	2	.076	2	.104	2	.195	2
3943		max	B	-.064	2	-.235	2	.243	1	1.779	1	.635	1
3944		min		-.233	1	-.719	1	.085	2	1.439	2	.21	2
3945	P987	max	T	.645	1	.149	1	.248	1	.282	1	.585	1
3946		min		.202	2	.045	2	.079	2	.107	2	.184	2
3947		max	B	-.043	2	-.219	2	.243	1	1.768	1	.586	1
3948		min		-.165	1	-.65	1	.088	2	1.475	2	.201	2
3949	P988	max	T	.669	1	.204	1	.233	1	.323	1	.594	1
3950		min		.211	2	.063	2	.074	2	.12	2	.187	2
3951		max	B	-.061	2	-.228	2	.222	1	1.795	1	.589	1
3952		min		-.223	1	-.667	1	.084	2	1.449	2	.205	2
3953	P989	max	T	.754	1	.282	1	.236	1	.35	1	.66	1
3954		min		.23	2	.09	2	.07	2	.12	2	.2	2
3955		max	B	-.085	2	-.245	2	.219	1	1.813	1	.646	1
3956		min		-.303	1	-.741	1	.08	2	1.408	2	.215	2
3957	P990	max	T	.788	1	.356	1	.216	1	.414	1	.683	1
3958		min		.24	2	.117	2	.061	2	.14	2	.208	2
3959		max	B	-.109	2	-.257	2	.191	1	1.858	1	.663	1
3960		min		-.384	1	-.766	1	.074	2	1.367	2	.223	2
3961	P991	max	T	.696	1	.267	1	.214	1	.375	1	.608	1
3962		min		.22	2	.085	2	.068	2	.135	2	.192	2
3963		max	B	-.081	2	-.239	2	.197	1	1.829	1	.596	1
3964		min		-.291	1	-.686	1	.079	2	1.418	2	.21	2

Envelope Plate/Shell Principal Stresses (Continued)

	Plate		Sur...	Sigma1 [ksi]	LC	Sigma2 [ksi]	LC	Tau Max [k...	LC	Angle [rad]	LC	Von Mises [ksi]	LC
3965	P992	max	T	.724	1	.337	1	.194	1	.443	1	.628	1
3966		min		.23	2	.111	2	.06	2	.154	2	.199	2
3967		max	B	-.105	2	-.251	2	.169	1	1.877	1	.612	1
3968		min		-.368	1	-.706	1	.073	2	1.377	2	.218	2
3969	P993	max	T	.825	1	.438	1	.194	1	.501	1	.715	1
3970		min		.25	2	.147	2	.051	2	.167	2	.218	2
3971		max	B	-.135	2	-.271	2	.159	1	1.922	1	.691	1
3972		min		-.474	1	-.792	1	.068	2	1.308	2	.235	2
3973	P994	max	T	.869	1	.524	1	.172	1	.622	1	.758	1
3974		min		.261	2	.183	2	.039	2	.21	2	.232	2
3975		max	B	-.164	2	-.289	2	.123	1	2.025	1	.729	1
3976		min		-.575	1	-.821	1	.063	2	1.224	2	.251	2
3977	P995	max	T	.756	1	.414	1	.171	1	.536	1	.656	1
3978		min		.241	2	.14	2	.05	2	.177	2	.209	2
3979		max	B	-.131	2	-.265	2	.137	1	1.946	1	.636	1
3980		min		-.454	1	-.727	1	.067	2	1.321	2	.23	2
3981	P996	max	T	.793	1	.493	1	.15	1	.667	1	.694	1
3982		min		.251	2	.175	2	.038	2	.21	2	.223	2
3983		max	B	-.158	2	-.283	2	.101	1	2.058	1	.672	1
3984		min		-.547	1	-.749	1	.062	2	1.244	2	.246	2
3985	P997	max	T	.922	1	.611	1	.155	1	.794	1	.813	1
3986		min		.271	2	.224	2	.024	2	.304	2	.251	2
3987		max	B	-.193	2	-.313	2	.085	1	2.222	1	.782	1
3988		min		-.682	1	-.853	1	.06	2	1.105	2	.274	2
3989	P998	max	T	.993	1	.688	1	.153	1	1.026	1	.881	1
3990		min		.285	2	.267	2	.009	2	.811	2	.277	2
3991		max	B	-.219	2	-.347	2	.065	1	.959	2	.85	1
3992		min		-.777	1	-.907	1	.064	2	-.482	1	.304	2
3993	P999	max	T	.838	1	.57	1	.134	1	.852	1	.741	1
3994		min		.262	2	.214	2	.024	2	.267	2	.242	2
3995		max	B	-.186	2	-.307	2	.066	1	2.283	1	.719	1
3996		min		-.643	1	-.776	1	.061	2	1.139	2	.268	2
3997	P1000	max	T	.897	1	.635	1	.131	1	1.093	1	.799	1
3998		min		.273	2	.259	2	.007	2	.514	2	.266	2
3999		max	B	-.212	2	-.34	2	.064	2	1.019	2	.778	1
4000		min		-.721	1	-.825	1	.052	1	-.355	1	.298	2
4001	P1001	max	T	1.092	1	.742	1	.175	1	1.576	2	.966	1
4002		min		.334	2	.283	2	.026	2	1.289	1	.312	2
4003		max	B	-.239	2	-.397	2	.102	1	.824	2	.937	1
4004		min		-.819	1	-1.022	1	.079	2	-.003	1	.346	2
4005	P1002	max	T	1.224	1	.751	1	.236	1	1.704	2	1.069	1
4006		min		.406	2	.281	2	.062	2	1.533	1	.36	2
4007		max	B	-.251	2	-.464	2	.189	1	.735	2	1.048	1
4008		min		-.807	1	-1.185	1	.107	2	.245	1	.403	2
4009	P1003	max	T	.977	1	.678	1	.15	1	1.713	2	.867	1
4010		min		.313	2	.279	2	.017	2	1.354	1	.298	2
4011		max	B	-.233	2	-.385	2	.087	1	.915	2	.85	1
4012		min		-.75	1	-.924	1	.076	2	.092	1	.336	2
4013	P1004	max	T	1.077	1	.692	1	.193	1	1.842	2	.945	1
4014		min		.378	2	.282	2	.048	2	1.592	1	.34	2
4015		max	B	-.248	2	-.442	2	.153	1	.841	2	.934	1
4016		min		-.743	1	-1.048	1	.097	2	.32	1	.384	2
4017	P1005	max	T	.94	1	.655	1	.142	1	1.603	1	.835	1
4018		min		.411	2	.298	2	.057	2	1.017	2	.368	2
4019		max	B	-.286	2	-.471	2	.186	1	-.105	1	.9	1
4020		min		-.655	1	-1.026	1	.092	2	-.479	2	.411	2
4021	P1006	max	T	.862	1	.637	1	.113	1	1.953	1	.774	1

Envelope Plate/Shell Principal Stresses (Continued)

	Plate		Sur...	Sigma1 [ksi]	LC	Sigma2 [ksi]	LC	Tau Max [k...	LC	Angle [rad]	LC	Von Mises [ksi]	LC
4022		min		.346	2	.289	2	.028	2	.793	2	.321	2
4023		max	B	-.279	2	-.394	2	.121	1	.136	1	.812	1
4024		min		-.664	1	-.905	1	.057	2	-.57	2	.351	2
4025	P1007	max	T	.817	1	.609	1	.104	1	1.573	1	.736	1
4026		min		.383	2	.292	2	.045	2	.829	2	.347	2
4027		max	B	-.279	2	-.451	2	.155	1	-.2	1	.806	1
4028		min		-.604	1	-.915	1	.086	2	-.592	2	.394	2
4029	P1008	max	T	.767	1	.585	1	.091	1	1.933	1	.694	1
4030		min		.331	2	.277	2	.027	2	.56	2	.307	2
4031		max	B	-.269	2	-.384	2	.103	1	.017	1	.736	1
4032		min		-.611	1	-.817	1	.057	2	-.668	2	.341	2
4033	P1009	max	T	.814	1	.574	1	.12	1	2.258	1	.724	1
4034		min		.308	2	.26	2	.024	2	.318	2	.287	2
4035		max	B	-.262	2	-.337	2	.092	1	.472	1	.74	1
4036		min		-.631	1	-.815	1	.038	2	-.775	2	.307	2
4037	P1010	max	T	.779	1	.496	1	.142	1	.081	2	.683	1
4038		min		.29	2	.219	2	.036	2	-.68	1	.262	2
4039		max	B	-.233	2	-.302	2	.097	1	2.067	2	.683	1
4040		min		-.565	1	-.759	1	.034	2	.805	1	.274	2
4041	P1011	max	T	.734	1	.529	1	.102	1	2.231	1	.656	1
4042		min		.3	2	.245	2	.028	2	.204	2	.277	2
4043		max	B	-.25	2	-.332	2	.073	1	2.308	2	.675	1
4044		min		-.59	1	-.736	1	.041	2	.344	1	.3	2
4045	P1012	max	T	.708	1	.459	1	.124	1	.035	2	.622	1
4046		min		.283	2	.206	2	.038	2	-.712	1	.253	2
4047		max	B	-.223	2	-.297	2	.074	1	2.068	2	.624	1
4048		min		-.537	1	-.685	1	.037	2	.729	1	.268	2
4049	P1013	max	T	.749	1	.417	1	.166	1	.007	2	.65	1
4050		min		.277	2	.179	2	.049	2	-.548	1	.243	2
4051		max	B	-.197	2	-.281	2	.121	1	1.862	2	.639	1
4052		min		-.483	1	-.724	1	.042	2	1.019	1	.25	2
4053	P1014	max	T	.72	1	.343	1	.189	1	-.02	2	.624	1
4054		min		.264	2	.145	2	.06	2	-.456	1	.229	2
4055		max	B	-.162	2	-.267	2	.148	1	1.759	2	.606	1
4056		min		-.401	1	-.697	1	.052	2	1.146	1	.233	2
4057	P1015	max	T	.685	1	.388	1	.148	1	-.024	2	.595	1
4058		min		.269	2	.17	2	.05	2	-.579	1	.235	2
4059		max	B	-.19	2	-.275	2	.096	1	1.878	2	.584	1
4060		min		-.464	1	-.656	1	.042	2	.984	1	.244	2
4061	P1016	max	T	.661	1	.32	1	.171	1	-.047	2	.573	1
4062		min		.256	2	.137	2	.06	2	-.486	1	.222	2
4063		max	B	-.157	2	-.26	2	.125	1	1.77	2	.555	1
4064		min		-.386	1	-.636	1	.051	2	1.125	1	.226	2
4065	P1017	max	T	.693	1	.274	1	.209	1	-.031	2	.604	1
4066		min		.253	2	.115	2	.069	2	-.389	1	.219	2
4067		max	B	-.13	2	-.255	2	.175	1	1.704	2	.583	1
4068		min		-.324	1	-.673	1	.063	2	1.226	1	.221	2
4069	P1018	max	T	.667	1	.213	1	.227	1	-.035	2	.59	1
4070		min		.242	2	.089	2	.077	2	-.337	1	.212	2
4071		max	B	-.102	2	-.244	2	.198	1	1.67	2	.569	1
4072		min		-.255	1	-.651	1	.071	2	1.282	1	.212	2
4073	P1019	max	T	.639	1	.256	1	.191	1	-.055	2	.557	1
4074		min		.244	2	.108	2	.068	2	-.416	1	.212	2
4075		max	B	-.126	2	-.247	2	.152	1	1.708	2	.535	1
4076		min		-.313	1	-.617	1	.061	2	1.211	1	.214	2
4077	P1020	max	T	.617	1	.198	1	.209	1	-.057	2	.545	1
4078		min		.233	2	.083	2	.075	2	-.362	1	.205	2

Envelope Plate/Shell Principal Stresses (Continued)

	Plate		Sur...	Sigma1 [ksi]	LC	Sigma2 [ksi]	LC	Tau Max [k...	LC	Angle [rad]	LC	Von Mises [ksi]	LC
4079		max	B	-.098	2	-.237	2	.177	1	1.671	2	.522	1
4080		min		-.246	1	-.6	1	.069	2	1.269	1	.206	2
4081	P1021	max	T	.643	1	.16	1	.242	1	-.035	2	.58	1
4082		min		.232	2	.067	2	.083	2	-.295	1	.207	2
4083		max	B	-.077	2	-.235	2	.219	1	1.647	2	.56	1
4084		min		-.194	1	-.631	1	.079	2	1.322	1	.207	2
4085	P1022	max	T	.622	1	.114	1	.254	1	-.033	2	.573	1
4086		min		.223	2	.048	2	.088	2	-.262	1	.204	2
4087		max	B	-.057	2	-.226	2	.235	1	1.63	2	.555	1
4088		min		-.141	1	-.612	1	.085	2	1.351	1	.204	2
4089	P1023	max	T	.596	1	.147	1	.224	1	-.055	2	.538	1
4090		min		.223	2	.061	2	.081	2	-.319	1	.2	2
4091		max	B	-.074	2	-.227	2	.199	1	1.645	2	.516	1
4092		min		-.186	1	-.584	1	.077	2	1.309	1	.201	2
4093	P1024	max	T	.577	1	.104	1	.236	1	-.053	2	.532	1
4094		min		.214	2	.043	2	.085	2	-.285	1	.196	2
4095		max	B	-.054	2	-.219	2	.217	1	1.625	2	.514	1
4096		min		-.135	1	-.568	1	.083	2	1.339	1	.198	2
4097	P1025	max	T	.602	1	.077	1	.263	1	-.029	2	.568	1
4098		min		.215	2	.033	2	.091	2	-.233	1	.201	2
4099		max	B	-.04	2	-.219	2	.249	1	1.617	2	.552	1
4100		min		-.097	1	-.594	1	.09	2	1.374	1	.202	2
4101	P1026	max	T	.585	1	.047	1	.269	1	-.023	2	.563	1
4102		min		.209	2	.021	2	.094	2	-.208	1	.199	2
4103		max	B	-.026	2	-.213	2	.259	1	1.607	2	.55	1
4104		min		-.061	1	-.579	1	.093	2	1.393	1	.201	2
4105	P1027	max	T	.559	1	.068	1	.246	1	-.047	2	.528	1
4106		min		.206	2	.029	2	.088	2	-.255	1	.193	2
4107		max	B	-.037	2	-.212	2	.231	1	1.611	2	.514	1
4108		min		-.092	1	-.553	1	.087	2	1.362	1	.196	2
4109	P1028	max	T	.543	1	.039	1	.252	1	-.04	2	.525	1
4110		min		.199	2	.018	2	.091	2	-.229	1	.191	2
4111		max	B	-.024	2	-.205	2	.241	1	1.6	2	.513	1
4112		min		-.057	1	-.539	1	.091	2	1.38	1	.194	2
4113	P1029	max	T	.571	1	.024	1	.274	1	-.016	2	.559	1
4114		min		.203	2	.012	2	.095	2	-.186	1	.197	2
4115		max	B	-.015	2	-.207	2	.265	1	1.6	2	.548	1
4116		min		-.034	1	-.565	1	.096	2	1.408	1	.2	2
4117	P1030	max	T	.56	1	.008	1	.276	1	-.007	2	.556	1
4118		min		.199	2	.006	2	.096	2	-.164	1	.196	2
4119		max	B	-.008	2	-.203	2	.269	1	1.595	2	.546	1
4120		min		-.014	1	-.552	1	.097	2	1.423	1	.199	2
4121	P1031	max	T	.53	1	.018	1	.256	1	-.031	2	.521	1
4122		min		.193	2	.01	2	.092	2	-.205	1	.188	2
4123		max	B	-.014	2	-.199	2	.248	1	1.593	2	.512	1
4124		min		-.03	1	-.526	1	.093	2	1.395	1	.193	2
4125	P1032	max	T	.519	1	.004	2	.257	1	-.019	2	.517	1
4126		min		.188	2	.004	1	.092	2	-.181	1	.186	2
4127		max	B	-.007	2	-.195	2	.252	1	1.589	2	.509	1
4128		min		-.011	1	-.515	1	.094	2	1.411	1	.191	2
4129	P1033	max	T	.551	1	.002	2	.276	1	.003	2	.552	1
4130		min		.196	2	0	1	.097	2	-.136	1	.195	2
4131		max	B	-.002	1	-.199	2	.27	1	1.591	2	.541	1
4132		min		-.003	2	-.542	1	.098	2	1.443	1	.198	2
4133	P1034	max	T	.543	1	0	2	.272	1	.006	2	.543	1
4134		min		.196	2	0	1	.098	2	-.07	1	.195	2
4135		max	B	0	1	-.197	2	.265	1	1.582	2	.53	1

Envelope Plate/Shell Principal Stresses (Continued)

	Plate		Sur...	Sigma1 [ksi]	LC	Sigma2 [ksi]	LC	Tau Max [k...	LC	Angle [rad]	LC	Von Mises [ksi]	LC
4136		min		0	2	-.53	1	.098	2	1.502	1	.196	2
4137	P1035	max	T	.51	1	.001	2	.256	1	-.005	2	.511	1
4138		min		.186	2	-.003	1	.092	2	-.149	1	.185	2
4139		max	B	0	1	-.191	2	.252	1	1.587	2	.504	1
4140		min		-.002	2	-.504	1	.094	2	1.433	1	.19	2
4141	P1036	max	T	.501	1	0	2	.251	1	.004	2	.501	1
4142		min		.185	2	0	1	.093	2	-.076	1	.185	2
4143		max	B	0	1	-.188	2	.246	1	1.581	2	.492	1
4144		min		0	2	-.492	1	.094	2	1.498	1	.188	2
4145	P1037	max	T	.487	1	0	1	.244	1	.075	1	.487	1
4146		min		.153	2	0	2	.077	2	.009	2	.153	2
4147		max	B	0	2	-.182	2	.269	1	1.632	1	.538	1
4148		min		0	1	-.538	1	.091	2	1.563	2	.182	2
4149	P1038	max	T	.501	1	0	1	.25	1	.15	1	.501	1
4150		min		.156	2	0	2	.078	2	.034	2	.156	2
4151		max	B	0	2	-.183	2	.271	1	1.69	1	.543	1
4152		min		-.003	1	-.545	1	.092	2	1.553	2	.184	2
4153	P1039	max	T	.422	1	0	2	.212	1	.086	1	.423	1
4154		min		.135	2	-.001	1	.067	2	.017	2	.135	2
4155		max	B	0	1	-.169	2	.24	1	1.64	1	.479	1
4156		min		0	2	-.479	1	.085	2	1.567	2	.169	2
4157	P1040	max	T	.437	1	-.001	2	.221	1	.173	1	.44	1
4158		min		.137	2	-.005	1	.069	2	.056	2	.138	2
4159		max	B	.001	2	-.171	2	.244	1	1.706	1	.487	1
4160		min		0	1	-.487	1	.086	2	1.564	2	.171	2
4161	P1041	max	T	.515	1	.01	1	.252	1	.186	1	.51	1
4162		min		.16	2	.002	2	.079	2	.061	2	.159	2
4163		max	B	-.002	2	-.186	2	.268	1	1.713	1	.544	1
4164		min		-.016	1	-.552	1	.092	2	1.546	2	.185	2
4165	P1042	max	T	.53	1	.028	1	.251	1	.214	1	.517	1
4166		min		.166	2	.007	2	.08	2	.083	2	.163	2
4167		max	B	-.007	2	-.191	2	.262	1	1.73	1	.543	1
4168		min		-.037	1	-.56	1	.092	2	1.536	2	.187	2
4169	P1043	max	T	.453	1	.001	1	.226	1	.212	1	.452	1
4170		min		.143	2	0	2	.072	2	.089	2	.143	2
4171		max	B	0	2	-.174	2	.243	1	1.731	1	.49	1
4172		min		-.008	1	-.495	1	.087	2	1.56	2	.174	2
4173	P1044	max	T	.469	1	.016	1	.226	1	.242	1	.461	1
4174		min		.149	2	.002	2	.074	2	.112	2	.148	2
4175		max	B	-.003	2	-.178	2	.238	1	1.748	1	.49	1
4176		min		-.026	1	-.503	1	.087	2	1.55	2	.177	2
4177	P1045	max	T	.548	1	.055	1	.246	1	.241	1	.522	1
4178		min		.173	2	.014	2	.08	2	.1	2	.167	2
4179		max	B	-.015	2	-.196	2	.252	1	1.745	1	.54	1
4180		min		-.066	1	-.571	1	.091	2	1.523	2	.189	2
4181	P1046	max	T	.566	1	.09	1	.238	1	.271	1	.527	1
4182		min		.181	2	.025	2	.078	2	.115	2	.17	2
4183		max	B	-.025	2	-.203	2	.239	1	1.762	1	.538	1
4184		min		-.105	1	-.582	1	.089	2	1.505	2	.191	2
4185	P1047	max	T	.486	1	.04	1	.223	1	.269	1	.467	1
4186		min		.157	2	.008	2	.074	2	.129	2	.153	2
4187		max	B	-.01	2	-.184	2	.229	1	1.763	1	.488	1
4188		min		-.054	1	-.513	1	.087	2	1.536	2	.179	2
4189	P1048	max	T	.504	1	.073	1	.215	1	.298	1	.472	1
4190		min		.165	2	.018	2	.074	2	.142	2	.157	2
4191		max	B	-.02	2	-.19	2	.216	1	1.78	1	.484	1
4192		min		-.091	1	-.523	1	.085	2	1.517	2	.181	2

Envelope Plate/Shell Principal Stresses (Continued)

	Plate		Sur...	Sigma1 [ksi]	LC	Sigma2 [ksi]	LC	Tau Max [k...	LC	Angle [rad]	LC	Von Mises [ksi]	LC
4193	P1049	max	T	.587	1	.135	1	.226	1	.305	1	.532	1
4194		min		.189	2	.039	2	.075	2	.127	2	.173	2
4195		max	B	-.039	2	-.21	2	.221	1	1.783	1	.536	1
4196		min		-.153	1	-.595	1	.085	2	1.484	2	.193	2
4197	P1050	max	T	.608	1	.187	1	.211	1	.348	1	.54	1
4198		min		.198	2	.057	2	.071	2	.141	2	.177	2
4199		max	B	-.057	2	-.219	2	.2	1	1.81	1	.536	1
4200		min		-.21	1	-.609	1	.081	2	1.458	2	.197	2
4201	P1051	max	T	.523	1	.116	1	.204	1	.333	1	.476	1
4202		min		.174	2	.032	2	.071	2	.154	2	.16	2
4203		max	B	-.034	2	-.198	2	.199	1	1.8	1	.481	1
4204		min		-.137	1	-.534	1	.082	2	1.494	2	.183	2
4205	P1052	max	T	.542	1	.166	1	.188	1	.377	1	.481	1
4206		min		.183	2	.049	2	.067	2	.166	2	.164	2
4207		max	B	-.051	2	-.206	2	.177	1	1.827	1	.48	1
4208		min		-.192	1	-.546	1	.077	2	1.467	2	.186	2
4209	P1053	max	T	.631	1	.248	1	.192	1	.403	1	.551	1
4210		min		.208	2	.078	2	.065	2	.155	2	.182	2
4211		max	B	-.077	2	-.229	2	.175	1	1.846	1	.542	1
4212		min		-.275	1	-.625	1	.076	2	1.427	2	.202	2
4213	P1054	max	T	.656	1	.314	1	.171	1	.476	1	.569	1
4214		min		.218	2	.103	2	.057	2	.174	2	.189	2
4215		max	B	-.1	2	-.241	2	.146	1	1.897	1	.556	1
4216		min		-.349	1	-.641	1	.07	2	1.387	2	.209	2
4217	P1055	max	T	.563	1	.224	1	.17	1	.436	1	.491	1
4218		min		.193	2	.07	2	.061	2	.181	2	.169	2
4219		max	B	-.071	2	-.216	2	.151	1	1.865	1	.484	1
4220		min		-.256	1	-.558	1	.072	2	1.434	2	.19	2
4221	P1056	max	T	.586	1	.287	1	.149	1	.516	1	.507	1
4222		min		.203	2	.094	2	.054	2	.201	2	.176	2
4223		max	B	-.094	2	-.227	2	.123	1	1.921	1	.496	1
4224		min		-.326	1	-.571	1	.067	2	1.394	2	.198	2
4225	P1057	max	T	.684	1	.385	1	.15	1	.577	1	.594	1
4226		min		.229	2	.132	2	.048	2	.197	2	.199	2
4227		max	B	-.125	2	-.255	2	.114	1	1.973	1	.578	1
4228		min		-.429	1	-.658	1	.065	2	1.333	2	.221	2
4229	P1058	max	T	.716	1	.457	1	.13	1	.719	1	.628	1
4230		min		.239	2	.165	2	.037	2	.227	2	.212	2
4231		max	B	-.152	2	-.273	2	.081	1	2.102	1	.611	1
4232		min		-.514	1	-.676	1	.061	2	1.262	2	.237	2
4233	P1059	max	T	.611	1	.352	1	.129	1	.628	1	.531	1
4234		min		.213	2	.122	2	.046	2	.226	2	.185	2
4235		max	B	-.118	2	-.241	2	.092	1	2.01	1	.518	1
4236		min		-.401	1	-.586	1	.061	2	1.342	2	.209	2
4237	P1060	max	T	.641	1	.416	1	.113	1	.784	1	.563	1
4238		min		.224	2	.153	2	.036	2	.261	2	.199	2
4239		max	B	-.144	2	-.258	2	.063	1	2.172	1	.551	1
4240		min		-.477	1	-.602	1	.057	2	1.276	2	.224	2
4241	P1061	max	T	.756	1	.523	1	.116	1	.915	1	.671	1
4242		min		.25	2	.202	2	.024	2	.271	2	.23	2
4243		max	B	-.179	2	-.296	2	.059	2	1.171	2	.655	1
4244		min		-.598	1	-.7	1	.051	1	-.766	1	.258	2
4245	P1062	max	T	.808	1	.577	1	.116	1	1.159	1	.721	1
4246		min		.261	2	.243	2	.009	2	.371	2	.252	2
4247		max	B	-.204	2	-.326	2	.061	2	1.071	2	.708	1
4248		min		-.656	1	-.75	1	.047	1	-.227	1	.285	2
4249	P1063	max	T	.679	1	.472	1	.104	1	.989	1	.603	1

Envelope Plate/Shell Principal Stresses (Continued)

	Plate		Sur...	Sigma1 [ksi]	LC	Sigma2 [ksi]	LC	Tau Max [k...	LC	Angle [rad]	LC	Von Mises [ksi]	LC
4250		min		.235	2	.188	2	.024	2	.311	2	.216	2
4251		max	B	-.17	2	-.279	2	.054	2	1.195	2	.592	1
4252		min		-.546	1	-.629	1	.041	1	-.617	1	.244	2
4253	P1064	max	T	.727	1	.514	1	.106	1	1.223	1	.648	1
4254		min		.247	2	.225	2	.011	2	.413	2	.237	2
4255		max	B	-.195	2	-.306	2	.056	2	1.109	2	.64	1
4256		min		-.586	1	-.683	1	.048	1	-.12	1	.269	2
4257	P1065	max	T	.875	1	.61	1	.132	1	1.821	2	.777	1
4258		min		.291	2	.27	2	.011	2	1.41	1	.281	2
4259		max	B	-.226	2	-.365	2	.08	1	.983	2	.768	1
4260		min		-.675	1	-.836	1	.07	2	.154	1	.319	2
4261	P1066	max	T	.953	1	.627	1	.163	1	1.953	2	.839	1
4262		min		.346	2	.278	2	.034	2	1.639	1	.317	2
4263		max	B	-.244	2	-.419	2	.13	1	.935	2	.839	1
4264		min		-.678	1	-.938	1	.087	2	.378	1	.364	2
4265	P1067	max	T	.785	1	.542	1	.121	1	1.747	2	.696	1
4266		min		.268	2	.257	2	.005	2	1.448	1	.262	2
4267		max	B	-.218	2	-.341	2	.077	1	1.037	2	.692	1
4268		min		-.603	1	-.756	1	.061	2	.177	1	.299	2
4269	P1068	max	T	.842	1	.554	1	.144	1	1.964	2	.741	1
4270		min		.312	2	.267	2	.023	2	1.643	1	.292	2
4271		max	B	-.238	2	-.381	2	.11	1	1.003	2	.743	1
4272		min		-.608	1	-.828	1	.072	2	.362	1	.333	2
4273	P1069	max	T	1.015	1	.616	1	.199	1	2.039	2	.886	1
4274		min		.403	2	.281	2	.061	2	1.829	1	.358	2
4275		max	B	-.256	2	-.475	2	.177	1	.945	2	.893	1
4276		min		-.661	1	-1.015	1	.11	2	.551	1	.411	2
4277	P1070	max	T	1.115	1	.588	1	.264	1	2.145	2	.966	1
4278		min		.486	2	.282	2	.102	2	2.007	1	.422	2
4279		max	B	-.271	2	-.559	2	.247	1	.976	2	.982	1
4280		min		-.636	1	-1.131	1	.144	2	.697	1	.484	2
4281	P1071	max	T	.898	1	.555	1	.171	1	2.079	2	.785	1
4282		min		.362	2	.275	2	.043	2	1.825	1	.327	2
4283		max	B	-.256	2	-.43	2	.145	1	1.009	2	.792	1
4284		min		-.607	1	-.896	1	.087	2	.528	1	.374	2
4285	P1072	max	T	.926	1	.539	1	.194	1	2.192	2	.806	1
4286		min		.408	2	.279	2	.064	2	1.994	1	.361	2
4287		max	B	-.269	2	-.477	2	.171	1	1.066	2	.819	1
4288		min		-.592	1	-.935	1	.104	2	.699	1	.414	2
4289	P1073	max	T	.821	1	.546	1	.137	1	.988	1	.724	1
4290		min		.484	2	.304	2	.09	2	.679	2	.424	2
4291		max	B	-.295	2	-.578	2	.23	1	-.583	1	.85	1
4292		min		-.522	1	-.981	1	.141	2	-.748	2	.5	2
4293	P1074	max	T	.752	1	.562	1	.095	1	1.248	1	.678	1
4294		min		.405	2	.292	2	.056	2	.697	2	.362	2
4295		max	B	-.279	2	-.487	2	.175	1	-.439	1	.775	1
4296		min		-.537	1	-.888	1	.104	2	-.697	2	.423	2
4297	P1075	max	T	.682	1	.522	1	.08	1	1.037	1	.618	1
4298		min		.405	2	.296	2	.054	2	.573	2	.363	2
4299		max	B	-.281	2	-.495	2	.172	1	2.346	2	.725	1
4300		min		-.488	1	-.833	1	.107	2	-.602	1	.43	2
4301	P1076	max	T	.666	1	.524	1	.071	1	1.333	1	.608	1
4302		min		.363	2	.288	2	.037	2	.578	2	.332	2
4303		max	B	-.271	2	-.445	2	.148	1	-.461	1	.697	1
4304		min		-.5	1	-.796	1	.087	2	-.748	2	.389	2
4305	P1077	max	T	.721	1	.564	1	.079	1	1.569	1	.657	1
4306		min		.356	2	.284	2	.036	2	.633	2	.326	2

Envelope Plate/Shell Principal Stresses (Continued)

	Plate		Sur...	Sigma1 [ksi]	LC	Sigma2 [ksi]	LC	Tau Max [k...	LC	Angle [rad]	LC	Von Mises [ksi]	LC
4307		max	B	-.27	2	-.426	2	.134	1	-.284	1	.727	1
4308		min		-.555	1	-.823	1	.078	2	-.686	2	.373	2
4309	P1078	max	T	.686	1	.53	1	.078	1	1.929	1	.623	1
4310		min		.312	2	.263	2	.024	2	.364	2	.29	2
4311		max	B	-.256	2	-.366	2	.092	1	-.083	1	.667	1
4312		min		-.556	1	-.74	1	.055	2	-.736	2	.325	2
4313	P1079	max	T	.64	1	.505	1	.067	1	1.657	1	.585	1
4314		min		.319	2	.272	2	.024	2	.438	2	.298	2
4315		max	B	-.257	2	-.39	2	.116	1	-.313	1	.65	1
4316		min		-.503	1	-.734	1	.067	2	-.735	2	.344	2
4317	P1080	max	T	.619	1	.473	1	.073	1	1.942	1	.56	1
4318		min		.29	2	.247	2	.021	2	.159	2	.271	2
4319		max	B	-.242	2	-.343	2	.084	1	-.15	1	.604	1
4320		min		-.501	1	-.67	1	.051	2	-.78	2	.306	2
4321	P1081	max	T	.661	1	.48	1	.091	1	2.206	1	.592	1
4322		min		.287	2	.229	2	.029	2	.09	2	.263	2
4323		max	B	-.237	2	-.32	2	.061	1	2.266	2	.614	1
4324		min		-.543	1	-.666	1	.042	2	.211	1	.288	2
4325	P1082	max	T	.641	1	.419	1	.111	1	-.025	2	.563	1
4326		min		.271	2	.193	2	.039	2	-.746	1	.241	2
4327		max	B	-.212	2	-.287	2	.055	1	2.066	2	.568	1
4328		min		-.504	1	-.615	1	.038	2	.633	1	.258	2
4329	P1083	max	T	.598	1	.428	1	.085	1	2.175	1	.533	1
4330		min		.27	2	.214	2	.028	2	-.032	2	.247	2
4331		max	B	-.223	2	-.303	2	.056	1	2.245	2	.556	1
4332		min		-.492	1	-.604	1	.04	2	.091	1	.272	2
4333	P1084	max	T	.578	1	.376	1	.101	1	2.352	1	.508	1
4334		min		.254	2	.18	2	.037	2	-.099	2	.226	2
4335		max	B	-.199	2	-.272	2	.043	1	2.071	2	.513	1
4336		min		-.465	1	-.551	1	.037	2	.498	1	.244	2
4337	P1085	max	T	.621	1	.355	1	.133	1	-.066	2	.539	1
4338		min		.257	2	.159	2	.049	2	-.614	1	.224	2
4339		max	B	-.181	2	-.265	2	.074	1	1.892	2	.53	1
4340		min		-.44	1	-.588	1	.042	2	.943	1	.234	2
4341	P1086	max	T	.601	1	.293	1	.154	1	-.08	2	.52	1
4342		min		.244	2	.128	2	.058	2	-.518	1	.211	2
4343		max	B	-.15	2	-.249	2	.102	1	1.781	2	.502	1
4344		min		-.368	1	-.572	1	.049	2	1.105	1	.217	2
4345	P1087	max	T	.558	1	.32	1	.119	1	-.119	2	.485	1
4346		min		.241	2	.147	2	.047	2	-.657	1	.21	2
4347		max	B	-.171	2	-.25	2	.056	1	1.908	2	.477	1
4348		min		-.411	1	-.523	1	.04	2	.884	1	.222	2
4349	P1088	max	T	.54	1	.263	1	.138	1	-.121	2	.467	1
4350		min		.228	2	.118	2	.055	2	-.558	1	.197	2
4351		max	B	-.142	2	-.235	2	.081	1	1.795	2	.449	1
4352		min		-.345	1	-.507	1	.047	2	1.081	1	.205	2
4353	P1089	max	T	.581	1	.234	1	.174	1	-.084	2	.506	1
4354		min		.232	2	.1	2	.066	2	-.446	1	.201	2
4355		max	B	-.12	2	-.236	2	.13	1	1.715	2	.483	1
4356		min		-.298	1	-.558	1	.058	2	1.198	1	.205	2
4357	P1090	max	T	.562	1	.179	1	.191	1	-.083	2	.497	1
4358		min		.221	2	.076	2	.073	2	-.39	1	.194	2
4359		max	B	-.093	2	-.226	2	.156	1	1.672	2	.473	1
4360		min		-.233	1	-.544	1	.066	2	1.257	1	.197	2
4361	P1091	max	T	.521	1	.208	1	.157	1	-.118	2	.455	1
4362		min		.216	2	.091	2	.063	2	-.481	1	.188	2
4363		max	B	-.113	2	-.222	2	.108	1	1.723	2	.431	1

Envelope Plate/Shell Principal Stresses (Continued)

	Plate		Sur...	Sigma1 [ksi]	LC	Sigma2 [ksi]	LC	Tau Max [k...	LC	Angle [rad]	LC	Von Mises [ksi]	LC
4364		min		-.279	1	-.496	1	.055	2	1.184	1	.192	2
4365	P1092	max	T	.504	1	.157	1	.174	1	-.114	2	.447	1
4366		min		.205	2	.068	2	.069	2	-.423	1	.181	2
4367		max	B	-.087	2	-.212	2	.134	1	1.676	2	.421	1
4368		min		-.217	1	-.485	1	.063	2	1.246	1	.184	2
4369	P1093	max	T	.544	1	.131	1	.206	1	-.08	2	.491	1
4370		min		.211	2	.055	2	.078	2	-.346	1	.189	2
4371		max	B	-.07	2	-.217	2	.178	1	1.643	2	.469	1
4372		min		-.175	1	-.531	1	.073	2	1.298	1	.192	2
4373	P1094	max	T	.526	1	.089	1	.218	1	-.076	2	.488	1
4374		min		.201	2	.038	2	.082	2	-.311	1	.185	2
4375		max	B	-.05	2	-.208	2	.197	1	1.622	2	.469	1
4376		min		-.125	1	-.519	1	.079	2	1.327	1	.189	2
4377	P1095	max	T	.487	1	.11	1	.188	1	-.109	2	.443	1
4378		min		.195	2	.047	2	.074	2	-.377	1	.176	2
4379		max	B	-.064	2	-.203	2	.157	1	1.643	2	.419	1
4380		min		-.16	1	-.475	1	.07	2	1.286	1	.18	2
4381	P1096	max	T	.471	1	.071	1	.2	1	-.104	2	.44	1
4382		min		.186	2	.03	2	.078	2	-.341	1	.172	2
4383		max	B	-.044	2	-.195	2	.177	1	1.618	2	.42	1
4384		min		-.111	1	-.465	1	.075	2	1.313	1	.177	2
4385	P1097	max	T	.51	1	.055	1	.228	1	-.07	2	.485	1
4386		min		.193	2	.024	2	.085	2	-.281	1	.182	2
4387		max	B	-.033	2	-.201	2	.212	1	1.605	2	.47	1
4388		min		-.082	1	-.506	1	.084	2	1.348	1	.187	2
4389	P1098	max	T	.495	1	.028	1	.233	1	-.062	2	.482	1
4390		min		.186	2	.013	2	.086	2	-.255	1	.179	2
4391		max	B	-.02	2	-.194	2	.222	1	1.593	2	.471	1
4392		min		-.049	1	-.494	1	.087	2	1.365	1	.185	2
4393	P1099	max	T	.456	1	.038	1	.209	1	-.098	2	.439	1
4394		min		.177	2	.017	2	.08	2	-.312	1	.169	2
4395		max	B	-.028	2	-.188	2	.192	1	1.598	2	.423	1
4396		min		-.069	1	-.454	1	.08	2	1.332	1	.175	2
4397	P1100	max	T	.442	1	.013	1	.214	1	-.09	2	.435	1
4398		min		.169	2	.008	2	.081	2	-.286	1	.166	2
4399		max	B	-.016	2	-.181	2	.203	1	1.583	2	.426	1
4400		min		-.037	1	-.443	1	.083	2	1.347	1	.174	2
4401	P1101	max	T	.482	1	.009	1	.236	1	-.051	2	.477	1
4402		min		.179	2	.006	2	.087	2	-.23	1	.176	2
4403		max	B	-.011	2	-.189	2	.229	1	1.585	2	.471	1
4404		min		-.023	1	-.482	1	.089	2	1.38	1	.184	2
4405	P1102	max	T	.47	1	.002	2	.236	1	-.036	2	.472	1
4406		min		.175	2	-.002	1	.086	2	-.204	1	.174	2
4407		max	B	-.005	2	-.184	2	.232	1	1.581	2	.467	1
4408		min		-.006	1	-.471	1	.089	2	1.395	1	.181	2
4409	P1103	max	T	.428	1	.002	2	.216	1	-.078	2	.43	1
4410		min		.163	2	-.003	1	.081	2	-.262	1	.162	2
4411		max	B	-.007	2	-.175	2	.209	1	1.573	2	.425	1
4412		min		-.014	1	-.432	1	.084	2	1.359	1	.171	2
4413	P1104	max	T	.416	1	-.001	2	.214	1	-.061	2	.422	1
4414		min		.157	2	-.012	1	.079	2	-.235	1	.158	2
4415		max	B	.001	1	-.169	2	.211	1	1.569	2	.421	1
4416		min		-.002	2	-.42	1	.084	2	1.374	1	.168	2
4417	P1105	max	T	.461	1	0	2	.234	1	-.014	2	.464	1
4418		min		.171	2	-.007	1	.086	2	-.168	1	.171	2
4419		max	B	.002	1	-.18	2	.231	1	1.584	2	.461	1
4420		min		-.001	2	-.46	1	.089	2	1.419	1	.179	2

Envelope Plate/Shell Principal Stresses (Continued)

	Plate		Sur...	Sigma1 [ksi]	LC	Sigma2 [ksi]	LC	Tau Max [k...	LC	Angle [rad]	LC	Von Mises [ksi]	LC
4421	P1106	max	T	.451	1	0	2	.226	1	-.004	2	.451	1
4422		min		.171	2	-.002	1	.085	2	-.086	1	.171	2
4423		max	B	0	1	-.177	2	.224	1	1.575	2	.447	1
4424		min		0	2	-.446	1	.088	2	1.49	1	.177	2
4425	P1107	max	T	.405	1	-.001	2	.208	1	-.036	2	.411	1
4426		min		.153	2	-.012	1	.077	2	-.196	1	.154	2
4427		max	B	.007	1	-.165	2	.208	1	1.57	2	.412	1
4428		min		0	2	-.409	1	.082	2	1.399	1	.165	2
4429	P1108	max	T	.393	1	0	2	.198	1	-.006	2	.394	1
4430		min		.152	2	-.003	1	.076	2	-.1	1	.153	2
4431		max	B	.002	1	-.162	2	.198	1	1.576	2	.395	1
4432		min		0	2	-.394	1	.081	2	1.479	1	.162	2
4433	P1109	max	T	.349	1	0	2	.176	1	.107	1	.35	1
4434		min		.112	2	-.003	1	.057	2	.035	2	.113	2
4435		max	B	.002	1	-.153	2	.207	1	1.653	1	.413	1
4436		min		0	2	-.412	1	.077	2	1.576	2	.154	2
4437	P1110	max	T	.367	1	-.004	2	.19	1	.21	1	.373	1
4438		min		.116	2	-.013	1	.06	2	.093	2	.118	2
4439		max	B	.007	1	-.154	2	.215	1	1.731	1	.425	1
4440		min		.003	2	-.422	1	.079	2	1.583	2	.156	2
4441	P1111	max	T	.268	1	-.002	2	.138	1	.147	1	.272	1
4442		min		.087	2	-.007	1	.044	2	.07	2	.088	2
4443		max	B	.005	1	-.134	2	.171	1	1.677	1	.34	1
4444		min		.002	2	-.338	1	.068	2	1.593	2	.134	2
4445	P1112	max	T	.292	1	-.007	2	.158	1	.274	1	.305	1
4446		min		.092	2	-.025	1	.05	2	.157	2	.096	2
4447		max	B	.017	1	-.135	2	.184	1	1.772	1	.359	1
4448		min		.006	2	-.35	1	.07	2	1.613	2	.138	2
4449	P1113	max	T	.384	1	-.006	2	.198	1	.253	1	.391	1
4450		min		.122	2	-.012	1	.064	2	.13	2	.125	2
4451		max	B	.004	2	-.158	2	.217	1	1.758	1	.432	1
4452		min		.003	1	-.431	1	.081	2	1.58	2	.16	2
4453	P1114	max	T	.402	1	-.001	1	.202	1	.281	1	.403	1
4454		min		.13	2	-.004	2	.067	2	.153	2	.132	2
4455		max	B	.001	2	-.163	2	.214	1	1.774	1	.434	1
4456		min		-.012	1	-.44	1	.082	2	1.569	2	.163	2
4457	P1115	max	T	.312	1	-.012	2	.172	1	.314	1	.329	1
4458		min		.1	2	-.031	1	.056	2	.195	2	.106	2
4459		max	B	.018	1	-.139	2	.19	1	1.8	1	.371	1
4460		min		.008	2	-.361	1	.074	2	1.61	2	.144	2
4461	P1116	max	T	.332	1	-.013	2	.179	1	.336	1	.345	1
4462		min		.108	2	-.025	1	.061	2	.211	2	.115	2
4463		max	B	.008	1	-.145	2	.19	1	1.812	1	.376	1
4464		min		.008	2	-.372	1	.076	2	1.595	2	.148	2
4465	P1117	max	T	.42	1	.02	1	.2	1	.306	1	.41	1
4466		min		.138	2	0	2	.069	2	.167	2	.138	2
4467		max	B	-.005	2	-.168	2	.206	1	1.787	1	.432	1
4468		min		-.037	1	-.449	1	.082	2	1.552	2	.166	2
4469	P1118	max	T	.437	1	.051	1	.193	1	.333	1	.414	1
4470		min		.147	2	.01	2	.069	2	.177	2	.142	2
4471		max	B	-.014	2	-.175	2	.193	1	1.801	1	.427	1
4472		min		-.072	1	-.459	1	.08	2	1.53	2	.168	2
4473	P1119	max	T	.35	1	-.007	1	.179	1	.356	1	.353	1
4474		min		.117	2	-.009	2	.063	2	.219	2	.122	2
4475		max	B	.003	2	-.15	2	.184	1	1.82	1	.374	1
4476		min		-.014	1	-.381	1	.077	2	1.573	2	.152	2
4477	P1120	max	T	.367	1	.022	1	.173	1	.379	1	.357	1

Envelope Plate/Shell Principal Stresses (Continued)

	Plate		Sur...	Sigma1 [ksi]	LC	Sigma2 [ksi]	LC	Tau Max [k...	LC	Angle [rad]	LC	Von Mises [ksi]	LC
4478		min		.126	2	0	2	.064	2	.223	2	.127	2
4479		max	B	-.006	2	-.157	2	.171	1	1.829	1	.368	1
4480		min		-.047	1	-.39	1	.075	2	1.546	2	.154	2
4481	P1121	max	T	.455	1	.092	1	.182	1	.367	1	.417	1
4482		min		.156	2	.023	2	.067	2	.187	2	.146	2
4483		max	B	-.028	2	-.182	2	.176	1	1.819	1	.422	1
4484		min		-.117	1	-.468	1	.077	2	1.504	2	.17	2
4485	P1122	max	T	.473	1	.141	1	.166	1	.413	1	.421	1
4486		min		.165	2	.04	2	.063	2	.198	2	.149	2
4487		max	B	-.044	2	-.19	2	.154	1	1.846	1	.419	1
4488		min		-.171	1	-.478	1	.073	2	1.474	2	.172	2
4489	P1123	max	T	.384	1	.062	1	.161	1	.411	1	.357	1
4490		min		.136	2	.012	2	.062	2	.228	2	.13	2
4491		max	B	-.019	2	-.164	2	.153	1	1.845	1	.361	1
4492		min		-.091	1	-.398	1	.072	2	1.515	2	.155	2
4493	P1124	max	T	.401	1	.11	1	.146	1	.459	1	.359	1
4494		min		.145	2	.029	2	.058	2	.238	2	.133	2
4495		max	B	-.036	2	-.171	2	.131	1	1.872	1	.356	1
4496		min		-.145	1	-.406	1	.068	2	1.481	2	.156	2
4497	P1125	max	T	.492	1	.196	1	.148	1	.477	1	.429	1
4498		min		.175	2	.06	2	.057	2	.214	2	.154	2
4499		max	B	-.064	2	-.199	2	.128	1	1.887	1	.423	1
4500		min		-.232	1	-.488	1	.068	2	1.44	2	.176	2
4501	P1126	max	T	.513	1	.255	1	.129	1	.566	1	.445	1
4502		min		.185	2	.084	2	.05	2	.236	2	.161	2
4503		max	B	-.087	2	-.21	2	.1	1	1.953	1	.435	1
4504		min		-.299	1	-.499	1	.062	2	1.398	2	.183	2
4505	P1127	max	T	.42	1	.163	1	.128	1	.53	1	.367	1
4506		min		.155	2	.049	2	.053	2	.254	2	.137	2
4507		max	B	-.056	2	-.18	2	.105	1	1.918	1	.359	1
4508		min		-.205	1	-.415	1	.062	2	1.442	2	.16	2
4509	P1128	max	T	.442	1	.219	1	.111	1	.633	1	.383	1
4510		min		.165	2	.073	2	.046	2	.281	2	.143	2
4511		max	B	-.079	2	-.19	2	.078	1	2.003	1	.373	1
4512		min		-.269	1	-.425	1	.056	2	1.398	2	.166	2
4513	P1129	max	T	.538	1	.315	1	.112	1	.693	1	.468	1
4514		min		.196	2	.111	2	.042	2	.267	2	.17	2
4515		max	B	-.111	2	-.223	2	.072	1	2.067	1	.458	1
4516		min		-.369	1	-.512	1	.056	2	1.347	2	.193	2
4517	P1130	max	T	.569	1	.37	1	.1	1	.865	1	.5	1
4518		min		.207	2	.141	2	.033	2	.314	2	.183	2
4519		max	B	-.136	2	-.239	2	.051	2	2.296	1	.49	1
4520		min		-.436	1	-.531	1	.048	1	1.284	2	.208	2
4521	P1131	max	T	.469	1	.273	1	.098	1	.779	1	.408	1
4522		min		.176	2	.099	2	.038	2	.323	2	.153	2
4523		max	B	-.103	2	-.203	2	.054	1	2.17	1	.398	1
4524		min		-.333	1	-.44	1	.05	2	1.344	2	.175	2
4525	P1132	max	T	.503	1	.32	1	.092	1	.963	1	.441	1
4526		min		.187	2	.127	2	.03	2	.39	2	.166	2
4527		max	B	-.128	2	-.217	2	.044	2	1.28	2	.432	1
4528		min		-.387	1	-.466	1	.039	1	-.637	1	.189	2
4529	P1133	max	T	.608	1	.416	1	.096	1	1.072	1	.539	1
4530		min		.218	2	.173	2	.023	2	.388	2	.199	2
4531		max	B	-.162	2	-.258	2	.048	2	1.209	2	.531	1
4532		min		-.487	1	-.566	1	.04	1	-.421	1	.226	2
4533	P1134	max	T	.656	1	.45	1	.103	1	1.283	1	.581	1
4534		min		.231	2	.206	2	.012	2	.546	2	.219	2

Envelope Plate/Shell Principal Stresses (Continued)

	Plate		Sur...	Sigma1 [ksi]	LC	Sigma2 [ksi]	LC	Tau Max [k...	LC	Angle [rad]	LC	Von Mises [ksi]	LC
4535		max	B	-.187	2	-.282	2	.054	1	1.131	2	.576	1
4536		min		-.514	1	-.623	1	.048	2	-.051	1	.249	2
4537	P1135	max	T	.546	1	.356	1	.095	1	1.158	1	.48	1
4538		min		.2	2	.157	2	.021	2	.504	2	.182	2
4539		max	B	-.153	2	-.234	2	.046	1	1.205	2	.473	1
4540		min		-.421	1	-.512	1	.041	2	-.249	1	.206	2
4541	P1136	max	T	.593	1	.383	1	.105	1	1.335	1	.521	1
4542		min		.214	2	.186	2	.014	2	.728	2	.201	2
4543		max	B	-.178	2	-.255	2	.065	1	1.128	2	.517	1
4544		min		-.44	1	-.569	1	.039	2	-.016	1	.226	2
4545	P1137	max	T	.707	1	.471	1	.118	1	1.468	1	.623	1
4546		min		.248	2	.237	2	.006	2	1.278	2	.242	2
4547		max	B	-.209	2	-.311	2	.078	1	1.069	2	.621	1
4548		min		-.529	1	-.684	1	.051	2	.157	1	.274	2
4549	P1138	max	T	.755	1	.485	1	.135	1	1.838	2	.662	1
4550		min		.282	2	.252	2	.015	2	1.636	1	.268	2
4551		max	B	-.231	2	-.344	2	.101	1	1.039	2	.664	1
4552		min		-.539	1	-.742	1	.056	2	.316	1	.303	2
4553	P1139	max	T	.64	1	.402	1	.119	1	1.486	1	.561	1
4554		min		.233	2	.211	2	.011	2	1.165	2	.223	2
4555		max	B	-.201	2	-.279	2	.084	1	1.066	2	.559	1
4556		min		-.455	1	-.624	1	.039	2	.13	1	.249	2
4557	P1140	max	T	.682	1	.415	1	.133	1	1.616	1	.595	1
4558		min		.259	2	.229	2	.015	2	1.567	2	.245	2
4559		max	B	-.223	2	-.305	2	.1	1	1.037	2	.595	1
4560		min		-.469	1	-.67	1	.041	2	.247	1	.273	2
4561	P1141	max	T	.792	1	.49	1	.151	1	2.009	2	.693	1
4562		min		.319	2	.263	2	.028	2	1.785	1	.295	2
4563		max	B	-.251	2	-.379	2	.12	1	1.052	2	.697	1
4564		min		-.546	1	-.785	1	.064	2	.459	1	.333	2
4565	P1142	max	T	.82	1	.491	1	.165	1	2.16	2	.715	1
4566		min		.36	2	.274	2	.043	2	1.939	1	.325	2
4567		max	B	-.27	2	-.417	2	.134	1	1.101	2	.723	1
4568		min		-.551	1	-.819	1	.074	2	.613	1	.367	2
4569	P1143	max	T	.713	1	.425	1	.144	1	1.801	2	.621	1
4570		min		.288	2	.244	2	.022	2	1.737	1	.268	2
4571		max	B	-.244	2	-.332	2	.11	1	1.049	2	.623	1
4572		min		-.483	1	-.703	1	.044	2	.359	1	.298	2
4573	P1144	max	T	.729	1	.433	1	.148	1	1.968	2	.635	1
4574		min		.314	2	.258	2	.028	2	1.853	1	.29	2
4575		max	B	-.264	2	-.358	2	.111	1	1.11	2	.638	1
4576		min		-.497	1	-.72	1	.047	2	.479	1	.321	2
4577	P1145	max	T	.815	1	.486	1	.164	1	2.333	2	.71	1
4578		min		.389	2	.283	2	.053	2	2.102	1	.348	2
4579		max	B	-.282	2	-.453	2	.137	1	1.208	2	.727	1
4580		min		-.55	1	-.824	1	.085	2	.804	1	.396	2
4581	P1146	max	T	.799	1	.486	1	.157	1	2.248	1	.698	1
4582		min		.419	2	.296	2	.062	2	-.674	2	.373	2
4583		max	B	-.3	2	-.482	2	.13	1	1.337	2	.719	1
4584		min		-.553	1	-.813	1	.091	2	.999	1	.422	2
4585	P1147	max	T	.73	1	.439	1	.145	1	2.12	2	.636	1
4586		min		.338	2	.271	2	.033	2	1.968	1	.31	2
4587		max	B	-.282	2	-.381	2	.104	1	1.211	2	.642	1
4588		min		-.513	1	-.72	1	.05	2	.613	1	.343	2
4589	P1148	max	T	.712	1	.446	1	.133	1	2.285	2	.623	1
4590		min		.355	2	.284	2	.036	2	2.087	1	.326	2
4591		max	B	-.297	2	-.402	2	.088	1	1.35	2	.634	1

Envelope Plate/Shell Principal Stresses (Continued)

	Plate		Sur...	Sigma1 [ksi]	LC	Sigma2 [ksi]	LC	Tau Max [k...	LC	Angle [rad]	LC	Von Mises [ksi]	LC
4592		min		-.528	1	-.703	1	.052	2	.779	1	.361	2
4593	P1149	max	T	.767	1	.475	1	.146	1	-.504	2	.67	1
4594		min		.444	2	.298	2	.073	2	-.714	1	.392	2
4595		max	B	-.306	2	-.509	2	.13	1	1.466	2	.704	1
4596		min		-.537	1	-.797	1	.102	2	1.224	1	.444	2
4597	P1150	max	T	.718	1	.474	1	.122	1	-.299	2	.632	1
4598		min		.456	2	.301	2	.077	2	-.499	1	.402	2
4599		max	B	-.309	2	-.53	2	.128	1	1.64	2	.687	1
4600		min		-.523	1	-.778	1	.11	2	1.506	1	.461	2
4601	P1151	max	T	.68	1	.456	1	.112	1	2.207	1	.6	1
4602		min		.367	2	.295	2	.036	2	-.68	2	.337	2
4603		max	B	-.308	2	-.419	2	.067	1	1.515	2	.62	1
4604		min		-.542	1	-.676	1	.055	2	1.009	1	.376	2
4605	P1152	max	T	.637	1	.471	1	.083	1	2.325	1	.572	1
4606		min		.37	2	.304	2	.033	2	-.482	2	.342	2
4607		max	B	-.311	2	-.431	2	.06	2	1.698	2	.606	1
4608		min		-.549	1	-.65	1	.051	1	1.378	1	.385	2
4609	P1153	max	T	.669	1	.485	1	.092	1	-.098	2	.599	1
4610		min		.454	2	.305	2	.074	2	-.255	1	.401	2
4611		max	B	-.309	2	-.534	2	.128	1	1.813	2	.673	1
4612		min		-.507	1	-.764	1	.113	2	1.779	1	.464	2
4613	P1154	max	T	.63	1	.504	1	.065	2	.094	2	.578	1
4614		min		.438	2	.309	2	.063	1	.056	1	.39	2
4615		max	B	-.307	2	-.525	2	.133	1	2.027	1	.669	1
4616		min		-.496	1	-.761	1	.109	2	1.976	2	.457	2
4617	P1155	max	T	.59	1	.491	1	.049	1	-.265	2	.547	1
4618		min		.366	2	.31	2	.028	2	-.718	1	.341	2
4619		max	B	-.309	2	-.437	2	.064	2	1.881	2	.597	1
4620		min		-.537	1	-.642	1	.053	1	1.841	1	.389	2
4621	P1156	max	T	.545	1	.512	1	.022	2	-.037	2	.53	1
4622		min		.354	2	.31	2	.017	1	-.778	1	.334	2
4623		max	B	-.301	2	-.435	2	.071	1	2.17	1	.593	1
4624		min		-.509	1	-.651	1	.067	2	2.046	2	.386	2
4625	P1157	max	T	.607	1	.514	1	.053	2	.464	1	.566	1
4626		min		.412	2	.305	2	.047	1	.256	2	.37	2
4627		max	B	-.297	2	-.503	2	.139	1	2.24	1	.667	1
4628		min		-.483	1	-.761	1	.103	2	2.122	2	.438	2
4629	P1158	max	T	.603	1	.51	1	.046	1	.905	1	.562	1
4630		min		.382	2	.301	2	.041	2	.386	2	.349	2
4631		max	B	-.286	2	-.471	2	.139	1	2.233	2	.658	1
4632		min		-.473	1	-.752	1	.092	2	-.73	1	.411	2
4633	P1159	max	T	.539	1	.5	1	.019	1	1.47	1	.521	1
4634		min		.338	2	.307	2	.015	2	.177	2	.323	2
4635		max	B	-.289	2	-.424	2	.091	1	2.188	2	.592	1
4636		min		-.479	1	-.662	1	.067	2	-.759	1	.375	2
4637	P1160	max	T	.552	1	.468	1	.042	1	1.462	1	.515	1
4638		min		.318	2	.298	2	.01	2	.335	2	.308	2
4639		max	B	-.276	2	-.405	2	.104	1	2.296	2	.588	1
4640		min		-.455	1	-.664	1	.065	2	-.603	1	.358	2
4641	P1161	max	T	.606	1	.495	1	.055	1	1.252	1	.559	1
4642		min		.351	2	.293	2	.029	2	.484	2	.326	2
4643		max	B	-.274	2	-.438	2	.137	1	2.328	2	.648	1
4644		min		-.467	1	-.74	1	.082	2	-.573	1	.384	2
4645	P1162	max	T	.596	1	.472	1	.062	1	1.519	1	.545	1
4646		min		.314	2	.279	2	.018	2	.43	2	.298	2
4647		max	B	-.258	2	-.395	2	.122	1	-.437	1	.619	1
4648		min		-.46	1	-.704	1	.068	2	-.761	2	.348	2

Envelope Plate/Shell Principal Stresses (Continued)

	Plate		Sur...	Sigma1 [ksi]	LC	Sigma2 [ksi]	LC	Tau Max [k...	LC	Angle [rad]	LC	Von Mises [ksi]	LC
4649	P1163	max	T	.557	1	.439	1	.059	1	1.55	1	.508	1
4650		min		.295	2	.284	2	.006	2	.389	2	.29	2
4651		max	B	-.26	2	-.381	2	.11	1	-.483	1	.577	1
4652		min		-.435	1	-.654	1	.06	2	-.772	2	.337	2
4653	P1164	max	T	.552	1	.411	1	.071	1	1.666	1	.497	1
4654		min		.273	2	.267	2	.003	2	-.145	2	.27	2
4655		max	B	-.244	2	-.352	2	.108	1	-.374	1	.557	1
4656		min		-.418	1	-.633	1	.054	2	-.723	2	.312	2
4657	P1165	max	T	.583	1	.446	1	.068	1	1.74	1	.528	1
4658		min		.286	2	.259	2	.013	2	.18	2	.273	2
4659		max	B	-.243	2	-.355	2	.104	1	-.311	1	.586	1
4660		min		-.454	1	-.661	1	.056	2	-.748	2	.315	2
4661	P1166	max	T	.563	1	.413	1	.075	1	1.947	1	.505	1
4662		min		.265	2	.23	2	.017	2	-.087	2	.249	2
4663		max	B	-.226	2	-.316	2	.081	1	2.356	2	.545	1
4664		min		-.446	1	-.608	1	.045	2	-.174	1	.282	2
4665	P1167	max	T	.538	1	.383	1	.077	1	1.796	1	.48	1
4666		min		.257	2	.24	2	.008	2	-.433	2	.249	2
4667		max	B	-.227	2	-.32	2	.097	1	-.271	1	.528	1
4668		min		-.404	1	-.598	1	.046	2	-.712	2	.285	2
4669	P1168	max	T	.517	1	.354	1	.082	1	1.936	1	.458	1
4670		min		.241	2	.211	2	.015	2	-.404	2	.228	2
4671		max	B	-.21	2	-.288	2	.081	1	-.166	1	.493	1
4672		min		-.391	1	-.554	1	.039	2	-.748	2	.258	2
4673	P1169	max	T	.541	1	.375	1	.083	1	2.134	1	.48	1
4674		min		.249	2	.198	2	.026	2	-.173	2	.228	2
4675		max	B	-.208	2	-.282	2	.057	1	2.252	2	.503	1
4676		min		-.436	1	-.55	1	.037	2	.007	1	.253	2
4677	P1170	max	T	.519	1	.33	1	.095	1	2.296	1	.455	1
4678		min		.235	2	.166	2	.034	2	-.189	2	.209	2
4679		max	B	-.186	2	-.254	2	.039	1	2.092	2	.461	1
4680		min		-.418	1	-.495	1	.034	2	.329	1	.227	2
4681	P1171	max	T	.492	1	.32	1	.086	1	2.083	1	.433	1
4682		min		.227	2	.181	2	.023	2	-.351	2	.208	2
4683		max	B	-.192	2	-.258	2	.061	1	2.296	2	.453	1
4684		min		-.379	1	-.502	1	.033	2	-.035	1	.232	2
4685	P1172	max	T	.467	1	.283	1	.092	1	2.228	1	.407	1
4686		min		.213	2	.152	2	.031	2	-.302	2	.19	2
4687		max	B	-.172	2	-.232	2	.042	1	2.141	2	.413	1
4688		min		-.365	1	-.448	1	.03	2	.179	1	.209	2
4689	P1173	max	T	.499	1	.281	1	.109	1	-.182	2	.433	1
4690		min		.222	2	.136	2	.043	2	-.712	1	.193	2
4691		max	B	-.16	2	-.233	2	.041	1	1.932	2	.425	1
4692		min		-.378	1	-.46	1	.036	2	.776	1	.206	2
4693	P1174	max	T	.479	1	.23	1	.124	1	-.171	2	.415	1
4694		min		.209	2	.107	2	.051	2	-.606	1	.181	2
4695		max	B	-.132	2	-.217	2	.062	1	1.814	2	.396	1
4696		min		-.319	1	-.443	1	.043	2	1.04	1	.189	2
4697	P1175	max	T	.442	1	.24	1	.101	1	-.262	2	.383	1
4698		min		.2	2	.123	2	.038	2	-.781	1	.175	2
4699		max	B	-.148	2	-.212	2	.033	1	1.975	2	.375	1
4700		min		-.338	1	-.404	1	.032	2	.585	1	.188	2
4701	P1176	max	T	.42	1	.194	1	.113	1	-.227	2	.364	1
4702		min		.188	2	.096	2	.046	2	-.668	1	.162	2
4703		max	B	-.121	2	-.197	2	.045	1	1.849	2	.344	1
4704		min		-.29	1	-.381	1	.038	2	.959	1	.172	2
4705	P1177	max	T	.461	1	.179	1	.141	1	-.16	2	.403	1

Envelope Plate/Shell Principal Stresses (Continued)

	Plate		Sur...	Sigma1 [ksi]	LC	Sigma2 [ksi]	LC	Tau Max [k...	LC	Angle [rad]	LC	Von Mises [ksi]	LC
4706		min		.197	2	.081	2	.058	2	-.524	1	.172	2
4707		max	B	-.104	2	-.205	2	.088	1	1.736	2	.377	1
4708		min		-.257	1	-.433	1	.05	2	1.165	1	.178	2
4709	P1178	max	T	.444	1	.13	1	.157	1	-.15	2	.395	1
4710		min		.187	2	.058	2	.064	2	-.462	1	.165	2
4711		max	B	-.079	2	-.195	2	.114	1	1.683	2	.367	1
4712		min		-.196	1	-.424	1	.058	2	1.232	1	.17	2
4713	P1179	max	T	.401	1	.146	1	.127	1	-.209	2	.351	1
4714		min		.176	2	.07	2	.053	2	-.577	1	.154	2
4715		max	B	-.095	2	-.185	2	.069	1	1.755	2	.323	1
4716		min		-.231	1	-.369	1	.045	2	1.131	1	.16	2
4717	P1180	max	T	.383	1	.1	1	.142	1	-.194	2	.344	1
4718		min		.166	2	.047	2	.059	2	-.509	1	.148	2
4719		max	B	-.07	2	-.175	2	.094	1	1.693	2	.312	1
4720		min		-.173	1	-.36	1	.053	2	1.212	1	.153	2
4721	P1181	max	T	.428	1	.086	1	.171	1	-.143	2	.393	1
4722		min		.177	2	.038	2	.069	2	-.414	1	.161	2
4723		max	B	-.056	2	-.186	2	.137	1	1.644	2	.366	1
4724		min		-.141	1	-.415	1	.065	2	1.272	1	.165	2
4725	P1182	max	T	.413	1	.047	1	.183	1	-.138	2	.392	1
4726		min		.167	2	.022	2	.073	2	-.378	1	.157	2
4727		max	B	-.037	2	-.178	2	.157	1	1.614	2	.369	1
4728		min		-.092	1	-.407	1	.071	2	1.297	1	.163	2
4729	P1183	max	T	.367	1	.056	1	.156	1	-.185	2	.343	1
4730		min		.155	2	.028	2	.064	2	-.458	1	.144	2
4731		max	B	-.047	2	-.167	2	.118	1	1.646	2	.311	1
4732		min		-.118	1	-.353	1	.06	2	1.254	1	.149	2
4733	P1184	max	T	.353	1	.018	1	.167	1	-.18	2	.344	1
4734		min		.146	2	.011	2	.067	2	-.422	1	.141	2
4735		max	B	-.028	2	-.159	2	.138	1	1.609	2	.317	1
4736		min		-.069	1	-.346	1	.066	2	1.276	1	.147	2
4737	P1185	max	T	.399	1	.016	1	.192	1	-.133	2	.391	1
4738		min		.158	2	.009	2	.075	2	-.35	1	.154	2
4739		max	B	-.021	2	-.171	2	.173	1	1.589	2	.374	1
4740		min		-.052	1	-.398	1	.075	2	1.312	1	.162	2
4741	P1186	max	T	.385	1	0	2	.196	1	-.126	2	.388	1
4742		min		.15	2	-.007	1	.075	2	-.327	1	.15	2
4743		max	B	-.01	2	-.164	2	.184	1	1.57	2	.378	1
4744		min		-.021	1	-.388	1	.077	2	1.322	1	.16	2
4745	P1187	max	T	.339	1	-.001	2	.176	1	-.178	2	.345	1
4746		min		.137	2	-.013	1	.069	2	-.397	1	.138	2
4747		max	B	-.013	2	-.152	2	.154	1	1.577	2	.325	1
4748		min		-.029	1	-.338	1	.07	2	1.286	1	.146	2
4749	P1188	max	T	.325	1	-.009	2	.179	1	-.175	2	.343	1
4750		min		.129	2	-.034	1	.069	2	-.378	1	.133	2
4751		max	B	0	1	-.145	2	.165	1	1.551	2	.33	1
4752		min		-.002	2	-.329	1	.072	2	1.289	1	.144	2
4753	P1189	max	T	.371	1	-.004	2	.196	1	-.116	2	.381	1
4754		min		.143	2	-.021	1	.074	2	-.305	1	.145	2
4755		max	B	0	1	-.158	2	.189	1	1.556	2	.377	1
4756		min		-.002	2	-.377	1	.078	2	1.331	1	.157	2
4757	P1190	max	T	.357	1	-.005	2	.191	1	-.097	2	.37	1
4758		min		.137	2	-.025	1	.071	2	-.28	1	.139	2
4759		max	B	.012	1	-.152	2	.189	1	1.55	2	.372	1
4760		min		.002	2	-.365	1	.077	2	1.342	1	.153	2
4761	P1191	max	T	.31	1	-.012	2	.178	1	-.169	2	.335	1
4762		min		.121	2	-.045	1	.067	2	-.363	1	.127	2

Envelope Plate/Shell Principal Stresses (Continued)

	Plate		Sur...	Sigma1 [ksi]	LC	Sigma2 [ksi]	LC	Tau Max [k...	LC	Angle [rad]	LC	Von Mises [ksi]	LC
4763		max	B	.02	1	-.138	2	.17	1	1.532	2	.329	1
4764		min		.004	2	-.319	1	.071	2	1.29	1	.141	2
4765	P1192	max	T	.295	1	-.012	2	.17	1	-.153	2	.32	1
4766		min		.113	2	-.045	1	.062	2	-.344	1	.119	2
4767		max	B	.028	1	-.132	2	.168	1	1.52	2	.322	1
4768		min		.006	2	-.307	1	.069	2	1.294	1	.135	2
4769	P1193	max	T	.343	1	-.004	2	.182	1	-.067	2	.354	1
4770		min		.132	2	-.021	1	.068	2	-.238	1	.134	2
4771		max	B	.014	1	-.147	2	.183	1	1.553	2	.36	1
4772		min		.002	2	-.352	1	.074	2	1.366	1	.148	2
4773	P1194	max	T	.328	1	0	2	.167	1	-.023	2	.33	1
4774		min		.131	2	-.005	1	.066	2	-.125	1	.131	2
4775		max	B	.004	1	-.144	2	.17	1	1.564	2	.338	1
4776		min		0	2	-.335	1	.072	2	1.459	1	.144	2
4777	P1195	max	T	.278	1	-.007	2	.156	1	-.119	2	.297	1
4778		min		.107	2	-.034	1	.057	2	-.306	1	.111	2
4779		max	B	.025	1	-.126	2	.158	1	1.522	2	.305	1
4780		min		.005	2	-.292	1	.065	2	1.314	1	.128	2
4781	P1196	max	T	.256	1	-.002	2	.133	1	-.05	2	.261	1
4782		min		.105	2	-.009	1	.053	2	-.17	1	.106	2
4783		max	B	.007	1	-.123	2	.139	1	1.547	2	.275	1
4784		min		.001	2	-.271	1	.062	2	1.424	1	.123	2
4785	P1197	max	T	.182	1	-.004	2	.098	1	.234	1	.189	1
4786		min		.058	2	-.014	1	.031	2	.15	2	.06	2
4787		max	B	.009	1	-.111	2	.133	1	1.725	1	.262	1
4788		min		.003	2	-.257	1	.057	2	1.622	2	.112	2
4789	P1198	max	T	.215	1	-.014	2	.131	1	.383	1	.242	1
4790		min		.066	2	-.046	1	.04	2	.276	2	.074	2
4791		max	B	.033	1	-.113	2	.154	1	1.844	1	.293	1
4792		min		.009	2	-.275	1	.061	2	1.663	2	.118	2
4793	P1199	max	T	.098	1	-.009	2	.064	1	.458	1	.116	1
4794		min		.029	2	-.031	1	.019	2	.385	2	.034	2
4795		max	B	.018	1	-.085	2	.095	1	1.832	1	.181	1
4796		min		.004	2	-.171	1	.045	2	1.68	2	.087	2
4797	P1200	max	T	.145	1	-.027	2	.115	1	.558	1	.201	1
4798		min		.042	2	-.085	1	.034	2	.483	2	.06	2
4799		max	B	.059	1	-.088	2	.129	1	1.967	1	.235	1
4800		min		.016	2	-.2	1	.052	2	1.749	2	.097	2
4801	P1201	max	T	.239	1	-.022	2	.15	1	.408	1	.275	1
4802		min		.076	2	-.061	1	.049	2	.297	2	.088	2
4803		max	B	.042	1	-.118	2	.165	1	1.865	1	.312	1
4804		min		.015	2	-.289	1	.066	2	1.656	2	.126	2
4805	P1202	max	T	.26	1	-.025	2	.159	1	.415	1	.294	1
4806		min		.085	2	-.059	1	.055	2	.295	2	.1	2
4807		max	B	.036	1	-.124	2	.168	1	1.867	1	.319	1
4808		min		.016	2	-.3	1	.07	2	1.633	2	.132	2
4809	P1203	max	T	.17	1	-.037	2	.138	1	.54	1	.241	1
4810		min		.052	2	-.105	1	.045	2	.445	2	.078	2
4811		max	B	.076	1	-.094	2	.146	1	1.965	1	.263	1
4812		min		.024	2	-.216	1	.059	2	1.729	2	.108	2
4813	P1204	max	T	.189	1	-.042	2	.148	1	.518	1	.26	1
4814		min		.062	2	-.107	1	.052	2	.406	2	.09	2
4815		max	B	.075	1	-.1	2	.151	1	1.946	1	.272	1
4816		min		.027	2	-.227	1	.064	2	1.688	2	.116	2
4817	P1205	max	T	.278	1	-.022	2	.161	1	.422	1	.302	1
4818		min		.095	2	-.043	1	.058	2	.287	2	.107	2
4819		max	B	.017	1	-.129	2	.163	1	1.866	1	.318	1

Envelope Plate/Shell Principal Stresses (Continued)

	Plate		Sur...	Sigma1 [ksi]	LC	Sigma2 [ksi]	LC	Tau Max [k...	LC	Angle [rad]	LC	Von Mises [ksi]	LC
4820		min		.012	2	-.309	1	.071	2	1.602	2	.136	2
4821	P1206	max	T	.295	1	-.014	2	.155	1	.438	1	.302	1
4822		min		.104	2	-.015	1	.059	2	.281	2	.112	2
4823		max	B	.004	2	-.136	2	.15	1	1.868	1	.309	1
4824		min		-.016	1	-.317	1	.07	2	1.566	2	.138	2
4825	P1207	max	T	.206	1	-.039	2	.149	1	.507	1	.264	1
4826		min		.071	2	-.091	1	.055	2	.375	2	.097	2
4827		max	B	.057	1	-.106	2	.146	1	1.929	1	.268	1
4828		min		.024	2	-.235	1	.065	2	1.641	2	.12	2
4829	P1208	max	T	.221	1	-.031	2	.141	1	.512	1	.258	1
4830		min		.08	2	-.062	1	.056	2	.353	2	.099	2
4831		max	B	.023	1	-.112	2	.132	1	1.92	1	.254	1
4832		min		.016	2	-.241	1	.064	2	1.591	2	.121	2
4833	P1209	max	T	.311	1	.025	1	.143	1	.468	1	.299	1
4834		min		.113	2	-.001	2	.057	2	.28	2	.114	2
4835		max	B	-.009	2	-.142	2	.132	1	1.879	1	.298	1
4836		min		-.06	1	-.324	1	.067	2	1.527	2	.138	2
4837	P1210	max	T	.328	1	.073	1	.128	1	.519	1	.299	1
4838		min		.123	2	.016	2	.053	2	.287	2	.116	2
4839		max	B	-.026	2	-.15	2	.109	1	1.907	1	.291	1
4840		min		-.114	1	-.331	1	.062	2	1.485	2	.138	2
4841	P1211	max	T	.237	1	-.017	2	.129	1	.539	1	.248	1
4842		min		.089	2	-.02	1	.053	2	.343	2	.099	2
4843		max	B	.003	2	-.118	2	.112	1	1.927	1	.237	1
4844		min		-.022	1	-.247	1	.061	2	1.54	2	.12	2
4845	P1212	max	T	.255	1	.029	1	.113	1	.596	1	.242	1
4846		min		.099	2	0	2	.049	2	.347	2	.099	2
4847		max	B	-.015	2	-.126	2	.088	1	1.962	1	.225	1
4848		min		-.077	1	-.254	1	.055	2	1.488	2	.119	2
4849	P1213	max	T	.348	1	.125	1	.111	1	.601	1	.305	1
4850		min		.133	2	.037	2	.048	2	.305	2	.119	2
4851		max	B	-.047	2	-.158	2	.083	1	1.967	1	.294	1
4852		min		-.173	1	-.34	1	.056	2	1.44	2	.141	2
4853	P1214	max	T	.372	1	.178	1	.097	1	.723	1	.323	1
4854		min		.143	2	.061	2	.041	2	.34	2	.125	2
4855		max	B	-.07	2	-.168	2	.058	1	2.093	1	.31	1
4856		min		-.235	1	-.352	1	.049	2	1.39	2	.146	2
4857	P1215	max	T	.278	1	.081	1	.098	1	.694	1	.247	1
4858		min		.109	2	.023	2	.043	2	.37	2	.1	2
4859		max	B	-.037	2	-.134	2	.063	1	2.052	1	.229	1
4860		min		-.137	1	-.264	1	.049	2	1.432	2	.12	2
4861	P1216	max	T	.307	1	.13	1	.089	1	.836	1	.267	1
4862		min		.12	2	.047	2	.037	2	.418	2	.105	2
4863		max	B	-.06	2	-.143	2	.043	1	2.267	1	.25	1
4864		min		-.195	1	-.281	1	.041	2	1.371	2	.124	2
4865	P1217	max	T	.404	1	.226	1	.089	1	.886	1	.351	1
4866		min		.155	2	.086	2	.034	2	.399	2	.134	2
4867		max	B	-.094	2	-.179	2	.042	2	1.33	2	.339	1
4868		min		-.291	1	-.373	1	.041	1	-.779	1	.155	2
4869	P1218	max	T	.444	1	.264	1	.09	1	1.069	1	.387	1
4870		min		.166	2	.114	2	.026	2	.491	2	.147	2
4871		max	B	-.119	2	-.193	2	.042	1	1.252	2	.378	1
4872		min		-.329	1	-.412	1	.037	2	-.394	1	.168	2
4873	P1219	max	T	.346	1	.172	1	.087	1	1.007	1	.3	1
4874		min		.133	2	.072	2	.03	2	.503	2	.115	2
4875		max	B	-.085	2	-.154	2	.04	1	1.297	2	.285	1
4876		min		-.237	1	-.316	1	.034	2	-.505	1	.133	2

Envelope Plate/Shell Principal Stresses (Continued)

	Plate		Sur...	Sigma1 [ksi]	LC	Sigma2 [ksi]	LC	Tau Max [k...	LC	Angle [rad]	LC	Von Mises [ksi]	LC
4877	P1220	max	T	.392	1	.204	1	.094	1	1.17	1	.34	1
4878		min		.147	2	.097	2	.025	2	.64	2	.129	2
4879		max	B	-.11	2	-.166	2	.054	1	1.204	2	.329	1
4880		min		-.261	1	-.369	1	.028	2	-.227	1	.146	2
4881	P1221	max	T	.49	1	.294	1	.098	1	1.239	1	.427	1
4882		min		.181	2	.139	2	.021	2	.66	2	.164	2
4883		max	B	-.144	2	-.208	2	.058	1	1.173	2	.421	1
4884		min		-.35	1	-.467	1	.032	2	-.141	1	.185	2
4885	P1222	max	T	.539	1	.316	1	.111	1	1.379	1	.469	1
4886		min		.198	2	.163	2	.017	2	.909	2	.183	2
4887		max	B	-.168	2	-.226	2	.078	1	1.082	2	.464	1
4888		min		-.367	1	-.522	1	.029	2	0	1	.203	2
4889	P1223	max	T	.442	1	.23	1	.106	1	1.304	1	.383	1
4890		min		.164	2	.12	2	.022	2	.836	2	.147	2
4891		max	B	-.134	2	-.181	2	.074	1	1.086	2	.375	1
4892		min		-.279	1	-.426	1	.023	2	-.084	1	.163	2
4893	P1224	max	T	.492	1	.25	1	.121	1	1.411	1	.426	1
4894		min		.184	2	.139	2	.022	2	1.054	2	.166	2
4895		max	B	-.157	2	-.198	2	.092	1	.949	2	.419	1
4896		min		-.295	1	-.48	1	.02	2	.003	1	.181	2
4897	P1225	max	T	.584	1	.334	1	.125	1	1.496	1	.507	1
4898		min		.219	2	.183	2	.018	2	1.192	2	.204	2
4899		max	B	-.191	2	-.246	2	.095	1	1.004	2	.504	1
4900		min		-.382	1	-.571	1	.028	2	.099	1	.224	2
4901	P1226	max	T	.622	1	.348	1	.137	1	1.595	1	.54	1
4902		min		.243	2	.2	2	.021	2	1.417	2	.224	2
4903		max	B	-.213	2	-.267	2	.107	1	.96	2	.537	1
4904		min		-.398	1	-.611	1	.027	2	.179	1	.245	2
4905	P1227	max	T	.536	1	.267	1	.134	1	1.5	1	.464	1
4906		min		.206	2	.156	2	.025	2	1.239	2	.186	2
4907		max	B	-.179	2	-.216	2	.108	1	.818	2	.458	1
4908		min		-.311	1	-.526	1	.019	2	.068	1	.2	2
4909	P1228	max	T	.573	1	.282	1	.145	1	1.576	1	.496	1
4910		min		.229	2	.17	2	.03	2	1.376	2	.206	2
4911		max	B	-.199	2	-.235	2	.118	1	.717	2	.49	1
4912		min		-.328	1	-.563	1	.018	2	.123	1	.219	2
4913	P1229	max	T	.65	1	.36	1	.145	1	1.686	1	.564	1
4914		min		.266	2	.215	2	.026	2	1.578	2	.245	2
4915		max	B	-.234	2	-.288	2	.112	1	.961	2	.562	1
4916		min		-.415	1	-.639	1	.027	2	.256	1	.265	2
4917	P1230	max	T	.665	1	.371	1	.147	1	1.771	1	.577	1
4918		min		.287	2	.23	2	.029	2	1.705	2	.263	2
4919		max	B	-.255	2	-.306	2	.109	1	1.014	2	.575	1
4920		min		-.434	1	-.652	1	.026	2	.331	1	.284	2
4921	P1231	max	T	.6	1	.296	1	.152	1	1.644	1	.519	1
4922		min		.251	2	.183	2	.034	2	1.48	2	.225	2
4923		max	B	-.219	2	-.253	2	.122	1	.648	2	.513	1
4924		min		-.346	1	-.589	1	.017	2	.173	1	.237	2
4925	P1232	max	T	.616	1	.308	1	.154	1	1.706	1	.533	1
4926		min		.27	2	.196	2	.037	2	1.561	2	.242	2
4927		max	B	-.238	2	-.267	2	.119	1	.6	2	.526	1
4928		min		-.366	1	-.603	1	.014	2	.216	1	.254	2
4929	P1233	max	T	.666	1	.382	1	.142	1	1.851	1	.579	1
4930		min		.305	2	.244	2	.03	2	1.815	2	.279	2
4931		max	B	-.275	2	-.322	2	.098	1	1.131	2	.578	1
4932		min		-.454	1	-.651	1	.023	2	.405	1	.301	2
4933	P1234	max	T	.654	1	.393	1	.13	1	1.923	1	.57	1

Envelope Plate/Shell Principal Stresses (Continued)

	Plate		Sur...	Sigma1 [ksi]	LC	Sigma2 [ksi]	LC	Tau Max [k...	LC	Angle [rad]	LC	Von Mises [ksi]	LC
4934		min		.317	2	.257	2	.03	2	1.913	2	.291	2
4935		max	B	-.292	2	-.334	2	.079	1	1.329	2	.572	1
4936		min		-.477	1	-.635	1	.021	2	.475	1	.315	2
4937	P1235	max	T	.621	1	.321	1	.15	1	1.76	1	.537	1
4938		min		.286	2	.208	2	.039	2	1.628	2	.256	2
4939		max	B	-.258	2	-.278	2	.11	1	.535	2	.531	1
4940		min		-.386	1	-.605	1	.01	2	.249	1	.268	2
4941	P1236	max	T	.615	1	.332	1	.141	1	1.804	1	.533	1
4942		min		.297	2	.219	2	.039	2	1.681	2	.267	2
4943		max	B	-.275	2	-.285	2	.095	1	.285	2	.528	1
4944		min		-.406	1	-.596	1	.005	2	.261	1	.28	2
4945	P1237	max	T	.63	1	.406	1	.112	1	1.998	2	.553	1
4946		min		.322	2	.27	2	.026	2	1.98	1	.3	2
4947		max	B	-.302	2	-.346	2	.053	1	1.601	2	.561	1
4948		min		-.501	1	-.606	1	.022	2	.527	1	.326	2
4949	P1238	max	T	.6	1	.42	1	.09	1	2.057	2	.533	1
4950		min		.322	2	.28	2	.021	2	2.004	1	.303	2
4951		max	B	-.304	2	-.356	2	.026	2	1.87	2	.55	1
4952		min		-.526	1	-.572	1	.023	1	.464	1	.333	2
4953	P1239	max	T	.601	1	.343	1	.129	1	1.832	1	.522	1
4954		min		.304	2	.227	2	.038	2	1.718	2	.274	2
4955		max	B	-.283	2	-.296	2	.078	1	.234	1	.52	1
4956		min		-.424	1	-.58	1	.007	2	-.43	2	.289	2
4957	P1240	max	T	.582	1	.352	1	.115	1	1.837	1	.507	1
4958		min		.306	2	.233	2	.036	2	1.74	2	.277	2
4959		max	B	-.28	2	-.309	2	.063	1	.136	1	.511	1
4960		min		-.436	1	-.563	1	.015	2	-.589	2	.295	2
4961	P1241	max	T	.569	1	.43	1	.07	1	2.059	2	.514	1
4962		min		.317	2	.285	2	.016	2	1.967	1	.303	2
4963		max	B	-.299	2	-.364	2	.033	2	2.077	2	.542	1
4964		min		-.523	1	-.559	1	.018	1	-.388	1	.336	2
4965	P1242	max	T	.548	1	.431	1	.059	1	1.97	2	.5	1
4966		min		.309	2	.285	2	.012	2	1.85	1	.298	2
4967		max	B	-.288	2	-.367	2	.046	1	2.23	2	.538	1
4968		min		-.486	1	-.578	1	.04	2	-.528	1	.335	2
4969	P1243	max	T	.563	1	.355	1	.104	1	1.816	1	.493	1
4970		min		.304	2	.236	2	.034	2	1.749	2	.276	2
4971		max	B	-.272	2	-.319	2	.059	1	-.031	1	.504	1
4972		min		-.435	1	-.553	1	.023	2	-.598	2	.298	2
4973	P1244	max	T	.547	1	.352	1	.097	1	1.776	1	.48	1
4974		min		.299	2	.234	2	.033	2	1.752	2	.272	2
4975		max	B	-.261	2	-.323	2	.067	1	-.173	1	.499	1
4976		min		-.418	1	-.553	1	.031	2	-.574	2	.297	2
4977	P1245	max	T	.539	1	.417	1	.061	1	1.853	2	.49	1
4978		min		.3	2	.277	2	.012	2	1.724	1	.289	2
4979		max	B	-.274	2	-.363	2	.071	1	2.344	2	.536	1
4980		min		-.45	1	-.593	1	.045	2	-.487	1	.328	2
4981	P1246	max	T	.536	1	.396	1	.07	1	1.824	2	.482	1
4982		min		.289	2	.264	2	.013	2	1.673	1	.278	2
4983		max	B	-.258	2	-.353	2	.09	1	-.421	1	.532	1
4984		min		-.419	1	-.598	1	.047	2	-.713	2	.316	2
4985	P1247	max	T	.535	1	.341	1	.097	1	1.763	2	.469	1
4986		min		.291	2	.228	2	.032	2	1.738	1	.265	2
4987		max	B	-.247	2	-.322	2	.082	1	-.236	1	.495	1
4988		min		-.393	1	-.556	1	.037	2	-.542	2	.292	2
4989	P1248	max	T	.524	1	.325	1	.1	1	1.791	2	.458	1
4990		min		.279	2	.218	2	.031	2	1.722	1	.254	2

Envelope Plate/Shell Principal Stresses (Continued)

	Plate		Sur...	Sigma1 [ksi]	LC	Sigma2 [ksi]	LC	Tau Max [k...	LC	Angle [rad]	LC	Von Mises [ksi]	LC
4991		max	B	-.232	2	-.314	2	.095	1	-.244	1	.49	1
4992		min		-.366	1	-.556	1	.041	2	-.511	2	.282	2
4993	P1249	max	T	.532	1	.371	1	.08	1	1.889	2	.472	1
4994		min		.275	2	.248	2	.013	2	1.687	1	.263	2
4995		max	B	-.241	2	-.335	2	.1	1	-.351	1	.522	1
4996		min		-.393	1	-.593	1	.047	2	-.655	2	.3	2
4997	P1250	max	T	.521	1	.346	1	.087	1	2.024	2	.459	1
4998		min		.258	2	.23	2	.014	2	1.739	1	.245	2
4999		max	B	-.225	2	-.314	2	.102	1	-.282	1	.505	1
5000		min		-.37	1	-.575	1	.044	2	-.623	2	.28	2
5001	P1251	max	T	.512	1	.305	1	.104	1	1.841	2	.446	1
5002		min		.264	2	.206	2	.029	2	1.732	1	.241	2
5003		max	B	-.217	2	-.301	2	.104	1	-.223	1	.479	1
5004		min		-.341	1	-.548	1	.042	2	-.488	2	.269	2
5005	P1252	max	T	.495	1	.283	1	.106	1	1.917	2	.43	1
5006		min		.247	2	.193	2	.027	2	1.763	1	.225	2
5007		max	B	-.202	2	-.283	2	.107	1	-.191	1	.463	1
5008		min		-.318	1	-.531	1	.041	2	-.478	2	.252	2
5009	P1253	max	T	.503	1	.321	1	.091	1	2.207	2	.441	1
5010		min		.24	2	.21	2	.015	2	1.817	1	.226	2
5011		max	B	-.209	2	-.288	2	.097	1	-.211	1	.479	1
5012		min		-.352	1	-.546	1	.04	2	-.621	2	.258	2
5013	P1254	max	T	.478	1	.294	1	.092	1	1.915	1	.418	1
5014		min		.222	2	.188	2	.017	2	-.738	2	.207	2
5015		max	B	-.193	2	-.261	2	.086	1	-.136	1	.447	1
5016		min		-.336	1	-.507	1	.034	2	-.659	2	.234	2
5017	P1255	max	T	.473	1	.26	1	.106	1	2.025	2	.41	1
5018		min		.227	2	.178	2	.025	2	1.819	1	.207	2
5019		max	B	-.187	2	-.261	2	.103	1	-.147	1	.439	1
5020		min		-.298	1	-.504	1	.037	2	-.488	2	.233	2
5021	P1256	max	T	.445	1	.236	1	.104	1	2.169	2	.386	1
5022		min		.207	2	.161	2	.023	2	1.889	1	.188	2
5023		max	B	-.172	2	-.237	2	.094	1	-.098	1	.407	1
5024		min		-.28	1	-.467	1	.033	2	-.527	2	.212	2
5025	P1257	max	T	.45	1	.265	1	.092	1	2.028	1	.392	1
5026		min		.206	2	.163	2	.021	2	-.572	2	.188	2
5027		max	B	-.176	2	-.234	2	.069	1	-.047	1	.409	1
5028		min		-.322	1	-.46	1	.029	2	-.752	2	.211	2
5029	P1258	max	T	.419	1	.233	1	.093	1	2.152	1	.364	1
5030		min		.191	2	.137	2	.027	2	-.45	2	.17	2
5031		max	B	-.157	2	-.209	2	.05	1	2.233	2	.368	1
5032		min		-.308	1	-.408	1	.026	2	.086	1	.189	2
5033	P1259	max	T	.413	1	.21	1	.101	1	2.339	2	.357	1
5034		min		.188	2	.141	2	.023	2	1.976	1	.169	2
5035		max	B	-.157	2	-.212	2	.08	1	-.039	1	.37	1
5036		min		-.264	1	-.423	1	.027	2	-.611	2	.19	2
5037	P1260	max	T	.378	1	.181	1	.098	1	2.078	1	.327	1
5038		min		.17	2	.12	2	.025	2	-.634	2	.151	2
5039		max	B	-.14	2	-.188	2	.062	1	.042	1	.329	1
5040		min		-.249	1	-.373	1	.024	2	-.762	2	.169	2
5041	P1261	max	T	.39	1	.196	1	.097	1	2.28	1	.338	1
5042		min		.177	2	.11	2	.034	2	-.365	2	.155	2
5043		max	B	-.135	2	-.19	2	.034	1	2.049	2	.329	1
5044		min		-.29	1	-.357	1	.027	2	.35	1	.169	2
5045	P1262	max	T	.364	1	.154	1	.105	1	-.308	2	.316	1
5046		min		.165	2	.084	2	.041	2	-.743	1	.143	2
5047		max	B	-.11	2	-.174	2	.033	1	1.894	2	.294	1

Envelope Plate/Shell Principal Stresses (Continued)

	Plate		Sur...	Sigma1 [ksi]	LC	Sigma2 [ksi]	LC	Tau Max [k...	LC	Angle [rad]	LC	Von Mises [ksi]	LC
5048		min		-.255	1	-.321	1	.032	2	.79	1	.153	2
5049	P1263	max	T	.343	1	.148	1	.098	1	2.193	1	.298	1
5050		min		.154	2	.095	2	.03	2	-.502	2	.135	2
5051		max	B	-.121	2	-.167	2	.043	1	2.173	2	.286	1
5052		min		-.233	1	-.32	1	.023	2	.187	1	.149	2
5053	P1264	max	T	.311	1	.11	1	.1	1	2.311	1	.273	1
5054		min		.141	2	.07	2	.035	2	-.408	2	.122	2
5055		max	B	-.097	2	-.15	2	.03	1	1.977	2	.247	1
5056		min		-.211	1	-.271	1	.027	2	.509	1	.132	2
5057	P1265	max	T	.341	1	.11	1	.116	1	-.27	2	.302	1
5058		min		.153	2	.058	2	.047	2	-.643	1	.134	2
5059		max	B	-.084	2	-.163	2	.051	1	1.786	2	.269	1
5060		min		-.203	1	-.305	1	.039	2	1.065	1	.141	2
5061	P1266	max	T	.322	1	.064	1	.129	1	-.247	2	.295	1
5062		min		.142	2	.035	2	.053	2	-.567	1	.128	2
5063		max	B	-.059	2	-.153	2	.075	1	1.709	2	.256	1
5064		min		-.145	1	-.295	1	.047	2	1.179	1	.134	2
5065	P1267	max	T	.284	1	.068	1	.108	1	-.347	2	.257	1
5066		min		.128	2	.045	2	.042	2	-.723	1	.113	2
5067		max	B	-.072	2	-.138	2	.037	1	1.834	2	.215	1
5068		min		-.169	1	-.243	1	.033	2	.923	1	.12	2
5069	P1268	max	T	.261	1	.024	1	.119	1	-.311	2	.25	1
5070		min		.117	2	.021	2	.048	2	-.637	1	.108	2
5071		max	B	-.047	2	-.128	2	.058	1	1.734	2	.199	1
5072		min		-.114	1	-.229	1	.04	2	1.117	1	.112	2
5073	P1269	max	T	.305	1	.021	1	.142	1	-.235	2	.295	1
5074		min		.132	2	.015	2	.059	2	-.512	1	.125	2
5075		max	B	-.037	2	-.145	2	.099	1	1.651	2	.256	1
5076		min		-.09	1	-.289	1	.054	2	1.228	1	.13	2
5077	P1270	max	T	.29	1	-.002	2	.154	1	-.232	2	.3	1
5078		min		.123	2	-.018	1	.062	2	-.476	1	.124	2
5079		max	B	-.017	2	-.137	2	.121	1	1.603	2	.264	1
5080		min		-.041	1	-.282	1	.06	2	1.248	1	.129	2
5081	P1271	max	T	.242	1	0	2	.132	1	-.295	2	.253	1
5082		min		.107	2	-.021	1	.053	2	-.575	1	.107	2
5083		max	B	-.024	2	-.12	2	.082	1	1.659	2	.199	1
5084		min		-.058	1	-.222	1	.048	2	1.188	1	.11	2
5085	P1272	max	T	.227	1	-.018	2	.144	1	-.294	2	.263	1
5086		min		.097	2	-.061	1	.057	2	-.538	1	.107	2
5087		max	B	-.005	2	-.112	2	.104	1	1.596	2	.213	1
5088		min		-.007	1	-.216	1	.054	2	1.209	1	.11	2
5089	P1273	max	T	.277	1	-.014	2	.163	1	-.234	2	.304	1
5090		min		.114	2	-.049	1	.064	2	-.454	1	.121	2
5091		max	B	0	1	-.13	2	.138	1	1.561	2	.275	1
5092		min		-.002	2	-.276	1	.064	2	1.251	1	.129	2
5093	P1274	max	T	.263	1	-.022	2	.166	1	-.24	2	.304	1
5094		min		.105	2	-.069	1	.063	2	-.444	1	.117	2
5095		max	B	.029	1	-.123	2	.149	1	1.524	2	.284	1
5096		min		.008	2	-.268	1	.066	2	1.244	1	.127	2
5097	P1275	max	T	.214	1	-.031	2	.154	1	-.304	2	.273	1
5098		min		.088	2	-.094	1	.06	2	-.521	1	.107	2
5099		max	B	.035	1	-.105	2	.123	1	1.539	2	.231	1
5100		min		.011	2	-.211	1	.058	2	1.205	1	.111	2
5101	P1276	max	T	.201	1	-.038	2	.159	1	-.323	2	.278	1
5102		min		.08	2	-.116	1	.059	2	-.521	1	.104	2
5103		max	B	.066	1	-.099	2	.136	1	1.485	2	.245	1
5104		min		.021	2	-.205	1	.06	2	1.185	1	.11	2

Envelope Plate/Shell Principal Stresses (Continued)

	Plate		Sur...	Sigma1 [ksi]	LC	Sigma2 [ksi]	LC	Tau Max [k...	LC	Angle [rad]	LC	Von Mises [ksi]	LC
5105	P1277	max	T	.249	1	-.024	2	.164	1	-.244	2	.296	1
5106		min		.096	2	-.079	1	.06	2	-.439	1	.11	2
5107		max	B	.047	1	-.116	2	.153	1	1.493	2	.285	1
5108		min		.013	2	-.259	1	.065	2	1.233	1	.123	2
5109	P1278	max	T	.233	1	-.021	2	.154	1	-.241	2	.278	1
5110		min		.088	2	-.075	1	.054	2	-.435	1	.1	2
5111		max	B	.052	1	-.109	2	.149	1	1.472	2	.276	1
5112		min		.013	2	-.246	1	.061	2	1.222	1	.116	2
5113	P1279	max	T	.189	1	-.04	2	.157	1	-.348	2	.274	1
5114		min		.071	2	-.125	1	.055	2	-.533	1	.097	2
5115		max	B	.084	1	-.092	2	.141	1	1.436	2	.251	1
5116		min		.025	2	-.198	1	.058	2	1.156	1	.106	2
5117	P1280	max	T	.174	1	-.035	2	.146	1	-.374	2	.255	1
5118		min		.063	2	-.119	1	.049	2	-.554	1	.085	2
5119		max	B	.087	1	-.084	2	.137	1	1.392	2	.242	1
5120		min		.023	2	-.187	1	.054	2	1.122	1	.098	2
5121	P1281	max	T	.212	1	-.013	2	.134	1	-.214	2	.245	1
5122		min		.08	2	-.056	1	.047	2	-.413	1	.087	2
5123		max	B	.042	1	-.102	2	.136	1	1.468	2	.253	1
5124		min		.009	2	-.229	1	.055	2	1.229	1	.107	2
5125	P1282	max	T	.181	1	-.003	2	.099	1	-.106	2	.19	1
5126		min		.076	2	-.017	1	.04	2	-.261	1	.077	2
5127		max	B	.013	1	-.098	2	.108	1	1.514	2	.209	1
5128		min		.002	2	-.202	1	.05	2	1.356	1	.1	2
5129	P1283	max	T	.152	1	-.023	2	.123	1	-.385	2	.216	1
5130		min		.053	2	-.094	1	.038	2	-.569	1	.068	2
5131		max	B	.071	1	-.077	2	.121	1	1.369	2	.215	1
5132		min		.015	2	-.17	1	.046	2	1.098	1	.085	2
5133	P1284	max	T	.107	1	-.007	2	.071	1	-.252	2	.127	1
5134		min		.044	2	-.034	1	.025	2	-.462	1	.048	2
5135		max	B	.025	1	-.071	2	.079	1	1.444	2	.146	1
5136		min		.004	2	-.132	1	.038	2	1.213	1	.073	2
5137	P1285	max	T	.04	1	-.028	2	.063	1	.907	2	.111	1
5138		min		.01	2	-.085	1	.019	2	.89	1	.034	2
5139		max	B	.042	1	-.057	2	.067	1	2.09	1	.118	1
5140		min		.008	2	-.091	1	.033	2	1.806	2	.061	2
5141	P1286	max	T	.091	1	-.051	2	.121	1	.771	1	.212	1
5142		min		.024	2	-.151	1	.038	2	.739	2	.066	2
5143		max	B	.107	1	-.064	2	.12	1	2.152	1	.209	1
5144		min		.027	2	-.134	1	.045	2	1.894	2	.081	2
5145	P1287	max	T	.019	1	-.065	2	.103	1	1.171	2	.196	1
5146		min		.004	2	-.186	1	.035	2	1.156	1	.067	2
5147		max	B	.108	1	-.031	2	.075	1	2.09	2	.133	1
5148		min		.019	2	-.041	1	.025	2	-.658	1	.044	2
5149	P1288	max	T	.057	1	-.088	2	.154	1	.937	1	.283	1
5150		min		.014	2	-.251	1	.051	2	.921	2	.096	2
5151		max	B	.186	1	-.044	2	.136	1	2.348	1	.241	1
5152		min		.047	2	-.086	1	.045	2	2.095	2	.079	2
5153	P1289	max	T	.111	1	-.062	2	.142	1	.693	1	.247	1
5154		min		.032	2	-.173	1	.047	2	.621	2	.082	2
5155		max	B	.129	1	-.07	2	.139	1	2.101	1	.241	1
5156		min		.038	2	-.148	1	.054	2	1.836	2	.095	2
5157	P1290	max	T	.124	1	-.065	2	.148	1	.637	1	.258	1
5158		min		.039	2	-.173	1	.052	2	.536	2	.092	2
5159		max	B	.129	1	-.076	2	.142	1	2.05	1	.247	1
5160		min		.043	2	-.155	1	.059	2	1.764	2	.104	2
5161	P1291	max	T	.062	1	-.097	2	.164	1	.826	1	.303	1

Envelope Plate/Shell Principal Stresses (Continued)

	Plate		Sur...	Sigma1 [ksi]	LC	Sigma2 [ksi]	LC	Tau Max [k...	LC	Angle [rad]	LC	Von Mises [ksi]	LC
5162		min		.016	2	-.267	1	.056	2	.772	2	.106	2
5163		max	B	.208	1	-.048	2	.149	1	2.246	1	.265	1
5164		min		.06	2	-.09	1	.054	2	1.977	2	.093	2
5165	P1292	max	T	.063	1	-.098	2	.162	1	.748	1	.297	1
5166		min		.018	2	-.261	1	.058	2	.66	2	.108	2
5167		max	B	.204	1	-.05	2	.146	1	2.163	1	.259	1
5168		min		.065	2	-.087	1	.057	2	1.862	2	.1	2
5169	P1293	max	T	.135	1	-.062	2	.145	1	.605	1	.251	1
5170		min		.047	2	-.154	1	.055	2	.476	2	.095	2
5171		max	B	.109	1	-.081	2	.134	1	2.011	1	.234	1
5172		min		.041	2	-.159	1	.061	2	1.693	2	.107	2
5173	P1294	max	T	.148	1	-.053	2	.134	1	.598	1	.233	1
5174		min		.055	2	-.121	1	.054	2	.437	2	.093	2
5175		max	B	.073	1	-.086	2	.118	1	1.989	1	.209	1
5176		min		.032	2	-.163	1	.059	2	1.623	2	.105	2
5177	P1295	max	T	.066	1	-.093	2	.151	1	.7	1	.274	1
5178		min		.023	2	-.235	1	.058	2	.578	2	.106	2
5179		max	B	.179	1	-.053	2	.131	1	2.103	1	.232	1
5180		min		.062	2	-.084	1	.057	2	1.757	2	.099	2
5181	P1296	max	T	.074	1	-.08	2	.134	1	.687	1	.24	1
5182		min		.029	2	-.194	1	.054	2	.524	2	.098	2
5183		max	B	.135	1	-.057	2	.109	1	2.072	1	.191	1
5184		min		.051	2	-.083	1	.054	2	1.661	2	.094	2
5185	P1297	max	T	.163	1	-.037	2	.119	1	.624	1	.211	1
5186		min		.064	2	-.075	1	.051	2	.417	2	.088	2
5187		max	B	.023	1	-.092	2	.096	1	1.994	1	.18	1
5188		min		.017	2	-.168	1	.054	2	1.555	2	.101	2
5189	P1298	max	T	.183	1	-.017	2	.103	1	.692	1	.196	1
5190		min		.073	2	-.023	1	.045	2	.418	2	.084	2
5191		max	B	-.002	2	-.099	2	.07	1	2.049	1	.161	1
5192		min		-.035	1	-.175	1	.048	2	1.487	2	.098	2
5193	P1299	max	T	.088	1	-.061	2	.115	1	.718	1	.201	1
5194		min		.037	2	-.142	1	.049	2	.499	2	.086	2
5195		max	B	.079	1	-.062	2	.082	1	2.087	1	.143	1
5196		min		.034	2	-.086	1	.048	2	1.571	2	.084	2
5197	P1300	max	T	.113	1	-.038	2	.099	1	.802	1	.173	1
5198		min		.047	2	-.086	1	.043	2	.506	2	.074	2
5199		max	B	.017	1	-.069	2	.057	1	2.192	1	.107	1
5200		min		.012	2	-.097	1	.041	2	1.481	2	.076	2
5201	P1301	max	T	.211	1	.029	1	.091	1	.809	1	.198	1
5202		min		.084	2	.006	2	.039	2	.451	2	.082	2
5203		max	B	-.025	2	-.106	2	.048	1	2.21	1	.165	1
5204		min		-.094	1	-.19	1	.041	2	1.416	2	.096	2
5205	P1302	max	T	.248	1	.075	1	.087	1	.963	1	.221	1
5206		min		.097	2	.031	2	.033	2	.52	2	.086	2
5207		max	B	-.05	2	-.116	2	.039	1	1.334	2	.194	1
5208		min		-.142	1	-.221	1	.033	2	-.598	1	.101	2
5209	P1303	max	T	.149	1	-.013	2	.091	1	.933	1	.168	1
5210		min		.059	2	-.033	1	.036	2	.554	2	.067	2
5211		max	B	-.013	2	-.077	2	.043	1	1.385	2	.11	1
5212		min		-.039	1	-.124	1	.032	2	-.678	1	.072	2
5213	P1304	max	T	.197	1	.013	2	.093	1	1.08	1	.192	1
5214		min		.074	2	.011	1	.031	2	.65	2	.069	2
5215		max	B	-.039	2	-.087	2	.049	1	1.264	2	.151	1
5216		min		-.075	1	-.174	1	.024	2	-.362	1	.076	2
5217	P1305	max	T	.295	1	.112	1	.092	1	1.12	1	.258	1
5218		min		.111	2	.056	2	.028	2	.638	2	.096	2

Envelope Plate/Shell Principal Stresses (Continued)

	Plate		Sur...	Sigma1 [ksi]	LC	Sigma2 [ksi]	LC	Tau Max [k...	LC	Angle [rad]	LC	Von Mises [ksi]	LC
5219		max	B	-.075	2	-.127	2	.051	1	1.229	2	.238	1
5220		min		-.171	1	-.272	1	.026	2	-.294	1	.11	2
5221	P1306	max	T	.348	1	.141	1	.103	1	1.251	1	.303	1
5222		min		.128	2	.078	2	.025	2	.807	2	.112	2
5223		max	B	-.1	2	-.139	2	.07	1	1.082	2	.288	1
5224		min		-.191	1	-.332	1	.02	2	-.141	1	.124	2
5225	P1307	max	T	.253	1	.047	1	.103	1	1.208	1	.233	1
5226		min		.092	2	.037	2	.028	2	.796	2	.08	2
5227		max	B	-.064	2	-.099	2	.068	1	1.084	2	.205	1
5228		min		-.099	1	-.236	1	.018	2	-.19	1	.087	2
5229	P1308	max	T	.31	1	.076	1	.117	1	1.306	1	.28	1
5230		min		.113	2	.057	2	.028	2	.964	2	.098	2
5231		max	B	-.087	2	-.115	2	.089	1	.812	2	.26	1
5232		min		-.12	1	-.298	1	.014	2	-.105	1	.104	2
5233	P1309	max	T	.401	1	.165	1	.118	1	1.352	1	.349	1
5234		min		.149	2	.098	2	.025	2	.996	2	.131	2
5235		max	B	-.122	2	-.155	2	.091	1	.878	2	.338	1
5236		min		-.208	1	-.389	1	.016	2	-.058	1	.142	2
5237	P1310	max	T	.451	1	.186	1	.133	1	1.433	1	.392	1
5238		min		.171	2	.114	2	.028	2	1.159	2	.151	2
5239		max	B	-.142	2	-.174	2	.108	1	.653	2	.383	1
5240		min		-.225	1	-.442	1	.016	2	-.002	1	.16	2
5241	P1311	max	T	.365	1	.102	1	.132	1	1.382	1	.326	1
5242		min		.136	2	.075	2	.031	2	1.115	2	.118	2
5243		max	B	-.105	2	-.135	2	.108	1	.524	2	.311	1
5244		min		-.139	1	-.356	1	.015	2	-.052	1	.123	2
5245	P1312	max	T	.415	1	.124	1	.146	1	1.445	1	.369	1
5246		min		.16	2	.089	2	.036	2	1.232	2	.139	2
5247		max	B	-.12	2	-.157	2	.125	1	.332	2	.356	1
5248		min		-.159	1	-.408	1	.019	2	-.013	1	.142	2
5249	P1313	max	T	.495	1	.204	1	.145	1	1.501	1	.431	1
5250		min		.195	2	.128	2	.033	2	1.283	2	.171	2
5251		max	B	-.16	2	-.194	2	.122	1	.475	2	.422	1
5252		min		-.243	1	-.487	1	.017	2	.043	1	.179	2
5253	P1314	max	T	.531	1	.22	1	.156	1	1.559	1	.462	1
5254		min		.218	2	.141	2	.038	2	1.376	2	.191	2
5255		max	B	-.176	2	-.214	2	.131	1	.349	2	.453	1
5256		min		-.261	1	-.523	1	.019	2	.081	1	.198	2
5257	P1315	max	T	.46	1	.144	1	.158	1	1.498	1	.407	1
5258		min		.184	2	.102	2	.041	2	1.32	2	.16	2
5259		max	B	-.133	2	-.18	2	.137	1	.22	2	.395	1
5260		min		-.178	1	-.453	1	.023	2	.019	1	.162	2
5261	P1316	max	T	.496	1	.162	1	.167	1	1.545	1	.438	1
5262		min		.207	2	.113	2	.047	2	1.388	2	.179	2
5263		max	B	-.146	2	-.201	2	.145	1	.147	2	.426	1
5264		min		-.198	1	-.488	1	.028	2	.047	1	.18	2
5265	P1317	max	T	.559	1	.235	1	.162	1	1.612	1	.486	1
5266		min		.239	2	.152	2	.043	2	1.45	2	.209	2
5267		max	B	-.191	2	-.232	2	.135	1	.259	2	.476	1
5268		min		-.279	1	-.549	1	.021	2	.113	1	.215	2
5269	P1318	max	T	.577	1	.248	1	.164	1	1.658	1	.501	1
5270		min		.257	2	.163	2	.047	2	1.5	2	.225	2
5271		max	B	-.205	2	-.248	2	.134	1	.156	2	.49	1
5272		min		-.298	1	-.565	1	.022	2	.138	1	.23	2
5273	P1319	max	T	.524	1	.178	1	.173	1	1.587	1	.462	1
5274		min		.228	2	.123	2	.052	2	1.442	2	.197	2
5275		max	B	-.158	2	-.221	2	.15	1	.092	2	.448	1

Envelope Plate/Shell Principal Stresses (Continued)

	Plate		Sur...	Sigma1 [ksi]	LC	Sigma2 [ksi]	LC	Tau Max [k...	LC	Angle [rad]	LC	Von Mises [ksi]	LC
5276		min		-.216	1	-.515	1	.031	2	.07	1	.197	2
5277	P1320	max	T	.544	1	.192	1	.176	1	1.624	1	.478	1
5278		min		.246	2	.132	2	.057	2	1.488	2	.213	2
5279		max	B	-.169	2	-.238	2	.15	1	.087	1	.463	1
5280		min		-.234	1	-.534	1	.034	2	.045	2	.212	2
5281	P1321	max	T	.585	1	.26	1	.162	1	1.698	1	.508	1
5282		min		.272	2	.172	2	.05	2	1.555	2	.238	2
5283		max	B	-.218	2	-.263	2	.128	1	.153	1	.496	1
5284		min		-.316	1	-.572	1	.022	2	.076	2	.243	2
5285	P1322	max	T	.585	1	.271	1	.157	1	1.728	1	.507	1
5286		min		.283	2	.18	2	.051	2	1.589	2	.248	2
5287		max	B	-.227	2	-.274	2	.119	1	.152	1	.496	1
5288		min		-.333	1	-.57	1	.024	2	-.04	2	.254	2
5289	P1323	max	T	.556	1	.204	1	.176	1	1.655	1	.487	1
5290		min		.26	2	.14	2	.06	2	1.527	2	.226	2
5291		max	B	-.178	2	-.252	2	.147	1	.096	1	.471	1
5292		min		-.25	1	-.544	1	.037	2	0	2	.224	2
5293	P1324	max	T	.56	1	.214	1	.173	1	1.68	1	.489	1
5294		min		.272	2	.146	2	.063	2	1.561	2	.236	2
5295		max	B	-.185	2	-.264	2	.141	1	.095	1	.474	1
5296		min		-.265	1	-.547	1	.04	2	-.045	2	.235	2
5297	P1325	max	T	.578	1	.28	1	.149	1	1.748	1	.501	1
5298		min		.291	2	.187	2	.052	2	1.631	2	.255	2
5299		max	B	-.233	2	-.284	2	.108	1	.128	1	.491	1
5300		min		-.346	1	-.562	1	.026	2	-.124	2	.262	2
5301	P1326	max	T	.567	1	.286	1	.14	1	1.755	1	.491	1
5302		min		.294	2	.191	2	.052	2	1.654	2	.258	2
5303		max	B	-.234	2	-.292	2	.1	1	.078	1	.485	1
5304		min		-.354	1	-.553	1	.029	2	-.217	2	.268	2
5305	P1327	max	T	.558	1	.222	1	.168	1	1.698	1	.486	1
5306		min		.279	2	.151	2	.064	2	1.592	2	.242	2
5307		max	B	-.189	2	-.273	2	.135	1	.08	1	.472	1
5308		min		-.275	1	-.545	1	.042	2	-.088	2	.242	2
5309	P1328	max	T	.551	1	.226	1	.163	1	1.709	1	.48	1
5310		min		.283	2	.154	2	.064	2	1.619	2	.245	2
5311		max	B	-.19	2	-.279	2	.129	1	.054	1	.468	1
5312		min		-.281	1	-.54	1	.045	2	-.126	2	.247	2
5313	P1329	max	T	.553	1	.287	1	.133	1	1.751	1	.479	1
5314		min		.293	2	.192	2	.051	2	1.677	2	.258	2
5315		max	B	-.23	2	-.297	2	.096	1	.009	1	.479	1
5316		min		-.353	1	-.545	1	.034	2	-.275	2	.27	2
5317	P1330	max	T	.539	1	.283	1	.128	1	1.74	1	.467	1
5318		min		.289	2	.19	2	.049	2	1.7	2	.254	2
5319		max	B	-.222	2	-.299	2	.098	1	-.059	1	.473	1
5320		min		-.343	1	-.539	1	.038	2	-.307	2	.269	2
5321	P1331	max	T	.541	1	.226	1	.157	1	1.714	1	.471	1
5322		min		.282	2	.155	2	.064	2	1.646	2	.245	2
5323		max	B	-.188	2	-.283	2	.126	1	.02	1	.462	1
5324		min		-.281	1	-.533	1	.047	2	-.157	2	.249	2
5325	P1332	max	T	.529	1	.222	1	.153	1	1.716	1	.46	1
5326		min		.278	2	.153	2	.062	2	1.672	2	.241	2
5327		max	B	-.183	2	-.282	2	.126	1	-.015	1	.455	1
5328		min		-.275	1	-.526	1	.049	2	-.181	2	.248	2
5329	P1333	max	T	.526	1	.274	1	.126	1	1.731	1	.456	1
5330		min		.281	2	.185	2	.048	2	1.726	2	.247	2
5331		max	B	-.212	2	-.296	2	.104	1	-.106	1	.467	1
5332		min		-.327	1	-.535	1	.042	2	-.322	2	.264	2

Envelope Plate/Shell Principal Stresses (Continued)

	Plate		Sur...	Sigma1 [ksi]	LC	Sigma2 [ksi]	LC	Tau Max [k...	LC	Angle [rad]	LC	Von Mises [ksi]	LC
5333	P1334	max	T	.511	1	.26	1	.126	1	1.758	2	.443	1
5334		min		.269	2	.178	2	.045	2	1.731	1	.237	2
5335		max	B	-.201	2	-.288	2	.111	1	-.127	1	.459	1
5336		min		-.306	1	-.528	1	.044	2	-.327	2	.256	2
5337	P1335	max	T	.514	1	.214	1	.15	1	1.72	1	.447	1
5338		min		.27	2	.149	2	.06	2	1.7	2	.234	2
5339		max	B	-.176	2	-.278	2	.127	1	-.043	1	.448	1
5340		min		-.263	1	-.517	1	.051	2	-.197	2	.244	2
5341	P1336	max	T	.498	1	.202	1	.148	1	1.731	2	.433	1
5342		min		.259	2	.144	2	.057	2	1.729	1	.224	2
5343		max	B	-.167	2	-.27	2	.13	1	-.06	1	.438	1
5344		min		-.247	1	-.506	1	.051	2	-.209	2	.236	2
5345	P1337	max	T	.494	1	.243	1	.126	1	1.801	2	.428	1
5346		min		.254	2	.169	2	.042	2	1.744	1	.224	2
5347		max	B	-.188	2	-.276	2	.115	1	-.128	1	.447	1
5348		min		-.285	1	-.516	1	.044	2	-.329	2	.244	2
5349	P1338	max	T	.473	1	.224	1	.125	1	1.856	2	.41	1
5350		min		.236	2	.159	2	.039	2	1.771	1	.208	2
5351		max	B	-.175	2	-.26	2	.116	1	-.114	1	.43	1
5352		min		-.263	1	-.496	1	.043	2	-.336	2	.229	2
5353	P1339	max	T	.478	1	.187	1	.145	1	1.771	2	.417	1
5354		min		.244	2	.136	2	.054	2	1.744	1	.212	2
5355		max	B	-.157	2	-.258	2	.131	1	-.064	1	.425	1
5356		min		-.228	1	-.49	1	.05	2	-.215	2	.225	2
5357	P1340	max	T	.453	1	.169	1	.142	1	1.812	2	.397	1
5358		min		.226	2	.128	2	.049	2	1.769	1	.196	2
5359		max	B	-.146	2	-.242	2	.13	1	-.059	1	.406	1
5360		min		-.209	1	-.468	1	.048	2	-.229	2	.211	2
5361	P1341	max	T	.447	1	.203	1	.122	1	1.929	2	.388	1
5362		min		.216	2	.146	2	.035	2	1.812	1	.191	2
5363		max	B	-.161	2	-.24	2	.113	1	-.091	1	.406	1
5364		min		-.243	1	-.469	1	.039	2	-.352	2	.212	2
5365	P1342	max	T	.416	1	.18	1	.118	1	2.025	2	.361	1
5366		min		.194	2	.133	2	.031	2	1.865	1	.172	2
5367		max	B	-.148	2	-.217	2	.105	1	-.06	1	.376	1
5368		min		-.224	1	-.434	1	.035	2	-.389	2	.192	2
5369	P1343	max	T	.425	1	.149	1	.138	1	1.867	2	.373	1
5370		min		.206	2	.117	2	.044	2	1.802	1	.179	2
5371		max	B	-.134	2	-.223	2	.126	1	-.046	1	.382	1
5372		min		-.189	1	-.44	1	.044	2	-.245	2	.195	2
5373	P1344	max	T	.391	1	.126	1	.132	1	1.936	2	.346	1
5374		min		.184	2	.105	2	.039	2	1.845	1	.16	2
5375		max	B	-.122	2	-.201	2	.118	1	-.026	1	.352	1
5376		min		-.169	1	-.405	1	.039	2	-.273	2	.176	2
5377	P1345	max	T	.381	1	.155	1	.113	1	2.154	2	.331	1
5378		min		.173	2	.117	2	.028	2	1.932	1	.153	2
5379		max	B	-.135	2	-.193	2	.092	1	-.022	1	.339	1
5380		min		-.206	1	-.391	1	.029	2	-.454	2	.171	2
5381	P1346	max	T	.342	1	.128	1	.107	1	2.309	2	.299	1
5382		min		.152	2	.099	2	.026	2	2.014	1	.134	2
5383		max	B	-.12	2	-.168	2	.076	1	.028	1	.296	1
5384		min		-.189	1	-.342	1	.024	2	-.576	2	.15	2
5385	P1347	max	T	.353	1	.102	1	.126	1	2.027	2	.315	1
5386		min		.161	2	.092	2	.034	2	1.898	1	.14	2
5387		max	B	-.11	2	-.177	2	.106	1	0	1	.315	1
5388		min		-.15	1	-.362	1	.033	2	-.32	2	.155	2
5389	P1348	max	T	.311	1	.076	2	.118	1	2.145	2	.281	1

Envelope Plate/Shell Principal Stresses (Continued)

	Plate		Sur...	Sigma1 [ksi]	LC	Sigma2 [ksi]	LC	Tau Max [k...	LC	Angle [rad]	LC	Von Mises [ksi]	LC
5390		min		.137	2	.074	1	.031	2	1.963	1	.119	2
5391		max	B	-.097	2	-.152	2	.092	1	.033	1	.273	1
5392		min		-.131	1	-.314	1	.027	2	-.403	2	.133	2
5393	P1349	max	T	.302	1	.097	1	.103	1	2.11	1	.267	1
5394		min		.133	2	.078	2	.028	2	-.673	2	.116	2
5395		max	B	-.104	2	-.145	2	.057	1	.109	1	.251	1
5396		min		-.173	1	-.288	1	.02	2	-.777	2	.129	2
5397	P1350	max	T	.264	1	.062	1	.101	1	2.219	1	.239	1
5398		min		.117	2	.055	2	.031	2	-.54	2	.102	2
5399		max	B	-.083	2	-.126	2	.039	1	2.118	2	.205	1
5400		min		-.155	1	-.233	1	.021	2	.278	1	.111	2
5401	P1351	max	T	.267	1	.058	2	.112	1	2.29	2	.248	1
5402		min		.115	2	.043	1	.029	2	2.041	1	.1	2
5403		max	B	-.084	2	-.126	2	.074	1	.082	1	.226	1
5404		min		-.112	1	-.26	1	.021	2	-.551	2	.111	2
5405	P1352	max	T	.222	1	.036	2	.107	1	2.133	1	.218	1
5406		min		.096	2	.009	1	.03	2	-.701	2	.084	2
5407		max	B	-.067	2	-.103	2	.055	1	2.343	2	.175	1
5408		min		-.093	1	-.202	1	.018	2	.17	1	.091	2
5409	P1353	max	T	.23	1	.03	2	.104	1	2.328	1	.22	1
5410		min		.103	2	.021	1	.037	2	-.448	2	.092	2
5411		max	B	-.06	2	-.112	2	.03	1	1.915	2	.166	1
5412		min		-.127	1	-.187	1	.026	2	.649	1	.097	2
5413	P1354	max	T	.201	1	.005	2	.112	1	-.393	2	.214	1
5414		min		.091	2	-.023	1	.043	2	-.718	1	.088	2
5415		max	B	-.035	2	-.101	2	.043	1	1.774	2	.142	1
5416		min		-.078	1	-.164	1	.033	2	.992	1	.089	2
5417	P1355	max	T	.181	1	.012	2	.106	1	2.235	1	.198	1
5418		min		.079	2	-.031	1	.033	2	-.577	2	.073	2
5419		max	B	-.045	2	-.085	2	.037	1	2.057	2	.126	1
5420		min		-.07	1	-.145	1	.02	2	.372	1	.074	2
5421	P1356	max	T	.144	1	-.014	2	.111	1	2.335	1	.195	1
5422		min		.064	2	-.077	1	.039	2	-.495	2	.072	2
5423		max	B	-.02	2	-.072	2	.035	1	1.841	2	.091	1
5424		min		-.033	1	-.103	1	.026	2	.754	1	.064	2
5425	P1357	max	T	.179	1	-.018	2	.124	1	-.368	2	.222	1
5426		min		.08	2	-.07	1	.049	2	-.648	1	.09	2
5427		max	B	-.011	2	-.092	2	.066	1	1.672	2	.144	1
5428		min		-.021	1	-.153	1	.041	2	1.121	1	.088	2
5429	P1358	max	T	.162	1	-.037	2	.138	1	-.368	2	.24	1
5430		min		.07	2	-.114	1	.054	2	-.607	1	.095	2
5431		max	B	.033	1	-.085	2	.09	1	1.587	2	.166	1
5432		min		.01	2	-.147	1	.048	2	1.155	1	.091	2
5433	P1359	max	T	.116	1	-.039	2	.121	1	-.455	2	.21	1
5434		min		.052	2	-.126	1	.045	2	-.727	1	.079	2
5435		max	B	.022	1	-.062	2	.053	1	1.693	2	.096	1
5436		min		.005	2	-.083	1	.034	2	1.006	1	.065	2
5437	P1360	max	T	.097	1	-.061	2	.136	1	-.451	2	.239	1
5438		min		.042	2	-.176	1	.052	2	-.679	1	.09	2
5439		max	B	.082	1	-.055	2	.079	1	1.576	2	.136	1
5440		min		.028	2	-.076	1	.041	2	1.08	1	.073	2
5441	P1361	max	T	.15	1	-.052	2	.15	1	-.387	2	.26	1
5442		min		.062	2	-.151	1	.057	2	-.594	1	.099	2
5443		max	B	.08	1	-.078	2	.112	1	1.508	2	.197	1
5444		min		.027	2	-.144	1	.052	2	1.146	1	.095	2
5445	P1362	max	T	.14	1	-.061	2	.158	1	-.423	2	.275	1
5446		min		.054	2	-.176	1	.057	2	-.604	1	.099	2

Envelope Plate/Shell Principal Stresses (Continued)

	Plate		Sur...	Sigma1 [ksi]	LC	Sigma2 [ksi]	LC	Tau Max [k...	LC	Angle [rad]	LC	Von Mises [ksi]	LC
5447		max	B	.115	1	-.072	2	.128	1	1.431	2	.222	1
5448		min		.037	2	-.142	1	.055	2	1.112	1	.096	2
5449	P1363	max	T	.085	1	-.079	2	.152	1	-.476	2	.273	1
5450		min		.034	2	-.22	1	.057	2	-.665	1	.101	2
5451		max	B	.135	1	-.049	2	.105	1	1.469	2	.184	1
5452		min		.046	2	-.074	1	.047	2	1.076	1	.082	2
5453	P1364	max	T	.079	1	-.091	2	.166	1	-.527	2	.3	1
5454		min		.028	2	-.253	1	.059	2	-.683	1	.107	2
5455		max	B	.177	1	-.044	2	.127	1	1.36	2	.225	1
5456		min		.059	2	-.077	1	.051	2	1.033	1	.089	2
5457	P1365	max	T	.132	1	-.063	2	.16	1	-.476	2	.278	1
5458		min		.047	2	-.188	1	.055	2	-.635	1	.095	2
5459		max	B	.135	1	-.066	2	.137	1	1.352	2	.237	1
5460		min		.041	2	-.139	1	.053	2	1.061	1	.093	2
5461	P1366	max	T	.122	1	-.057	2	.152	1	-.546	2	.266	1
5462		min		.04	2	-.183	1	.048	2	-.684	1	.084	2
5463		max	B	.138	1	-.06	2	.136	1	1.27	2	.235	1
5464		min		.038	2	-.133	1	.049	2	.997	1	.085	2
5465	P1367	max	T	.078	1	-.095	2	.174	1	-.605	2	.317	1
5466		min		.024	2	-.27	1	.059	2	-.728	1	.109	2
5467		max	B	.203	1	-.04	2	.142	1	1.244	2	.254	1
5468		min		.063	2	-.082	1	.052	2	.964	1	.09	2
5469	P1368	max	T	.079	1	-.091	2	.174	1	2.343	1	.316	1
5470		min		.021	2	-.269	1	.056	2	-.711	2	.103	2
5471		max	B	.211	1	-.037	2	.149	1	1.112	2	.265	1
5472		min		.061	2	-.087	1	.049	2	.874	1	.085	2
5473	P1369	max	T	.106	1	-.044	2	.131	1	-.635	2	.228	1
5474		min		.032	2	-.156	1	.038	2	-.748	1	.066	2
5475		max	B	.12	1	-.052	2	.12	1	1.196	2	.208	1
5476		min		.027	2	-.12	1	.04	2	.928	1	.07	2
5477	P1370	max	T	.053	1	-.019	2	.067	1	2.324	1	.116	1
5478		min		.017	2	-.081	1	.018	2	-.673	2	.031	2
5479		max	B	.056	1	-.042	2	.064	1	1.271	2	.111	1
5480		min		.009	2	-.072	1	.026	2	.923	1	.047	2
5481	P1371	max	T	.074	1	-.079	2	.159	1	2.291	2	.289	1
5482		min		.018	2	-.245	1	.049	2	2.246	1	.09	2
5483		max	B	.195	1	-.033	2	.14	1	.968	2	.248	1
5484		min		.05	2	-.085	1	.042	2	.767	1	.073	2
5485	P1372	max	T	.029	1	-.052	2	.098	1	2.062	2	.182	1
5486		min		.006	2	-.166	1	.029	2	2.057	1	.055	2
5487		max	B	.123	1	-.019	2	.081	1	.883	2	.146	1
5488		min		.024	2	-.039	1	.022	2	.608	1	.038	2
5489	P1373	max	T	.011	1	-.11	2	.161	1	1.254	2	.316	1
5490		min		.002	2	-.311	1	.056	2	1.254	1	.112	2
5491		max	B	.216	1	-.017	2	.119	1	-.442	1	.228	1
5492		min		.045	2	-.023	1	.031	2	-.7	2	.056	2
5493	P1374	max	T	.035	1	-.136	2	.206	1	1.033	1	.395	1
5494		min		.008	2	-.377	1	.072	2	1.016	2	.14	2
5495		max	B	.298	1	-.031	2	.177	1	2.281	2	.33	1
5496		min		.08	2	-.056	1	.056	2	-.656	1	.099	2
5497	P1375	max	T	.006	1	-.16	2	.227	1	1.29	1	.452	1
5498		min		.001	2	-.449	1	.081	2	1.282	2	.161	2
5499		max	B	.346	1	-.012	2	.181	1	-.36	1	.354	1
5500		min		.086	2	-.016	1	.049	2	-.52	2	.092	2
5501	P1376	max	T	.017	1	-.191	2	.271	1	1.08	1	.534	1
5502		min		.004	2	-.525	1	.097	2	1.06	2	.193	2
5503		max	B	.437	1	-.023	2	.237	1	-.582	1	.457	1

Envelope Plate/Shell Principal Stresses (Continued)

	Plate		Sur...	Sigma1 [ksi]	LC	Sigma2 [ksi]	LC	Tau Max [k...	LC	Angle [rad]	LC	Von Mises [ksi]	LC
5504		min		.126	2	-.037	1	.075	2	-.743	2	.139	2
5505	P1377	max	T	.02	1	-.142	2	.204	1	.916	1	.398	1
5506		min		.002	2	-.388	1	.072	2	.871	2	.143	2
5507		max	B	.315	1	-.028	2	.178	1	2.119	2	.338	1
5508		min		.092	2	-.042	1	.06	2	-.78	1	.109	2
5509	P1378	max	T	.003	1	-.141	2	.188	1	.831	1	.374	1
5510		min		-.002	2	-.372	1	.069	2	.754	2	.139	2
5511		max	B	.303	1	-.022	1	.162	1	2.262	1	.314	1
5512		min		.095	2	-.025	2	.06	2	1.966	2	.11	2
5513	P1379	max	T	-.012	2	-.198	2	.255	1	.968	1	.522	1
5514		min		-.023	1	-.533	1	.093	2	.927	2	.192	2
5515		max	B	.45	1	.003	1	.223	1	2.225	2	.448	1
5516		min		.137	2	-.011	2	.074	2	-.709	1	.143	2
5517	P1380	max	T	-.025	2	-.193	2	.224	1	.885	1	.481	1
5518		min		-.062	1	-.509	1	.084	2	.816	2	.182	2
5519		max	B	.427	1	.047	1	.19	1	2.331	1	.406	1
5520		min		.135	2	.001	2	.067	2	2.057	2	.135	2
5521	P1381	max	T	-.003	2	-.131	2	.165	1	.779	1	.334	1
5522		min		-.006	1	-.337	1	.064	2	.664	2	.13	2
5523		max	B	.267	1	-.006	1	.137	1	2.192	1	.27	1
5524		min		.089	2	-.024	2	.056	2	1.829	2	.103	2
5525	P1382	max	T	0	2	-.114	2	.14	1	.768	1	.282	1
5526		min		-.003	1	-.284	1	.057	2	.605	2	.114	2
5527		max	B	.213	1	.002	1	.106	1	2.164	1	.212	1
5528		min		.075	2	-.025	2	.05	2	1.705	2	.09	2
5529	P1383	max	T	-.032	2	-.179	2	.187	1	.836	1	.424	1
5530		min		-.086	1	-.46	1	.073	2	.729	2	.165	2
5531		max	B	.378	1	.079	1	.149	1	2.264	1	.345	1
5532		min		.124	2	.01	2	.057	2	1.899	2	.12	2
5533	P1384	max	T	-.031	2	-.155	2	.152	1	.837	1	.356	1
5534		min		-.087	1	-.391	1	.062	2	.676	2	.142	2
5535		max	B	.307	1	.093	1	.107	1	2.258	1	.273	1
5536		min		.104	2	.012	2	.046	2	1.753	2	.098	2
5537	P1385	max	T	.013	1	-.09	2	.117	1	.812	1	.228	1
5538		min		.008	2	-.221	1	.049	2	.583	2	.095	2
5539		max	B	.147	1	-.003	1	.075	1	2.212	1	.148	1
5540		min		.054	2	-.029	2	.041	2	1.588	2	.073	2
5541	P1386	max	T	.047	1	-.063	2	.103	1	.913	1	.187	1
5542		min		.02	2	-.159	1	.042	2	.604	2	.075	2
5543		max	B	.082	1	-.024	1	.053	1	1.47	2	.096	1
5544		min		.028	2	-.036	2	.032	2	-.741	1	.056	2
5545	P1387	max	T	-.022	2	-.125	2	.126	1	.899	1	.289	1
5546		min		-.063	1	-.316	1	.051	2	.666	2	.115	2
5547		max	B	.23	1	.081	1	.074	1	1.613	2	.202	1
5548		min		.076	2	.009	2	.034	2	-.778	1	.072	2
5549	P1388	max	T	-.007	2	-.092	2	.115	1	1.009	1	.237	1
5550		min		-.015	1	-.245	1	.043	2	.707	2	.089	2
5551		max	B	.164	1	.039	1	.063	1	1.457	2	.149	1
5552		min		.045	2	0	2	.022	2	-.537	1	.045	2
5553	P1389	max	T	.095	1	-.035	2	.1	1	1.045	1	.173	1
5554		min		.035	2	-.104	1	.035	2	.674	2	.061	2
5555		max	B	.033	1	-.045	2	.052	1	1.329	2	.092	1
5556		min		0	2	-.071	1	.023	2	-.443	1	.046	2
5557	P1390	max	T	.154	1	-.008	2	.106	1	1.168	1	.19	1
5558		min		.054	2	-.059	1	.031	2	.794	2	.058	2
5559		max	B	.001	1	-.058	2	.069	1	1.113	2	.137	1
5560		min		-.027	2	-.136	1	.016	2	-.248	1	.05	2

Envelope Plate/Shell Principal Stresses (Continued)

	Plate		Sur...	Sigma1 [ksi]	LC	Sigma2 [ksi]	LC	Tau Max [k...	LC	Angle [rad]	LC	Von Mises [ksi]	LC
5561	P1391	max	T	.049	1	-.061	2	.116	1	1.124	1	.212	1
5562		min		.013	2	-.184	1	.037	2	.797	2	.068	2
5563		max	B	.118	1	-.012	2	.073	1	1.208	2	.134	1
5564		min		.014	2	-.029	1	.013	2	-.325	1	.022	2
5565	P1392	max	T	.118	1	-.033	2	.125	1	1.218	1	.217	1
5566		min		.037	2	-.132	1	.035	2	.92	2	.06	2
5567		max	B	.08	1	-.031	2	.092	1	.712	2	.16	1
5568		min		-.012	2	-.104	1	.01	2	-.213	1	.027	2
5569	P1393	max	T	.216	1	.015	2	.119	1	1.264	1	.227	1
5570		min		.075	2	-.021	1	.03	2	.941	2	.069	2
5571		max	B	-.025	1	-.075	2	.089	1	.76	2	.192	1
5572		min		-.05	2	-.204	1	.012	2	-.152	1	.066	2
5573	P1394	max	T	.277	1	.034	2	.132	1	1.337	1	.271	1
5574		min		.1	2	.012	1	.033	2	1.081	2	.088	2
5575		max	B	-.051	1	-.097	2	.109	1	.43	2	.247	1
5576		min		-.067	2	-.268	1	.015	2	-.098	1	.086	2
5577	P1395	max	T	.186	1	-.009	2	.137	1	1.29	1	.242	1
5578		min		.062	2	-.087	1	.036	2	1.046	2	.067	2
5579		max	B	.046	1	-.057	2	.111	1	.334	2	.203	1
5580		min		-.029	2	-.176	1	.014	2	-.152	1	.05	2
5581	P1396	max	T	.25	1	.011	2	.149	1	1.348	1	.277	1
5582		min		.089	2	-.048	1	.039	2	1.156	2	.084	2
5583		max	B	.014	1	-.085	2	.128	1	.184	2	.248	1
5584		min		-.043	2	-.241	1	.021	2	-.111	1	.074	2
5585	P1397	max	T	.334	1	.051	2	.146	1	1.397	1	.315	1
5586		min		.125	2	.042	1	.037	2	1.195	2	.109	2
5587		max	B	-.075	1	-.122	2	.126	1	.252	2	.296	1
5588		min		-.081	2	-.327	1	.021	2	-.06	1	.108	2
5589	P1398	max	T	.385	1	.067	1	.159	1	1.447	1	.356	1
5590		min		.151	2	.065	2	.043	2	1.281	2	.131	2
5591		max	B	-.093	2	-.147	2	.14	1	.158	2	.34	1
5592		min		-.098	1	-.378	1	.027	2	-.03	1	.129	2
5593	P1399	max	T	.307	1	.028	2	.161	1	1.397	1	.315	1
5594		min		.116	2	-.014	1	.044	2	1.244	2	.105	2
5595		max	B	-.015	1	-.112	2	.142	1	.11	2	.292	1
5596		min		-.056	2	-.299	1	.028	2	-.079	1	.097	2
5597	P1400	max	T	.359	1	.042	2	.171	1	1.441	1	.351	1
5598		min		.142	2	.016	1	.05	2	1.313	2	.126	2
5599		max	B	-.042	1	-.138	2	.154	1	.067	2	.331	1
5600		min		-.067	2	-.35	1	.035	2	-.051	1	.119	2
5601	P1401	max	T	.429	1	.09	1	.17	1	1.491	1	.392	1
5602		min		.175	2	.077	2	.049	2	1.348	2	.152	2
5603		max	B	-.105	2	-.17	2	.151	1	.1	2	.376	1
5604		min		-.119	1	-.422	1	.032	2	-.004	1	.149	2
5605	P1402	max	T	.466	1	.11	1	.178	1	1.531	1	.422	1
5606		min		.197	2	.088	2	.055	2	1.401	2	.171	2
5607		max	B	-.116	2	-.191	2	.159	1	.06	2	.406	1
5608		min		-.14	1	-.458	1	.038	2	.019	1	.167	2
5609	P1403	max	T	.403	1	.054	2	.181	1	1.481	1	.384	1
5610		min		.167	2	.042	1	.056	2	1.368	2	.147	2
5611		max	B	-.066	1	-.161	2	.164	1	.038	2	.365	1
5612		min		-.078	2	-.394	1	.041	2	-.027	1	.14	2
5613	P1404	max	T	.44	1	.065	2	.188	1	1.517	1	.412	1
5614		min		.189	2	.063	1	.062	2	1.413	2	.166	2
5615		max	B	-.088	1	-.183	2	.171	1	.016	2	.393	1
5616		min		-.088	2	-.43	1	.047	2	-.006	1	.158	2
5617	P1405	max	T	.495	1	.127	1	.184	1	1.567	1	.446	1

Envelope Plate/Shell Principal Stresses (Continued)

	Plate		Sur...	Sigma1 [ksi]	LC	Sigma2 [ksi]	LC	Tau Max [k...	LC	Angle [rad]	LC	Von Mises [ksi]	LC
5618		min		.218	2	.097	2	.06	2	1.445	2	.189	2
5619		max	B	-.126	2	-.211	2	.163	1	.038	1	.429	1
5620		min		-.159	1	-.486	1	.042	2	.029	2	.184	2
5621	P1406	max	T	.517	1	.141	1	.188	1	1.598	1	.463	1
5622		min		.236	2	.105	2	.065	2	1.483	2	.204	2
5623		max	B	-.135	2	-.228	2	.165	1	.052	1	.445	1
5624		min		-.176	1	-.506	1	.046	2	.002	2	.198	2
5625	P1407	max	T	.47	1	.082	1	.194	1	1.549	1	.435	1
5626		min		.209	2	.073	2	.068	2	1.451	2	.184	2
5627		max	B	-.097	2	-.202	2	.175	1	.012	1	.416	1
5628		min		-.108	1	-.459	1	.052	2	-.001	2	.175	2
5629	P1408	max	T	.493	1	.097	1	.198	1	1.578	1	.452	1
5630		min		.227	2	.081	2	.073	2	1.485	2	.199	2
5631		max	B	-.105	2	-.218	2	.178	1	.025	1	.432	1
5632		min		-.125	1	-.481	1	.057	2	-.017	2	.189	2
5633	P1409	max	T	.531	1	.154	1	.189	1	1.625	1	.473	1
5634		min		.25	2	.111	2	.069	2	1.517	2	.217	2
5635		max	B	-.142	2	-.242	2	.164	1	.06	1	.454	1
5636		min		-.191	1	-.519	1	.05	2	-.022	2	.211	2
5637	P1410	max	T	.538	1	.163	1	.187	1	1.648	1	.478	1
5638		min		.261	2	.117	2	.072	2	1.547	2	.227	2
5639		max	B	-.148	2	-.254	2	.161	1	.06	1	.459	1
5640		min		-.204	1	-.525	1	.053	2	-.046	2	.221	2
5641	P1411	max	T	.509	1	.109	1	.2	1	1.604	1	.464	1
5642		min		.241	2	.087	2	.077	2	1.514	2	.211	2
5643		max	B	-.111	2	-.232	2	.178	1	.034	1	.443	1
5644		min		-.139	1	-.496	1	.06	2	-.03	2	.201	2
5645	P1412	max	T	.518	1	.119	1	.2	1	1.625	1	.47	1
5646		min		.252	2	.091	2	.08	2	1.542	2	.221	2
5647		max	B	-.116	2	-.243	2	.177	1	.038	1	.449	1
5648		min		-.151	1	-.505	1	.064	2	-.043	2	.211	2
5649	P1413	max	T	.539	1	.17	1	.185	1	1.666	1	.477	1
5650		min		.269	2	.12	2	.074	2	1.575	2	.233	2
5651		max	B	-.151	2	-.262	2	.157	1	.054	1	.459	1
5652		min		-.213	1	-.527	1	.055	2	-.068	2	.228	2
5653	P1414	max	T	.535	1	.173	1	.181	1	1.679	1	.473	1
5654		min		.272	2	.123	2	.075	2	1.602	2	.236	2
5655		max	B	-.153	2	-.268	2	.153	1	.041	1	.456	1
5656		min		-.218	1	-.524	1	.058	2	-.087	2	.233	2
5657	P1415	max	T	.522	1	.125	1	.198	1	1.644	1	.472	1
5658		min		.259	2	.094	2	.082	2	1.567	2	.227	2
5659		max	B	-.119	2	-.251	2	.175	1	.037	1	.45	1
5660		min		-.159	1	-.508	1	.066	2	-.055	2	.218	2
5661	P1416	max	T	.52	1	.128	1	.196	1	1.659	1	.469	1
5662		min		.263	2	.096	2	.083	2	1.592	2	.23	2
5663		max	B	-.12	2	-.256	2	.172	1	.032	1	.449	1
5664		min		-.164	1	-.508	1	.068	2	-.066	2	.222	2
5665	P1417	max	T	.527	1	.173	1	.177	1	1.69	1	.466	1
5666		min		.272	2	.123	2	.074	2	1.628	2	.236	2
5667		max	B	-.151	2	-.27	2	.15	1	.023	1	.451	1
5668		min		-.218	1	-.519	1	.059	2	-.105	2	.234	2
5669	P1418	max	T	.516	1	.17	1	.173	1	1.699	1	.456	1
5670		min		.268	2	.122	2	.073	2	1.653	2	.232	2
5671		max	B	-.148	2	-.269	2	.149	1	.005	1	.445	1
5672		min		-.214	1	-.511	1	.06	2	-.119	2	.233	2
5673	P1419	max	T	.513	1	.128	1	.193	1	1.673	1	.463	1
5674		min		.263	2	.096	2	.083	2	1.616	2	.23	2

Envelope Plate/Shell Principal Stresses (Continued)

	Plate		Sur...	Sigma1 [ksi]	LC	Sigma2 [ksi]	LC	Tau Max [k...	LC	Angle [rad]	LC	Von Mises [ksi]	LC
5675		max	B	-.119	2	-.258	2	.169	1	.025	1	.445	1
5676		min		-.164	1	-.503	1	.069	2	-.076	2	.224	2
5677	P1420	max	T	.503	1	.125	1	.189	1	1.686	1	.453	1
5678		min		.259	2	.095	2	.082	2	1.641	2	.227	2
5679		max	B	-.117	2	-.256	2	.167	1	.016	1	.438	1
5680		min		-.161	1	-.495	1	.07	2	-.083	2	.222	2
5681	P1421	max	T	.501	1	.162	1	.17	1	1.71	1	.443	1
5682		min		.26	2	.119	2	.071	2	1.681	2	.226	2
5683		max	B	-.142	2	-.264	2	.148	1	-.01	1	.436	1
5684		min		-.204	1	-.5	1	.061	2	-.129	2	.229	2
5685	P1422	max	T	.483	1	.151	1	.166	1	1.723	1	.428	1
5686		min		.249	2	.114	2	.068	2	1.71	2	.216	2
5687		max	B	-.135	2	-.255	2	.148	1	-.02	1	.425	1
5688		min		-.191	1	-.487	1	.06	2	-.14	2	.221	2
5689	P1423	max	T	.488	1	.118	1	.185	1	1.7	1	.441	1
5690		min		.251	2	.092	2	.079	2	1.665	2	.22	2
5691		max	B	-.112	2	-.251	2	.165	1	.01	1	.428	1
5692		min		-.153	1	-.484	1	.07	2	-.091	2	.218	2
5693	P1424	max	T	.469	1	.107	1	.181	1	1.717	1	.426	1
5694		min		.24	2	.088	2	.076	2	1.692	2	.21	2
5695		max	B	-.106	2	-.243	2	.163	1	.006	1	.416	1
5696		min		-.142	1	-.468	1	.068	2	-.097	2	.211	2
5697	P1425	max	T	.461	1	.137	1	.162	1	1.742	2	.41	1
5698		min		.234	2	.107	2	.063	2	1.741	1	.203	2
5699		max	B	-.127	2	-.243	2	.146	1	-.023	1	.41	1
5700		min		-.175	1	-.468	1	.058	2	-.148	2	.211	2
5701	P1426	max	T	.435	1	.12	1	.158	1	1.779	2	.39	1
5702		min		.217	2	.1	2	.059	2	1.764	1	.188	2
5703		max	B	-.118	2	-.228	2	.144	1	-.019	1	.391	1
5704		min		-.157	1	-.445	1	.055	2	-.157	2	.197	2
5705	P1427	max	T	.446	1	.094	1	.176	1	1.736	1	.408	1
5706		min		.226	2	.082	2	.072	2	1.721	2	.198	2
5707		max	B	-.099	2	-.231	2	.161	1	.007	1	.4	1
5708		min		-.128	1	-.449	1	.066	2	-.103	2	.2	2
5709	P1428	max	T	.419	1	.077	1	.171	1	1.76	1	.386	1
5710		min		.208	2	.075	2	.067	2	1.754	2	.183	2
5711		max	B	-.091	2	-.216	2	.157	1	.012	1	.381	1
5712		min		-.111	1	-.424	1	.062	2	-.109	2	.187	2
5713	P1429	max	T	.405	1	.1	1	.152	1	1.823	2	.365	1
5714		min		.197	2	.09	2	.053	2	1.795	1	.17	2
5715		max	B	-.107	2	-.209	2	.139	1	-.009	1	.367	1
5716		min		-.138	1	-.415	1	.051	2	-.17	2	.181	2
5717	P1430	max	T	.369	1	.079	2	.146	1	1.877	2	.337	1
5718		min		.174	2	.077	1	.048	2	1.831	1	.151	2
5719		max	B	-.096	2	-.188	2	.131	1	.006	1	.337	1
5720		min		-.117	1	-.38	1	.046	2	-.189	2	.163	2
5721	P1431	max	T	.387	1	.066	2	.165	1	1.792	2	.362	1
5722		min		.188	2	.056	1	.061	2	1.789	1	.165	2
5723		max	B	-.082	2	-.197	2	.151	1	.022	1	.357	1
5724		min		-.091	1	-.394	1	.058	2	-.117	2	.172	2
5725	P1432	max	T	.35	1	.055	2	.159	1	1.837	2	.335	1
5726		min		.166	2	.032	1	.055	2	1.824	1	.146	2
5727		max	B	-.07	1	-.176	2	.144	1	.036	1	.328	1
5728		min		-.072	2	-.358	1	.052	2	-.128	2	.154	2
5729	P1433	max	T	.329	1	.067	2	.139	1	1.945	2	.307	1
5730		min		.151	2	.051	1	.042	2	1.876	1	.131	2
5731		max	B	-.085	2	-.164	2	.121	1	.025	1	.301	1

Envelope Plate/Shell Principal Stresses (Continued)

	Plate		Sur...	Sigma1 [ksi]	LC	Sigma2 [ksi]	LC	Tau Max [k...	LC	Angle [rad]	LC	Von Mises [ksi]	LC
5732		min		-.096	1	-.338	1	.04	2	-.22	2	.142	2
5733	P1434	max	T	.285	1	.052	2	.132	1	2.033	2	.275	1
5734		min		.126	2	.022	1	.037	2	1.928	1	.109	2
5735		max	B	-.073	2	-.138	2	.108	1	.05	1	.26	1
5736		min		-.074	1	-.289	1	.033	2	-.271	2	.12	2
5737	P1435	max	T	.309	1	.043	2	.152	1	1.893	2	.307	1
5738		min		.142	2	.004	1	.049	2	1.864	1	.126	2
5739		max	B	-.047	1	-.153	2	.135	1	.054	1	.295	1
5740		min		-.061	2	-.316	1	.046	2	-.145	2	.133	2
5741	P1436	max	T	.263	1	.028	2	.145	1	1.962	2	.278	1
5742		min		.116	2	-.028	1	.044	2	1.909	1	.105	2
5743		max	B	-.021	1	-.127	2	.123	1	.076	1	.258	1
5744		min		-.049	2	-.268	1	.039	2	-.173	2	.111	2
5745	P1437	max	T	.237	1	.035	2	.124	1	2.145	2	.243	1
5746		min		.101	2	-.011	1	.033	2	1.991	1	.089	2
5747		max	B	-.051	1	-.111	2	.092	1	.083	1	.214	1
5748		min		-.06	2	-.235	1	.026	2	-.36	2	.097	2
5749	P1438	max	T	.187	1	.015	2	.117	1	2.28	2	.215	1
5750		min		.077	2	-.048	1	.031	2	2.066	1	.071	2
5751		max	B	-.028	1	-.084	2	.073	1	.136	1	.163	1
5752		min		-.046	2	-.175	1	.019	2	-.527	2	.073	2
5753	P1439	max	T	.212	1	.011	2	.138	1	2.05	2	.251	1
5754		min		.09	2	-.064	1	.039	2	1.962	1	.085	2
5755		max	B	.006	1	-.099	2	.11	1	.103	1	.216	1
5756		min		-.036	2	-.213	1	.032	2	-.22	2	.087	2
5757	P1440	max	T	.158	1	-.01	2	.132	1	2.157	2	.23	1
5758		min		.063	2	-.106	1	.036	2	2.022	1	.068	2
5759		max	B	.035	1	-.069	2	.094	1	.141	1	.173	1
5760		min		-.022	2	-.152	1	.024	2	-.303	2	.061	2
5761	P1441	max	T	.137	1	-.009	2	.114	1	2.153	1	.198	1
5762		min		.056	2	-.09	1	.033	2	-.726	2	.061	2
5763		max	B	-.004	1	-.06	2	.054	1	2.314	2	.111	1
5764		min		-.029	2	-.112	1	.016	2	.24	1	.052	2
5765	P1442	max	T	.092	1	-.036	2	.115	1	2.248	1	.2	1
5766		min		.038	2	-.138	1	.037	2	-.619	2	.064	2
5767		max	B	.027	1	-.042	2	.04	1	1.968	2	.071	1
5768		min		-.005	2	-.054	1	.018	2	.479	1	.039	2
5769	P1443	max	T	.101	1	-.034	2	.127	1	2.278	2	.222	1
5770		min		.038	2	-.153	1	.036	2	2.093	1	.062	2
5771		max	B	.066	1	-.039	2	.076	1	.203	1	.132	1
5772		min		-.007	2	-.086	1	.016	2	-.478	2	.036	2
5773	P1444	max	T	.045	1	-.062	2	.126	1	2.174	1	.233	1
5774		min		.014	2	-.207	1	.038	2	-.748	2	.07	2
5775		max	B	.1	1	-.011	2	.058	1	2.258	2	.109	1
5776		min		.012	2	-.017	1	.011	2	.331	1	.02	2
5777	P1445	max	T	.054	1	-.064	2	.123	1	2.334	1	.224	1
5778		min		.023	2	-.192	1	.043	2	-.555	2	.078	2
5779		max	B	.075	1	-.016	1	.046	1	1.728	2	.084	1
5780		min		.022	2	-.029	2	.026	2	.815	1	.044	2
5781	P1446	max	T	.028	1	-.09	2	.139	1	-.538	2	.265	1
5782		min		.012	2	-.25	1	.051	2	-.748	1	.097	2
5783		max	B	.139	1	0	1	.07	1	1.563	2	.14	1
5784		min		.048	2	-.021	2	.034	2	.978	1	.061	2
5785	P1447	max	T	-.005	2	-.093	2	.131	1	2.258	1	.266	1
5786		min		-.006	1	-.268	1	.044	2	-.664	2	.09	2
5787		max	B	.144	1	.043	1	.051	1	1.793	2	.128	1
5788		min		.039	2	.007	2	.016	2	.586	1	.036	2

Envelope Plate/Shell Principal Stresses (Continued)

	Plate		Sur...	Sigma1 [ksi]	LC	Sigma2 [ksi]	LC	Tau Max [k...	LC	Angle [rad]	LC	Von Mises [ksi]	LC
5789	P1448	max	T	-.02	2	-.125	2	.147	1	2.328	1	.317	1
5790		min		-.043	1	-.336	1	.053	2	-.626	2	.117	2
5791		max	B	.21	1	.077	1	.067	1	1.54	2	.184	1
5792		min		.071	2	.018	2	.027	2	.838	1	.064	2
5793	P1449	max	T	.016	1	-.113	2	.16	1	-.561	2	.312	1
5794		min		.004	2	-.304	1	.059	2	-.728	1	.115	2
5795		max	B	.203	1	0	1	.101	1	1.421	2	.203	1
5796		min		.07	2	-.016	2	.043	2	1.001	1	.079	2
5797	P1450	max	T	.015	1	-.129	2	.181	1	-.62	2	.355	1
5798		min		0	2	-.347	1	.065	2	-.747	1	.13	2
5799		max	B	.255	1	-.009	1	.132	1	1.279	2	.26	1
5800		min		.087	2	-.013	2	.05	2	.96	1	.094	2
5801	P1451	max	T	-.029	2	-.155	2	.172	1	-.637	2	.378	1
5802		min		-.061	1	-.404	1	.063	2	-.782	1	.143	2
5803		max	B	.285	1	.082	1	.101	1	1.363	2	.254	1
5804		min		.1	2	.022	2	.039	2	.922	1	.091	2
5805	P1452	max	T	-.029	2	-.178	2	.203	1	2.347	1	.437	1
5806		min		-.057	1	-.462	1	.074	2	-.691	2	.165	2
5807		max	B	.352	1	.067	1	.143	1	1.199	2	.324	1
5808		min		.123	2	.02	2	.051	2	.9	1	.114	2
5809	P1453	max	T	.025	1	-.137	2	.199	1	2.342	1	.387	1
5810		min		.002	2	-.374	1	.069	2	-.709	2	.138	2
5811		max	B	.291	1	-.014	2	.159	1	1.128	2	.305	1
5812		min		.095	2	-.026	1	.055	2	.882	1	.103	2
5813	P1454	max	T	.041	1	-.136	2	.21	1	2.315	2	.401	1
5814		min		.006	2	-.379	1	.071	2	2.262	1	.139	2
5815		max	B	.306	1	-.018	2	.177	1	.962	2	.332	1
5816		min		.095	2	-.047	1	.057	2	.78	1	.105	2
5817	P1455	max	T	-.023	2	-.19	2	.233	1	2.294	1	.484	1
5818		min		-.034	1	-.5	1	.084	2	-.779	2	.18	2
5819		max	B	.401	1	.034	1	.183	1	1.031	2	.385	1
5820		min		.137	2	.012	2	.062	2	.824	1	.131	2
5821	P1456	max	T	.003	1	-.193	2	.258	1	2.248	2	.514	1
5822		min		-.009	2	-.513	1	.092	2	2.212	1	.188	2
5823		max	B	.425	1	-.001	2	.217	1	.858	2	.429	1
5824		min		.141	2	-.009	1	.071	2	.72	1	.142	2
5825	P1457	max	T	.053	1	-.127	2	.206	1	2.169	2	.388	1
5826		min		.011	2	-.359	1	.069	2	2.153	1	.133	2
5827		max	B	.295	1	-.021	2	.178	1	.783	2	.33	1
5828		min		.087	2	-.062	1	.054	2	.657	1	.099	2
5829	P1458	max	T	.019	1	-.097	2	.148	1	1.941	1	.286	1
5830		min		.003	2	-.276	1	.05	2	1.928	2	.099	2
5831		max	B	.218	1	-.01	2	.122	1	.56	2	.232	1
5832		min		.057	2	-.025	1	.033	2	.444	1	.062	2
5833	P1459	max	T	.037	1	-.184	2	.265	1	2.11	2	.513	1
5834		min		.006	2	-.493	1	.095	2	2.103	1	.186	2
5835		max	B	.417	1	-.015	2	.231	1	.681	2	.442	1
5836		min		.135	2	-.046	1	.075	2	.595	1	.143	2
5837	P1460	max	T	.014	1	-.149	2	.207	1	1.893	1	.407	1
5838		min		.002	2	-.4	1	.075	2	1.883	2	.15	2
5839		max	B	.331	1	-.007	2	.175	1	.438	2	.341	1
5840		min		.101	2	-.02	1	.054	2	.375	1	.105	2
5841	P1461	max	T	.003	1	-.211	2	.297	1	1.301	1	.592	1
5842		min		0	2	-.591	1	.106	2	1.286	2	.211	2
5843		max	B	.486	1	-.011	2	.249	1	-.331	1	.492	1
5844		min		.133	2	-.012	1	.072	2	-.454	2	.138	2
5845	P1462	max	T	0	1	-.253	2	.345	1	1.1	1	.69	1

Envelope Plate/Shell Principal Stresses (Continued)

	Plate		Sur...	Sigma1 [ksi]	LC	Sigma2 [ksi]	LC	Tau Max [k...	LC	Angle [rad]	LC	Von Mises [ksi]	LC
5846		min		-.002	2	-.69	1	.125	2	1.077	2	.252	2
5847		max	B	.596	1	-.019	2	.308	1	-.548	1	.607	1
5848		min		.181	2	-.02	1	.1	2	-.685	2	.191	2
5849	P1463	max	T	0	2	-.256	2	.359	1	1.293	1	.718	1
5850		min		0	1	-.718	1	.128	2	1.27	2	.256	2
5851		max	B	.616	1	-.01	1	.313	1	-.331	1	.621	1
5852		min		.178	2	-.012	2	.095	2	-.443	2	.184	2
5853	P1464	max	T	-.011	2	-.314	2	.415	1	1.104	1	.843	1
5854		min		-.027	1	-.856	1	.152	2	1.076	2	.309	2
5855		max	B	.758	1	.002	1	.378	1	-.538	1	.758	1
5856		min		.238	2	-.014	2	.126	2	-.667	2	.245	2
5857	P1465	max	T	-.029	2	-.263	2	.315	1	.995	1	.67	1
5858		min		-.073	1	-.704	1	.117	2	.957	2	.249	2
5859		max	B	.611	1	.053	1	.279	1	2.289	2	.586	1
5860		min		.191	2	.006	2	.093	2	-.67	1	.188	2
5861	P1466	max	T	-.055	2	-.258	2	.266	1	.918	1	.617	1
5862		min		-.144	1	-.677	1	.102	2	.855	2	.235	2
5863		max	B	.581	1	.131	1	.225	1	2.123	2	.528	1
5864		min		.187	2	.033	2	.077	2	-.766	1	.173	2
5865	P1467	max	T	-.058	2	-.336	2	.374	1	1.016	1	.834	1
5866		min		-.151	1	-.899	1	.139	2	.978	2	.311	2
5867		max	B	.793	1	.128	1	.333	1	2.327	2	.738	1
5868		min		.253	2	.032	2	.111	2	-.644	1	.239	2
5869	P1468	max	T	-.096	2	-.339	2	.316	1	.955	1	.791	1
5870		min		-.254	1	-.887	1	.121	2	.897	2	.302	2
5871		max	B	.772	1	.244	1	.264	1	2.184	2	.683	1
5872		min		.249	2	.076	2	.086	2	-.719	1	.221	2
5873	P1469	max	T	-.068	2	-.238	2	.215	1	.879	1	.545	1
5874		min		-.182	1	-.612	1	.085	2	.779	2	.213	2
5875		max	B	.515	1	.182	1	.166	1	2.324	1	.452	1
5876		min		.168	2	.05	2	.059	2	1.964	2	.15	2
5877	P1470	max	T	-.067	2	-.206	2	.171	1	.896	1	.461	1
5878		min		-.181	1	-.524	1	.069	2	.737	2	.182	2
5879		max	B	.426	1	.195	1	.115	1	1.816	2	.369	1
5880		min		.139	2	.057	2	.041	2	-.785	1	.121	2
5881	P1471	max	T	-.116	2	-.318	2	.254	1	.924	1	.715	1
5882		min		-.309	1	-.817	1	.101	2	.828	2	.279	2
5883		max	B	.698	1	.316	1	.191	1	2.045	2	.605	1
5884		min		.226	2	.107	2	.059	2	-.746	1	.196	2
5885	P1472	max	T	-.108	2	-.272	2	.207	1	.954	1	.606	1
5886		min		-.281	1	-.695	1	.082	2	.804	2	.237	2
5887		max	B	.583	1	.301	1	.141	1	1.973	2	.505	1
5888		min		.181	2	.112	2	.035	2	-.668	1	.159	2
5889	P1473	max	T	-.054	2	-.166	2	.145	1	.974	1	.378	1
5890		min		-.138	1	-.428	1	.056	2	.747	2	.147	2
5891		max	B	.335	1	.161	1	.087	1	1.68	2	.29	1
5892		min		.101	2	.053	2	.024	2	-.624	1	.088	2
5893	P1474	max	T	-.032	2	-.126	2	.137	1	1.073	1	.313	1
5894		min		-.069	1	-.342	1	.047	2	.803	2	.114	2
5895		max	B	.264	1	.091	1	.087	1	1.5	2	.232	1
5896		min		.062	2	.041	2	.01	2	-.426	1	.055	2
5897	P1475	max	T	-.085	2	-.219	2	.179	1	1.009	1	.496	1
5898		min		-.208	1	-.566	1	.067	2	.806	2	.191	2
5899		max	B	.471	1	.23	1	.12	1	1.988	2	.408	1
5900		min		.134	2	.099	2	.017	2	-.543	1	.12	2
5901	P1476	max	T	-.052	2	-.163	2	.167	1	1.096	1	.4	1
5902		min		-.108	1	-.443	1	.055	2	.867	2	.144	2

Envelope Plate/Shell Principal Stresses (Continued)

	Plate		Sur...	Sigma1 [ksi]	LC	Sigma2 [ksi]	LC	Tau Max [k...	LC	Angle [rad]	LC	Von Mises [ksi]	LC
5903		max	B	.369	1	.127	1	.121	1	-.404	1	.325	1
5904		min		.086	2	.073	2	.006	2	-.666	2	.081	2
5905	P1477	max	T	.012	1	-.09	2	.14	1	1.163	1	.273	1
5906		min		-.005	2	-.267	1	.042	2	.897	2	.087	2
5907		max	B	.206	1	.02	2	.101	1	.581	2	.204	1
5908		min		.029	2	.005	1	.004	2	-.296	1	.026	2
5909	P1478	max	T	.091	1	-.059	2	.147	1	1.233	1	.262	1
5910		min		.023	2	-.204	1	.041	2	1.004	2	.073	2
5911		max	B	.157	1	-.014	2	.117	1	.167	2	.207	1
5912		min		.012	2	-.077	1	.013	2	-.225	1	.022	2
5913	P1479	max	T	-.012	1	-.12	2	.169	1	1.162	1	.343	1
5914		min		-.019	2	-.349	1	.051	2	.952	2	.112	2
5915		max	B	.293	1	.034	2	.132	1	-.176	2	.28	1
5916		min		.06	2	.028	1	.013	2	-.323	1	.053	2
5917	P1480	max	T	.072	1	-.084	2	.171	1	1.216	1	.312	1
5918		min		.014	2	-.27	1	.049	2	1.039	2	.092	2
5919		max	B	.227	1	-.004	2	.142	1	-.097	2	.26	1
5920		min		.039	2	-.058	1	.022	2	-.27	1	.041	2
5921	P1481	max	T	.163	1	-.033	2	.156	1	1.289	1	.27	1
5922		min		.052	2	-.15	1	.043	2	1.106	2	.074	2
5923		max	B	.112	1	-.046	2	.132	1	.084	2	.229	1
5924		min		-.004	2	-.151	1	.021	2	-.178	1	.044	2
5925	P1482	max	T	.227	1	-.011	2	.165	1	1.34	1	.292	1
5926		min		.081	2	-.102	1	.046	2	1.195	2	.087	2
5927		max	B	.072	1	-.076	2	.144	1	.046	2	.26	1
5928		min		-.018	2	-.217	1	.029	2	-.141	1	.069	2
5929	P1483	max	T	.145	1	-.054	2	.174	1	1.266	1	.303	1
5930		min		.045	2	-.203	1	.05	2	1.126	2	.086	2
5931		max	B	.169	1	-.037	2	.15	1	-.069	2	.261	1
5932		min		.021	2	-.131	1	.029	2	-.226	1	.051	2
5933	P1484	max	T	.209	1	-.03	2	.178	1	1.316	1	.31	1
5934		min		.074	2	-.147	1	.052	2	1.209	2	.093	2
5935		max	B	.12	1	-.068	2	.158	1	-.053	2	.276	1
5936		min		.004	2	-.195	1	.036	2	-.184	1	.07	2
5937	P1485	max	T	.285	1	.007	2	.173	1	1.386	1	.32	1
5938		min		.109	2	-.062	1	.051	2	1.271	2	.105	2
5939		max	B	.037	1	-.104	2	.156	1	.024	2	.294	1
5940		min		-.031	2	-.274	1	.036	2	-.108	1	.092	2
5941	P1486	max	T	.336	1	.022	2	.182	1	1.428	1	.35	1
5942		min		.135	2	-.028	1	.056	2	1.332	2	.125	2
5943		max	B	.006	1	-.13	2	.165	1	.009	2	.328	1
5944		min		-.043	2	-.325	1	.043	2	-.078	1	.114	2
5945	P1487	max	T	.265	1	-.011	2	.183	1	1.364	1	.327	1
5946		min		.102	2	-.1	1	.056	2	1.281	2	.108	2
5947		max	B	.079	1	-.096	2	.165	1	-.043	2	.299	1
5948		min		-.01	2	-.251	1	.043	2	-.145	1	.091	2
5949	P1488	max	T	.316	1	.005	2	.189	1	1.41	1	.351	1
5950		min		.128	2	-.062	1	.062	2	1.342	2	.126	2
5951		max	B	.044	1	-.121	2	.172	1	-.036	2	.325	1
5952		min		-.023	2	-.301	1	.049	2	-.11	1	.112	2
5953	P1489	max	T	.38	1	.034	2	.189	1	1.467	1	.379	1
5954		min		.159	2	0	1	.062	2	1.382	2	.145	2
5955		max	B	-.021	1	-.153	2	.173	1	-.002	2	.358	1
5956		min		-.054	2	-.368	1	.049	2	-.052	1	.134	2
5957	P1490	max	T	.417	1	.045	2	.196	1	1.503	1	.406	1
5958		min		.182	2	.025	1	.069	2	1.423	2	.164	2
5959		max	B	-.045	1	-.174	2	.18	1	-.012	2	.384	1

Envelope Plate/Shell Principal Stresses (Continued)

	Plate		Sur...	Sigma1 [ksi]	LC	Sigma2 [ksi]	LC	Tau Max [k...	LC	Angle [rad]	LC	Von Mises [ksi]	LC
5960		min		-.064	2	-.404	1	.055	2	-.029	1	.153	2
5961	P1491	max	T	.36	1	.018	2	.195	1	1.451	1	.376	1
5962		min		.153	2	-.031	1	.068	2	1.391	2	.145	2
5963		max	B	.015	1	-.145	2	.179	1	-.033	2	.351	1
5964		min		-.034	2	-.344	1	.056	2	-.079	1	.131	2
5965	P1492	max	T	.397	1	.028	2	.202	1	1.488	1	.401	1
5966		min		.175	2	-.006	1	.074	2	1.432	2	.163	2
5967		max	B	-.009	1	-.166	2	.185	1	-.032	2	.376	1
5968		min		-.043	2	-.38	1	.061	2	-.052	1	.149	2
5969	P1493	max	T	.448	1	.053	2	.202	1	1.534	1	.428	1
5970		min		.202	2	.044	1	.074	2	1.458	2	.181	2
5971		max	B	-.065	1	-.193	2	.185	1	-.011	1	.406	1
5972		min		-.072	2	-.434	1	.06	2	-.02	2	.169	2
5973	P1494	max	T	.472	1	.06	2	.206	1	1.562	1	.445	1
5974		min		.219	2	.06	1	.08	2	1.488	2	.196	2
5975		max	B	-.079	2	-.209	2	.188	1	.005	1	.422	1
5976		min		-.082	1	-.457	1	.065	2	-.027	2	.183	2
5977	P1495	max	T	.429	1	.036	2	.208	1	1.52	1	.422	1
5978		min		.195	2	.014	1	.08	2	1.465	2	.18	2
5979		max	B	-.03	1	-.184	2	.19	1	-.03	1	.397	1
5980		min		-.05	2	-.411	1	.067	2	-.032	2	.165	2
5981	P1496	max	T	.454	1	.042	2	.212	1	1.549	1	.44	1
5982		min		.212	2	.03	1	.085	2	1.493	2	.195	2
5983		max	B	-.046	1	-.2	2	.194	1	-.013	1	.413	1
5984		min		-.057	2	-.435	1	.072	2	-.033	2	.179	2
5985	P1497	max	T	.489	1	.072	1	.209	1	1.587	1	.458	1
5986		min		.233	2	.065	2	.084	2	1.515	2	.208	2
5987		max	B	-.085	2	-.223	2	.189	1	.016	1	.434	1
5988		min		-.095	1	-.474	1	.069	2	-.034	2	.195	2
5989	P1498	max	T	.501	1	.081	1	.21	1	1.608	1	.465	1
5990		min		.244	2	.069	2	.087	2	1.54	2	.217	2
5991		max	B	-.089	2	-.233	2	.189	1	.023	1	.441	1
5992		min		-.106	1	-.484	1	.072	2	-.041	2	.204	2
5993	P1499	max	T	.472	1	.047	2	.215	1	1.573	1	.453	1
5994		min		.226	2	.042	1	.09	2	1.518	2	.207	2
5995		max	B	-.059	1	-.213	2	.197	1	.001	1	.426	1
5996		min		-.062	2	-.453	1	.076	2	-.036	2	.19	2
5997	P1500	max	T	.485	1	.051	1	.217	1	1.595	1	.462	1
5998		min		.237	2	.051	2	.093	2	1.54	2	.216	2
5999		max	B	-.065	2	-.224	2	.198	1	.011	1	.434	1
6000		min		-.07	1	-.465	1	.079	2	-.038	2	.199	2
6001	P1501	max	T	.506	1	.087	1	.209	1	1.627	1	.468	1
6002		min		.251	2	.072	2	.09	2	1.563	2	.224	2
6003		max	B	-.091	2	-.241	2	.188	1	.026	1	.444	1
6004		min		-.114	1	-.49	1	.075	2	-.047	2	.211	2
6005	P1502	max	T	.505	1	.09	1	.207	1	1.644	1	.467	1
6006		min		.254	2	.073	2	.091	2	1.585	2	.227	2
6007		max	B	-.092	2	-.246	2	.186	1	.027	1	.444	1
6008		min		-.118	1	-.491	1	.077	2	-.053	2	.215	2
6009	P1503	max	T	.491	1	.057	1	.217	1	1.615	1	.465	1
6010		min		.244	2	.053	2	.096	2	1.561	2	.222	2
6011		max	B	-.068	2	-.231	2	.198	1	.018	1	.438	1
6012		min		-.077	1	-.472	1	.082	2	-.041	2	.206	2
6013	P1504	max	T	.492	1	.059	1	.216	1	1.633	1	.465	1
6014		min		.247	2	.054	2	.097	2	1.581	2	.225	2
6015		max	B	-.069	2	-.236	2	.196	1	.023	1	.439	1
6016		min		-.08	1	-.473	1	.083	2	-.043	2	.21	2

Envelope Plate/Shell Principal Stresses (Continued)

	Plate		Sur...	Sigma1 [ksi]	LC	Sigma2 [ksi]	LC	Tau Max [k...	LC	Angle [rad]	LC	Von Mises [ksi]	LC
6017	P1505	max	T	.5	1	.09	1	.205	1	1.66	1	.461	1
6018		min		.254	2	.073	2	.09	2	1.607	2	.227	2
6019		max	B	-.092	2	-.247	2	.184	1	.025	1	.44	1
6020		min		-.119	1	-.487	1	.078	2	-.058	2	.216	2
6021	P1506	max	T	.49	1	.087	1	.201	1	1.676	1	.452	1
6022		min		.25	2	.072	2	.089	2	1.627	2	.223	2
6023		max	B	-.089	2	-.245	2	.182	1	.024	1	.433	1
6024		min		-.116	1	-.479	1	.078	2	-.065	2	.215	2
6025	P1507	max	T	.487	1	.059	1	.214	1	1.65	1	.46	1
6026		min		.247	2	.054	2	.097	2	1.6	2	.225	2
6027		max	B	-.068	2	-.237	2	.195	1	.026	1	.435	1
6028		min		-.081	1	-.47	1	.084	2	-.046	2	.211	2
6029	P1508	max	T	.477	1	.056	1	.21	1	1.667	1	.452	1
6030		min		.244	2	.053	2	.095	2	1.62	2	.222	2
6031		max	B	-.066	2	-.235	2	.192	1	.029	1	.429	1
6032		min		-.079	1	-.463	1	.084	2	-.048	2	.209	2
6033	P1509	max	T	.475	1	.08	1	.197	1	1.692	1	.44	1
6034		min		.243	2	.07	2	.087	2	1.652	2	.217	2
6035		max	B	-.086	2	-.24	2	.179	1	.023	1	.423	1
6036		min		-.109	1	-.467	1	.077	2	-.066	2	.21	2
6037	P1510	max	T	.456	1	.07	1	.193	1	1.711	1	.425	1
6038		min		.232	2	.066	2	.083	2	1.677	2	.207	2
6039		max	B	-.081	2	-.231	2	.176	1	.024	1	.411	1
6040		min		-.099	1	-.451	1	.075	2	-.069	2	.203	2
6041	P1511	max	T	.462	1	.051	2	.206	1	1.685	1	.439	1
6042		min		.236	2	.05	1	.093	2	1.641	2	.215	2
6043		max	B	-.064	2	-.229	2	.189	1	.032	1	.419	1
6044		min		-.073	1	-.451	1	.083	2	-.049	2	.205	2
6045	P1512	max	T	.443	1	.047	2	.201	1	1.705	1	.424	1
6046		min		.225	2	.04	1	.089	2	1.664	2	.206	2
6047		max	B	-.059	2	-.221	2	.185	1	.038	1	.406	1
6048		min		-.064	1	-.434	1	.081	2	-.049	2	.198	2
6049	P1513	max	T	.432	1	.06	2	.187	1	1.732	1	.406	1
6050		min		.218	2	.057	1	.079	2	1.704	2	.195	2
6051		max	B	-.075	2	-.219	2	.172	1	.029	1	.394	1
6052		min		-.086	1	-.43	1	.072	2	-.071	2	.193	2
6053	P1514	max	T	.403	1	.054	2	.182	1	1.758	1	.385	1
6054		min		.201	2	.04	1	.074	2	1.734	2	.18	2
6055		max	B	-.068	2	-.204	2	.167	1	.037	1	.375	1
6056		min		-.07	1	-.405	1	.068	2	-.074	2	.18	2
6057	P1515	max	T	.418	1	.042	2	.195	1	1.729	1	.405	1
6058		min		.211	2	.027	1	.084	2	1.689	2	.194	2
6059		max	B	-.052	1	-.209	2	.181	1	.047	1	.39	1
6060		min		-.054	2	-.413	1	.078	2	-.049	2	.188	2
6061	P1516	max	T	.389	1	.036	2	.189	1	1.756	1	.384	1
6062		min		.194	2	.011	1	.079	2	1.717	2	.179	2
6063		max	B	-.036	1	-.194	2	.175	1	.059	1	.37	1
6064		min		-.047	2	-.387	1	.073	2	-.048	2	.175	2
6065	P1517	max	T	.371	1	.045	2	.176	1	1.787	1	.361	1
6066		min		.181	2	.019	1	.068	2	1.769	2	.163	2
6067		max	B	-.051	1	-.187	2	.162	1	.049	1	.351	1
6068		min		-.059	2	-.374	1	.064	2	-.077	2	.165	2
6069	P1518	max	T	.333	1	.035	2	.17	1	1.822	1	.336	1
6070		min		.158	2	-.006	1	.062	2	1.81	2	.144	2
6071		max	B	-.029	1	-.166	2	.155	1	.066	1	.325	1
6072		min		-.049	2	-.338	1	.058	2	-.081	2	.148	2
6073	P1519	max	T	.356	1	.028	2	.183	1	1.788	1	.361	1

Envelope Plate/Shell Principal Stresses (Continued)

	Plate		Sur...	Sigma1 [ksi]	LC	Sigma2 [ksi]	LC	Tau Max [k...	LC	Angle [rad]	LC	Von Mises [ksi]	LC
6074		min		.174	2	-.011	1	.073	2	1.751	2	.162	2
6075		max	B	-.017	1	-.176	2	.169	1	.075	1	.347	1
6076		min		-.039	2	-.356	1	.069	2	-.045	2	.16	2
6077	P1520	max	T	.318	1	.017	2	.177	1	1.825	1	.338	1
6078		min		.152	2	-.037	1	.067	2	1.792	2	.144	2
6079		max	B	.006	1	-.156	2	.163	1	.096	1	.322	1
6080		min		-.03	2	-.32	1	.063	2	-.042	2	.143	2
6081	P1521	max	T	.291	1	.022	2	.164	1	1.861	1	.311	1
6082		min		.134	2	-.036	1	.056	2	1.861	2	.125	2
6083		max	B	-.003	1	-.143	2	.146	1	.086	1	.295	1
6084		min		-.038	2	-.296	1	.052	2	-.087	2	.128	2
6085	P1522	max	T	.244	1	.006	2	.158	1	1.922	2	.287	1
6086		min		.108	2	-.072	1	.051	2	1.905	1	.105	2
6087		max	B	.026	1	-.117	2	.137	1	.11	1	.262	1
6088		min		-.026	2	-.248	1	.045	2	-.096	2	.106	2
6089	P1523	max	T	.275	1	.004	2	.172	1	1.867	1	.315	1
6090		min		.127	2	-.069	1	.061	2	1.842	2	.125	2
6091		max	B	.033	1	-.133	2	.155	1	.122	1	.296	1
6092		min		-.019	2	-.278	1	.057	2	-.037	2	.124	2
6093	P1524	max	T	.228	1	-.012	2	.168	1	1.913	1	.298	1
6094		min		.101	2	-.108	1	.056	2	1.903	2	.107	2
6095		max	B	.065	1	-.107	2	.148	1	.153	1	.27	1
6096		min		-.007	2	-.231	1	.05	2	-.03	2	.104	2
6097	P1525	max	T	.192	1	-.012	2	.153	1	1.996	2	.268	1
6098		min		.08	2	-.113	1	.046	2	1.952	1	.087	2
6099		max	B	.058	1	-.088	2	.126	1	.138	1	.229	1
6100		min		-.012	2	-.194	1	.038	2	-.112	2	.083	2
6101	P1526	max	T	.136	1	-.034	2	.149	1	2.084	2	.258	1
6102		min		.052	2	-.162	1	.043	2	2.004	1	.075	2
6103		max	B	.095	1	-.057	2	.114	1	.172	1	.199	1
6104		min		.002	2	-.134	1	.03	2	-.14	2	.059	2
6105	P1527	max	T	.177	1	-.032	2	.166	1	1.975	2	.288	1
6106		min		.073	2	-.155	1	.052	2	1.961	1	.093	2
6107		max	B	.103	1	-.079	2	.141	1	.187	1	.247	1
6108		min		.008	2	-.179	1	.043	2	-.021	2	.083	2
6109	P1528	max	T	.12	1	-.057	2	.165	1	2.056	2	.29	1
6110		min		.044	2	-.211	1	.05	2	2.01	1	.087	2
6111		max	B	.147	1	-.048	2	.133	1	.224	1	.232	1
6112		min		.025	2	-.119	1	.036	2	-.009	2	.064	2
6113	P1529	max	T	.073	1	-.06	2	.145	1	2.183	2	.262	1
6114		min		.023	2	-.217	1	.042	2	2.06	1	.075	2
6115		max	B	.135	1	-.024	2	.1	1	.217	1	.177	1
6116		min		.019	2	-.065	1	.021	2	-.194	2	.037	2
6117	P1530	max	T	.007	1	-.091	2	.144	1	2.286	2	.284	1
6118		min		-.005	2	-.281	1	.043	2	2.125	1	.089	2
6119		max	B	.179	1	.013	2	.084	1	.291	1	.174	1
6120		min		.035	2	.011	1	.011	2	-.328	2	.031	2
6121	P1531	max	T	.055	1	-.087	2	.166	1	2.14	2	.309	1
6122		min		.013	2	-.277	1	.05	2	2.059	1	.094	2
6123		max	B	.199	1	-.013	2	.125	1	.265	1	.229	1
6124		min		.044	2	-.051	1	.029	2	.007	2	.052	2
6125	P1532	max	T	-.018	1	-.123	2	.169	1	2.224	2	.346	1
6126		min		-.019	2	-.355	1	.052	2	2.109	1	.114	2
6127		max	B	.258	1	.028	1	.115	1	.315	1	.245	1
6128		min		.066	2	.026	2	.02	2	.04	2	.058	2
6129	P1533	max	T	-.032	2	-.128	2	.148	1	2.198	1	.33	1
6130		min		-.059	1	-.356	1	.048	2	-.766	2	.115	2

Envelope Plate/Shell Principal Stresses (Continued)

	Plate		Sur...	Sigma1 [ksi]	LC	Sigma2 [ksi]	LC	Tau Max [k...	LC	Angle [rad]	LC	Von Mises [ksi]	LC
6131		max	B	.231	1	.089	1	.071	1	1.991	2	.202	1
6132		min		.057	2	.047	2	.005	2	.44	1	.053	2
6133	P1534	max	T	-.054	2	-.168	2	.162	1	2.267	1	.394	1
6134		min		-.116	1	-.439	1	.057	2	-.713	2	.148	2
6135		max	B	.299	1	.151	1	.074	1	1.454	2	.259	1
6136		min		.096	2	.062	2	.017	2	.668	1	.084	2
6137	P1535	max	T	-.053	2	-.166	2	.173	1	2.305	2	.407	1
6138		min		-.1	1	-.447	1	.056	2	2.167	1	.147	2
6139		max	B	.326	1	.12	1	.103	1	.4	1	.286	1
6140		min		.09	2	.07	2	.01	2	.211	2	.082	2
6141	P1536	max	T	-.086	2	-.221	2	.192	1	2.23	1	.501	1
6142		min		-.184	1	-.567	1	.068	2	-.779	2	.193	2
6143		max	B	.418	1	.214	1	.102	1	.965	2	.362	1
6144		min		.131	2	.106	2	.012	2	.557	1	.12	2
6145	P1537	max	T	-.067	2	-.207	2	.189	1	2.312	1	.471	1
6146		min		-.149	1	-.528	1	.07	2	-.704	2	.183	2
6147		max	B	.386	1	.176	1	.105	1	1.281	2	.335	1
6148		min		.136	2	.067	2	.034	2	.828	1	.118	2
6149	P1538	max	T	-.067	2	-.238	2	.229	1	2.31	1	.546	1
6150		min		-.147	1	-.604	1	.086	2	-.746	2	.212	2
6151		max	B	.471	1	.159	1	.156	1	1.123	2	.415	1
6152		min		.168	2	.062	2	.053	2	.846	1	.147	2
6153	P1539	max	T	-.109	2	-.274	2	.221	1	2.26	1	.603	1
6154		min		-.245	1	-.687	1	.082	2	-.777	2	.238	2
6155		max	B	.521	1	.276	1	.123	1	1.076	2	.452	1
6156		min		.18	2	.121	2	.029	2	.698	1	.159	2
6157	P1540	max	T	-.117	2	-.319	2	.264	1	2.342	2	.7	1
6158		min		-.266	1	-.795	1	.101	2	2.27	1	.279	2
6159		max	B	.63	1	.283	1	.173	1	1.027	2	.547	1
6160		min		.228	2	.118	2	.055	2	.775	1	.197	2
6161	P1541	max	T	-.053	2	-.256	2	.273	1	2.317	2	.608	1
6162		min		-.109	1	-.655	1	.102	2	2.264	1	.234	2
6163		max	B	.535	1	.109	1	.213	1	.963	2	.49	1
6164		min		.189	2	.044	2	.073	2	.786	1	.172	2
6165	P1542	max	T	-.027	2	-.26	2	.313	1	2.212	2	.65	1
6166		min		-.043	1	-.67	1	.116	2	2.185	1	.247	2
6167		max	B	.565	1	.035	1	.265	1	.798	2	.548	1
6168		min		.198	2	.016	2	.091	2	.686	1	.19	2
6169	P1543	max	T	-.096	2	-.338	2	.319	1	2.273	2	.765	1
6170		min		-.211	1	-.849	1	.121	2	2.23	1	.302	2
6171		max	B	.701	1	.212	1	.244	1	.898	2	.622	1
6172		min		.254	2	.088	2	.083	2	.741	1	.224	2
6173	P1544	max	T	-.057	2	-.336	2	.367	1	2.188	2	.798	1
6174		min		-.114	1	-.849	1	.14	2	2.165	1	.311	2
6175		max	B	.722	1	.102	1	.31	1	.764	2	.677	1
6176		min		.261	2	.043	2	.109	2	.663	1	.243	2
6177	P1545	max	T	.021	1	-.248	2	.333	1	2.087	2	.655	1
6178		min		0	2	-.644	1	.124	2	2.08	1	.248	2
6179		max	B	.554	1	-.011	2	.294	1	.634	2	.571	1
6180		min		.191	2	-.033	1	.101	2	.565	1	.197	2
6181	P1546	max	T	.011	1	-.202	2	.27	1	1.876	1	.534	1
6182		min		.001	2	-.529	1	.102	2	1.872	2	.203	2
6183		max	B	.449	1	-.007	2	.233	1	.398	2	.458	1
6184		min		.149	2	-.017	1	.078	2	.35	1	.152	2
6185	P1547	max	T	-.001	1	-.313	2	.398	1	2.084	2	.796	1
6186		min		-.009	2	-.796	1	.152	2	2.075	1	.308	2
6187		max	B	.692	1	-.005	2	.353	1	.622	2	.699	1

Envelope Plate/Shell Principal Stresses (Continued)

	Plate		Sur...	Sigma1 [ksi]	LC	Sigma2 [ksi]	LC	Tau Max [k...	LC	Angle [rad]	LC	Von Mises [ksi]	LC
6188		min		.249	2	-.014	1	.127	2	.558	1	.251	2
6189	P1548	max	T	.009	1	-.252	2	.327	1	1.884	2	.65	1
6190		min		0	2	-.646	1	.126	2	1.882	1	.252	2
6191		max	B	.557	1	-.008	2	.287	1	.398	2	.565	1
6192		min		.194	2	-.017	1	.101	2	.352	1	.197	2
6193	P1549	max	T	-.005	2	-.281	2	.388	1	1.259	1	.781	1
6194		min		-.01	1	-.786	1	.138	2	1.233	2	.278	2
6195		max	B	.691	1	-.005	1	.348	1	-.361	1	.693	1
6196		min		.203	2	-.01	2	.107	2	-.468	2	.208	2
6197	P1550	max	T	-.03	2	-.362	2	.453	1	1.102	1	.947	1
6198		min		-.077	1	-.983	1	.166	2	1.072	2	.348	2
6199		max	B	.883	1	.04	1	.422	1	-.54	1	.864	1
6200		min		.281	2	-.004	2	.143	2	-.667	2	.283	2
6201	P1551	max	T	0	1	-.274	2	.381	1	1.217	1	.761	1
6202		min		-.005	2	-.761	1	.135	2	1.205	2	.272	2
6203		max	B	.672	1	-.005	2	.342	1	-.4	1	.678	1
6204		min		.198	2	-.011	1	.102	2	-.501	2	.2	2
6205	P1552	max	T	-.066	2	-.377	2	.439	1	1.133	1	.956	1
6206		min		-.141	1	-1.019	1	.156	2	1.116	2	.349	2
6207		max	B	.918	1	.104	1	.407	1	-.527	1	.871	1
6208		min		.298	2	.032	2	.133	2	-.688	2	.283	2
6209	P1553	max	T	-.101	2	-.417	2	.422	1	1.061	1	1.006	1
6210		min		-.268	1	-1.112	1	.158	2	1.018	2	.376	2
6211		max	B	.984	1	.241	1	.372	1	-.596	1	.889	1
6212		min		.314	2	.072	2	.121	2	-.772	2	.285	2
6213	P1554	max	T	-.169	2	-.456	2	.382	1	1.032	1	1.054	1
6214		min		-.439	1	-1.203	1	.144	2	.971	2	.4	2
6215		max	B	1.052	1	.433	1	.31	1	2.298	2	.916	1
6216		min		.333	2	.153	2	.09	2	-.618	1	.288	2
6217	P1555	max	T	-.12	2	-.519	2	.534	1	1.183	1	1.264	1
6218		min		-.326	1	-1.395	1	.2	2	1.157	2	.471	2
6219		max	B	1.202	1	.299	1	.451	1	-.421	1	1.084	1
6220		min		.35	2	.101	2	.124	2	-.498	2	.312	2
6221	P1556	max	T	-.174	2	-.703	2	.695	1	1.176	1	1.687	1
6222		min		-.487	1	-1.877	1	.264	2	1.136	2	.634	2
6223		max	B	1.689	1	.456	1	.617	1	-.418	1	1.514	1
6224		min		.537	2	.153	2	.192	2	-.484	2	.479	2
6225	P1557	max	T	-.166	2	-.44	2	.356	1	1.005	1	.999	1
6226		min		-.429	1	-1.142	1	.137	2	.926	2	.385	2
6227		max	B	.992	1	.448	1	.272	1	2.316	2	.861	1
6228		min		.31	2	.176	2	.067	2	-.606	1	.269	2
6229	P1558	max	T	-.151	2	-.381	2	.29	1	.927	1	.843	1
6230		min		-.386	1	-.967	1	.115	2	.806	2	.332	2
6231		max	B	.847	1	.407	1	.22	1	2.225	2	.733	1
6232		min		.27	2	.165	2	.053	2	-.663	1	.236	2
6233	P1559	max	T	-.25	2	-.821	2	.719	1	.862	1	1.848	1
6234		min		-.647	1	-2.085	1	.285	2	.806	2	.728	2
6235		max	B	1.907	1	.66	1	.623	1	2.299	2	1.677	1
6236		min		.652	2	.255	2	.198	2	-.739	1	.569	2
6237	P1560	max	T	-.166	2	-.429	2	.317	1	.819	1	.919	1
6238		min		-.42	1	-1.054	1	.131	2	.696	2	.375	2
6239		max	B	.952	1	.44	1	.256	1	2.168	2	.825	1
6240		min		.328	2	.179	2	.075	2	-.775	1	.284	2
6241	P1561	max	T	-.107	2	-.267	2	.218	1	1	1	.602	1
6242		min		-.252	1	-.687	1	.08	2	.817	2	.233	2
6243		max	B	.598	1	.273	1	.163	1	2.322	2	.519	1
6244		min		.178	2	.125	2	.026	2	-.544	1	.158	2

Envelope Plate/Shell Principal Stresses (Continued)

	Plate		Sur...	Sigma1 [ksi]	LC	Sigma2 [ksi]	LC	Tau Max [k...	LC	Angle [rad]	LC	Von Mises [ksi]	LC
6245	P1562	max	T	-.064	2	-.2	2	.207	1	1.076	1	.488	1
6246		min		-.124	1	-.538	1	.068	2	.89	2	.177	2
6247		max	B	.471	1	.142	1	.164	1	-.444	1	.418	1
6248		min		.129	2	.081	2	.024	2	-.53	2	.113	2
6249	P1563	max	T	-.113	2	-.308	2	.271	1	.966	1	.699	1
6250		min		-.248	1	-.789	1	.098	2	.807	2	.27	2
6251		max	B	.711	1	.267	1	.222	1	-.589	1	.622	1
6252		min		.227	2	.127	2	.05	2	-.743	2	.197	2
6253	P1564	max	T	-.062	2	-.228	2	.251	1	1.014	1	.562	1
6254		min		-.106	1	-.608	1	.083	2	.86	2	.204	2
6255		max	B	.549	1	.126	1	.212	1	-.531	1	.498	1
6256		min		.166	2	.076	2	.045	2	-.624	2	.144	2
6257	P1565	max	T	-.02	1	-.147	2	.2	1	1.124	1	.41	1
6258		min		-.025	2	-.419	1	.061	2	.956	2	.137	2
6259		max	B	.368	1	.039	2	.166	1	-.371	2	.351	1
6260		min		.093	2	.037	1	.027	2	-.39	1	.081	2
6261	P1566	max	T	.064	1	-.106	2	.193	1	1.171	1	.359	1
6262		min		.009	2	-.323	1	.057	2	1.031	2	.11	2
6263		max	B	.284	1	.002	2	.165	1	-.269	2	.31	1
6264		min		.064	2	-.046	1	.031	2	-.342	1	.063	2
6265	P1567	max	T	-.009	1	-.168	2	.23	1	1.054	1	.465	1
6266		min		-.024	2	-.469	1	.072	2	.915	2	.158	2
6267		max	B	.425	1	.037	2	.198	1	-.488	1	.411	1
6268		min		.12	2	.029	1	.041	2	-.529	2	.107	2
6269	P1568	max	T	.065	1	-.12	2	.211	1	1.101	1	.394	1
6270		min		.008	2	-.357	1	.064	2	.987	2	.125	2
6271		max	B	.324	1	.005	2	.184	1	-.427	2	.348	1
6272		min		.084	2	-.044	1	.04	2	-.438	1	.082	2
6273	P1569	max	T	.133	1	-.072	2	.188	1	1.223	1	.331	1
6274		min		.04	2	-.243	1	.056	2	1.116	2	.098	2
6275		max	B	.214	1	-.03	2	.165	1	-.195	2	.29	1
6276		min		.041	2	-.116	1	.036	2	-.293	1	.062	2
6277	P1570	max	T	.194	1	-.045	2	.186	1	1.278	1	.323	1
6278		min		.069	2	-.179	1	.057	2	1.202	2	.099	2
6279		max	B	.156	1	-.06	2	.166	1	-.14	2	.288	1
6280		min		.022	2	-.176	1	.041	2	-.241	1	.074	2
6281	P1571	max	T	.127	1	-.082	2	.197	1	1.161	1	.348	1
6282		min		.036	2	-.266	1	.059	2	1.08	2	.105	2
6283		max	B	.242	1	-.024	2	.174	1	-.321	2	.308	1
6284		min		.056	2	-.105	1	.04	2	-.378	1	.071	2
6285	P1572	max	T	.183	1	-.053	2	.189	1	1.228	1	.327	1
6286		min		.064	2	-.195	1	.059	2	1.181	2	.102	2
6287		max	B	.177	1	-.052	2	.168	1	-.229	2	.291	1
6288		min		.034	2	-.16	1	.043	2	-.312	1	.076	2
6289	P1573	max	T	.249	1	-.024	2	.188	1	1.334	1	.331	1
6290		min		.096	2	-.127	1	.06	2	1.281	2	.11	2
6291		max	B	.109	1	-.088	2	.17	1	-.102	2	.3	1
6292		min		.006	2	-.23	1	.047	2	-.192	1	.091	2
6293	P1574	max	T	.298	1	-.008	2	.192	1	1.386	1	.349	1
6294		min		.123	2	-.086	1	.065	2	1.346	2	.127	2
6295		max	B	.071	1	-.113	2	.175	1	-.075	2	.32	1
6296		min		-.006	2	-.278	1	.053	2	-.146	1	.11	2
6297	P1575	max	T	.234	1	-.032	2	.187	1	1.297	1	.327	1
6298		min		.091	2	-.14	1	.062	2	1.274	2	.111	2
6299		max	B	.126	1	-.079	2	.168	1	-.159	2	.293	1
6300		min		.018	2	-.21	1	.049	2	-.246	1	.089	2
6301	P1576	max	T	.282	1	-.016	2	.19	1	1.36	1	.341	1

Envelope Plate/Shell Principal Stresses (Continued)

	Plate		Sur...	Sigma1 [ksi]	LC	Sigma2 [ksi]	LC	Tau Max [k...	LC	Angle [rad]	LC	Von Mises [ksi]	LC
6302		min		.118	2	-.097	1	.067	2	1.349	2	.126	2
6303		max	B	.086	1	-.104	2	.171	1	-.111	2	.308	1
6304		min		.005	2	-.256	1	.055	2	-.187	1	.107	2
6305	P1577	max	T	.342	1	.005	2	.198	1	1.433	1	.371	1
6306		min		.148	2	-.053	1	.071	2	1.398	2	.145	2
6307		max	B	.041	1	-.136	2	.181	1	-.058	2	.343	1
6308		min		-.017	2	-.32	1	.06	2	-.107	1	.129	2
6309	P1578	max	T	.38	1	.015	2	.204	1	1.473	1	.395	1
6310		min		.17	2	-.028	1	.078	2	1.439	2	.163	2
6311		max	B	.016	1	-.157	2	.187	1	-.048	2	.366	1
6312		min		-.026	2	-.357	1	.066	2	-.075	1	.146	2
6313	P1579	max	T	.326	1	-.004	2	.195	1	1.415	1	.362	1
6314		min		.143	2	-.065	1	.073	2	1.406	2	.145	2
6315		max	B	.056	1	-.127	2	.177	1	-.08	2	.329	1
6316		min		-.005	2	-.298	1	.061	2	-.136	1	.125	2
6317	P1580	max	T	.364	1	.005	2	.202	1	1.46	1	.386	1
6318		min		.166	2	-.04	1	.08	2	1.448	2	.163	2
6319		max	B	.032	1	-.148	2	.183	1	-.06	2	.352	1
6320		min		-.013	2	-.335	1	.068	2	-.096	1	.142	2
6321	P1581	max	T	.412	1	.022	2	.21	1	1.508	1	.416	1
6322		min		.19	2	-.008	1	.084	2	1.472	2	.18	2
6323		max	B	-.003	1	-.175	2	.192	1	-.041	2	.386	1
6324		min		-.033	2	-.388	1	.071	2	-.048	1	.162	2
6325	P1582	max	T	.438	1	.028	2	.215	1	1.538	1	.434	1
6326		min		.207	2	.007	1	.09	2	1.499	2	.195	2
6327		max	B	-.019	1	-.191	2	.197	1	-.027	1	.404	1
6328		min		-.038	2	-.413	1	.076	2	-.037	2	.175	2
6329	P1583	max	T	.397	1	.012	2	.209	1	1.498	1	.409	1
6330		min		.186	2	-.022	1	.087	2	1.481	2	.18	2
6331		max	B	.014	1	-.167	2	.19	1	-.047	2	.374	1
6332		min		-.019	2	-.366	1	.074	2	-.063	1	.158	2
6333	P1584	max	T	.424	1	.017	2	.216	1	1.529	1	.428	1
6334		min		.203	2	-.008	1	.093	2	1.506	2	.195	2
6335		max	B	0	1	-.182	2	.196	1	-.038	1	.392	1
6336		min		-.024	2	-.392	1	.079	2	-.039	2	.172	2
6337	P1585	max	T	.458	1	.032	2	.219	1	1.563	1	.449	1
6338		min		.221	2	.019	1	.094	2	1.521	2	.207	2
6339		max	B	-.031	1	-.204	2	.2	1	-.01	1	.417	1
6340		min		-.043	2	-.432	1	.081	2	-.036	2	.187	2
6341	P1586	max	T	.471	1	.035	2	.222	1	1.585	1	.458	1
6342		min		.232	2	.027	1	.098	2	1.542	2	.216	2
6343		max	B	-.041	1	-.215	2	.202	1	.002	1	.427	1
6344		min		-.046	2	-.446	1	.084	2	-.035	2	.196	2
6345	P1587	max	T	.445	1	.021	2	.221	1	1.555	1	.444	1
6346		min		.217	2	.003	1	.098	2	1.527	2	.208	2
6347		max	B	-.011	1	-.196	2	.201	1	-.019	1	.407	1
6348		min		-.028	2	-.413	1	.084	2	-.035	2	.183	2
6349	P1588	max	T	.459	1	.023	2	.225	1	1.578	1	.454	1
6350		min		.228	2	.01	1	.102	2	1.544	2	.217	2
6351		max	B	-.02	1	-.206	2	.204	1	-.004	1	.418	1
6352		min		-.03	2	-.427	1	.088	2	-.032	2	.192	2
6353	P1589	max	T	.478	1	.037	2	.223	1	1.605	1	.463	1
6354		min		.239	2	.033	1	.101	2	1.56	2	.222	2
6355		max	B	-.047	1	-.222	2	.203	1	.012	1	.432	1
6356		min		-.048	2	-.454	1	.087	2	-.036	2	.202	2
6357	P1590	max	T	.48	1	.038	2	.222	1	1.623	1	.463	1
6358		min		.242	2	.035	1	.102	2	1.578	2	.225	2

Envelope Plate/Shell Principal Stresses (Continued)

	Plate		Sur...	Sigma1 [ksi]	LC	Sigma2 [ksi]	LC	Tau Max [k...	LC	Angle [rad]	LC	Von Mises [ksi]	LC
6359		max	B	-.049	2	-.226	2	.203	1	.02	1	.433	1
6360		min		-.051	1	-.456	1	.089	2	-.036	2	.206	2
6361	P1591	max	T	.468	1	.025	2	.226	1	1.597	1	.46	1
6362		min		.235	2	.015	1	.105	2	1.56	2	.223	2
6363		max	B	-.025	1	-.213	2	.206	1	.008	1	.424	1
6364		min		-.032	2	-.436	1	.09	2	-.031	2	.199	2
6365	P1592	max	T	.47	1	.026	2	.226	1	1.616	1	.461	1
6366		min		.238	2	.018	1	.106	2	1.575	2	.226	2
6367		max	B	-.028	1	-.217	2	.206	1	.018	1	.426	1
6368		min		-.033	2	-.439	1	.092	2	-.03	2	.202	2
6369	P1593	max	T	.475	1	.038	2	.22	1	1.641	1	.459	1
6370		min		.242	2	.035	1	.102	2	1.595	2	.225	2
6371		max	B	-.049	2	-.227	2	.201	1	.026	1	.43	1
6372		min		-.051	1	-.454	1	.089	2	-.037	2	.207	2
6373	P1594	max	T	.466	1	.037	2	.217	1	1.659	1	.45	1
6374		min		.238	2	.032	1	.1	2	1.612	2	.222	2
6375		max	B	-.047	2	-.225	2	.199	1	.033	1	.424	1
6376		min		-.049	1	-.446	1	.089	2	-.037	2	.205	2
6377	P1595	max	T	.466	1	.026	2	.224	1	1.633	1	.457	1
6378		min		.238	2	.018	1	.106	2	1.59	2	.226	2
6379		max	B	-.029	1	-.218	2	.204	1	.027	1	.424	1
6380		min		-.033	2	-.438	1	.093	2	-.03	2	.204	2
6381	P1596	max	T	.456	1	.025	2	.22	1	1.651	1	.449	1
6382		min		.234	2	.015	1	.105	2	1.605	2	.223	2
6383		max	B	-.027	1	-.216	2	.202	1	.036	1	.418	1
6384		min		-.032	2	-.43	1	.092	2	-.029	2	.202	2
6385	P1597	max	T	.451	1	.035	2	.212	1	1.678	1	.438	1
6386		min		.231	2	.027	1	.098	2	1.631	2	.215	2
6387		max	B	-.044	1	-.219	2	.195	1	.04	1	.414	1
6388		min		-.045	2	-.434	1	.087	2	-.036	2	.201	2
6389	P1598	max	T	.431	1	.032	2	.206	1	1.7	1	.422	1
6390		min		.22	2	.018	1	.094	2	1.652	2	.205	2
6391		max	B	-.036	1	-.211	2	.191	1	.05	1	.401	1
6392		min		-.041	2	-.417	1	.085	2	-.035	2	.194	2
6393	P1599	max	T	.441	1	.023	2	.215	1	1.671	1	.436	1
6394		min		.226	2	.01	1	.102	2	1.621	2	.216	2
6395		max	B	-.022	1	-.21	2	.198	1	.046	1	.408	1
6396		min		-.03	2	-.418	1	.09	2	-.027	2	.197	2
6397	P1600	max	T	.42	1	.02	2	.209	1	1.694	1	.419	1
6398		min		.215	2	.002	1	.097	2	1.639	2	.206	2
6399		max	B	-.015	1	-.202	2	.193	1	.059	1	.394	1
6400		min		-.027	2	-.401	1	.087	2	-.024	2	.19	2
6401	P1601	max	T	.406	1	.028	2	.2	1	1.725	1	.403	1
6402		min		.205	2	.005	1	.089	2	1.675	2	.193	2
6403		max	B	-.025	1	-.199	2	.186	1	.062	1	.384	1
6404		min		-.037	2	-.396	1	.081	2	-.032	2	.184	2
6405	P1602	max	T	.376	1	.022	2	.193	1	1.755	1	.382	1
6406		min		.188	2	-.011	1	.083	2	1.702	2	.178	2
6407		max	B	-.01	1	-.185	2	.18	1	.079	1	.364	1
6408		min		-.031	2	-.369	1	.077	2	-.027	2	.171	2
6409	P1603	max	T	.394	1	.017	2	.202	1	1.721	1	.399	1
6410		min		.201	2	-.009	1	.092	2	1.661	2	.193	2
6411		max	B	-.005	1	-.19	2	.187	1	.075	1	.376	1
6412		min		-.023	2	-.379	1	.084	2	-.019	2	.18	2
6413	P1604	max	T	.364	1	.011	2	.194	1	1.753	1	.376	1
6414		min		.183	2	-.024	1	.086	2	1.687	2	.178	2
6415		max	B	.008	1	-.175	2	.18	1	.096	1	.356	1

Envelope Plate/Shell Principal Stresses (Continued)

	Plate		Sur...	Sigma1 [ksi]	LC	Sigma2 [ksi]	LC	Tau Max [k...	LC	Angle [rad]	LC	Von Mises [ksi]	LC
6416		min		-.018	2	-.352	1	.079	2	-.012	2	.167	2
6417	P1605	max	T	.342	1	.014	2	.187	1	1.79	1	.359	1
6418		min		.168	2	-.032	1	.077	2	1.736	2	.162	2
6419		max	B	.008	1	-.167	2	.173	1	.1	1	.342	1
6420		min		-.023	2	-.338	1	.072	2	-.02	2	.157	2
6421	P1606	max	T	.303	1	.004	2	.181	1	1.832	1	.336	1
6422		min		.145	2	-.058	1	.071	2	1.778	2	.144	2
6423		max	B	.031	1	-.147	2	.167	1	.128	1	.319	1
6424		min		-.015	2	-.302	1	.066	2	-.009	2	.14	2
6425	P1607	max	T	.329	1	.004	2	.186	1	1.793	1	.353	1
6426		min		.163	2	-.044	1	.079	2	1.721	2	.161	2
6427		max	B	.025	1	-.158	2	.173	1	.124	1	.334	1
6428		min		-.011	2	-.321	1	.073	2	0	2	.152	2
6429	P1608	max	T	.29	1	-.005	2	.18	1	1.841	1	.33	1
6430		min		.14	2	-.07	1	.072	2	1.765	2	.142	2
6431		max	B	.047	1	-.137	2	.166	1	.16	1	.311	1
6432		min		-.003	2	-.285	1	.067	2	.019	2	.136	2
6433	P1609	max	T	.261	1	-.009	2	.177	1	1.88	1	.317	1
6434		min		.121	2	-.092	1	.065	2	1.831	2	.126	2
6435		max	B	.059	1	-.124	2	.16	1	.162	1	.296	1
6436		min		-.004	2	-.261	1	.06	2	.007	2	.122	2
6437	P1610	max	T	.215	1	-.026	2	.175	1	1.932	1	.305	1
6438		min		.094	2	-.134	1	.06	2	1.898	2	.11	2
6439		max	B	.094	1	-.098	2	.155	1	.202	1	.275	1
6440		min		.009	2	-.216	1	.053	2	.031	2	.103	2
6441	P1611	max	T	.248	1	-.017	2	.176	1	1.898	1	.313	1
6442		min		.115	2	-.104	1	.066	2	1.825	2	.124	2
6443		max	B	.075	1	-.114	2	.16	1	.206	1	.29	1
6444		min		.006	2	-.245	1	.06	2	.048	2	.118	2
6445	P1612	max	T	.203	1	-.034	2	.175	1	1.961	1	.305	1
6446		min		.088	2	-.147	1	.061	2	1.902	2	.109	2
6447		max	B	.112	1	-.089	2	.157	1	.259	1	.275	1
6448		min		.019	2	-.202	1	.054	2	.091	2	.1	2
6449	P1613	max	T	.165	1	-.047	2	.176	1	1.987	1	.304	1
6450		min		.067	2	-.186	1	.057	2	1.977	2	.099	2
6451		max	B	.137	1	-.07	2	.151	1	.247	1	.263	1
6452		min		.024	2	-.166	1	.047	2	.065	2	.085	2
6453	P1614	max	T	.11	1	-.075	2	.18	1	2.062	2	.32	1
6454		min		.038	2	-.25	1	.056	2	2.039	1	.099	2
6455		max	B	.189	1	-.039	2	.15	1	.294	1	.262	1
6456		min		.044	2	-.11	1	.041	2	.113	2	.072	2
6457	P1615	max	T	.156	1	-.057	2	.18	1	2.027	1	.312	1
6458		min		.061	2	-.203	1	.059	2	1.996	2	.102	2
6459		max	B	.158	1	-.061	2	.157	1	.319	1	.272	1
6460		min		.035	2	-.155	1	.048	2	.153	2	.085	2
6461	P1616	max	T	.106	1	-.086	2	.19	1	2.096	2	.34	1
6462		min		.034	2	-.274	1	.06	2	2.089	1	.107	2
6463		max	B	.218	1	-.032	2	.161	1	.38	1	.285	1
6464		min		.057	2	-.105	1	.044	2	.238	2	.078	2
6465	P1617	max	T	.047	1	-.109	2	.188	1	2.144	2	.354	1
6466		min		.007	2	-.328	1	.058	2	2.087	1	.113	2
6467		max	B	.253	1	-.005	2	.149	1	.339	1	.278	1
6468		min		.067	2	-.045	1	.036	2	.175	2	.07	2
6469	P1618	max	T	-.027	2	-.151	2	.197	1	2.216	2	.409	1
6470		min		-.027	1	-.421	1	.062	2	2.129	1	.14	2
6471		max	B	.329	1	.033	2	.149	1	.382	1	.314	1
6472		min		.096	2	.032	1	.032	2	.256	2	.084	2

Envelope Plate/Shell Principal Stresses (Continued)

	Plate		Sur...	Sigma1 [ksi]	LC	Sigma2 [ksi]	LC	Tau Max [k...	LC	Angle [rad]	LC	Von Mises [ksi]	LC
6473	P1619	max	T	.05	1	-.125	2	.206	1	2.186	2	.39	1
6474		min		.005	2	-.362	1	.065	2	2.141	1	.128	2
6475		max	B	.292	1	-.002	2	.17	1	.435	1	.319	1
6476		min		.084	2	-.049	1	.043	2	.338	2	.085	2
6477	P1620	max	T	-.017	1	-.174	2	.226	1	2.255	2	.462	1
6478		min		-.026	2	-.47	1	.074	2	2.182	1	.162	2
6479		max	B	.383	1	.032	2	.182	1	.479	1	.374	1
6480		min		.121	2	.019	1	.044	2	.439	2	.108	2
6481	P1621	max	T	-.066	2	-.204	2	.208	1	2.28	2	.488	1
6482		min		-.119	1	-.536	1	.069	2	2.171	1	.18	2
6483		max	B	.42	1	.129	1	.146	1	.433	1	.373	1
6484		min		.131	2	.077	2	.027	2	.383	2	.114	2
6485	P1622	max	T	-.109	2	-.272	2	.226	1	2.349	2	.601	1
6486		min		-.23	1	-.682	1	.081	2	2.234	1	.237	2
6487		max	B	.533	1	.25	1	.142	1	.667	2	.462	1
6488		min		.179	2	.127	2	.026	2	.538	1	.159	2
6489	P1623	max	T	-.064	2	-.234	2	.249	1	2.309	2	.557	1
6490		min		-.106	1	-.603	1	.085	2	2.216	1	.21	2
6491		max	B	.494	1	.108	1	.193	1	.535	2	.45	1
6492		min		.166	2	.073	2	.047	2	.518	1	.145	2
6493	P1624	max	T	-.116	2	-.315	2	.273	1	2.259	1	.692	1
6494		min		-.233	1	-.779	1	.1	2	-.782	2	.276	2
6495		max	B	.638	1	.239	1	.199	1	.654	2	.558	1
6496		min		.228	2	.127	2	.05	2	.573	1	.198	2
6497	P1625	max	T	-.154	2	-.386	2	.301	1	2.355	2	.831	1
6498		min		-.345	1	-.948	1	.116	2	2.274	1	.337	2
6499		max	B	.757	1	.373	1	.192	1	.84	2	.656	1
6500		min		.273	2	.171	2	.051	2	.67	1	.239	2
6501	P1626	max	T	-.169	2	-.442	2	.355	1	2.236	2	.961	1
6502		min		-.384	1	-1.094	1	.136	2	2.185	1	.386	2
6503		max	B	.889	1	.408	1	.24	1	.751	2	.77	1
6504		min		.319	2	.183	2	.068	2	.618	1	.277	2
6505	P1627	max	T	-.169	2	-.439	2	.332	1	-.676	2	.915	1
6506		min		-.379	1	-1.043	1	.135	2	-.76	1	.383	2
6507		max	B	.852	1	.4	1	.226	1	.916	2	.738	1
6508		min		.327	2	.184	2	.071	2	.767	1	.284	2
6509	P1628	max	T	-.255	2	-.832	2	.708	1	2.35	2	1.786	1
6510		min		-.589	1	-2.006	1	.289	2	2.311	1	.738	2
6511		max	B	1.72	1	.601	1	.559	1	.81	2	1.512	1
6512		min		.663	2	.262	2	.201	2	.739	1	.578	2
6513	P1629	max	T	-.17	2	-.457	2	.374	1	2.197	2	1	1
6514		min		-.388	1	-1.136	1	.144	2	2.158	1	.4	2
6515		max	B	.941	1	.388	1	.277	1	.774	2	.819	1
6516		min		.343	2	.164	2	.089	2	.637	1	.297	2
6517	P1630	max	T	-.099	2	-.417	2	.41	1	2.147	2	.949	1
6518		min		-.219	1	-1.039	1	.159	2	2.124	1	.378	2
6519		max	B	.881	1	.209	1	.336	1	.72	2	.798	1
6520		min		.324	2	.085	2	.12	2	.62	1	.291	2
6521	P1631	max	T	-.172	2	-.706	2	.666	1	2.021	2	1.583	1
6522		min		-.419	1	-1.75	1	.267	2	2.001	1	.638	2
6523		max	B	1.513	1	.416	1	.549	1	.452	2	1.354	1
6524		min		.56	2	.165	2	.197	2	.418	1	.498	2
6525	P1632	max	T	-.117	2	-.52	2	.509	1	2	2	1.174	1
6526		min		-.267	1	-1.285	1	.201	2	1.998	1	.472	2
6527		max	B	1.044	1	.266	1	.389	1	.457	2	.94	1
6528		min		.372	2	.112	2	.13	2	.432	1	.33	2
6529	P1633	max	T	-.026	2	-.364	2	.434	1	2.087	2	.89	1

Envelope Plate/Shell Principal Stresses (Continued)

	Plate		Sur...	Sigma1 [ksi]	LC	Sigma2 [ksi]	LC	Tau Max [k...	LC	Angle [rad]	LC	Von Mises [ksi]	LC
6530		min		-.043	1	-.911	1	.169	2	2.078	1	.351	2
6531		max	B	.792	1	.019	1	.386	1	.627	2	.782	1
6532		min		.292	2	.006	2	.143	2	.565	1	.289	2
6533	P1634	max	T	.003	1	-.281	2	.357	1	1.92	2	.712	1
6534		min		-.003	2	-.71	1	.139	2	1.916	1	.279	2
6535		max	B	.609	1	-.006	2	.311	1	.433	2	.616	1
6536		min		.217	2	-.014	1	.112	2	.388	1	.22	2
6537	P1635	max	T	-.061	2	-.38	2	.422	1	2.045	2	.893	1
6538		min		-.093	1	-.936	1	.16	2	2.045	1	.354	2
6539		max	B	.812	1	.082	1	.365	1	.649	2	.774	1
6540		min		.308	2	.045	2	.131	2	.568	1	.288	2
6541	P1636	max	T	.01	1	-.277	2	.35	1	1.946	1	.696	1
6542		min		-.003	2	-.691	1	.137	2	1.945	2	.275	2
6543		max	B	.578	1	-.002	2	.297	1	.474	2	.586	1
6544		min		.209	2	-.015	1	.106	2	.43	1	.21	2
6545	P1637	max	T	-.025	2	-.258	2	.331	1	1.241	2	.683	1
6546		min		-.04	1	-.702	1	.116	2	1.231	1	.246	2
6547		max	B	.628	1	.026	1	.301	1	-.405	1	.615	1
6548		min		.193	2	.01	2	.091	2	-.52	2	.188	2
6549	P1638	max	T	-.099	2	-.25	2	.233	1	.787	1	.589	1
6550		min		-.195	1	-.662	1	.076	2	.717	2	.218	2
6551		max	B	.719	1	.13	1	.295	1	2.301	1	.664	1
6552		min		.305	2	.041	2	.132	2	2.199	2	.286	2
6553	P1639	max	T	-.052	2	-.208	2	.226	1	1.226	2	.516	1
6554		min		-.111	1	-.563	1	.078	2	1.208	1	.187	2
6555		max	B	.53	1	.09	1	.22	1	-.442	1	.491	1
6556		min		.18	2	.03	2	.075	2	-.566	2	.167	2
6557	P1640	max	T	-.115	2	-.432	2	.446	1	.554	1	1.033	1
6558		min		-.239	1	-1.132	1	.158	2	.497	2	.387	2
6559		max	B	1.162	1	.181	1	.49	1	2.139	1	1.083	1
6560		min		.458	2	.067	2	.196	2	2.105	2	.429	2
6561	P1641	max	T	-.155	2	-.686	2	.636	1	.53	1	1.486	1
6562		min		-.362	1	-1.633	1	.265	2	.48	2	.623	2
6563		max	B	1.535	1	.409	1	.563	1	2.057	1	1.377	1
6564		min		.582	2	.181	2	.2	2	1.952	2	.516	2
6565	P1642	max	T	-.162	2	-.443	2	.348	1	.81	1	.944	1
6566		min		-.38	1	-1.075	1	.141	2	.671	2	.388	2
6567		max	B	.988	1	.401	1	.293	1	2.188	2	.86	1
6568		min		.353	2	.172	2	.091	2	-.779	1	.306	2
6569	P1643	max	T	-.102	2	-.503	2	.434	1	.535	1	1.002	1
6570		min		-.228	1	-1.096	1	.201	2	.462	2	.46	2
6571		max	B	1.002	1	.272	1	.365	1	2.068	1	.898	1
6572		min		.4	2	.127	2	.137	2	1.945	2	.354	2
6573	P1644	max	T	-.086	2	-.404	2	.404	1	.754	1	.9	1
6574		min		-.162	1	-.97	1	.159	2	.618	2	.369	2
6575		max	B	.905	1	.194	1	.355	1	2.315	1	.825	1
6576		min		.335	2	.103	2	.116	2	2.17	2	.297	2
6577	P1645	max	T	-.088	2	-.326	2	.327	1	.884	1	.754	1
6578		min		-.17	1	-.824	1	.119	2	.745	2	.292	2
6579		max	B	.761	1	.191	1	.285	1	2.323	2	.686	1
6580		min		.259	2	.101	2	.079	2	-.687	1	.226	2
6581	P1646	max	T	-.046	2	-.245	2	.293	1	.922	1	.616	1
6582		min		-.057	1	-.642	1	.099	2	.789	2	.225	2
6583		max	B	.595	1	.078	1	.259	1	-.645	1	.56	1
6584		min		.193	2	.059	2	.067	2	-.752	2	.171	2
6585	P1647	max	T	-.048	2	-.322	2	.375	1	.788	1	.778	1
6586		min		-.054	1	-.803	1	.137	2	.66	2	.301	2

Envelope Plate/Shell Principal Stresses (Continued)

	Plate		Sur...	Sigma1 [ksi]	LC	Sigma2 [ksi]	LC	Tau Max [k...	LC	Angle [rad]	LC	Von Mises [ksi]	LC
6587		max	B	.756	1	.076	1	.34	1	2.347	1	.721	1
6588		min		.271	2	.058	2	.106	2	2.219	2	.247	2
6589	P1648	max	T	.018	1	-.245	2	.327	1	.808	1	.644	1
6590		min		-.02	2	-.635	1	.113	2	.685	2	.236	2
6591		max	B	.604	1	.031	2	.3	1	2.249	2	.602	1
6592		min		.208	2	.003	1	.088	2	-.775	1	.194	2
6593	P1649	max	T	.019	1	-.179	2	.255	1	.958	1	.501	1
6594		min		-.015	2	-.491	1	.082	2	.837	2	.172	2
6595		max	B	.457	1	.029	2	.227	1	-.608	1	.456	1
6596		min		.14	2	.003	1	.056	2	-.688	2	.128	2
6597	P1650	max	T	.076	1	-.126	2	.222	1	1.01	1	.412	1
6598		min		.01	2	-.368	1	.068	2	.913	2	.132	2
6599		max	B	.344	1	.004	2	.198	1	-.555	1	.373	1
6600		min		.097	2	-.052	1	.047	2	-.591	2	.096	2
6601	P1651	max	T	.06	1	-.178	2	.272	1	.842	1	.516	1
6602		min		-.001	2	-.483	1	.088	2	.729	2	.178	2
6603		max	B	.464	1	.014	2	.251	1	2.292	2	.484	1
6604		min		.152	2	-.038	1	.069	2	-.744	1	.146	2
6605	P1652	max	T	.093	1	-.123	2	.224	1	.9	1	.41	1
6606		min		.015	2	-.355	1	.069	2	.811	2	.131	2
6607		max	B	.344	1	-.001	2	.206	1	-.69	1	.382	1
6608		min		.105	2	-.068	1	.053	2	-.767	2	.105	2
6609	P1653	max	T	.126	1	-.085	2	.198	1	1.082	1	.35	1
6610		min		.035	2	-.27	1	.06	2	1.022	2	.107	2
6611		max	B	.253	1	-.02	2	.176	1	-.462	2	.315	1
6612		min		.065	2	-.1	1	.042	2	-.483	1	.077	2
6613	P1654	max	T	.173	1	-.055	2	.184	1	1.167	1	.318	1
6614		min		.06	2	-.194	1	.057	2	1.149	2	.099	2
6615		max	B	.182	1	-.045	2	.163	1	-.327	2	.283	1
6616		min		.041	2	-.145	1	.043	2	-.398	1	.074	2
6617	P1655	max	T	.127	1	-.079	2	.189	1	.987	1	.334	1
6618		min		.033	2	-.252	1	.056	2	.944	2	.1	2
6619		max	B	.246	1	-.017	2	.172	1	-.608	1	.307	1
6620		min		.067	2	-.098	1	.042	2	-.626	2	.077	2
6621	P1656	max	T	.164	1	-.049	2	.169	1	1.11	2	.293	1
6622		min		.056	2	-.174	1	.052	2	1.095	1	.09	2
6623		max	B	.17	1	-.037	2	.151	1	-.442	2	.262	1
6624		min		.041	2	-.131	1	.039	2	-.5	1	.067	2
6625	P1657	max	T	.221	1	-.034	2	.179	1	1.264	2	.312	1
6626		min		.087	2	-.137	1	.06	2	1.254	1	.107	2
6627		max	B	.128	1	-.07	2	.159	1	-.218	2	.277	1
6628		min		.024	2	-.189	1	.047	2	-.31	1	.084	2
6629	P1658	max	T	.267	1	-.019	2	.181	1	1.353	2	.325	1
6630		min		.113	2	-.095	1	.066	2	1.333	1	.124	2
6631		max	B	.089	1	-.095	2	.161	1	-.143	2	.288	1
6632		min		.012	2	-.233	1	.053	2	-.23	1	.101	2
6633	P1659	max	T	.207	1	-.029	2	.163	1	1.26	2	.285	1
6634		min		.082	2	-.119	1	.055	2	1.209	1	.1	2
6635		max	B	.116	1	-.06	2	.142	1	-.278	2	.248	1
6636		min		.023	2	-.169	1	.042	2	-.382	1	.075	2
6637	P1660	max	T	.252	1	-.017	2	.166	1	1.366	2	.301	1
6638		min		.109	2	-.08	1	.063	2	1.309	1	.119	2
6639		max	B	.078	1	-.085	2	.144	1	-.169	2	.258	1
6640		min		.013	2	-.211	1	.049	2	-.275	1	.092	2
6641	P1661	max	T	.311	1	-.008	2	.188	1	1.416	2	.348	1
6642		min		.139	2	-.065	1	.074	2	1.398	1	.143	2
6643		max	B	.06	1	-.118	2	.167	1	-.096	2	.309	1

Envelope Plate/Shell Principal Stresses (Continued)

	Plate		Sur...	Sigma1 [ksi]	LC	Sigma2 [ksi]	LC	Tau Max [k...	LC	Angle [rad]	LC	Von Mises [ksi]	LC
6644		min		.003	2	-.275	1	.06	2	-.165	1	.12	2
6645	P1662	max	T	.35	1	0	2	.197	1	1.46	2	.374	1
6646		min		.162	2	-.043	1	.081	2	1.451	1	.163	2
6647		max	B	.038	1	-.139	2	.175	1	-.067	2	.333	1
6648		min		-.004	2	-.313	1	.068	2	-.114	1	.137	2
6649	P1663	max	T	.297	1	-.009	2	.176	1	1.434	2	.328	1
6650		min		.136	2	-.054	1	.072	2	1.388	1	.14	2
6651		max	B	.052	1	-.109	2	.152	1	-.104	2	.282	1
6652		min		.006	2	-.252	1	.057	2	-.19	1	.112	2
6653	P1664	max	T	.338	1	-.003	2	.188	1	1.478	2	.358	1
6654		min		.16	2	-.037	1	.082	2	1.448	1	.162	2
6655		max	B	.034	1	-.13	2	.163	1	-.067	2	.309	1
6656		min		0	2	-.291	1	.065	2	-.127	1	.131	2
6657	P1665	max	T	.385	1	.005	2	.206	1	1.492	1	.399	1
6658		min		.183	2	-.027	1	.089	2	1.492	2	.181	2
6659		max	B	.022	1	-.158	2	.184	1	-.049	2	.357	1
6660		min		-.009	2	-.345	1	.074	2	-.075	1	.154	2
6661	P1666	max	T	.413	1	.009	2	.214	1	1.525	1	.421	1
6662		min		.201	2	-.015	1	.096	2	1.515	2	.196	2
6663		max	B	.01	1	-.174	2	.191	1	-.038	2	.378	1
6664		min		-.013	2	-.373	1	.08	2	-.046	1	.168	2
6665	P1667	max	T	.375	1	.001	2	.199	1	1.507	2	.387	1
6666		min		.182	2	-.024	1	.09	2	1.491	1	.181	2
6667		max	B	.022	1	-.149	2	.173	1	-.045	2	.337	1
6668		min		-.003	2	-.325	1	.073	2	-.081	1	.148	2
6669	P1668	max	T	.404	1	.004	2	.21	1	1.527	2	.412	1
6670		min		.2	2	-.015	1	.098	2	1.525	1	.198	2
6671		max	B	.013	1	-.166	2	.183	1	-.033	2	.36	1
6672		min		-.006	2	-.354	1	.08	2	-.049	1	.163	2
6673	P1669	max	T	.435	1	.012	2	.22	1	1.551	1	.438	1
6674		min		.215	2	-.006	1	.101	2	1.533	2	.209	2
6675		max	B	0	1	-.187	2	.197	1	-.024	1	.395	1
6676		min		-.016	2	-.394	1	.085	2	-.032	2	.179	2
6677	P1670	max	T	.45	1	.014	2	.225	1	1.573	1	.45	1
6678		min		.225	2	0	1	.106	2	1.548	2	.219	2
6679		max	B	-.006	1	-.197	2	.202	1	-.007	1	.407	1
6680		min		-.018	2	-.41	1	.089	2	-.028	2	.189	2
6681	P1671	max	T	.428	1	.006	2	.218	1	1.55	1	.432	1
6682		min		.214	2	-.009	1	.104	2	1.542	2	.211	2
6683		max	B	.006	1	-.179	2	.191	1	-.025	1	.38	1
6684		min		-.008	2	-.377	1	.085	2	-.026	2	.175	2
6685	P1672	max	T	.444	1	.007	2	.224	1	1.571	1	.446	1
6686		min		.225	2	-.004	1	.109	2	1.553	2	.221	2
6687		max	B	.001	1	-.189	2	.197	1	-.007	1	.394	1
6688		min		-.01	2	-.393	1	.09	2	-.022	2	.185	2
6689	P1673	max	T	.459	1	.015	2	.228	1	1.592	1	.457	1
6690		min		.233	2	.004	1	.109	2	1.561	2	.225	2
6691		max	B	-.01	1	-.204	2	.205	1	.007	1	.414	1
6692		min		-.02	2	-.419	1	.092	2	-.026	2	.195	2
6693	P1674	max	T	.462	1	.016	2	.228	1	1.609	1	.459	1
6694		min		.236	2	.006	1	.11	2	1.573	2	.228	2
6695		max	B	-.013	1	-.209	2	.205	1	.018	1	.417	1
6696		min		-.02	2	-.424	1	.094	2	-.025	2	.199	2
6697	P1675	max	T	.454	1	.008	2	.228	1	1.588	1	.455	1
6698		min		.232	2	-.002	1	.112	2	1.563	2	.228	2
6699		max	B	-.002	1	-.197	2	.201	1	.007	1	.403	1
6700		min		-.011	2	-.404	1	.093	2	-.02	2	.192	2

Envelope Plate/Shell Principal Stresses (Continued)

	Plate		Sur...	Sigma1 [ksi]	LC	Sigma2 [ksi]	LC	Tau Max [k...	LC	Angle [rad]	LC	Von Mises [ksi]	LC
6701	P1676	max	T	.457	1	.009	2	.228	1	1.604	1	.457	1
6702		min		.236	2	0	1	.113	2	1.571	2	.231	2
6703		max	B	-.003	1	-.201	2	.203	1	.019	1	.407	1
6704		min		-.011	2	-.409	1	.095	2	-.019	2	.196	2
6705	P1677	max	T	.458	1	.016	2	.226	1	1.626	1	.455	1
6706		min		.236	2	.006	1	.11	2	1.585	2	.228	2
6707		max	B	-.013	1	-.209	2	.204	1	.029	1	.416	1
6708		min		-.02	2	-.422	1	.095	2	-.024	2	.2	2
6709	P1678	max	T	.448	1	.015	2	.222	1	1.644	1	.446	1
6710		min		.232	2	.004	1	.108	2	1.597	2	.224	2
6711		max	B	-.012	1	-.207	2	.202	1	.039	1	.409	1
6712		min		-.019	2	-.415	1	.094	2	-.023	2	.198	2
6713	P1679	max	T	.453	1	.009	2	.227	1	1.619	1	.453	1
6714		min		.235	2	0	1	.113	2	1.579	2	.231	2
6715		max	B	-.004	1	-.202	2	.202	1	.03	1	.406	1
6716		min		-.011	2	-.408	1	.095	2	-.019	2	.197	2
6717	P1680	max	T	.443	1	.008	2	.222	1	1.635	1	.444	1
6718		min		.231	2	-.002	1	.111	2	1.587	2	.227	2
6719		max	B	-.003	1	-.2	2	.199	1	.041	1	.4	1
6720		min		-.01	2	-.401	1	.095	2	-.019	2	.195	2
6721	P1681	max	T	.433	1	.014	2	.216	1	1.663	1	.433	1
6722		min		.224	2	0	1	.105	2	1.61	2	.217	2
6723		max	B	-.008	1	-.202	2	.197	1	.051	1	.399	1
6724		min		-.018	2	-.403	1	.092	2	-.021	2	.193	2
6725	P1682	max	T	.411	1	.012	2	.209	1	1.686	1	.415	1
6726		min		.213	2	-.007	1	.1	2	1.625	2	.207	2
6727		max	B	-.002	1	-.193	2	.192	1	.066	1	.384	1
6728		min		-.016	2	-.386	1	.089	2	-.017	2	.186	2
6729	P1683	max	T	.427	1	.007	2	.216	1	1.653	1	.429	1
6730		min		.223	2	-.004	1	.108	2	1.598	2	.219	2
6731		max	B	0	1	-.194	2	.194	1	.054	1	.388	1
6732		min		-.009	2	-.388	1	.092	2	-.017	2	.19	2
6733	P1684	max	T	.404	1	.006	2	.207	1	1.675	1	.409	1
6734		min		.211	2	-.01	1	.103	2	1.61	2	.208	2
6735		max	B	.004	1	-.185	2	.187	1	.071	1	.373	1
6736		min		-.008	2	-.371	1	.089	2	-.013	2	.182	2
6737	P1685	max	T	.384	1	.009	2	.2	1	1.714	1	.393	1
6738		min		.198	2	-.016	1	.095	2	1.644	2	.194	2
6739		max	B	.006	1	-.181	2	.185	1	.086	1	.366	1
6740		min		-.013	2	-.363	1	.084	2	-.011	2	.175	2
6741	P1686	max	T	.353	1	.004	2	.191	1	1.75	1	.368	1
6742		min		.18	2	-.029	1	.088	2	1.669	2	.177	2
6743		max	B	.017	1	-.167	2	.177	1	.112	1	.345	1
6744		min		-.009	2	-.336	1	.079	2	0	2	.162	2
6745	P1687	max	T	.376	1	.004	2	.196	1	1.703	1	.385	1
6746		min		.196	2	-.017	1	.096	2	1.625	2	.194	2
6747		max	B	.011	1	-.173	2	.179	1	.093	1	.353	1
6748		min		-.006	2	-.347	1	.084	2	-.007	2	.171	2
6749	P1688	max	T	.343	1	0	2	.185	1	1.74	1	.357	1
6750		min		.177	2	-.027	1	.088	2	1.647	2	.177	2
6751		max	B	.019	1	-.158	2	.169	1	.123	1	.329	1
6752		min		-.003	2	-.319	1	.078	2	.004	2	.157	2
6753	P1689	max	T	.316	1	-.001	2	.182	1	1.794	1	.342	1
6754		min		.158	2	-.047	1	.08	2	1.703	2	.159	2
6755		max	B	.033	1	-.149	2	.168	1	.147	1	.321	1
6756		min		-.003	2	-.304	1	.073	2	.015	2	.147	2
6757	P1690	max	T	.277	1	-.009	2	.174	1	1.851	1	.318	1

Envelope Plate/Shell Principal Stresses (Continued)

	Plate		Sur...	Sigma1 [ksi]	LC	Sigma2 [ksi]	LC	Tau Max [k...	LC	Angle [rad]	LC	Von Mises [ksi]	LC
6758		min		.135	2	-.071	1	.072	2	1.75	2	.14	2
6759		max	B	.053	1	-.128	2	.16	1	.193	1	.298	1
6760		min		.003	2	-.268	1	.066	2	.041	2	.13	2
6761	P1691	max	T	.305	1	-.004	2	.173	1	1.789	1	.327	1
6762		min		.155	2	-.041	1	.079	2	1.678	2	.157	2
6763		max	B	.032	1	-.14	2	.159	1	.164	1	.304	1
6764		min		0	2	-.287	1	.07	2	.023	2	.14	2
6765	P1692	max	T	.263	1	-.009	2	.162	1	1.855	1	.299	1
6766		min		.13	2	-.061	1	.07	2	1.726	2	.135	2
6767		max	B	.049	1	-.119	2	.149	1	.222	1	.278	1
6768		min		.006	2	-.25	1	.062	2	.056	2	.122	2
6769	P1693	max	T	.235	1	-.02	2	.169	1	1.92	1	.3	1
6770		min		.109	2	-.103	1	.065	2	1.817	2	.12	2
6771		max	B	.08	1	-.105	2	.154	1	.252	1	.278	1
6772		min		.012	2	-.229	1	.058	2	.083	2	.111	2
6773	P1694	max	T	.192	1	-.036	2	.169	1	1.999	1	.294	1
6774		min		.082	2	-.147	1	.059	2	1.911	2	.105	2
6775		max	B	.117	1	-.08	2	.152	1	.324	1	.266	1
6776		min		.024	2	-.188	1	.052	2	.149	2	.094	2
6777	P1695	max	T	.221	1	-.018	2	.156	1	1.94	1	.277	1
6778		min		.103	2	-.09	1	.061	2	1.801	2	.113	2
6779		max	B	.073	1	-.095	2	.142	1	.299	1	.256	1
6780		min		.012	2	-.212	1	.054	2	.11	2	.102	2
6781	P1696	max	T	.18	1	-.031	2	.156	1	2.042	1	.271	1
6782		min		.076	2	-.132	1	.054	2	1.916	2	.095	2
6783		max	B	.108	1	-.07	2	.141	1	.395	1	.246	1
6784		min		.022	2	-.174	1	.046	2	.204	2	.083	2
6785	P1697	max	T	.149	1	-.058	2	.177	1	2.081	1	.308	1
6786		min		.056	2	-.205	1	.057	2	2.03	2	.099	2
6787		max	B	.166	1	-.053	2	.156	1	.404	1	.27	1
6788		min		.04	2	-.146	1	.046	2	.247	2	.081	2
6789	P1698	max	T	.107	1	-.09	2	.194	1	2.158	1	.347	1
6790		min		.031	2	-.281	1	.06	2	2.155	2	.109	2
6791		max	B	.23	1	-.027	2	.167	1	.482	1	.296	1
6792		min		.063	2	-.104	1	.045	2	.376	2	.08	2
6793	P1699	max	T	.142	1	-.053	2	.166	1	2.149	1	.289	1
6794		min		.05	2	-.19	1	.051	2	2.074	2	.089	2
6795		max	B	.158	1	-.045	2	.148	1	.501	1	.257	1
6796		min		.038	2	-.138	1	.041	2	.352	2	.072	2
6797	P1700	max	T	.109	1	-.085	2	.189	1	2.244	1	.337	1
6798		min		.029	2	-.269	1	.057	2	2.24	2	.102	2
6799		max	B	.226	1	-.023	2	.167	1	.6	1	.295	1
6800		min		.063	2	-.107	1	.043	2	.537	2	.077	2
6801	P1701	max	T	.062	1	-.132	2	.219	1	2.261	2	.411	1
6802		min		.007	2	-.376	1	.07	2	2.219	1	.136	2
6803		max	B	.313	1	-.002	2	.187	1	.549	1	.347	1
6804		min		.095	2	-.061	1	.048	2	.51	2	.096	2
6805	P1702	max	T	.01	1	-.186	2	.252	1	2.333	2	.499	1
6806		min		-.018	2	-.494	1	.084	2	2.262	1	.177	2
6807		max	B	.415	1	.024	2	.212	1	.616	2	.42	1
6808		min		.138	2	-.01	1	.057	2	.597	1	.127	2
6809	P1703	max	T	.079	1	-.13	2	.224	1	2.317	1	.414	1
6810		min		.011	2	-.368	1	.07	2	-.776	2	.136	2
6811		max	B	.314	1	-.006	2	.197	1	.695	2	.36	1
6812		min		.099	2	-.079	1	.052	2	.678	1	.102	2
6813	P1704	max	T	.048	1	-.186	2	.269	1	-.7	2	.516	1
6814		min		-.005	2	-.491	1	.091	2	-.778	1	.184	2

Envelope Plate/Shell Principal Stresses (Continued)

	Plate		Sur...	Sigma1 [ksi]	LC	Sigma2 [ksi]	LC	Tau Max [k...	LC	Angle [rad]	LC	Von Mises [ksi]	LC
6815		max	B	.423	1	.01	2	.237	1	.793	2	.45	1
6816		min		.147	2	-.05	1	.068	2	.729	1	.142	2
6817	P1705	max	T	-.05	2	-.252	2	.288	1	2.292	1	.609	1
6818		min		-.061	1	-.638	1	.101	2	-.763	2	.231	2
6819		max	B	.539	1	.059	1	.24	1	.689	2	.513	1
6820		min		.192	2	.055	2	.068	2	.631	1	.171	2
6821	P1706	max	T	-.093	2	-.334	2	.323	1	2.327	1	.743	1
6822		min		-.166	1	-.812	1	.121	2	-.72	2	.299	2
6823		max	B	.688	1	.162	1	.263	1	.759	2	.623	1
6824		min		.258	2	.099	2	.08	2	.669	1	.225	2
6825	P1707	max	T	.008	1	-.254	2	.321	1	-.66	2	.638	1
6826		min		-.024	2	-.634	1	.115	2	-.75	1	.243	2
6827		max	B	.55	1	.027	2	.282	1	.846	2	.557	1
6828		min		.204	2	-.013	1	.088	2	.759	1	.192	2
6829	P1708	max	T	-.053	2	-.332	2	.365	1	-.636	2	.763	1
6830		min		-.061	1	-.792	1	.14	2	-.732	1	.309	2
6831		max	B	.688	1	.054	2	.318	1	.878	2	.664	1
6832		min		.268	2	.051	1	.107	2	.777	1	.246	2
6833	P1709	max	T	-.167	2	-.454	2	.351	1	-.646	2	.933	1
6834		min		-.357	1	-1.059	1	.143	2	-.743	1	.397	2
6835		max	B	.888	1	.355	1	.267	1	.894	2	.775	1
6836		min		.352	2	.173	2	.09	2	.76	1	.305	2
6837	P1710	max	T	-.165	2	-.702	2	.628	1	-.464	2	1.463	1
6838		min		-.349	1	-1.606	1	.269	2	-.508	1	.636	2
6839		max	B	1.386	1	.367	1	.509	1	1.163	2	1.244	1
6840		min		.58	2	.178	2	.201	2	1.079	1	.515	2
6841	P1711	max	T	-.093	2	-.414	2	.394	1	-.595	2	.881	1
6842		min		-.164	1	-.952	1	.161	2	-.698	1	.377	2
6843		max	B	.819	1	.158	1	.331	1	.926	2	.753	1
6844		min		.334	2	.099	2	.118	2	.806	1	.297	2
6845	P1712	max	T	-.11	2	-.516	2	.445	1	-.446	2	1.014	1
6846		min		-.215	1	-1.104	1	.203	2	-.511	1	.471	2
6847		max	B	.887	1	.231	1	.328	1	1.166	2	.797	1
6848		min		.394	2	.123	2	.136	2	1.052	1	.35	2
6849	P1713	max	T	-.094	2	-.258	2	.223	1	-.718	2	.549	1
6850		min		-.167	1	-.614	1	.082	2	-.778	1	.226	2
6851		max	B	.683	1	.103	1	.29	1	.938	2	.638	1
6852		min		.304	2	.05	2	.127	2	.869	1	.283	2
6853	P1714	max	T	-.024	2	-.261	2	.303	1	1.919	1	.624	1
6854		min		-.036	1	-.641	1	.118	2	1.908	2	.25	2
6855		max	B	.54	1	.02	1	.26	1	.498	2	.531	1
6856		min		.201	2	.012	2	.095	2	.444	1	.195	2
6857	P1715	max	T	-.112	2	-.44	2	.413	1	-.506	2	.958	1
6858		min		-.225	1	-1.051	1	.164	2	-.546	1	.396	2
6859		max	B	1.09	1	.16	1	.465	1	1.039	2	1.02	1
6860		min		.464	2	.072	2	.196	2	1.013	1	.432	2
6861	P1716	max	T	-.052	2	-.212	2	.206	1	1.933	1	.474	1
6862		min		-.107	1	-.518	1	.08	2	1.922	2	.191	2
6863		max	B	.469	1	.077	1	.196	1	.55	2	.435	1
6864		min		.184	2	.032	2	.076	2	.489	1	.17	2
6865	P1717	max	T	-.044	2	-.144	2	.146	1	1.005	2	.35	1
6866		min		-.096	1	-.388	1	.05	2	1.002	1	.128	2
6867		max	B	.384	1	.07	1	.157	1	-.624	1	.354	1
6868		min		.141	2	.018	2	.062	2	-.706	2	.133	2
6869	P1718	max	T	-.127	2	-.486	2	.506	1	.812	1	1.194	1
6870		min		-.305	1	-1.317	1	.179	2	.774	2	.436	2
6871		max	B	1.344	1	.266	1	.539	1	2.356	2	1.233	1

Envelope Plate/Shell Principal Stresses (Continued)

	Plate		Sur...	Sigma1 [ksi]	LC	Sigma2 [ksi]	LC	Tau Max [k...	LC	Angle [rad]	LC	Von Mises [ksi]	LC
6872		min		.512	2	.089	2	.212	2	-.755	1	.474	2
6873	P1719	max	T	-.018	2	-.08	2	.087	1	.814	1	.196	1
6874		min		-.039	1	-.213	1	.031	2	.781	2	.072	2
6875		max	B	.214	1	.027	1	.094	1	2.351	2	.202	1
6876		min		.081	2	.007	2	.037	2	-.76	1	.078	2
6877	P1720	max	T	-.043	2	-.145	2	.139	1	.657	1	.335	1
6878		min		-.094	1	-.372	1	.051	2	.551	2	.129	2
6879		max	B	.372	1	.068	1	.152	1	2.279	1	.343	1
6880		min		.143	2	.019	2	.062	2	2.262	2	.134	2
6881	P1721	max	T	-.099	2	-.431	2	.473	1	1.08	1	1.099	1
6882		min		-.261	1	-1.206	1	.166	2	1.039	2	.391	2
6883		max	B	1.225	1	.246	1	.489	1	-.488	1	1.122	1
6884		min		.45	2	.077	2	.186	2	-.53	2	.417	2
6885	P1722	max	T	-.077	2	-.256	2	.292	1	.955	1	.691	1
6886		min		-.179	1	-.763	1	.09	2	.831	2	.228	2
6887		max	B	.791	1	.172	1	.31	1	-.59	1	.721	1
6888		min		.287	2	.062	2	.113	2	-.648	2	.262	2
6889	P1723	max	T	-.048	2	-.212	2	.184	1	.475	1	.444	1
6890		min		-.126	1	-.494	1	.082	2	.35	2	.192	2
6891		max	B	.47	1	.109	1	.18	1	2.12	1	.426	1
6892		min		.184	2	.033	2	.075	2	2.096	2	.169	2
6893	P1724	max	T	-.019	2	-.258	2	.249	1	.451	1	.527	1
6894		min		-.055	1	-.552	1	.12	2	.347	2	.249	2
6895		max	B	.509	1	.05	1	.229	1	2.072	1	.486	1
6896		min		.208	2	.015	2	.096	2	2.029	2	.201	2
6897	P1725	max	T	-.04	2	-.372	2	.387	1	.656	1	.817	1
6898		min		-.08	1	-.854	1	.166	2	.507	2	.353	2
6899		max	B	.806	1	.119	1	.343	1	2.246	1	.753	1
6900		min		.315	2	.067	2	.124	2	2.13	2	.288	2
6901	P1726	max	T	.03	1	-.353	2	.428	1	.677	1	.842	1
6902		min		-.015	2	-.827	1	.169	2	.549	2	.346	2
6903		max	B	.783	1	.024	2	.394	1	2.238	1	.786	1
6904		min		.304	2	-.006	1	.14	2	2.111	2	.293	2
6905	P1727	max	T	.015	1	-.272	2	.288	1	.492	1	.568	1
6906		min		.003	2	-.561	1	.137	2	.388	2	.273	2
6907		max	B	.518	1	.003	2	.262	1	2.077	1	.521	1
6908		min		.222	2	-.006	1	.109	2	1.993	2	.22	2
6909	P1728	max	T	.037	1	-.269	2	.297	1	.502	1	.577	1
6910		min		.002	2	-.558	1	.136	2	.372	2	.27	2
6911		max	B	.537	1	.002	2	.281	1	2.061	1	.55	1
6912		min		.239	2	-.026	1	.118	2	1.934	2	.238	2
6913	P1729	max	T	.07	1	-.298	2	.398	1	.679	1	.762	1
6914		min		0	2	-.725	1	.148	2	.549	2	.297	2
6915		max	B	.698	1	.009	2	.374	1	2.233	1	.724	1
6916		min		.264	2	-.049	1	.127	2	2.101	2	.26	2
6917	P1730	max	T	.088	1	-.23	2	.335	1	.682	1	.631	1
6918		min		.006	2	-.582	1	.118	2	.559	2	.233	2
6919		max	B	.572	1	.002	2	.321	1	2.231	1	.609	1
6920		min		.21	2	-.069	1	.104	2	2.103	2	.209	2
6921	P1731	max	T	.052	1	-.232	2	.279	1	.491	1	.534	1
6922		min		.004	2	-.506	1	.118	2	.341	2	.234	2
6923		max	B	.509	1	-.001	2	.276	1	2.038	1	.532	1
6924		min		.222	2	-.042	1	.111	2	1.89	2	.222	2
6925	P1732	max	T	.047	1	-.178	2	.227	1	.483	1	.432	1
6926		min		.004	2	-.407	1	.091	2	.341	2	.18	2
6927		max	B	.426	1	-.001	2	.232	1	2.016	1	.446	1
6928		min		.181	2	-.037	1	.091	2	1.876	2	.181	2

Envelope Plate/Shell Principal Stresses (Continued)

	Plate		Sur...	Sigma1 [ksi]	LC	Sigma2 [ksi]	LC	Tau Max [k...	LC	Angle [rad]	LC	Von Mises [ksi]	LC
6929	P1733	max	T	.096	1	-.164	2	.267	1	.711	1	.493	1
6930		min		.012	2	-.438	1	.088	2	.596	2	.171	2
6931		max	B	.439	1	-.003	2	.257	1	2.251	1	.481	1
6932		min		.155	2	-.076	1	.079	2	2.127	2	.156	2
6933	P1734	max	T	.105	1	-.108	2	.208	1	.775	1	.375	1
6934		min		.019	2	-.312	1	.064	2	.682	2	.119	2
6935		max	B	.319	1	-.008	2	.2	1	2.303	1	.367	1
6936		min		.105	2	-.082	1	.056	2	2.188	2	.109	2
6937	P1735	max	T	.047	1	-.122	2	.169	1	.518	1	.318	1
6938		min		.005	2	-.291	1	.064	2	.374	2	.125	2
6939		max	B	.321	1	-.002	2	.178	1	2.031	1	.34	1
6940		min		.134	2	-.035	1	.068	2	1.885	2	.135	2
6941	P1736	max	T	.053	1	-.071	2	.12	1	.615	1	.219	1
6942		min		.008	2	-.187	1	.039	2	.474	2	.075	2
6943		max	B	.22	1	-.002	2	.128	1	2.091	1	.24	1
6944		min		.088	2	-.037	1	.045	2	1.924	2	.089	2
6945	P1737	max	T	.123	1	-.064	2	.166	1	.881	1	.291	1
6946		min		.03	2	-.209	1	.047	2	.847	2	.084	2
6947		max	B	.218	1	-.015	2	.156	1	2.322	2	.278	1
6948		min		.064	2	-.094	1	.039	2	-.749	1	.073	2
6949	P1738	max	T	.151	1	-.035	2	.142	1	1.081	2	.247	1
6950		min		.05	2	-.134	1	.042	2	1.024	1	.074	2
6951		max	B	.141	1	-.028	2	.128	1	-.581	2	.222	1
6952		min		.034	2	-.115	1	.031	2	-.614	1	.054	2
6953	P1739	max	T	.071	1	-.031	2	.087	1	.809	1	.152	1
6954		min		.016	2	-.104	1	.023	2	.765	2	.041	2
6955		max	B	.132	1	-.005	2	.088	1	2.223	1	.159	1
6956		min		.047	2	-.045	1	.026	2	2.048	2	.05	2
6957	P1740	max	T	.11	1	-.011	2	.08	1	1.209	2	.142	1
6958		min		.041	2	-.051	1	.026	2	1.08	1	.047	2
6959		max	B	.067	1	-.014	2	.067	1	-.671	1	.116	1
6960		min		.017	2	-.067	1	.015	2	-.696	2	.026	2
6961	P1741	max	T	.191	1	-.019	2	.137	1	1.281	2	.244	1
6962		min		.077	2	-.084	1	.048	2	1.177	1	.088	2
6963		max	B	.087	1	-.049	2	.117	1	-.329	2	.205	1
6964		min		.017	2	-.146	1	.033	2	-.453	1	.06	2
6965	P1742	max	T	.238	1	-.01	2	.145	1	1.4	2	.268	1
6966		min		.106	2	-.053	1	.058	2	1.304	1	.112	2
6967		max	B	.054	1	-.074	2	.12	1	-.175	2	.219	1
6968		min		.009	2	-.186	1	.042	2	-.307	1	.079	2
6969	P1743	max	T	.165	1	-.005	2	.096	1	1.414	2	.18	1
6970		min		.074	2	-.026	1	.039	2	1.292	1	.077	2
6971		max	B	.032	1	-.037	2	.07	1	-.251	2	.127	1
6972		min		.006	2	-.108	1	.022	2	-.389	1	.041	2
6973	P1744	max	T	.224	1	-.003	2	.12	1	1.492	2	.232	1
6974		min		.107	2	-.015	1	.055	2	1.41	1	.108	2
6975		max	B	.017	1	-.065	2	.088	1	-.103	2	.169	1
6976		min		.003	2	-.16	1	.034	2	-.212	1	.067	2
6977	P1745	max	T	.285	1	-.005	2	.16	1	1.467	2	.304	1
6978		min		.134	2	-.034	1	.07	2	1.396	1	.137	2
6979		max	B	.034	1	-.099	2	.132	1	-.097	2	.248	1
6980		min		.004	2	-.23	1	.052	2	-.198	1	.101	2
6981	P1746	max	T	.329	1	-.002	2	.176	1	1.505	2	.341	1
6982		min		.16	2	-.022	1	.081	2	1.459	1	.161	2
6983		max	B	.022	1	-.122	2	.146	1	-.056	2	.282	1
6984		min		.001	2	-.271	1	.062	2	-.125	1	.122	2
6985	P1747	max	T	.279	1	-.001	2	.144	1	1.527	2	.284	1

Envelope Plate/Shell Principal Stresses (Continued)

	Plate		Sur...	Sigma1 [ksi]	LC	Sigma2 [ksi]	LC	Tau Max [k...	LC	Angle [rad]	LC	Von Mises [ksi]	LC
6986		min		.136	2	-.009	1	.069	2	1.475	1	.137	2
6987		max	B	.01	1	-.092	2	.11	1	-.049	2	.216	1
6988		min		.001	2	-.21	1	.046	2	-.12	1	.092	2
6989	P1748	max	T	.328	1	0	2	.167	1	1.545	2	.331	1
6990		min		.163	2	-.006	1	.081	2	1.513	1	.163	2
6991		max	B	.006	1	-.115	2	.131	1	-.025	2	.259	1
6992		min		0	2	-.256	1	.057	2	-.07	1	.115	2
6993	P1749	max	T	.368	1	0	2	.191	1	1.528	2	.375	1
6994		min		.182	2	-.015	1	.091	2	1.501	1	.182	2
6995		max	B	.014	1	-.141	2	.16	1	-.034	2	.314	1
6996		min		0	2	-.307	1	.071	2	-.076	1	.141	2
6997	P1750	max	T	.399	1	.001	2	.205	1	1.543	2	.404	1
6998		min		.201	2	-.01	1	.1	2	1.532	1	.2	2
6999		max	B	.009	1	-.158	2	.173	1	-.023	2	.342	1
7000		min		-.002	2	-.337	1	.078	2	-.043	1	.157	2
7001	P1751	max	T	.368	1	0	2	.186	1	1.556	2	.37	1
7002		min		.185	2	-.004	1	.093	2	1.537	1	.185	2
7003		max	B	.004	1	-.135	2	.149	1	-.013	2	.296	1
7004		min		0	2	-.294	1	.067	2	-.04	1	.135	2
7005	P1752	max	T	.401	1	0	2	.202	1	1.562	2	.403	1
7006		min		.204	2	-.003	1	.102	2	1.553	1	.204	2
7007		max	B	.003	1	-.151	2	.164	1	-.008	2	.327	1
7008		min		0	2	-.326	1	.076	2	-.021	1	.151	2
7009	P1753	max	T	.424	1	.002	2	.215	1	1.554	1	.427	1
7010		min		.215	2	-.006	1	.107	2	1.553	2	.214	2
7011		max	B	.005	1	-.172	2	.183	1	-.017	2	.364	1
7012		min		-.003	2	-.361	1	.084	2	-.02	1	.17	2
7013	P1754	max	T	.441	1	.003	2	.223	1	1.573	1	.443	1
7014		min		.227	2	-.004	1	.112	2	1.56	2	.225	2
7015		max	B	.003	1	-.182	2	.191	1	-.002	1	.38	1
7016		min		-.004	2	-.379	1	.089	2	-.014	2	.18	2
7017	P1755	max	T	.427	1	0	2	.214	1	1.565	2	.428	1
7018		min		.219	2	-.002	1	.109	2	1.564	1	.219	2
7019		max	B	.002	1	-.165	2	.176	1	-.005	2	.352	1
7020		min		0	2	-.351	1	.082	2	-.008	1	.165	2
7021	P1756	max	T	.445	1	0	2	.223	1	1.571	1	.445	1
7022		min		.23	2	-.001	1	.115	2	1.567	2	.23	2
7023		max	B	0	1	-.176	2	.185	1	0	1	.369	1
7024		min		0	2	-.369	1	.087	2	-.004	2	.175	2
7025	P1757	max	T	.452	1	.003	2	.227	1	1.585	1	.453	1
7026		min		.234	2	-.002	1	.115	2	1.565	2	.232	2
7027		max	B	.001	1	-.19	2	.196	1	.009	1	.391	1
7028		min		-.004	2	-.39	1	.093	2	-.013	2	.188	2
7029	P1758	max	T	.455	1	.004	2	.228	1	1.598	1	.456	1
7030		min		.237	2	-.002	1	.117	2	1.57	2	.235	2
7031		max	B	0	1	-.194	2	.198	1	.02	1	.396	1
7032		min		-.005	2	-.396	1	.095	2	-.013	2	.192	2
7033	P1759	max	T	.455	1	0	2	.228	1	1.579	1	.455	1
7034		min		.237	2	0	1	.118	2	1.569	2	.237	2
7035		max	B	0	1	-.183	2	.19	1	.007	1	.381	1
7036		min		0	2	-.38	1	.091	2	-.005	2	.183	2
7037	P1760	max	T	.458	1	.001	2	.229	1	1.585	1	.458	1
7038		min		.241	2	0	1	.12	2	1.57	2	.24	2
7039		max	B	0	1	-.187	2	.193	1	.013	1	.385	1
7040		min		-.001	2	-.386	1	.093	2	-.006	2	.187	2
7041	P1761	max	T	.451	1	.004	2	.226	1	1.61	1	.452	1
7042		min		.237	2	-.001	1	.117	2	1.574	2	.235	2

Envelope Plate/Shell Principal Stresses (Continued)

	Plate		Sur...	Sigma1 [ksi]	LC	Sigma2 [ksi]	LC	Tau Max [k...	LC	Angle [rad]	LC	Von Mises [ksi]	LC
7043		max	B	0	1	-.195	2	.197	1	.03	1	.395	1
7044		min		-.005	2	-.395	1	.095	2	-.014	2	.193	2
7045	P1762	max	T	.441	1	.003	2	.222	1	1.623	1	.442	1
7046		min		.232	2	-.003	1	.114	2	1.581	2	.231	2
7047		max	B	0	1	-.193	2	.194	1	.04	1	.388	1
7048		min		-.004	2	-.388	1	.094	2	-.012	2	.191	2
7049	P1763	max	T	.454	1	.001	2	.227	1	1.59	1	.454	1
7050		min		.24	2	0	1	.12	2	1.571	2	.24	2
7051		max	B	0	1	-.188	2	.192	1	.018	1	.385	1
7052		min		0	2	-.385	1	.094	2	-.006	2	.188	2
7053	P1764	max	T	.443	1	0	2	.222	1	1.596	1	.443	1
7054		min		.236	2	0	1	.117	2	1.574	2	.235	2
7055		max	B	0	1	-.186	2	.189	1	.023	1	.378	1
7056		min		0	2	-.378	1	.093	2	-.004	2	.186	2
7057	P1765	max	T	.424	1	.003	2	.214	1	1.638	1	.426	1
7058		min		.224	2	-.004	1	.111	2	1.583	2	.223	2
7059		max	B	.002	1	-.187	2	.189	1	.052	1	.377	1
7060		min		-.004	2	-.375	1	.092	2	-.015	2	.185	2
7061	P1766	max	T	.4	1	.002	2	.204	1	1.657	1	.404	1
7062		min		.212	2	-.007	1	.105	2	1.592	2	.211	2
7063		max	B	.005	1	-.178	2	.181	1	.068	1	.359	1
7064		min		-.003	2	-.357	1	.088	2	-.011	2	.177	2
7065	P1767	max	T	.425	1	0	2	.213	1	1.603	1	.426	1
7066		min		.227	2	-.001	1	.113	2	1.575	2	.227	2
7067		max	B	0	1	-.181	2	.183	1	.03	1	.365	1
7068		min		0	2	-.365	1	.09	2	-.005	2	.181	2
7069	P1768	max	T	.401	1	0	2	.201	1	1.613	1	.401	1
7070		min		.215	2	-.002	1	.107	2	1.576	2	.214	2
7071		max	B	.002	1	-.172	2	.174	1	.038	1	.347	1
7072		min		0	2	-.346	1	.086	2	-.007	2	.172	2
7073	P1769	max	T	.37	1	.001	2	.191	1	1.682	1	.376	1
7074		min		.196	2	-.011	1	.097	2	1.603	2	.195	2
7075		max	B	.009	1	-.166	2	.171	1	.09	1	.338	1
7076		min		-.002	2	-.333	1	.082	2	-.006	2	.165	2
7077	P1770	max	T	.335	1	0	2	.176	1	1.717	1	.344	1
7078		min		.176	2	-.018	1	.089	2	1.618	2	.177	2
7079		max	B	.014	1	-.151	2	.159	1	.121	1	.311	1
7080		min		0	2	-.304	1	.075	2	.004	2	.151	2
7081	P1771	max	T	.369	1	0	2	.186	1	1.626	1	.371	1
7082		min		.198	2	-.003	1	.099	2	1.577	2	.199	2
7083		max	B	.003	1	-.16	2	.162	1	.051	1	.323	1
7084		min		0	2	-.322	1	.08	2	-.008	2	.16	2
7085	P1772	max	T	.331	1	0	2	.168	1	1.645	1	.333	1
7086		min		.179	2	-.005	1	.089	2	1.586	2	.179	2
7087		max	B	.004	1	-.145	2	.148	1	.07	1	.293	1
7088		min		0	2	-.291	1	.073	2	0	2	.145	2
7089	P1773	max	T	.294	1	-.003	2	.16	1	1.767	1	.308	1
7090		min		.153	2	-.027	1	.078	2	1.644	2	.155	2
7091		max	B	.022	1	-.132	2	.146	1	.167	1	.281	1
7092		min		.002	2	-.27	1	.067	2	.022	2	.133	2
7093	P1774	max	T	.249	1	-.006	2	.145	1	1.84	1	.272	1
7094		min		.127	2	-.041	1	.067	2	1.686	2	.13	2
7095		max	B	.034	1	-.111	2	.133	1	.234	1	.251	1
7096		min		.004	2	-.232	1	.057	2	.056	2	.113	2
7097	P1775	max	T	.286	1	0	2	.147	1	1.675	1	.29	1
7098		min		.155	2	-.007	1	.077	2	1.597	2	.155	2
7099		max	B	.007	1	-.127	2	.131	1	.099	1	.258	1

Envelope Plate/Shell Principal Stresses (Continued)

	Plate		Sur...	Sigma1 [ksi]	LC	Sigma2 [ksi]	LC	Tau Max [k...	LC	Angle [rad]	LC	Von Mises [ksi]	LC
7100		min		0	2	-.255	1	.063	2	.009	2	.127	2
7101	P1776	max	T	.235	1	-.001	2	.123	1	1.724	1	.241	1
7102		min		.127	2	-.011	1	.064	2	1.618	2	.128	2
7103		max	B	.01	1	-.105	2	.112	1	.147	1	.218	1
7104		min		.001	2	-.213	1	.053	2	.029	2	.105	2
7105	P1777	max	T	.204	1	-.011	2	.134	1	1.943	1	.242	1
7106		min		.098	2	-.063	1	.055	2	1.762	2	.104	2
7107		max	B	.054	1	-.086	2	.123	1	.331	1	.224	1
7108		min		.008	2	-.193	1	.047	2	.12	2	.091	2
7109	P1778	max	T	.162	1	-.02	2	.131	1	2.077	1	.229	1
7110		min		.069	2	-.099	1	.045	2	1.899	2	.081	2
7111		max	B	.085	1	-.06	2	.12	1	.46	1	.211	1
7112		min		.015	2	-.156	1	.038	2	.244	2	.069	2
7113	P1779	max	T	.18	1	-.003	2	.1	1	1.811	1	.19	1
7114		min		.097	2	-.019	1	.05	2	1.659	2	.098	2
7115		max	B	.017	1	-.079	2	.092	1	.232	1	.175	1
7116		min		.002	2	-.166	1	.041	2	.069	2	.081	2
7117	P1780	max	T	.124	1	-.005	2	.08	1	1.973	1	.145	1
7118		min		.063	2	-.035	1	.034	2	1.756	2	.066	2
7119		max	B	.031	1	-.051	2	.075	1	.384	1	.137	1
7120		min		.005	2	-.119	1	.028	2	.168	2	.054	2
7121	P1781	max	T	.129	1	-.038	2	.142	1	2.222	1	.246	1
7122		min		.043	2	-.154	1	.041	2	2.12	2	.07	2
7123		max	B	.133	1	-.036	2	.129	1	.602	1	.224	1
7124		min		.029	2	-.126	1	.033	2	.465	2	.057	2
7125	P1782	max	T	.106	1	-.071	2	.169	1	2.353	2	.299	1
7126		min		.025	2	-.232	1	.048	2	2.346	1	.086	2
7127		max	B	.202	1	-.02	2	.153	1	.727	1	.27	1
7128		min		.056	2	-.105	1	.038	2	.723	2	.068	2
7129	P1783	max	T	.079	1	-.013	2	.074	1	2.229	1	.128	1
7130		min		.03	2	-.069	1	.022	2	2.032	2	.039	2
7131		max	B	.061	1	-.024	2	.07	1	.623	1	.121	1
7132		min		.012	2	-.079	1	.018	2	.465	2	.031	2
7133	P1784	max	T	.052	1	-.039	2	.092	1	-.63	2	.164	1
7134		min		.011	2	-.132	1	.025	2	-.667	1	.046	2
7135		max	B	.116	1	-.008	2	.085	1	.95	2	.151	1
7136		min		.035	2	-.054	1	.022	2	.86	1	.04	2
7137	P1785	max	T	.091	1	-.117	2	.211	1	-.64	2	.386	1
7138		min		.015	2	-.332	1	.066	2	-.709	1	.125	2
7139		max	B	.292	1	-.011	2	.192	1	.889	2	.347	1
7140		min		.096	2	-.092	1	.054	2	.816	1	.102	2
7141	P1786	max	T	.082	1	-.174	2	.267	1	-.566	2	.498	1
7142		min		.009	2	-.452	1	.092	2	-.658	1	.179	2
7143		max	B	.4	1	-.006	2	.243	1	.969	2	.449	1
7144		min		.146	2	-.086	1	.076	2	.869	1	.149	2
7145	P1787	max	T	.041	1	-.083	2	.13	1	-.411	2	.242	1
7146		min		.005	2	-.219	1	.044	2	-.524	1	.086	2
7147		max	B	.193	1	-.004	2	.119	1	1.153	2	.218	1
7148		min		.075	2	-.044	1	.039	2	1.005	1	.077	2
7149	P1788	max	T	.037	1	-.135	2	.179	1	-.339	2	.34	1
7150		min		.003	2	-.32	1	.069	2	-.456	1	.137	2
7151		max	B	.284	1	-.003	2	.163	1	1.217	2	.307	1
7152		min		.121	2	-.041	1	.062	2	1.077	1	.122	2
7153	P1789	max	T	.073	1	-.24	2	.33	1	-.535	2	.627	1
7154		min		.003	2	-.587	1	.122	2	-.635	1	.242	2
7155		max	B	.521	1	-.002	2	.301	1	1.002	2	.566	1
7156		min		.203	2	-.08	1	.102	2	.893	1	.204	2

Envelope Plate/Shell Principal Stresses (Continued)

	Plate		Sur...	Sigma1 [ksi]	LC	Sigma2 [ksi]	LC	Tau Max [k...	LC	Angle [rad]	LC	Von Mises [ksi]	LC
7157	P1790	max	T	.053	1	-.308	2	.386	1	-.529	2	.747	1
7158		min		-.005	2	-.719	1	.151	2	-.634	1	.305	2
7159		max	B	.637	1	.005	2	.351	1	1.008	2	.672	1
7160		min		.26	2	-.064	1	.127	2	.892	1	.257	2
7161	P1791	max	T	.037	1	-.191	2	.233	1	-.318	2	.448	1
7162		min		.002	2	-.428	1	.097	2	-.433	1	.193	2
7163		max	B	.381	1	-.003	2	.212	1	1.236	2	.404	1
7164		min		.169	2	-.043	1	.086	2	1.101	1	.17	2
7165	P1792	max	T	.04	1	-.245	2	.28	1	-.324	2	.541	1
7166		min		.002	2	-.52	1	.123	2	-.446	1	.246	2
7167		max	B	.46	1	-.003	2	.254	1	1.226	2	.485	1
7168		min		.213	2	-.048	1	.108	2	1.085	1	.214	2
7169	P1793	max	T	.011	1	-.362	2	.412	1	-.531	2	.818	1
7170		min		-.02	2	-.812	1	.171	2	-.635	1	.353	2
7171		max	B	.714	1	.018	2	.371	1	.999	2	.729	1
7172		min		.303	2	-.029	1	.142	2	.886	1	.294	2
7173	P1794	max	T	-.05	2	-.38	2	.378	1	-.49	2	.796	1
7174		min		-.075	1	-.831	1	.165	2	-.604	1	.358	2
7175		max	B	.732	1	.068	1	.332	1	.979	2	.701	1
7176		min		.316	2	.06	2	.128	2	.868	1	.291	2
7177	P1795	max	T	.026	1	-.279	2	.296	1	-.358	2	.58	1
7178		min		0	2	-.566	1	.139	2	-.463	1	.279	2
7179		max	B	.487	1	0	2	.261	1	1.184	2	.506	1
7180		min		.234	2	-.036	1	.117	2	1.062	1	.234	2
7181	P1796	max	T	.013	1	-.279	2	.288	1	-.38	2	.57	1
7182		min		0	2	-.564	1	.139	2	-.459	1	.279	2
7183		max	B	.466	1	.001	2	.242	1	1.13	2	.475	1
7184		min		.22	2	-.018	1	.109	2	1.042	1	.219	2
7185	P1797	max	T	-.085	2	-.26	2	.249	1	2.306	2	.604	1
7186		min		-.174	1	-.672	1	.087	2	2.221	1	.229	2
7187		max	B	.741	1	.119	1	.311	1	.643	2	.689	1
7188		min		.296	2	.058	2	.119	2	.606	1	.272	2
7189	P1798	max	T	-.105	2	-.439	2	.425	1	2.094	2	.998	1
7190		min		-.249	1	-1.099	1	.167	2	2.066	1	.397	2
7191		max	B	1.135	1	.196	1	.469	1	.531	2	1.05	1
7192		min		.46	2	.076	2	.192	2	.506	1	.427	2
7193	P1799	max	T	-.021	2	-.263	2	.247	1	-.341	2	.522	1
7194		min		-.05	1	-.545	1	.121	2	-.413	1	.253	2
7195		max	B	.457	1	.03	1	.214	1	1.099	2	.443	1
7196		min		.208	2	.014	2	.097	2	1.038	1	.202	2
7197	P1800	max	T	-.05	2	-.215	2	.176	1	-.349	2	.425	1
7198		min		-.12	1	-.472	1	.082	2	-.432	1	.195	2
7199		max	B	.43	1	.084	1	.173	1	1.039	2	.395	1
7200		min		.186	2	.033	2	.076	2	.993	1	.172	2
7201	P1801	max	T	-.129	2	-.495	2	.46	1	2.335	1	1.095	1
7202		min		-.291	1	-1.211	1	.183	2	-.78	2	.445	2
7203		max	B	1.254	1	.228	1	.513	1	.786	2	1.157	1
7204		min		.52	2	.092	2	.214	2	.765	1	.481	2
7205	P1802	max	T	-.044	2	-.147	2	.131	1	2.137	2	.32	1
7206		min		-.095	1	-.357	1	.051	2	2.135	1	.13	2
7207		max	B	.352	1	.053	1	.149	1	.7	2	.328	1
7208		min		.144	2	.019	2	.062	2	.659	1	.136	2
7209	P1803	max	T	-.044	2	-.147	2	.126	1	-.555	2	.31	1
7210		min		-.095	1	-.346	1	.052	2	-.628	1	.131	2
7211		max	B	.344	1	.051	1	.147	1	.877	2	.322	1
7212		min		.145	2	.02	2	.062	2	.853	1	.136	2
7213	P1804	max	T	-.019	2	-.081	2	.078	1	2.336	1	.18	1

Envelope Plate/Shell Principal Stresses (Continued)

	Plate		Sur...	Sigma1 [ksi]	LC	Sigma2 [ksi]	LC	Tau Max [k...	LC	Angle [rad]	LC	Von Mises [ksi]	LC
7214		min		-.039	1	-.196	1	.031	2	-.782	2	.074	2
7215		max	B	.198	1	.02	1	.089	1	.788	2	.189	1
7216		min		.082	2	.007	2	.038	2	.768	1	.079	2
7217	P1805	max	T	1.217	1	.534	1	.342	1	1.262	1	1.057	1
7218		min		.602	2	.258	2	.172	2	1.07	2	.523	2
7219		max	B	-.265	2	-.673	2	.396	1	-.325	1	1.165	1
7220		min		-.547	1	-1.338	1	.204	2	-.467	2	.587	2
7221	P1806	max	T	1.109	1	.463	1	.323	1	1.011	1	.964	1
7222		min		.643	2	.259	2	.192	2	.858	2	.56	2
7223		max	B	-.271	2	-.73	2	.392	1	-.535	1	1.101	1
7224		min		-.475	1	-1.259	1	.23	2	-.639	2	.639	2
7225	P1807	max	T	1.273	1	.464	1	.404	1	2.324	2	1.116	1
7226		min		.644	2	.244	2	.2	2	2.258	1	.563	2
7227		max	B	-.254	2	-.719	2	.395	1	1.077	2	1.142	1
7228		min		-.52	1	-1.309	1	.232	2	.924	1	.632	2
7229	P1808	max	T	1.077	1	.418	1	.33	1	-.609	2	.941	1
7230		min		.615	2	.25	2	.183	2	-.699	1	.535	2
7231		max	B	-.26	2	-.689	2	.326	1	1.258	2	.976	1
7232		min		-.47	1	-1.122	1	.214	2	1.123	1	.602	2
7233	P1809	max	T	2.901	1	1.071	1	.915	1	.827	1	2.541	1
7234		min		.632	2	.218	2	.207	2	.751	2	.556	2
7235		max	B	-.205	2	-.543	2	.831	1	-.43	2	2.387	1
7236		min		-1.072	1	-2.734	1	.169	2	-.656	1	.475	2
7237	P1810	max	T	2.598	1	.976	1	.811	1	.988	1	2.273	1
7238		min		.606	2	.219	2	.194	2	.93	2	.532	2
7239		max	B	-.207	2	-.53	2	.723	1	-.203	2	2.123	1
7240		min		-.991	1	-2.437	1	.162	2	-.474	1	.463	2
7241	P1811	max	T	2.729	1	1.097	1	.816	1	-.43	1	2.379	1
7242		min		.592	2	.23	2	.181	2	-.539	2	.517	2
7243		max	B	-.221	2	-.505	2	.776	1	1.164	2	2.294	1
7244		min		-1.082	1	-2.634	1	.142	2	1.156	1	.438	2
7245	P1812	max	T	2.757	1	1.042	1	.858	1	-.614	1	2.411	1
7246		min		.629	2	.233	2	.198	2	-.715	2	.551	2
7247		max	B	-.226	2	-.548	2	.821	1	.963	1	2.335	1
7248		min		-1.031	1	-2.673	1	.161	2	.942	2	.477	2
7249	P1813	max	T	.715	1	.484	1	.116	1	.49	1	.632	1
7250		min		.498	2	.299	2	.1	2	.347	2	.434	2
7251		max	B	-.289	2	-.587	2	.206	1	2.217	1	.75	1
7252		min		-.453	1	-.866	1	.149	2	2.12	2	.508	2
7253	P1814	max	T	.808	1	.461	1	.174	1	.781	1	.702	1
7254		min		.52	2	.276	2	.122	2	.608	2	.451	2
7255		max	B	-.272	2	-.615	2	.263	1	2.315	2	.84	1
7256		min		-.443	1	-.968	1	.171	2	-.723	1	.533	2
7257	P1815	max	T	.729	1	.512	1	.108	1	.739	1	.648	1
7258		min		.476	2	.303	2	.087	2	.499	2	.417	2
7259		max	B	-.293	2	-.575	2	.208	1	2.251	2	.777	1
7260		min		-.482	1	-.897	1	.141	2	-.763	1	.498	2
7261	P1816	max	T	1.018	1	.633	1	.192	1	1.374	1	.89	1
7262		min		.489	2	.29	2	.1	2	1.037	2	.426	2
7263		max	B	-.282	2	-.561	2	.254	1	-.256	1	.984	1
7264		min		-.625	1	-1.134	1	.14	2	-.478	2	.486	2
7265	P1817	max	T	.909	1	.508	1	.2	1	1.016	1	.789	1
7266		min		.519	2	.269	2	.125	2	.796	2	.449	2
7267		max	B	-.27	2	-.605	2	.279	1	-.534	1	.916	1
7268		min		-.5	1	-1.058	1	.167	2	-.67	2	.525	2
7269	P1818	max	T	.923	1	.601	1	.161	1	1.243	1	.812	1
7270		min		.476	2	.297	2	.09	2	.864	2	.417	2

Envelope Plate/Shell Principal Stresses (Continued)

	Plate		Sur...	Sigma1 [ksi]	LC	Sigma2 [ksi]	LC	Tau Max [k...	LC	Angle [rad]	LC	Von Mises [ksi]	LC
7271		max	B	-.287	2	-.554	2	.235	1	-.384	1	.915	1
7272		min		-.585	1	-1.054	1	.134	2	-.611	2	.48	2
7273	P1819	max	T	2.104	1	.968	1	.568	1	2.236	2	1.824	1
7274		min		.527	2	.245	2	.141	2	-.768	1	.457	2
7275		max	B	-.247	2	-.464	2	.534	1	.808	1	1.769	1
7276		min		-.974	1	-2.042	1	.108	2	.727	2	.402	2
7277	P1820	max	T	1.873	1	.982	1	.446	1	2.342	1	1.623	1
7278		min		.488	2	.263	2	.112	2	2.145	2	.423	2
7279		max	B	-.275	2	-.433	2	.411	1	.775	1	1.578	1
7280		min		-.997	1	-1.82	1	.079	2	.603	2	.38	2
7281	P1821	max	T	1.816	1	.904	1	.456	1	2.208	1	1.573	1
7282		min		.495	2	.265	2	.115	2	2.021	2	.429	2
7283		max	B	-.275	2	-.45	2	.425	1	.632	1	1.537	1
7284		min		-.925	1	-1.774	1	.087	2	.455	2	.393	2
7285	P1822	max	T	2.226	1	1.19	1	.518	1	-.408	1	1.929	1
7286		min		.493	2	.246	2	.123	2	-.563	2	.427	2
7287		max	B	-.254	2	-.416	2	.479	1	1.185	1	1.861	1
7288		min		-1.186	1	-2.144	1	.081	2	1.161	2	.363	2
7289	P1823	max	T	2.106	1	1.154	1	.476	1	-.533	1	1.827	1
7290		min		.488	2	.251	2	.118	2	-.7	2	.422	2
7291		max	B	-.262	2	-.405	2	.433	1	1.058	1	1.758	1
7292		min		-1.157	1	-2.023	1	.071	2	.989	2	.355	2
7293	P1824	max	T	2.243	1	1.049	1	.597	1	-.625	1	1.944	1
7294		min		.525	2	.235	2	.145	2	-.753	2	.455	2
7295		max	B	-.24	2	-.45	2	.558	1	.956	1	1.876	1
7296		min		-1.05	1	-2.166	1	.105	2	.908	2	.39	2
7297	P1825	max	T	2.37	1	1.255	1	.557	1	.424	1	2.053	1
7298		min		.485	2	.252	2	.117	2	.345	2	.42	2
7299		max	B	-.231	2	-.402	2	.492	1	2.275	2	1.936	1
7300		min		-1.247	1	-2.23	1	.085	2	2.054	1	.349	2
7301	P1826	max	T	2.288	1	1.228	1	.53	1	.546	1	1.983	1
7302		min		.475	2	.247	2	.114	2	.483	2	.412	2
7303		max	B	-.241	2	-.4	2	.455	1	2.182	1	1.868	1
7304		min		-1.24	1	-2.149	1	.08	2	-.698	2	.349	2
7305	P1827	max	T	2.476	1	1.158	1	.659	1	.628	1	2.146	1
7306		min		.519	2	.233	2	.143	2	.556	2	.45	2
7307		max	B	-.216	2	-.435	2	.585	1	2.272	1	2.014	1
7308		min		-1.155	1	-2.325	1	.11	2	-.639	2	.377	2
7309	P1828	max	T	2.393	1	1.067	1	.663	1	.763	1	2.076	1
7310		min		.527	2	.219	2	.154	2	.717	2	.459	2
7311		max	B	-.229	2	-.44	2	.564	1	-.442	2	1.931	1
7312		min		-1.101	1	-2.229	1	.105	2	-.728	1	.381	2
7313	P1829	max	T	2.158	1	1.085	1	.537	1	.801	1	1.869	1
7314		min		.496	2	.24	2	.128	2	.792	2	.429	2
7315		max	B	-.251	2	-.407	2	.423	1	-.278	2	1.723	1
7316		min		-1.136	1	-1.982	1	.078	2	-.685	1	.356	2
7317	P1830	max	T	2.127	1	1.016	1	.555	1	.929	1	1.843	1
7318		min		.498	2	.232	2	.133	2	.912	2	.432	2
7319		max	B	-.255	2	-.434	2	.445	1	-.135	2	1.715	1
7320		min		-1.086	1	-1.977	1	.09	2	-.54	1	.378	2
7321	P1831	max	T	1.357	1	.74	1	.309	1	1.806	2	1.177	1
7322		min		.49	2	.281	2	.105	2	1.698	1	.426	2
7323		max	B	-.242	2	-.54	2	.286	1	.699	2	1.157	1
7324		min		-.759	1	-1.331	1	.149	2	.381	1	.469	2
7325	P1832	max	T	1.229	1	.68	1	.274	1	1.958	2	1.066	1
7326		min		.466	2	.283	2	.092	2	1.815	1	.407	2
7327		max	B	-.258	2	-.543	2	.259	1	.83	2	1.076	1

Envelope Plate/Shell Principal Stresses (Continued)

	Plate		Sur...	Sigma1 [ksi]	LC	Sigma2 [ksi]	LC	Tau Max [k...	LC	Angle [rad]	LC	Von Mises [ksi]	LC
7328		min		-.72	1	-1.237	1	.143	2	.505	1	.471	2
7329	P1833	max	T	1.233	1	.59	1	.322	1	2.06	2	1.068	1
7330		min		.519	2	.262	2	.128	2	1.982	1	.449	2
7331		max	B	-.244	2	-.587	2	.318	1	.877	2	1.085	1
7332		min		-.617	1	-1.252	1	.172	2	.653	1	.511	2
7333	P1834	max	T	1.092	1	.489	1	.302	1	2.245	2	.947	1
7334		min		.526	2	.253	2	.136	2	2.16	1	.455	2
7335		max	B	-.266	2	-.592	2	.283	1	1.033	2	.967	1
7336		min		-.551	1	-1.117	1	.163	2	.831	1	.514	2
7337	P1835	max	T	.985	1	.52	1	.232	1	2.332	2	.853	1
7338		min		.485	2	.285	2	.1	2	2.173	1	.422	2
7339		max	B	-.286	2	-.547	2	.209	1	1.129	2	.867	1
7340		min		-.578	1	-.997	1	.131	2	.86	1	.474	2
7341	P1836	max	T	.919	1	.462	1	.228	1	2.336	1	.796	1
7342		min		.491	2	.275	2	.108	2	-.666	2	.426	2
7343		max	B	-.296	2	-.564	2	.208	1	1.259	2	.829	1
7344		min		-.539	1	-.955	1	.134	2	1.033	1	.489	2
7345	P1837	max	T	2.353	1	.895	1	.729	1	1.151	1	2.057	1
7346		min		.587	2	.217	2	.185	2	1.106	2	.514	2
7347		max	B	-.212	2	-.542	2	.646	1	.013	2	1.933	1
7348		min		-.931	1	-2.222	1	.165	2	-.286	1	.474	2
7349	P1838	max	T	2.183	1	.832	1	.675	1	1.297	1	1.908	1
7350		min		.591	2	.22	2	.185	2	1.265	2	.517	2
7351		max	B	-.211	2	-.569	2	.601	1	.186	2	1.803	1
7352		min		-.872	1	-2.073	1	.179	2	-.115	1	.498	2
7353	P1839	max	T	1.984	1	.769	1	.607	1	1.45	1	1.732	1
7354		min		.589	2	.227	2	.181	2	1.438	2	.514	2
7355		max	B	-.212	2	-.594	2	.548	1	.353	2	1.656	1
7356		min		-.81	1	-1.906	1	.191	2	.062	1	.522	2
7357	P1840	max	T	1.776	1	.708	1	.534	1	1.615	2	1.549	1
7358		min		.584	2	.234	2	.175	2	1.6	1	.509	2
7359		max	B	-.217	2	-.611	2	.489	1	.506	2	1.499	1
7360		min		-.748	1	-1.726	1	.197	2	.232	1	.537	2
7361	P1841	max	T	.799	1	.384	1	.207	1	.147	2	.692	1
7362		min		.597	2	.26	2	.168	2	.146	1	.518	2
7363		max	B	-.272	2	-.687	2	.269	1	1.954	1	.812	1
7364		min		-.397	1	-.934	1	.208	2	1.93	2	.599	2
7365	P1842	max	T	.821	1	.372	1	.224	1	-.037	2	.712	1
7366		min		.602	2	.256	2	.173	2	-.091	1	.524	2
7367		max	B	-.272	2	-.689	2	.265	1	1.774	2	.81	1
7368		min		-.402	1	-.933	1	.209	2	1.757	1	.602	2
7369	P1843	max	T	.872	1	.371	1	.251	1	-.226	2	.758	1
7370		min		.603	2	.253	2	.175	2	-.312	1	.524	2
7371		max	B	-.271	2	-.685	2	.27	1	1.608	2	.831	1
7372		min		-.418	1	-.957	1	.207	2	1.545	1	.598	2
7373	P1844	max	T	.944	1	.383	1	.28	1	-.407	2	.822	1
7374		min		.597	2	.25	2	.174	2	-.504	1	.519	2
7375		max	B	-.269	2	-.678	2	.284	1	1.444	2	.877	1
7376		min		-.441	1	-1.01	1	.204	2	1.338	1	.591	2
7377	P1845	max	T	1.956	1	.774	1	.591	1	1.966	1	1.706	1
7378		min		.586	2	.245	2	.17	2	1.823	2	.51	2
7379		max	B	-.247	2	-.567	2	.578	1	.371	1	1.695	1
7380		min		-.789	1	-1.945	1	.16	2	.227	2	.492	2
7381	P1846	max	T	1.767	1	.711	1	.528	1	1.812	1	1.54	1
7382		min		.588	2	.249	2	.169	2	1.651	2	.511	2
7383		max	B	-.251	2	-.593	2	.529	1	.209	1	1.555	1
7384		min		-.728	1	-1.786	1	.171	2	.05	2	.515	2

Envelope Plate/Shell Principal Stresses (Continued)

	Plate		Sur...	Sigma1 [ksi]	LC	Sigma2 [ksi]	LC	Tau Max [k...	LC	Angle [rad]	LC	Von Mises [ksi]	LC
7385	P1847	max	T	1.563	1	.65	1	.456	1	1.648	1	1.36	1
7386		min		.587	2	.252	2	.167	2	1.467	2	.51	2
7387		max	B	-.255	2	-.617	2	.474	1	.041	1	1.407	1
7388		min		-.668	1	-1.616	1	.181	2	-.125	2	.537	2
7389	P1848	max	T	1.363	1	.597	1	.383	1	1.483	1	1.184	1
7390		min		.582	2	.256	2	.163	2	1.285	2	.506	2
7391		max	B	-.259	2	-.635	2	.42	1	-.123	1	1.261	1
7392		min		-.611	1	-1.45	1	.188	2	-.285	2	.553	2
7393	P1849	max	T	2.857	1	1.169	1	.844	1	.241	1	2.487	1
7394		min		.565	2	.226	2	.169	2	.145	2	.492	2
7395		max	B	-.206	2	-.477	2	.79	1	1.985	2	2.37	1
7396		min		-1.145	1	-2.725	1	.136	2	1.853	1	.415	2
7397	P1850	max	T	2.859	1	1.169	1	.845	1	.083	1	2.49	1
7398		min		.566	2	.226	2	.17	2	-.023	2	.493	2
7399		max	B	-.208	2	-.481	2	.799	1	1.791	2	2.385	1
7400		min		-1.143	1	-2.741	1	.137	2	1.688	1	.418	2
7401	P1851	max	T	2.82	1	1.157	1	.832	1	-.082	1	2.455	1
7402		min		.568	2	.227	2	.171	2	-.195	2	.495	2
7403		max	B	-.212	2	-.483	2	.79	1	1.589	2	2.36	1
7404		min		-1.133	1	-2.712	1	.136	2	1.517	1	.419	2
7405	P1852	max	T	2.737	1	1.134	1	.802	1	-.24	1	2.382	1
7406		min		.568	2	.227	2	.17	2	-.356	2	.495	2
7407		max	B	-.217	2	-.484	2	.762	1	1.393	2	2.294	1
7408		min		-1.113	1	-2.638	1	.134	2	1.353	1	.42	2
7409	P1889	max	T	12.529	1	6.372	1	3.079	1	1.902	2	10.851	1
7410		min		4.468	2	1.762	2	1.353	2	1.502	1	3.898	2
7411		max	B	-2.012	2	-4.318	2	3.209	1	.217	2	11.104	1
7412		min		-6.404	1	-12.822	1	1.153	2	-.077	1	3.742	2
7413	P1890	max	T	5.335	1	4.074	1	1.091	2	-.203	1	4.829	1
7414		min		2.784	2	.601	2	.631	1	-.707	2	2.537	2
7415		max	B	-.767	2	-2.678	2	.955	2	1.362	1	4.879	1
7416		min		-4.29	1	-5.307	1	.509	1	.869	2	2.388	2
7417	P1891	max	T	3.479	1	.908	1	1.285	1	-.158	1	3.125	1
7418		min		1.976	2	-.106	2	1.041	2	-.57	2	2.03	2
7419		max	B	.024	2	-1.932	2	1.194	1	1.413	1	3.056	1
7420		min		-1.055	1	-3.444	1	.978	2	1.007	2	1.944	2
7421	P1892	max	T	2.136	1	-.165	1	1.15	1	-.166	1	2.223	1
7422		min		1.346	2	-.198	2	.772	2	-.522	2	1.455	2
7423		max	B	.156	2	-1.326	2	1.081	1	1.404	1	2.13	1
7424		min		.066	1	-2.096	1	.741	2	1.049	2	1.411	2
7425	P1893	max	T	1.244	1	-.132	2	.808	1	-.202	1	1.466	1
7426		min		.893	2	-.372	1	.513	2	-.453	2	.966	2
7427		max	B	.308	1	-.882	2	.754	1	1.365	1	1.381	1
7428		min		.111	2	-1.201	1	.497	2	1.113	2	.943	2
7429	P1894	max	T	.71	1	-.085	2	.495	1	-.222	1	.884	1
7430		min		.675	2	-.28	1	.38	2	-.433	2	.721	2
7431		max	B	.242	1	-.665	2	.454	1	1.343	1	.814	1
7432		min		.075	2	-.666	1	.37	2	1.127	2	.705	2
7433	P1895	max	T	.539	2	-.102	2	.321	2	-.27	1	.597	2
7434		min		.437	1	-.161	1	.299	1	-.423	2	.536	1
7435		max	B	.143	1	-.39	1	.313	2	1.287	1	.583	2
7436		min		.099	2	-.528	2	.267	1	1.135	2	.478	1
7437	P1896	max	T	.503	2	-.05	1	.286	2	-.286	1	.54	2
7438		min		.289	1	-.069	2	.17	1	-.432	2	.317	1
7439		max	B	.07	2	-.235	1	.278	2	1.25	1	.525	2
7440		min		.047	1	-.487	2	.141	1	1.127	2	.262	1
7441	P1896A	max	T	12.372	1	6.157	1	3.107	1	1.789	2	10.714	1

Envelope Plate/Shell Principal Stresses (Continued)

	Plate		Sur...	Sigma1 [ksi]	LC	Sigma2 [ksi]	LC	Tau Max [k...	LC	Angle [rad]	LC	Von Mises [ksi]	LC
7442		min		3.641	2	1.498	2	1.072	2	1.329	1	3.169	2
7443		max	B	-1.774	2	-3.468	2	3.239	1	.085	2	10.969	1
7444		min		-6.186	1	-12.665	1	.847	2	-.245	1	3.004	2
7445	P1897	max	T	4.986	1	3.796	1	1.021	2	-.451	1	4.51	1
7446		min		2.558	2	.517	2	.595	1	-.777	2	2.343	2
7447		max	B	-.681	2	-2.464	2	.892	2	1.091	1	4.558	1
7448		min		-4.011	1	-4.957	1	.473	1	.818	2	2.204	2
7449	P1898	max	T	3.149	1	.59	1	1.28	1	-.397	1	2.899	1
7450		min		2.062	2	-.124	2	1.093	2	-.648	2	2.127	2
7451		max	B	.042	2	-2.029	2	1.184	1	1.171	1	2.813	1
7452		min		-.742	1	-3.11	1	1.035	2	.937	2	2.05	2
7453	P1899	max	T	1.798	2	-.061	2	1.18	1	-.469	1	2.127	1
7454		min		1.77	1	-.589	1	.93	2	-.624	2	1.829	2
7455		max	B	.487	1	-1.727	1	1.107	1	1.097	1	2.015	1
7456		min		.014	2	-1.786	2	.9	2	.954	2	1.793	2
7457	P1900	max	T	1.365	2	.129	2	.835	1	-.507	1	1.474	1
7458		min		1.115	1	-.556	1	.618	2	-.669	2	1.305	2
7459		max	B	.495	1	-1.065	1	.78	1	1.057	1	1.381	1
7460		min		-.15	2	-1.359	2	.604	2	.902	2	1.29	2
7461	P1901	max	T	.967	2	.076	2	.591	1	-.402	2	1.033	1
7462		min		.73	1	-.452	1	.446	2	-.627	1	.932	2
7463		max	B	.41	1	-.682	1	.546	1	1.168	2	.956	1
7464		min		-.09	2	-.958	2	.434	2	.929	1	.916	2
7465	P1902	max	T	1.054	2	.031	2	.511	2	-.425	2	1.039	2
7466		min		.353	1	-.23	1	.291	1	-.704	1	.508	1
7467		max	B	.212	1	-.306	1	.501	2	1.144	2	1.021	2
7468		min		-.039	2	-1.04	2	.259	1	.841	1	.451	1
7469	P1903	max	T	.92	2	-.017	2	.469	2	-.425	2	.929	2
7470		min		.256	1	-.069	1	.162	1	-.661	1	.296	1
7471		max	B	.068	1	-.214	1	.459	2	1.143	2	.91	2
7472		min		.015	2	-.902	2	.141	1	.865	1	.255	1
7473	P1903A	max	T	12.077	1	5.678	1	3.2	1	1.65	2	10.466	1
7474		min		2.883	2	1.277	2	.803	2	1.174	1	2.502	2
7475		max	B	-1.559	2	-2.709	2	3.335	1	-.101	2	10.724	1
7476		min		-5.699	1	-12.37	1	.575	2	-.397	1	2.355	2
7477	P1904	max	T	4.31	1	3.286	1	.854	2	2.353	1	3.9	1
7478		min		2.14	2	.432	2	.512	1	2.288	2	1.96	2
7479		max	B	-.586	2	-2.063	2	.738	2	.763	2	3.952	1
7480		min		-3.478	1	-4.298	1	.41	1	.692	1	1.841	2
7481	P1905	max	T	2.281	1	-.128	2	1.238	1	-.685	1	2.385	1
7482		min		1.902	2	-.195	1	1.015	2	-.694	2	1.97	2
7483		max	B	.048	2	-1.886	2	1.136	1	.902	2	2.254	1
7484		min		.036	1	-2.236	1	.967	2	.873	1	1.911	2
7485	P1906	max	T	1.789	2	-.142	2	1.232	1	-.696	2	2.135	1
7486		min		1.193	1	-1.272	1	.965	2	-.734	1	1.864	2
7487		max	B	1.155	1	-1.135	1	1.145	1	.888	2	1.983	1
7488		min		.089	2	-1.782	2	.935	2	.827	1	1.828	2
7489	P1907	max	T	2.417	2	.809	2	1.205	1	2.133	1	2.265	1
7490		min		.324	1	-2.086	1	.804	2	-.586	2	2.131	2
7491		max	B	2.005	1	-.261	1	1.133	1	.998	2	2.148	1
7492		min		-.848	2	-2.424	2	.788	2	.541	1	2.13	2
7493	P1908	max	T	2.088	2	.532	2	.778	2	1.809	1	1.879	2
7494		min		.395	1	-.545	1	.47	1	-.69	2	.818	1
7495		max	B	.527	1	-.322	1	.77	2	.886	2	1.869	2
7496		min		-.541	2	-2.08	2	.424	1	.192	1	.742	1
7497	P1909	max	T	1.276	2	.093	2	.592	2	2.072	1	1.232	2
7498		min		.307	1	-.177	1	.242	1	-.573	2	.425	1

Envelope Plate/Shell Principal Stresses (Continued)

	Plate		Sur...	Sigma1 [ksi]	LC	Sigma2 [ksi]	LC	Tau Max [k...	LC	Angle [rad]	LC	Von Mises [ksi]	LC
7499		max	B	.162	1	-.261	1	.584	2	1.003	2	1.219	2
7500		min		-.098	2	-1.265	2	.212	1	.484	1	.37	1
7501	P1910	max	T	1.077	2	-.011	2	.544	2	2.215	1	1.083	2
7502		min		.188	1	-.069	1	.128	1	-.545	2	.23	1
7503		max	B	.066	1	-.163	1	.537	2	1.027	2	1.069	2
7504		min		.009	2	-1.064	2	.115	1	.619	1	.205	1
7505	P1910A	max	T	11.601	1	5.069	1	3.266	1	1.462	2	10.074	1
7506		min		2.265	2	1.081	2	.592	2	1.036	1	1.962	2
7507		max	B	-1.33	2	-2.123	2	3.407	1	-.38	2	10.335	1
7508		min		-5.076	1	-11.891	1	.397	2	-.532	1	1.858	2
7509	P1911	max	T	3.426	1	2.072	1	.677	1	2.205	2	2.989	1
7510		min		1.624	2	.34	2	.642	2	1.809	1	1.484	2
7511		max	B	-.48	2	-1.57	2	.669	1	.718	2	3.063	1
7512		min		-2.166	1	-3.504	1	.545	2	.136	1	1.393	2
7513	P1912	max	T	1.317	2	-.211	2	1.145	1	2.189	1	1.988	1
7514		min		1.268	1	-1.022	1	.764	2	-.769	2	1.434	2
7515		max	B	.873	1	-1.223	1	1.048	1	.84	2	1.823	1
7516		min		.139	2	-1.317	2	.728	2	.589	1	1.391	2
7517	P1913	max	T	1.562	2	-.024	2	1.517	1	1.996	1	3.266	1
7518		min		-.422	1	-3.457	1	.793	2	-.633	2	1.574	2
7519		max	B	3.346	1	.454	1	1.446	1	.962	2	3.144	1
7520		min		-.034	2	-1.581	2	.773	2	.398	1	1.564	2
7521	P1914	max	T	.537	2	.04	2	.576	1	1.851	1	1.451	1
7522		min		-.478	1	-1.63	1	.249	2	-.284	2	.518	2
7523		max	B	1.586	1	.469	1	.559	1	1.322	2	1.411	1
7524		min		-.059	2	-.547	2	.244	2	.249	1	.52	2
7525	P1915	max	T	1.114	2	.482	1	.708	2	1.963	2	1.291	2
7526		min		.806	1	-.301	2	.162	1	1.369	1	.702	1
7527		max	B	.316	2	-.752	1	.709	2	.391	2	1.289	2
7528		min		-.48	1	-1.102	2	.136	1	-.251	1	.659	1
7529	P1916	max	T	1.085	2	.031	2	.527	2	1.803	1	1.069	2
7530		min		.292	1	-.125	1	.208	1	-.758	2	.37	1
7531		max	B	.124	1	-.267	1	.523	2	.815	2	1.062	2
7532		min		-.03	2	-1.077	2	.196	1	.229	1	.346	1
7533	P1917	max	T	.909	2	.007	2	.451	2	1.981	1	.906	2
7534		min		.182	1	-.062	1	.122	1	-.696	2	.22	1
7535		max	B	.063	1	-.173	1	.448	2	.876	2	.899	2
7536		min		-.007	2	-.902	2	.118	1	.402	1	.211	1
7537	P1917A	max	T	10.711	1	3.987	1	3.362	1	1.241	2	9.376	1
7538		min		1.824	2	.869	2	.477	2	.942	1	1.58	2
7539		max	B	-1.061	2	-1.733	2	3.512	1	-.624	1	9.644	1
7540		min		-3.971	1	-10.995	1	.336	2	-.69	2	1.513	2
7541	P1918	max	T	2.977	1	.984	1	.996	1	2.076	2	2.627	1
7542		min		1.072	2	.284	2	.394	2	1.487	1	.962	2
7543		max	B	-.412	2	-1.035	2	1.044	1	.664	2	2.74	1
7544		min		-1.015	1	-3.102	1	.311	2	-.15	1	.903	2
7545	P1919	max	T	.509	2	-.478	2	1.822	1	2.21	2	4.118	1
7546		min		-.824	1	-4.468	1	.494	2	1.718	1	.855	2
7547		max	B	4.371	1	.812	1	1.78	1	.706	2	4.027	1
7548		min		.398	2	-.528	2	.463	2	.114	1	.805	2
7549	P1920	max	T	.021	2	-.359	2	1.07	1	2.101	2	2.682	1
7550		min		-.869	1	-3.009	1	.19	2	1.665	1	.37	2
7551		max	B	2.975	1	.873	1	1.051	1	.551	2	2.648	1
7552		min		.317	2	-.031	2	.174	2	.07	1	.334	2
7553	P1921	max	T	.143	1	.111	1	.274	2	1.953	2	.545	2
7554		min		.005	2	-.542	2	.016	1	1.135	1	.13	1
7555		max	B	.55	2	.007	2	.272	2	.366	2	.547	2

Envelope Plate/Shell Principal Stresses (Continued)

	Plate		Sur...	Sigma1 [ksi]	LC	Sigma2 [ksi]	LC	Tau Max [k...	LC	Angle [rad]	LC	Von Mises [ksi]	LC
7556		min		-.122	1	-.136	1	.007	1	-.254	1	.129	1
7557	P1922	max	T	.376	2	-.022	2	.23	1	2.177	2	.402	1
7558		min		.171	1	-.289	1	.199	2	1.358	1	.388	2
7559		max	B	.283	1	-.16	1	.221	1	.597	2	.388	1
7560		min		.022	2	-.369	2	.195	2	-.223	1	.38	2
7561	P1923	max	T	.481	2	-.017	2	.249	2	2.226	2	.489	2
7562		min		.201	1	-.124	1	.163	1	1.489	1	.284	1
7563		max	B	.129	1	-.195	1	.245	2	.651	2	.482	2
7564		min		.018	2	-.473	2	.162	1	-.096	1	.282	1
7565	P1924	max	T	.512	2	.002	2	.255	2	2.346	2	.511	2
7566		min		.114	1	-.099	1	.106	1	1.552	1	.184	1
7567		max	B	.102	1	-.113	1	.253	2	.774	2	.506	2
7568		min		-.002	2	-.507	2	.107	1	-.026	1	.186	1
7569	P1924A	max	T	9.369	1	2.752	1	3.309	1	1	2	8.341	1
7570		min		1.512	2	.657	2	.428	2	.866	1	1.313	2
7571		max	B	-.797	2	-1.47	2	3.471	1	2.174	2	8.616	1
7572		min		-2.7	1	-9.643	1	.337	2	-.698	1	1.274	2
7573	P1925	max	T	2.9	1	.138	2	1.82	1	1.72	2	3.332	1
7574		min		.663	2	-.739	1	.262	2	1.278	1	.606	2
7575		max	B	.753	1	-.591	2	1.901	1	.311	2	3.487	1
7576		min		-.285	2	-3.049	1	.153	2	-.325	1	.512	2
7577	P1926	max	T	-.06	2	-.915	2	2.659	1	1.849	2	6.236	1
7578		min		-1.545	1	-6.863	1	.428	2	1.663	1	.887	2
7579		max	B	6.76	1	1.529	1	2.615	1	.336	2	6.14	1
7580		min		.789	2	.038	2	.376	2	.067	1	.771	2
7581	P1927	max	T	.328	1	-.174	1	.251	1	2.013	2	.441	1
7582		min		-.071	2	-.408	2	.169	2	.654	1	.378	2
7583		max	B	.421	2	.08	2	.236	1	2.212	1	.415	1
7584		min		.166	1	-.306	1	.17	2	.429	2	.387	2
7585	P1928	max	T	.065	2	-.228	2	.269	1	2.293	2	.628	1
7586		min		-.15	1	-.689	1	.146	2	1.341	1	.266	2
7587		max	B	.679	1	.155	1	.262	1	.728	2	.617	1
7588		min		.221	2	-.06	2	.14	2	-.225	1	.256	2
7589	P1929	max	T	.135	2	-.144	2	.154	1	1.093	1	.29	1
7590		min		.042	1	-.266	1	.139	2	-.735	2	.241	2
7591		max	B	.264	1	-.039	1	.152	1	.836	2	.286	1
7592		min		.141	2	-.125	2	.133	2	-.488	1	.23	2
7593	P1930	max	T	.199	2	-.038	2	.163	1	1.105	1	.297	1
7594		min		.074	1	-.253	1	.118	2	-.671	2	.22	2
7595		max	B	.255	1	-.074	1	.164	1	.902	2	.298	1
7596		min		.036	2	-.191	2	.113	2	-.475	1	.211	2
7597	P1931	max	T	.219	2	-.023	2	.121	2	1.08	1	.231	2
7598		min		.049	1	-.168	1	.108	1	-.704	2	.196	1
7599		max	B	.17	1	-.049	1	.118	2	.87	2	.225	2
7600		min		.022	2	-.213	2	.11	1	-.495	1	.199	1
7601	P1931A	max	T	7.645	1	1.194	1	3.225	1	.817	1	7.123	1
7602		min		1.304	2	.425	2	.44	2	.808	2	1.152	2
7603		max	B	-.552	2	-1.257	2	3.399	1	2.006	2	7.413	1
7604		min		-1.107	1	-7.904	1	.352	2	-.747	1	1.091	2
7605	P1932	max	T	2.566	1	-.15	2	2.353	1	1.389	2	4.081	1
7606		min		.418	2	-2.14	1	.284	2	1.17	1	.509	2
7607		max	B	2.195	1	-.344	2	2.451	1	-.095	2	4.253	1
7608		min		-.005	2	-2.708	1	.17	2	-.422	1	.342	2
7609	P1933	max	T	-.031	2	-.729	2	1.68	1	1.782	2	3.569	1
7610		min		-.384	1	-3.745	1	.349	2	1.655	1	.714	2
7611		max	B	3.683	1	.316	1	1.684	1	.243	2	3.536	1
7612		min		.671	2	.042	2	.314	2	.06	1	.651	2

Envelope Plate/Shell Principal Stresses (Continued)

	Plate		Sur...	Sigma1 [ksi]	LC	Sigma2 [ksi]	LC	Tau Max [k...	LC	Angle [rad]	LC	Von Mises [ksi]	LC
7613	P1934	max	T	-.039	2	-.325	2	.143	2	2.192	2	.372	1
7614		min		-.243	1	-.428	1	.092	1	1.953	1	.307	2
7615		max	B	.43	1	.237	1	.13	2	.595	2	.373	1
7616		min		.314	2	.054	2	.096	1	.387	1	.291	2
7617	P1935	max	T	.042	2	-.222	2	.209	1	1.007	1	.437	1
7618		min		-.037	1	-.455	1	.132	2	-.744	2	.246	2
7619		max	B	.45	1	.039	1	.205	1	.827	2	.432	1
7620		min		.217	2	-.034	2	.125	2	-.56	1	.235	2
7621	P1936	max	T	.093	2	-.148	2	.175	1	.959	1	.36	1
7622		min		-.019	1	-.369	1	.12	2	-.615	2	.21	2
7623		max	B	.366	1	.02	1	.173	1	.969	2	.357	1
7624		min		.144	2	-.086	2	.115	2	-.614	1	.201	2
7625	P1937	max	T	.117	2	-.107	2	.149	1	.86	1	.284	1
7626		min		.033	1	-.266	1	.112	2	-.543	2	.194	2
7627		max	B	.266	1	-.033	1	.15	1	1.044	2	.284	1
7628		min		.105	2	-.111	2	.108	2	-.714	1	.187	2
7629	P1938	max	T	.109	2	-.066	2	.124	1	.811	1	.235	1
7630		min		.029	1	-.219	1	.088	2	-.519	2	.153	2
7631		max	B	.221	1	-.029	1	.125	1	1.072	2	.237	1
7632		min		.068	2	-.103	2	.085	2	-.764	1	.149	2
7633	P1938A	max	T	5.743	1	.321	2	3.038	1	.8	1	5.917	1
7634		min		1.164	2	-.334	1	.422	2	.653	2	1.041	2
7635		max	B	.473	1	-1.09	2	3.226	1	1.848	2	6.23	1
7636		min		-.449	2	-5.98	1	.32	2	-.765	1	.949	2
7637	P1939	max	T	1.758	1	-.664	2	2.621	1	1.156	2	4.621	1
7638		min		.109	2	-3.484	1	.386	2	1.009	1	.724	2
7639		max	B	3.561	1	-.019	2	2.727	1	-.358	2	4.797	1
7640		min		.496	2	-1.894	1	.257	2	-.575	1	.506	2
7641	P1940	max	T	-.129	2	-.456	2	1.064	1	1.192	2	2.26	1
7642		min		-.244	1	-2.373	1	.163	2	1.038	1	.407	2
7643		max	B	2.387	1	.293	1	1.047	1	-.31	2	2.255	1
7644		min		.406	2	.112	2	.147	2	-.548	1	.363	2
7645	P1941	max	T	-.003	2	-.231	2	.385	1	2.105	2	.854	1
7646		min		-.149	1	-.918	1	.114	2	1.306	1	.229	2
7647		max	B	.901	1	.148	1	.376	1	.568	2	.836	1
7648		min		.218	2	.008	2	.105	2	-.25	1	.214	2
7649	P1942	max	T	.047	2	-.202	2	.157	1	.86	1	.376	1
7650		min		-.102	1	-.417	1	.124	2	-.701	2	.229	2
7651		max	B	.41	1	.104	1	.153	1	.89	2	.369	1
7652		min		.195	2	-.041	2	.118	2	-.708	1	.219	2
7653	P1943	max	T	.071	2	-.158	2	.157	1	.804	1	.311	1
7654		min		.005	1	-.308	1	.115	2	-.614	2	.204	2
7655		max	B	.305	1	-.005	1	.155	1	.977	2	.307	1
7656		min		.156	2	-.066	2	.111	2	-.763	1	.197	2
7657	P1944	max	T	.082	2	-.128	2	.137	1	.767	1	.257	1
7658		min		.036	1	-.237	1	.105	2	-.541	2	.183	2
7659		max	B	.237	1	-.036	1	.137	1	2.339	1	.257	1
7660		min		.128	2	-.077	2	.103	2	1.053	2	.18	2
7661	P1945	max	T	.068	2	-.092	2	.112	1	.712	1	.209	1
7662		min		.037	1	-.187	1	.08	2	-.49	2	.139	2
7663		max	B	.189	1	-.037	1	.113	1	2.28	1	.21	1
7664		min		.096	2	-.064	2	.08	2	1.111	2	.139	2
7665	P1945A	max	T	3.759	1	.042	2	3.317	1	.819	1	5.763	1
7666		min		1.034	2	-2.875	1	.496	2	.601	2	1.013	2
7667		max	B	3.059	1	-.852	2	3.512	1	1.903	2	6.101	1
7668		min		-.247	2	-3.966	1	.302	2	-.75	1	.759	2
7669	P1946	max	T	2.207	1	-.688	2	2.393	1	1.117	2	4.148	1

Envelope Plate/Shell Principal Stresses (Continued)

	Plate		Sur...	Sigma1 [ksi]	LC	Sigma2 [ksi]	LC	Tau Max [k...	LC	Angle [rad]	LC	Von Mises [ksi]	LC
7670		min		.056	2	-2.579	1	.372	2	.848	1	.718	2
7671		max	B	2.702	1	.031	2	2.527	1	-.35	2	4.381	1
7672		min		.56	2	-2.352	1	.265	2	-.727	1	.546	2
7673	P1947	max	T	.052	2	-.048	2	.201	1	.985	1	.527	1
7674		min		-.194	1	-.597	1	.05	2	-.448	2	.087	2
7675		max	B	.581	1	.211	1	.185	1	1.097	2	.509	1
7676		min		.044	2	-.044	2	.044	2	-.565	1	.076	2
7677	P1948	max	T	-.007	2	-.142	2	.288	1	2.319	2	.651	1
7678		min		-.131	1	-.707	1	.067	2	.957	1	.138	2
7679		max	B	.7	1	.137	1	.281	1	.77	2	.642	1
7680		min		.136	2	-.002	2	.069	2	-.598	1	.137	2
7681	P1949	max	T	.055	2	-.165	2	.141	1	.961	1	.307	1
7682		min		-.046	1	-.328	1	.11	2	-.758	2	.199	2
7683		max	B	.32	1	.046	1	.137	1	.839	2	.3	1
7684		min		.161	2	-.055	2	.108	2	-.583	1	.194	2
7685	P1950	max	T	.059	2	-.151	2	.108	1	.796	1	.202	1
7686		min		.033	1	-.184	1	.105	2	-.659	2	.187	2
7687		max	B	.179	1	-.034	1	.107	1	.937	2	.198	1
7688		min		.15	2	-.057	2	.103	2	-.759	1	.185	2
7689	P1951	max	T	.074	1	-.131	1	.103	1	.824	1	.18	1
7690		min		.06	2	-.132	2	.096	2	-.598	2	.17	2
7691		max	B	.134	2	-.057	2	.103	1	1	2	.18	1
7692		min		.13	1	-.076	1	.096	2	-.74	1	.17	2
7693	P1952	max	T	.08	1	-.099	1	.089	1	.843	1	.155	1
7694		min		.046	2	-.103	2	.075	2	-.529	2	.132	2
7695		max	B	.109	2	-.043	2	.09	1	1.076	2	.156	1
7696		min		.1	1	-.08	1	.076	2	-.73	1	.136	2
7697	P1952A	max	T	3.374	1	-1.722	2	3.503	1	2.32	2	6.069	1
7698		min		2.166	2	-3.632	1	1.944	2	2.284	1	3.375	2
7699		max	B	3.948	1	-2.589	2	3.821	1	.739	2	6.62	1
7700		min		2.157	2	-3.695	1	2.373	2	.713	1	4.116	2
7701	P1953	max	T	2.291	1	-1.292	2	2.541	1	2.339	2	4.409	1
7702		min		1.531	2	-2.792	1	1.412	2	2.295	1	2.448	2
7703		max	B	2.986	1	-1.732	2	2.735	1	.762	2	4.744	1
7704		min		1.525	2	-2.485	1	1.629	2	.727	1	2.823	2
7705	P1954	max	T	-.101	2	-.5	2	.224	1	2.205	1	.539	1
7706		min		-.152	1	-.599	1	.2	2	2.125	2	.458	2
7707		max	B	.578	1	.171	1	.204	1	.623	1	.515	1
7708		min		.487	2	.111	2	.188	2	.556	2	.442	2
7709	P1955	max	T	.04	2	-.534	2	.323	1	2.236	2	.692	1
7710		min		-.085	1	-.731	1	.287	2	2.205	1	.555	2
7711		max	B	.727	1	.093	1	.317	1	.654	2	.685	1
7712		min		.543	2	-.033	2	.288	2	.619	1	.56	2
7713	P1956	max	T	.13	2	-.319	2	.224	2	2.263	2	.4	2
7714		min		.009	1	-.345	1	.177	1	2.204	1	.349	1
7715		max	B	.337	1	-.009	1	.222	2	.671	2	.396	2
7716		min		.316	2	-.127	2	.173	1	.605	1	.341	1
7717	P1957	max	T	.175	2	-.196	1	.196	2	2.309	1	.34	2
7718		min		.088	1	-.217	2	.142	1	2.295	2	.252	1
7719		max	B	.213	2	-.089	1	.194	2	.719	1	.337	2
7720		min		.192	1	-.175	2	.141	1	.705	2	.249	1
7721	P1958	max	T	.186	2	-.144	1	.18	2	2.262	1	.313	2
7722		min		.126	1	-.175	2	.135	1	2.258	2	.234	1
7723		max	B	.171	2	-.128	1	.18	2	.68	1	.312	2
7724		min		.142	1	-.189	2	.135	1	.67	2	.235	1
7725	P1959	max	T	.157	2	-.109	1	.145	2	2.228	1	.251	2
7726		min		.122	1	-.132	2	.115	1	2.227	2	.2	1

Envelope Plate/Shell Principal Stresses (Continued)

	Plate		Sur...	Sigma1 [ksi]	LC	Sigma2 [ksi]	LC	Tau Max [k...	LC	Angle [rad]	LC	Von Mises [ksi]	LC
7727		max	B	.128	2	-.123	1	.145	2	.652	1	.252	2
7728		min		.108	1	-.162	2	.116	1	.637	2	.201	1
7729	P1959A	max	T	5.496	1	-.181	2	3.179	1	2.306	1	5.974	1
7730		min		3.443	2	-.862	1	1.812	2	-.781	2	3.537	2
7731		max	B	1.125	1	-3.827	2	3.481	1	.743	2	6.474	1
7732		min		.567	2	-5.838	1	2.197	2	.724	1	4.14	2
7733	P1960	max	T	1.798	1	-1.876	2	2.817	1	2.161	2	4.985	1
7734		min		1.155	2	-3.837	1	1.516	2	2.131	1	2.65	2
7735		max	B	3.99	1	-1.341	2	2.984	1	.595	2	5.266	1
7736		min		2.112	2	-1.979	1	1.727	2	.572	1	3.016	2
7737	P1961	max	T	-.045	2	-1.327	2	1.135	1	2.136	2	2.38	1
7738		min		-.207	1	-2.476	1	.641	2	2.119	1	1.305	2
7739		max	B	2.516	1	.261	1	1.128	1	.59	2	2.397	1
7740		min		1.403	2	.078	2	.663	2	.566	1	1.366	2
7741	P1962	max	T	.034	2	-.598	2	.413	1	2.029	2	.891	1
7742		min		-.117	1	-.944	1	.316	2	1.881	1	.616	2
7743		max	B	.928	1	.116	1	.406	1	.435	2	.876	1
7744		min		.596	2	-.033	2	.314	2	.292	1	.613	2
7745	P1963	max	T	.129	2	-.371	2	.25	2	2.289	1	.449	2
7746		min		-.034	1	-.444	1	.205	1	2.281	2	.428	1
7747		max	B	.435	1	.039	1	.242	2	.711	1	.437	2
7748		min		.363	2	-.122	2	.198	1	.7	2	.417	1
7749	P1964	max	T	.162	2	-.315	2	.238	2	2.305	1	.42	2
7750		min		.064	1	-.337	1	.2	1	2.268	2	.373	1
7751		max	B	.331	1	-.063	1	.233	2	.728	1	.411	2
7752		min		.308	2	-.159	2	.197	1	.688	2	.367	1
7753	P1965	max	T	.148	2	-.263	1	.208	2	2.312	1	.365	2
7754		min		.081	1	-.268	2	.172	1	2.253	2	.312	1
7755		max	B	.262	2	-.082	1	.205	2	.737	1	.359	2
7756		min		.261	1	-.147	2	.171	1	.673	2	.31	1
7757	P1966	max	T	.108	2	-.204	1	.16	2	2.347	1	.282	2
7758		min		.068	1	-.212	2	.136	1	2.268	2	.246	1
7759		max	B	.206	2	-.068	1	.158	2	.774	1	.278	2
7760		min		.203	1	-.11	2	.136	1	.685	2	.245	1
7761	P1966A	max	T	7.568	1	.86	1	3.354	1	2.3	1	7.176	1
7762		min		4.641	2	.739	2	1.951	2	-.777	2	4.319	2
7763		max	B	-.439	2	-4.957	2	3.621	1	.724	2	7.599	1
7764		min		-.669	1	-7.911	1	2.259	2	.711	1	4.752	2
7765	P1967	max	T	2.604	1	-1.303	2	2.592	1	2.011	2	4.489	1
7766		min		1.497	2	-2.579	1	1.4	2	1.973	1	2.427	2
7767		max	B	2.7	1	-1.668	2	2.743	1	.447	2	4.751	1
7768		min		1.512	2	-2.785	1	1.59	2	.421	1	2.755	2
7769	P1968	max	T	-.236	2	-2.041	2	1.777	1	1.518	2	3.791	1
7770		min		-.435	1	-3.99	1	.902	2	1.495	1	1.934	2
7771		max	B	3.949	1	.354	1	1.797	1	-.022	2	3.784	1
7772		min		2.078	2	.176	2	.951	2	-.05	1	1.995	2
7773	P1969	max	T	.03	2	-.152	2	.091	2	2.349	2	.289	1
7774		min		-.22	1	-.328	1	.054	1	1.262	1	.17	2
7775		max	B	.33	1	.21	1	.077	2	.786	2	.29	1
7776		min		.134	2	-.02	2	.06	1	-.358	1	.145	2
7777	P1970	max	T	.193	2	-.384	2	.289	2	2.222	2	.513	1
7778		min		.047	1	-.488	1	.267	1	2.168	1	.509	2
7779		max	B	.48	1	-.043	1	.281	2	.649	2	.503	1
7780		min		.374	2	-.188	2	.262	1	.593	1	.496	2
7781	P1971	max	T	.132	2	-.38	2	.256	2	2.191	2	.46	2
7782		min		.036	1	-.417	1	.226	1	2.176	1	.436	1
7783		max	B	.412	1	-.034	1	.25	2	.617	2	.45	2

Envelope Plate/Shell Principal Stresses (Continued)

	Plate		Sur...	Sigma1 [ksi]	LC	Sigma2 [ksi]	LC	Tau Max [k...	LC	Angle [rad]	LC	Von Mises [ksi]	LC
7784		min		.372	2	-.128	2	.223	1	.604	1	.43	1
7785	P1972	max	T	.124	2	-.31	1	.226	2	2.238	1	.404	2
7786		min		.076	1	-.327	2	.193	1	2.209	2	.354	1
7787		max	B	.321	2	-.075	1	.222	2	.668	1	.397	2
7788		min		.309	1	-.123	2	.192	1	.635	2	.352	1
7789	P1973	max	T	.08	2	-.257	1	.181	2	2.269	1	.329	2
7790		min		.055	1	-.282	2	.156	1	2.231	2	.288	1
7791		max	B	.277	2	-.055	1	.179	2	.698	1	.325	2
7792		min		.256	1	-.08	2	.156	1	.656	2	.288	1
7793	P1973A	max	T	9.461	1	2.551	1	3.455	1	2.34	2	8.478	1
7794		min		5.656	2	1.547	2	2.054	2	2.261	1	5.063	2
7795		max	B	-1.344	2	-5.887	2	3.686	1	.688	2	8.835	1
7796		min		-2.422	1	-9.793	1	2.271	2	.671	1	5.343	2
7797	P1974	max	T	2.939	1	-.64	2	2.046	1	1.965	2	3.655	1
7798		min		1.576	2	-1.154	1	1.108	2	1.871	1	1.975	2
7799		max	B	1.225	1	-1.744	2	2.177	1	.383	2	3.888	1
7800		min		.81	2	-3.128	1	1.277	2	.326	1	2.26	2
7801	P1975	max	T	-1.036	2	-4.111	2	2.9	1	1.522	2	6.843	1
7802		min		-1.747	1	-7.548	1	1.537	2	1.493	1	3.704	2
7803		max	B	7.494	1	1.73	1	2.882	1	-.019	2	6.796	1
7804		min		4.216	2	1.027	2	1.595	2	-.051	1	3.808	2
7805	P1976	max	T	.659	2	-.042	2	.35	2	-.544	2	.681	2
7806		min		.557	1	-.135	1	.346	1	-.594	1	.635	1
7807		max	B	.124	1	-.539	1	.347	2	1.039	2	.679	2
7808		min		.03	2	-.663	2	.332	1	.992	1	.611	1
7809	P1977	max	T	.053	2	-.511	2	.317	1	2.065	2	.696	1
7810		min		-.11	1	-.744	1	.282	2	1.87	1	.54	2
7811		max	B	.734	1	.115	1	.309	1	.488	2	.684	1
7812		min		.505	2	-.048	2	.276	2	.294	1	.53	2
7813	P1978	max	T	.158	2	-.314	1	.247	2	2.203	2	.437	2
7814		min		.104	1	-.336	2	.209	1	2.099	1	.377	1
7815		max	B	.326	2	-.101	1	.241	2	.637	2	.426	2
7816		min		.309	1	-.155	2	.205	1	.536	1	.37	1
7817	P1979	max	T	.102	1	-.328	1	.237	2	2.161	2	.441	2
7818		min		.075	2	-.398	2	.215	1	2.056	1	.389	1
7819		max	B	.393	2	-.074	2	.234	2	.593	2	.435	2
7820		min		.328	1	-.102	1	.215	1	.491	1	.389	1
7821	P1980	max	T	.065	1	-.24	1	.205	2	2.219	2	.388	2
7822		min		.047	2	-.362	2	.153	1	2.086	1	.279	1
7823		max	B	.36	2	-.047	2	.204	2	.648	2	.386	2
7824		min		.241	1	-.066	1	.154	1	.516	1	.28	1
7825	P1980A	max	T	10.941	1	3.887	1	3.527	1	2.297	2	9.606	1
7826		min		6.326	2	2.068	2	2.129	2	2.196	1	5.587	2
7827		max	B	-1.973	2	-6.472	2	3.72	1	.639	2	9.918	1
7828		min		-3.821	1	-11.261	1	2.249	2	.605	1	5.745	2
7829	P1981	max	T	2.967	1	.651	1	1.158	1	1.995	2	2.701	1
7830		min		1.46	2	.221	2	.619	2	1.698	1	1.363	2
7831		max	B	-.069	2	-1.605	2	1.265	1	.368	2	2.884	1
7832		min		-.612	1	-3.141	1	.768	2	.177	1	1.572	2
7833	P1982	max	T	-.839	2	-3.026	2	2.022	1	1.614	2	4.665	1
7834		min		-1.062	1	-5.105	1	1.093	2	1.468	1	2.706	2
7835		max	B	5.056	1	1.029	1	2.014	1	.065	2	4.628	1
7836		min		3.127	2	.784	2	1.172	2	-.069	1	2.818	2
7837	P1983	max	T	-.565	2	-1.897	2	1.181	1	1.59	2	2.974	1
7838		min		-.978	1	-3.34	1	.666	2	1.501	1	1.687	2
7839		max	B	3.321	1	.983	1	1.169	1	.035	2	2.954	1
7840		min		1.928	2	.574	2	.677	2	-.046	1	1.715	2

Envelope Plate/Shell Principal Stresses (Continued)

	Plate		Sur...	Sigma1 [ksi]	LC	Sigma2 [ksi]	LC	Tau Max [k...	LC	Angle [rad]	LC	Von Mises [ksi]	LC
7841	P1984	max	T	.647	2	.162	1	.284	2	-.381	2	.611	2
7842		min		.374	1	.078	2	.106	1	-.431	1	.325	1
7843		max	B	-.091	2	-.375	1	.283	2	1.212	2	.617	2
7844		min		-.171	1	-.658	2	.102	1	1.199	1	.325	1
7845	P1985	max	T	.162	1	-.385	1	.274	1	2.237	2	.525	2
7846		min		.019	2	-.515	2	.267	2	1.905	1	.487	1
7847		max	B	.509	2	-.019	2	.265	1	.68	2	.518	2
7848		min		.379	1	-.152	1	.264	2	.346	1	.473	1
7849	P1986	max	T	.173	1	-.214	1	.278	2	2.296	2	.535	2
7850		min		.045	2	-.511	2	.194	1	1.858	1	.336	1
7851		max	B	.512	2	-.047	2	.279	2	.73	2	.537	2
7852		min		.219	1	-.169	1	.194	1	.298	1	.337	1
7853	P1987	max	T	.079	1	-.216	1	.287	2	2.251	2	.569	2
7854		min		.009	2	-.564	2	.147	1	1.868	1	.264	1
7855		max	B	.565	2	-.01	2	.287	2	.681	2	.57	2
7856		min		.218	1	-.079	1	.149	1	.298	1	.267	1
7857	P1987A	max	T	11.911	1	5.039	1	3.436	1	2.246	2	10.356	1
7858		min		6.596	2	2.41	2	2.093	2	2.112	1	5.781	2
7859		max	B	-2.414	2	-6.655	2	3.597	1	.584	2	10.635	1
7860		min		-5.021	1	-12.216	1	2.121	2	.522	1	5.835	2
7861	P1988	max	T	3.314	1	1.866	1	.724	1	2.192	2	2.877	1
7862		min		1.541	2	.612	2	.465	2	1.452	1	1.344	2
7863		max	B	-.546	2	-1.616	2	.796	1	.478	2	3.003	1
7864		min		-1.872	1	-3.464	1	.535	2	-.033	1	1.424	2
7865	P1989	max	T	.942	1	-.684	2	1.084	1	1.601	2	1.883	1
7866		min		-.192	2	-1.227	1	.246	2	1.027	1	.611	2
7867		max	B	1.111	1	.122	2	1.012	1	.058	2	1.755	1
7868		min		.772	2	-.912	1	.325	2	-.498	1	.719	2
7869	P1990	max	T	-.906	1	-3.154	2	1.631	1	1.554	2	3.798	1
7870		min		-1.244	2	-4.169	1	.955	2	1.231	1	2.752	2
7871		max	B	4.093	1	1.224	2	1.584	1	-.002	2	3.718	1
7872		min		3.216	2	.924	1	.996	2	-.309	1	2.812	2
7873	P1991	max	T	-.482	2	-1.65	2	.707	1	1.499	2	1.8	1
7874		min		-.613	1	-2.026	1	.584	2	1.349	1	1.469	2
7875		max	B	1.992	1	.6	1	.696	1	-.067	2	1.77	1
7876		min		1.659	2	.478	2	.591	2	-.196	1	1.48	2
7877	P1992	max	T	.882	1	.374	1	.717	2	-.451	2	1.242	2
7878		min		.696	2	-.737	2	.254	1	-.769	1	.767	1
7879		max	B	.751	2	-.716	2	.734	2	1.127	2	1.271	2
7880		min		-.343	1	-.862	1	.26	1	.865	1	.752	1
7881	P1993	max	T	.151	1	-.329	1	.515	2	2.211	2	1.046	2
7882		min		-.032	2	-1.061	2	.24	1	1.724	1	.425	1
7883		max	B	1.067	2	.032	2	.518	2	.642	2	1.052	2
7884		min		.332	1	-.132	1	.232	1	.174	1	.414	1
7885	P1994	max	T	.051	1	-.218	1	.432	2	2.201	2	.871	2
7886		min		-.013	2	-.878	2	.135	1	1.74	1	.248	1
7887		max	B	.881	2	.013	2	.434	2	.63	2	.874	2
7888		min		.223	1	-.046	1	.134	1	.185	1	.249	1
7889	P1994A	max	T	12.382	1	5.661	1	3.361	1	2.168	2	10.737	1
7890		min		6.422	2	2.388	2	2.017	2	1.986	1	5.622	2
7891		max	B	-2.467	2	-6.416	2	3.505	1	.503	2	11.001	1
7892		min		-5.67	1	-12.68	1	1.974	2	.398	1	5.605	2
7893	P1995	max	T	4.056	1	3.351	1	.593	2	.849	1	3.753	1
7894		min		2.113	2	.927	2	.353	1	-.616	2	1.834	2
7895		max	B	-1.023	2	-2.041	2	.509	2	.842	2	3.826	1
7896		min		-3.478	1	-4.098	1	.31	1	-.522	1	1.767	2
7897	P1996	max	T	1.861	1	-.28	1	1.07	1	.719	1	2.015	1