6018098

MECHANICAL SITE UTILITIES

B-595-C-A160

SPECIFICATIONS

BEST AVAILABLE COPY

JAN 1992
RECEIVED
EDMC

HANFORD WASTE VITRIFICATION PLANT

U.S. DEPARTMENT OF ENERGY
RICHLAND OPERATIONS OFFICE

FLUOR DANIEL
ADVANCED TECHNOLOGY DIVISION
CONTRACT 8457

DOE CONTRACT NO.
DE-AC06-86RL10838

THIS PAGE INTENTIONALLY
LEFT BLANK

U.S. DEPARTMENT OF ENERGY
Hanford Waste Vitrification Plant
Richland, Washington
DOE Contract DE-AC06-86RL10838

FLUOR DANIEL, INC.
Advanced Technology Division
Fluor Contract 8457

MECHANICAL SITE UTILITIES SPECIFICATION B-595-C-A160

"APPROVED FOR CONSTRUCTION"

REVISION NO. 0
SAFETY CLASS 4*
ISSUE DATE

*Unless otherwise noted

THIS PAGE INTENTIONALLY LEFT BLANK

APPROVED BY:

E. R. Jacobs	Project Package Engineer	12-17-91 Date
J. L. Smets	Baseline Engineering Manager	12-19-91 Date
E. R. Phillips	Systems Engineering Manager	12-17-91 Date
A. K. Yee	Independent Safety Manager	12/19/91 Date
J. G. Kelly	Q. A. Manager	12/18/91 Date
R. N. Gibbons	Project Director	12/19/91 Date

THIS PAGE INTENTIONALLY
LEFT BLANK

MECHANICAL SITE UTILITIES
(B-595-C-A160)

TABLE OF CONTENTS
TECHNICAL SPECIFICATIONS

DIVISION 1 - GENERAL REQUIREMENTS

Section	Title
01730	Operation and Maintenance Data

DIVISION 2 - SITE WORK

Section	Title
02220	Excavation and Backfill
02730	Sanitary Sewer System
02830	Steel Chain Link Fence

DIVISION 3 - CONCRETE

Section	Title
03300	Concrete Construction

DIVISION 5 - METALS

Section	Title
05060	Welding Structural
05061	Welding Tanks
05062	Welding Piping
05063	Welding Pressure Vessels
05120	Structural Steel

THIS PAGE INTENTIONALLY LEFT BLANK

THIS PAGE INTENTIONALLY
LEFT BLANK

DIVISION 9 - FINISHES

Section	Title
09900	Painting

DIVISION 13 - SPECIAL CONSTRUCTION

Section	Title
13120	Building Accessories
13411	Field Erected Steel Storage Tank

DIVISION 15 - MECHANICAL

Section	Title
15061	Piping Material, Fabrication, Erection and Pressure Testing (Carbon Steel, Iron and nonmetallic)
15061A	Design Specification for Safety Related Carbon Steel Valves
15145	Sump Pumps
15250	Mechanical Insulation
15501	Automatic Wet Pipe Sprinkler Systems
15505	Fire Water Unit Tank Heater
15540	Fire Water System Pumps
15541	Fire Water Unit Heater Pump

DIVISION 16 - ELECTRICAL

Section	Title
16100	Electrical Installation
16110	Electrical Materials and Devices
16111	Conduit/Cable Schedule
16150	Motors - Induction
16905	Electrical Testing

THIS PAGE INTENTIONALLY
LEFT BLANK

DIVISION 17 - CONTROLS AND INSTRUMENTATION

Section	Title
17703	Instrument Piping MaterialS
17704	Instrument Installation
17705	Instrument Checkout and Calibration
17708	Instrument Piping Pressure Testing
17801	Mechanical Site Utilities Instrumentation

THIS PAGE INTENTIONALLY LEFT BLANK

9 2 1 2 4 1 3 0 1 9 2

THIS PAGE INTENTIONALLY
LEFT BLANK

SECTION 01730
OPERATION AND MAINTENANCE DATA

PART 1 GENERAL

1.1 SUBMISSION OF OPERATION AND MAINTENANCE DATA

Submit operation and maintenance (O&M) data which is specifically applicable to this contract and a complete and concise depiction of the provided equipment or product. Data containing extraneous information to be sorted through to find applicable instructions will not be accepted. Present information in sufficient detail to clearly explain user O&M requirements at the system, equipment, component, and subassembly level. Include an index preceding each submittal. Submit the following in accordance with the Vendor Drawing and Data Requirements section of the Order/ Subcontract.

1.1.1 Package Content

For each product, system, or piece of equipment requiring submission of O&M data, submit the package required in the individual technical section. Package content shall be as required in the Paragraph 1.3, "Schedule of Operations and Maintenance Data Packages."

1.2 TYPES OF INFORMATION REQUIRED IN O&M DATA PACKAGES

1.2.1 Operating Instructions

Include specific instructions, procedures, and illustrations for the following phases of operation:

1.2.1.1 Safety Precautions

List personnel hazards and equipment or product safety precautions for all operating conditions.

1.2.1.2 Operator Prestart

Include requirements to set up and prepare each system for use.

1.2.1.3 Start-Up, Shutdown, and Post-Shutdown Procedures

Include a control sequence for each of these operations.

1.2.1.4 Normal Operations

Include control diagrams with data to explain operation and control of systems and specific equipment.

1.2.1.5 Emergency Operations

Include emergency procedures for equipment malfunctions to permit a short period of continued operation or to shut down the equipment to prevent further damage to systems and equipment. Include emergency shutdown instructions for fire, explosion, spills, or other foreseeable contingencies. Provide guidance on emergency operations of all utility systems including valve locations and portions of systems controlled.

1.2.1.6 Operator Service Requirements

Include instructions for services to be performed by the operator such as lubrication, adjustments, and inspection.

1.2.1.7 Environmental Conditions

Include a list of environmental conditions (temperature, humidity, and other relevant data) which are best suited for each product or piece of equipment and describe conditions under which equipment should not be allowed to run.

1.2.2 Preventive Maintenance

Include the following information for preventive and scheduled maintenance to minimize corrective maintenance and repair.

1.2.2.1 Lubrication Data

Include lubrication data, other than instructions for lubrication in accordance with Paragraph 1.2.1.6, Operator Service Requirements.

1.2.2.2 Preventive Maintenance Plan and Schedule

Include manufacturer's schedule for routine preventive maintenance, inspections, tests and adjustments required to ensure proper and economical operation and to minimize corrective maintenance and repair. Provide manufacturer's projection of preventive maintenance man-hours on a daily, weekly, monthly, and annual basis.

1.2.3 Corrective Maintenance

Include manufacturer's recommendations on procedures and instructions for correcting problems and making repairs.

1.2.3.1 Troubleshooting Guides and Diagnostic Techniques

Include step-by-step procedures to promptly isolate the cause of typical malfunctions. Describe clearly why the checkout is

performed and what conditions are to be sought. Identify tests or inspections and test equipment required to determine whether parts and equipment may be reused or require replacement.

1.2.3.2 Wiring Diagrams and Control Diagrams

Wiring diagrams and control diagrams shall be point-to-point drawings of wiring and control circuits including factory-field interfaces. Provide a complete and accurate depiction of the actual job specific wiring and control work. On diagrams number electrical and electronic wiring and pneumatic control tubing and the terminals for each type, identically to actual installation numbering.

1.2.3.3 Maintenance and Repair Procedures

Include instructions and list tools required to restore product or equipment to proper condition or operating standards.

1.2.3.4 Removal and Replacement Instructions

Include step-by-step procedures and list required tools and supplies for removal, replacement, disassembly, and assembly of components, assemblies, subassemblies, accessories, and attachments. Provide tolerances, dimensions, settings and adjustments required. Instructions shall include a combination of text and illustrations.

1.2.3.5 Spare Parts and Supply Lists

Include lists of spare parts and supplies required for maintenance and repair to ensure continued service or operation without unreasonable delays.

1.2.3.6 Corrective Maintenance Man-Hours

Include manufacturer's projection of corrective maintenance man-hours. Corrective maintenance that requires participation of the equipment manufacturer shall be identified and tabulated separately.

1.2.4 Appendices

Provide information specified in the preceding paragraphs pertinent to the maintenance or operation of the product or equipment. Include the following:

1.2.4.1 Parts Identification

Provide identification and coverage for all parts of each component, assembly, subassembly, and accessory of the end items

subject to replacement. Include special hardware requirements, such as requirement to use high-strength bolts and nuts. Identify parts by make, model, serial number, and source of supply to allow reordering without further identification. Provide clear and legible illustrations, drawings, and exploded views to enable easy identification of the items. When illustrations omit the part numbers and description, both the illustrations and separate listing shall show the index, reference, or key number which will cross-reference the illustrated part to the listed part. Parts shown in the listings shall be grouped by components, assemblies, and subassemblies.

A. Manufacturer's Standard Commercial Practice: The parts data may cover more than one model or series of equipment, components, assemblies, subassemblies, attachments, or accessories, such as a master parts catalog, in accordance with the manufacturer's standard commercial practice.

B. Other Than Manufacturer's Standard Commercial Practice (MSCP): End item manufacturer may add a cross-reference to implement components' assemblies and parts requirements when implementation in manual form varies significantly from the style, format, and method of manufacturer's standard commercial practice. Use the format in the following example:

End Item Manufacturer's Alphanumeric Sequence	Actual Manufacturer's Name and MSCP	Actual Manufacturer Part No.
100001	John Doe & Co. 00000	2000002

1.2.4.2 Warranty Information

List and explain the various warranties and include the servicing and technical precautions prescribed by the manufacturers or contract documents to keep warranties in force.

1.2.4.3 Personnel Training Requirements

Provide information available from the manufacturers to use in training designated personnel to operate and maintain the equipment and systems properly.

1.2.4.4 Testing Equipment and Special Tool Information

Include information on test equipment required to perform specified tests and on special tools needed for the operation, maintenance, and repair of components.

1.3 SCHEDULE OF OPERATION AND MAINTENANCE DATA PACKAGES

Furnish the O&M data packages specified in individual technical sections. The required information for each O&M data package is as follows:

1.3.1 Data Package

A. Operating instructions

B. Safety precautions

C. Operation prestart

D. Start-up, shutdown, and post shutdown

E. Normal operations

F. Emergency operations

G. Operator Service Requirements

H. Environmental conditions

I. Preventative maintenance

J. Lubrication data

K. Preventive maintenance plan and schedule

L. Corrective maintenance

M. Troubleshooting guides and diagnostic techniques

N. Wiring diagrams and control diagrams

O. Maintenance and repair procedures and manhour requirements

P. Removal and replacement instructions

Q. Spare parts and supply list

R. Parts identification

S. Warranty information

T. Personnel training requirements

U. Testing equipment and special tool information

PART 2 PRODUCTS

(Not Used)

PART 3 EXECUTION

(Not Used)

END OF SECTION

9212413019 8

SECTION 02220
EXCAVATION AND BACKFILL
(SAFETY CLASS 3, RATED FOR SAFETY CLASS 1 DBE)

PART 1 GENERAL

1.1 SUMMARY

This section covers the technical requirements for excavation, backfill and compaction for the installation of slabs at grade, foundations, drilled foundations, underground utilities and appurtenances and the septic system as shown on the Contract Drawings.

1.2 REFERENCES

The publications listed below form a part of this section to the extent referenced. The publications are referred to in the text by the basic designation only.

AMERICAN SOCIETY FOR TESTING AND MATERIALS (ASTM)

ASTM D1556	1982 Standard Test Method for Density of Soil in Place by the Sand-Cone Method
ASTM D1557	1978 Standard Test Methods for Moisture-Density Relations of Soils and Soil-Aggregate Mixtures Using 10 pound (4.54 kg) Rammer and 18 inch (457 mm) Drop
ASTM D2167	1984 Standard Test Method for Density and Unit Weight of Soil In-Place by the Rubber Balloon Method
ASTM D2922	1981 Standard Test Methods for Density of Soil and Soil-Aggregate in Place by Nuclear Methods (Shallow Depth)

WASHINGTON ADMINISTRATIVE CODE (WAC)

WAC	Chapter 296-155, Section 650-664, Excavation, Trenching and Shoring

1.3 RELATED REQUIREMENTS

Specification Section 02730	Sanitary Sewer System
Specification Section 16100	Electrical Installation

1.4 **SUBMITTALS**

Submittals by the Seller are not required for this specification section. The Buyer shall ensure the following information is provided to the Project:

1.4.1 Documentation providing the moisture density relationships, as specified in Paragraph 3.2.2.5A, for each type of soil used for backfill.

1.4.2 Documentation of field density tests, as specified in Paragraph 3.3, including the location and depth of each sample tested.

PART 2 PRODUCTS

2.1 **MATERIALS AND EQUIPMENT**

2.1.1 Backfill Material

2.1.1.1 Backfill materials shall be the originally excavated onsite material or imported granular material, unless such material is determined to be unsuitable due to presence of vegetation, excessive moisture, refuse or other deleterious substances.

2.1.1.2 Sand used for backfill shall be a natural sand, graded from fine to coarse, not lumpy or frozen, with 100 percent passing a No. 4 sieve and 0 to 5 percent passing a No. 200 sieve. The sand shall be free from organic material, slag, cinders, ashes, and other refuse.

2.1.1.3 Fine gravel used for backfill shall be a natural gravel having particles in a reasonable uniform combination with 100 percent passing a 3/4 inch sieve and 0 to 5 percent passing a No. 4 sieve. The gravel shall be free from organic material, slag, cinders, ashes, and other refuse.

2.1.1.4 Notwithstanding the above requirements, gradation and particle size of imported granular fill material shall be controlled such that the laboratory and field testing required under Paragraphs 3.2.2.5A and 3.3 herein can be performed in accordance with the specified ASTM test methods.

9 2 1 2 4 1 3 0 2 0 0

PART 3 EXECUTION

3.1 PREPARATION

3.1.1 Prior to Excavation

A. Obtain permission to excavate from the Buyer.

B. Determine the lines, grades and elevations for the installation of slabs at grade, foundations, drilled foundations, underground utilities and appurtenances as shown on the Contract Drawings.

C. Determine the depth of excavation required for the installation of foundations, drilled foundations, underground utilities and appurtenances as shown on the Contract Drawings.

D. Supply and set stakes to provide strict and accurate vertical and horizontal control of the work from monuments and benchmarks provided by the Buyer.

E. Locate and identify all underground utilities and tie-in points within the work area.

F. Grade the top perimeter of the excavation to prevent surface water from draining into the excavation.

3.1.2 Prior to Backfilling

A. Obtain permission to backfill from the Buyer.

B. All excavations shall be cleaned of trash and debris.

C. All exposed and excavated surfaces shall be compacted with machine or hand operated compactors to not less than 95 percent of its maximum dry density as determined by ASTM D1557. A minimum of four passes shall be made before testing the compaction.

D. At locations beneath slabs at grade, foundations and appurtenances do not begin backfill operations until after the subgrade has been inspected and approved by the Buyer.

E. Backfilling operations over foundations and appurtenances may not begin until the below grade construction has been inspected and accepted by the Buyer.

F. Backfilling operations over foundations and appurtenances may not begin until the concrete has cured for at least

7 days and the forms have been removed. In addition, do not backfill against subsurface concrete walls until the walls have reached their specified 28 day compressive strength as demonstrated by compression testing of molded concrete cylinders.

G. Backfilling operations for utility trenches shall not begin until the installed utilities have undergone all required tests and inspections and have been accepted by the Buyer.

3.2 INSTALLATION, APPLICATION AND ERECTION

3.2.1 Excavation

3.2.1.1 General

A. All excavations shall be in accordance with Washington Administrative Code (WAC), Chapter 296-155, Section 650-664, "Excavation Trenching and Shoring" and other applicable federal, state and local safety regulations. The side slopes at all excavations shall not be steeper than 1.8 horizontal to 1 vertical unless shoring is provided.

B. Excavation shall be by the open-cut method. Precautions shall be taken not to damage the existing underground utilities.

C. Keep all excavations free of water, ice, and debris.

D. An imaginary 45° line extending downward and outward from the bottom corner of any existing foundation shall not intersect any intended excavation for adjacent foundations or utilities, unless noted otherwise on the Contract Drawings.

E. When freezing temperatures are expected, do not excavate to the full depth indicated on the Contract Drawings unless the bottom of the excavation is adequately protected from frost.

F. Excess excavated material meeting the requirements of Paragraph 2.1.1.1 shall be stockpiled at a location designated by the Buyer for later use as backfill material.

Material excavated for the installation of underground utilities which have been determined suitable for backfill may be stockpiled in an orderly manner at a distance from the banks of the trench equal to 1/2 the depth of the excavation, but no closer than 2 feet.

G. Surplus material and material determined to be unsuitable for backfill shall be disposed in an area designated by the Buyer.

3.2.1.2 Excavation for Foundations and Slabs at Grade

A. Requirements specified in Paragraph 3.2.1.1 herein shall apply. Additional requirements shall be as specified below.

B. The excavation shall be made to the size and depth required to install the concrete foundations and slabs at grade to the lines and elevations shown on the Contract Drawings. For building foundations and floor slabs, excavate the entire area to bottom of foundations and compact the exposed surface in accordance with Paragraph 3.1.2C prior to construction of foundations and backfilling.

C. The excavation shall extend a sufficient distance from concrete walls and footings to allow the placement and removal of forms and inspection, except where the concrete is to be deposited directly against excavated surfaces or shoring.

3.2.1.3 Excavation for Appurtenances

A. Requirements specified in Paragraph 3.2.1.1 herein shall apply. Additional requirements shall be as specified hereinafter.

B. Excavations for precast manholes, flange boxes and other appurtenances shall be of sufficient width and depth to install these items as shown on the Contract Drawings.

The depth of the excavation shall be such so as to allow the placement of 6 inches of compacted sand below the bottom of the precast manholes and flange boxes.

C. Compact the bottom of the excavation in accordance with Paragraph 3.1.2.C.

3.2.1.4 Excavation for Utility Trenches

A. Requirements specified in Paragraph 3.2.1.1 herein shall apply. Additional requirements shall be as specified below.

B. Excavate trenches to a width and depth required to install underground utilities as shown on the Contract Drawings.

C. Accurately grade the bottoms of trenches to provide uniform bearing and support for underground utilities and compact in accordance with Paragraph 3.1.2.C, except where it is necessary to excavate holes for bell or for proper sealing of joints. Excavate pipe trenches to at least 3 inches and not more than 6 inches below the bottom of pipe elevation.

D. The pipe bed shall be rounded so that at least the bottom quadrant of the pipe shall rest firmly for the full length of the barrel as proper pipe jointing operations will permit.

3.2.1.5 Drilled Pier Foundations

Drill holes for piers to the diameter and depth shown on the Contract Drawings. Bottom of holes shall be level and free of loose material. Provide casing as required to prevent caving or sloughing during construction. Holes shall not be out of plumb by more than 1-1/2 inches in full depth.

3.2.1.6 Dewatering

A. Excavate in such a manner that the work area will be effectively drained. Drainage shall be by gravity whenever possible; utilize additional means when necessary, including pumping and bailing.

B. Divert and/or pump out, bail or otherwise remove any water which may accumulate in the excavations, and perform all necessary work to keep them free from water while construction under this contract is being completed.

C. Obtain approval from the Buyer for discharge of water removed by any means.

3.2.2 Backfilling

3.2.2.1 General

A. Backfill material shall meet the requirements specified in Paragraph 2.1.1 herein.

B. Jetting of backfill is not permitted.

C. Backfill material shall be placed in maximum loose lifts of 8 inches and compacted in accordance with Paragraph 3.2.2.5B.

D. Backfill material shall be moisture conditioned to within plus or minus 2 percent of its optimum moisture content as determined in Paragraph 3.2.2.5A. Disking may be required to obtain the required moisture content since water applied to the surface will not penetrate the full depth of the lift.

E. Do not operate heavy equipment for spreading and compacting backfill within 5 feet of below-grade walls. The fill within this 5 foot strip shall be placed in maximum loose lifts of 6 inches and be compacted with a vibrating plate compactor, or drum compactor with a total static weight not exceeding 3000 pounds.

F. Backfill shall be placed to the lines and contours matching the adjacent grade.

3.2.2.2 Backfilling for Foundations, Slabs at Grade and Appurtenances

A. Requirements specified in Paragraph 3.2.2.1 herein shall apply.

B. Proof roll all surfaces beneath slabs at grade.

C. Place sand meeting the requirements of Paragraph 2.1.1.2 under all precast manholes and flange boxes and compact to a minimum thickness of 6 inches in accordance with Paragraph 3.2.2.5B.

3.2.2.3 Backfilling of Utility Trenches

A. Requirements specified in Paragraph 3.2.2.1 herein shall apply. Additional requirements shall be as specified below:

B. Where utilities are coated for protection against corrosion, perform backfilling and tamping in such a manner that the coating will not be damaged.

C. Direct burial cables shall be bedded in a cushion of sand not less than 3 inches on all sides. Direct burial conduit shall be buried directly in earth. Other utilities shall be bedded in 3 inches of sand.

D. From the top of the bedding material to a depth of not less than two feet over sewers, direct burial wires, conduit, cables and underground piping; and not less than one foot over other utilities, backfill in maximum loose lifts of

6 inches and compact in accordance with Paragraph 3.2.2.5B. Compaction shall be achieved through the use of hand tamping or a power operated hand vibrating compactor such as a vibrating plate compactor or drum compactor with a total static weight not exceeding 3000 pounds.

E. Deposit backfill material in the trench for its full width on each side of the underground utilities and appurtenances simultaneously. Use special care in placing this portion of the backfill, so as to avoid damage or movement of the utility.

F. When pressure testing of underground pipe is required the trench shall not be backfilled to more than 2 feet above the top of pipe until the pressure tests have been performed. The joints and couplings shall be left uncovered during the pressure test. Upon the satisfactory completion of the test backfill operations may resume.

G. Place markers and wood boards over underground utilities per Specification Section 16100, Electrical Installation and as shown on the Contract Drawings.

H. Place the remainder of the backfill material in maximum loose lifts of 8 inches and compact in accordance with Paragraph 3.2.2.5B.

3.2.2.4 Backfilling over the Leach Field

Install and compact the filter material in accordance with Specification Section 02730.

Backfill over the filter material in maximum loose lifts of 12 inches and compact with four passes of a light plate or roller compactor. Care shall be taken so as not to densify the underlying filter material or damage the underground lines.

Replace the crushed rock surfacing and compact with one pass in each direction of a light plate or roller compactor.

3.2.2.5 Compaction of Backfill

A. The moisture density relationship, as determined in accordance with ASTM D1557, shall be developed by the Buyer for each type of soil used for backfill. The optimum moisture content for the onsite soil is estimated to be 10 percent.

B. Compact each lift to 90 percent of its maximum dry density as determined in Paragraph 3.2.2.5A in all areas except, backfill placed under foundations and slabs at grade shall be compacted to 95 percent of its maximum dry density.

Compact the crushed rock surfacing by at least two passes of a vibratory roller approved by the Buyer.

3.2.3 Tolerances

All excavation and backfill shall be made to the dimensions and elevations shown or the Contract Drawings plus or minus 1 inch.

3.3 **FIELD QUALITY CONTROL**

3.3.1 The Buyer will be responsible for field tests to determine that the work is performed in accordance with this specification. The Seller shall support and coordinate its work with Buyer's testing activities.

3.3.2 Field density tests shall be performed in accordance with ASTM D1556, ASTM D2167 or ASTM D2922. When tests are performed by the Nuclear Method per ASTM D2922, at least 20 percent of the tests shall be with ASTM D1556 or ASTM D2167 methods.

3.3.3 Field density tests are required for each method of compaction utilized, for each type of backfill material used.

3.3.4 The minimum number of field density tests shall be as follows:

A. Below foundations, underground structures and slabs at grade; 1 test, per lift, per 1500 square feet of area with a minimum of one test at each installation.

B. Over and adjacent to foundations, underground structures and slabs at grade; 1 test, per lift, per 3000 square feet of area with a minimum of one test at each installation.

C. Trenches; 1 test, per lift, per 200 lineal feet of trench.

3.3.5 Any areas failing to meet compaction requirements shall be recompacted and retested. If required compaction cannot be obtained, the material shall be removed, replaced, recompacted and tested.

END OF SECTION

THIS PAGE INTENTIONALLY
LEFT BLANK

SECTION 02730
SANITARY SEWER SYSTEM

PART 1 GENERAL

1.1 SUMMARY

This section covers the technical requirements for the furnishing, installing, inspection and testing of the exterior sanitary sewer, septic and leach field system and appurtenances as shown on the Contract Drawings.

1.2 REFERENCES

The publications listed below form a part of this section to the extent referenced. The publications are referred to in the text by the basic designation only.

AMERICAN CONCRETE INSTITUTE (ACI)

ACI 318	1989 Building Code Requirements for Reinforced Concrete

AMERICAN SOCIETY FOR TESTING AND MATERIALS (ASTM)

ASTM A36	1989 Standard Specification for Structural Steel
ASTM A48	1983 Standard Specification for Grey Iron Castings
ASTM A123	1989 Standard Specification for Zinc (Hot Dip Galvanized) Coating on Iron and Steel Products
ASTM A760	1990 Corrugated Steel Pipe, Metallic Coated for Sewers and Drains
ASTM C478	1988 (Rev. A) Standard Specification for Precast Reinforced Concrete Manhole Sections
ASTM C969	1982 (R 1990) Standard Practice for Infiltration and Exfiltration Acceptance Testing of Installed Precast Concrete Pipe Sewer Lines

ASTM D1785	1989 Standard Specification for Poly Vinyl Chloride (PVC) Plastic Pipe Schedules 40, 80 and 120
ASTM D2412	1987 Standard Test Method for Determination of External Loading Characteristics of Plastic Pipe by Parallel-Plane Loading
ASTM D3034	1989 Standard Specification for Type PSM Poly (Vinyl Chloride) (PVC) Sewer Pipe and Fittings
ASTM D3212	1989 Standard Specification for Joints for Drain and Sewer Plastic Pipes Using Flexible Elastomeric Seals
ASTM F477	1976 (R 1985) Standard Specification for Elastomeric Seals (Gaskets) for Joining Plastic Pipe

UNI-BELL PLASTIC PIPE ASSOCIATION (UBPPA)

UBPPA UNI-B-3	1988 Installation of Polyvinyl Chloride (PVC) Pressure Pipe
UBPPA UNI-B-5	1982 Installation of Polyvinyl Chloride (PVC) Sewer Pipe

1.3 RELATED REQUIREMENTS

Specification Section 02220 Excavation and Backfill

Specification Section 03300 Concrete Construction

1.4 SYSTEM DESCRIPTION

The gravity sanitary sewer system consists of gravity feed lines and associated appurtenances which collect and transport sanitary waste from the various buildings and construction facilities to a septic tank. The septic system consists of septic tank, dosing tank with dual siphons, transport line, manifold, laterals and leach fields. The septic tank enables retention of solids and anaerobic decomposition. The dosing tank with siphons transport a specific volume of effluent from the septic tank to the distribution network. The leach field allows the septic tank effluent to drain into the native soil where soil microorganisms provide further treatment of the wastes.

1.5 **SUBMITTALS**

Submit the following in accordance with the Vendor Drawing and Data Requirements section of the Order/Subcontract.

1.5.1 Manufacturer's standard drawings or catalog cuts and data.

A. Fittings, joints and couplings

B. Manhole covers and frames

C. Precast concrete manholes

D. Metal work

E. Siphons

1.5.2 Certificates of Compliance for the following:

A. Pipe and fittings

B. Pipe joint materials

C. Manhole frames and covers

D. Precast concrete manhole sections

E. Siphons

F. Certificates shall attest that tests set forth in each applicable referenced publication have been performed, whether specified in that publication to be mandatory or otherwise. Production control tests shall have been performed at the intervals or frequency specified in the referenced publication. Other tests shall have been performed within three years of the date of submittal of certificates on the same type, class, grade, and size of material as is being provided for the project.

1.5.3 Submit field inspection and tests reports.

PART 2 PRODUCTS

2.1 MATERIALS AND EQUIPMENT

2.1.1 PVC Sewer Pipe and Fittings

PVC sewer pipe and fittings shall conform to ASTM D3034 and minimum wall thickness for SDR 35 in Table 1. Joints shall conform to ASTM D3212 and gaskets shall conform to ASTM F477.

2.1.2 CMP Casing

Where pipeline passes under the railroad, it shall be encased in a galvanized nestable corrugated metal pipe conforming to ASTM A760, Type I. The encasement pipe shall be 14 gauge thick and diameter a minimum of 2 inches larger than the encased pipe. The length of encasement shall be as shown on Contract Drawings. Connections shall be bonded not welded.

2.1.3 Concrete Materials

Concrete materials shall be as specified in Section 03300, Concrete Construction. Concrete shall have a 28-day minimum compressive strength of 4000 psi.

2.1.4 Precast concrete and Manholes

2.1.4.1 Concrete manholes shall consist of precast risers and tops conforming to ASTM C478. For size, details and additional requirements, see Contract Drawings. Base slab can be either precast or cast-in-place concrete construction.

2.1.4.2 Precast manhole cylinders and slabs shall be designed to resist vertical live load due to HS20-44 truck wheel load. The lateral earth pressure shall be based on at-rest earth pressure coefficient of 0.43. However, the upper 11 feet of manhole from grade shall be designed for a minimum uniform lateral earth pressure of 600 psf caused by soil compaction effect and truck load.

2.1.4.3 The basis for acceptance shall be either rational design per ACI 318 or physical tests per Sections 6 and 11 of ASTM C478.

2.1.4.4 Frames and covers for manholes shall be cast iron conforming to ASTM A48, Gray Iron Castings, Class 30C or better, extra heavy duty type for HS20-44 truck traffic.

2.1.4.5 Manhole Steps

Manhole steps or rungs shall be 1 inch diameter steel conforming to ASTM A36 and bent to dimensions shown on Contract Drawings. All steps/rungs shall be galvanized per ASTM A123 after bending. Rungs shall be grouted with cement concrete mortar firmly packed in place in the concrete walls. Rungs or steps shall be uniformly spaced on 12 inch center and vertically aligned. Alternately, rungs may be installed as cast-in-place during manhole construction.

2.1.5 Septic and Dosing Tank

Septic and dosing tanks shall be constructed of reinforced concrete, 4000 psi 28-day minimum compressive strength, and as detailed on the Contract Drawings and per Specification Section 03300, Concrete Construction.

2.1.6 Siphons

Siphons for dosing tank shall be of size indicated on the Contract Drawings and shall be automatic dosing siphon Miller Standard or equal.

2.1.7 Sanitary Sewer Pipe and Fittings

2.1.7.1 All sewer piping and fittings for septic, manifold and leach (drainage) lines, including standard and perforated, shall be Schedule 40 polyvinyl chloride (PVC) pipe conforming to the requirements of ASTM D1785, Type 1 and Grade 1.

2.1.7.2 Perforations of the leach lines shall be 3/16 inch diameter at 6 feet centers in a single row along the pipe as indicated on the Contract Drawings.

2.1.7.3 The monitoring ports shall be 4 inch polyvinyl chloride (PVC) pipe, Schedule 40 with 1/2 inch perforations at 6 inches and wrapped with filter fabric.

2.1.8 Filter Aggregate

The filter aggregate used in the construction of absorption field shall be washed gravel free of dust, fines and dirt. The dimensions of the rock shall vary from 1/2 to 2-1/2 inches, measuring the longest dimension. The gravel in the trenches must be covered by filter fabric, as detailed on the Contract Drawings.

The rocks shall be durable and resistant to slaking and dissolution. The rocks shall have hardness of 3 or greater on the Moh's scale of hardness. Crushed limestone shall not be used.

2.1.9 Filter Fabric

The filter fabric shall be non-woven, polypropylene geotextile fabric such as Fibertex, Grade 150, 60 mil thick as manufactured by Crown Zellerbach, Camas, WA or equal.

2.1.10 Coating

All exterior and interior concrete surfaces of the septic tank, dosing tank and manholes shall be coated with a single coat of bituminous mastic such as Bitumastic 50 by Carboline Company or equal.

2.2 FABRICATION AND MANUFACTURE

The fabrication and manufacture of the precast concrete manholes shall be in accordance with ASTM C478.

PART 3 EXECUTION

3.1 INSTALLATION, APPLICATION AND ERECTION

3.1.1 Earthwork

Earthwork requirements for excavation and backfill, including bedding for pipe trenches shall be in accordance with Section 02220, Excavation and Backfill.

3.1.2 Pipe Laying and Jointing

Inspect each pipe and fitting before and after installation; replace those found defective and remove from site. Provide proper equipment for lowering sections of pipe into trenches. Lay pipe with the bell ends in the upgrade direction. Adjust spigots in bells to provide a uniform space all around. Blocking or wedging between bells and spigots will not be permitted. At the end of each work day, close open ends of pipe temporarily.

3.1.3 Installation of PVC Plastic Piping

Install pipe and fittings in accordance with the requirements of UBPPA UNI-B-5 and Contract Drawings. Joints with gaskets shall be made in accordance with the requirements of UBPPA UNI-B-3 for assembly of joints. Joints to other pipe materials shall be in accordance with the recommendations of the plastic pipe manufacturer.

3.1.4 Pipeline Beneath Road and Railroad

Bored or jacketed installation under existing road or railroad is not permitted without Buyer's approval of the Seller's proposed method.

3.1.5 Concrete Work

Cast-in-place concrete work shall be performed in accordance with Section 03300, Concrete Construction.

3.1.6 Manhole Construction

Construct base slab of cast-in-place concrete or use precast concrete base section. Make inverts with a smooth-surfaced semi-circular bottom conforming to the inside contour of the adjacent sewer sections. For changes in direction of the sewer and entering branches into the manhole, make a circular curve in the manhole invert of as large a radius as manhole size will permit. For cast-in-place concrete construction, either pour bottom slabs and walls integrally or key and bond walls to bottom slab. Make joints between concrete manholes and pipes entering manholes as shown on Contract Drawings.

3.1.7 Frames and Covers

The frames and covers shall be set such that the top of the cover is set at elevations specified on the Contract Drawings. The surrounding surface, paved or unpaved, shall be prepared as indicated on the Contract Drawings.

3.1.8 Septic and Dosing Tanks

Construct septic and dosing tanks including manholes all in accordance with the referenced material, specifications and the Contract Drawings. Install siphon in accordance with manufacturer's instructions. Concrete construction shall conform to Specification Section 03300. Coating shall be per Paragraph 2.1.10.

3.1.9 Leach Fields

The trenches for the perforated leach or drainage pipes shall be carefully excavated to the width and depth required to permit the pipe to be laid to the proper grade as shown on the Contract Drawings. Trenches shall not be excavated when the soil is wet enough to smear or compact easily. All smeared or compacted surfaces shall be raked to a depth of 1 inch and loose material removed before the filter aggregate is placed. Filter aggregate shall not be compacted. Lay perforated pipe with the perforations

downward. Each section of drainage pipe shall have a firm bearing throughout its length. Perforated pipe sections shall be jointed by the manufacturer's standard couplings. All junctions and bends shall be made with fittings of standard manufacture, and suitable caps or plugs shall be provided and installed to close ends of pipes. Pipe that is out of alignment or shows signs of settlement shall be relaid as required to obtain proper alignment. The top of the aggregate bedding above the drainage pipe shall be covered with filter fabric to prevent the aggregate from clogging. The trench shall then be backfilled in accordance with Specification Section 02220, Excavation and Backfill.

3.2 FIELD QUALITY CONTROL

3.2.1 Tests and Inspections

The Buyer or his representative will conduct field inspections and witness field tests specified in this section. The Seller shall perform field tests and provide labor, equipment, and incidentals required for testing. The Seller shall be able to produce evidence, when required, that each item of work has been constructed in accordance with the drawings and specifications.

3.2.2 Tests for Pipelines

Check each straight run of pipeline for gross deficiencies by holding a light in a manhole; it shall show a practically full circle of light through the pipeline when viewed from the adjoining end of line. Correct the alignment of pipeline when tests show the deviation from straight run or deformations in the pipe.

3.2.2.1 Leakage Tests

Test lines for leakage by exfiltration tests. Prior to testing for leakage, backfill trench up to at least lower half of pipe. When necessary to prevent pipeline movement during testing, place additional backfill around pipe sufficient to prevent movement, but leaving joints uncovered to permit inspection. When leakage or pressure drop exceeds the allowable amount specified, make satisfactory correction and retest pipeline section in the same manner. Correct visible leaks regardless of leakage test results.

A. Exfiltration Tests: Perform these tests for sewer lines made of the specified materials, not only concrete, in accordance with ASTM C969. Make calculations in accordance with the Appendix to ASTM C969.

An alternate method for leakage, such as air test, may be used by the Seller with Buyer's approval.

3.2.2.2 Deflection Testing

Perform a deflection test on entire length of installed pipeline on completion of work adjacent to and over the pipeline, including leakage tests, backfilling, placement of fill, grading, paving, concreting, and any other superimposed loads determined in accordance with ASTM D2412. Deflection of pipe in the installed pipeline under external loads shall not exceed 4.5 percent of the average inside diameter of pipe. Determine whether the allowable deflection has been exceeded by use of a pull-through device or a deflection measuring device.

A. Pull-through Device: This device shall be a spherical, spheroidal, or elliptical ball, a cylinder, or circular sections fused to a common shaft. Circular sections shall be so spaced on the shaft that distance from external faces of front and back sections will equal or exceed diameter of the circular section. Pull-through device may also be of a design promulgated by the Uni-Bell Plastic Pipe Association, provided the device meets the applicable requirements specified in this paragraph, including those for diameter of the device, and that the mandrel has a minimum of 9 arms. Ball, cylinder, or circular sections shall conform to the following:

1. A diameter, or minor diameter as applicable, of 95 percent of the average inside diameter of the pipe; tolerance of plus 0.5 percent will be permitted.

2. Homogeneous material throughout, shall have a density greater than 1.0 as related to water at 39.2°F, and shall have a surface Brinell hardness of not less than 150.

3. Center bored and through-bolted with a 1/4 inch minimum diameter steel shaft having a yield strength of not less than 70,000 pounds per square inch, with eyes or loops at each end for attaching pulling cables.

4. Each eye or loop shall be suitably backed with a flange or heavy washer such that a pull exerted on opposite end of shaft will produce compression throughout remote end.

B. Deflection Measuring Device: Sensitive to 1.0 percent of the diameter of the pipe being tested and shall be accurate to 1.0 percent of the indicated dimension. Deflection measuring device shall be approved prior to use.

C. Pull-Through Device Procedure: Pass the pull-through device through each run of pipe, either by pulling it through or flushing it through with water. If the device fails to pass freely through a pipe run, replace pipe which has the excessive deflection and completely retest in same manner and under same conditions.

D. Deflection Measuring Device Procedure: Measure deflections through each run of installed pipe. If deflection readings in excess of 4.5 percent of average inside diameter of pipe are obtained, retest pipe by a run from the opposite direction. If retest continues to show a deflection in excess of 4.5 percent of average inside diameter of pipe, replace pipe which has excessive deflection and completely retest in same manner and under same conditions.

3.2.3 Concrete Testing

Field Quality Control requirements for concrete work shall be per Specification Section 03300, Concrete Construction.

3.2.4 Excavation and Backfill Testing

Field Quality Control requirements for excavation and backfill shall be as per Specification Section 02220, Excavation and Backfill.

3.2.5 Septic System

3.2.5.1 The septic system construction shall be done by a Seller certified by the local Health Department having jurisdiction over the Hanford area.

3.2.5.2 The Seller shall notify the appropriate review agency for required inspections and testing as agreed upon prior to commencement of the work.

3.2.5.3 Test the operation of the alternating siphons and pressure distribution systems for proper performance as recommended by the siphon manufacturers and the local Health Department. Make satisfactory correction and retest siphons and pressure distribution systems until operation is satisfactory to Buyer and local Health Department.

3.2.5.4 Test non-perforated pipe lines for leakage by exfiltration tests. Prior to testing for leakage, backfill trench up to at least lower half of pipe. When necessary to prevent pipeline movement during

testing, place additional backfill around pipe sufficient to prevent movement, but leaving joints uncovered to permit inspection. When leakage or pressure drop exceeds the allowable amount specified, make satisfactory correction and retest pipeline section in the same manner. Correct visible leaks regardless of leakage test results.

A. Exfiltration Tests

Perform these tests for pipe lines made of the specified materials, not only concrete, in accordance with ASTM C969. Make calculations in accordance with the Appendix to ASTM C969.

3.3 CLEANING

Upon completion of work, the Seller shall remove all waste and surplus material resulting from his operations and leave the site clean.

END OF SECTION

THIS PAGE INTENTIONALLY
LEFT BLANK

SECTION 02830
STEEL CHAIN-LINK FENCE

PART I GENERAL

1.1 SUMMARY

This section covers the technical requirements for the furnishing and complete installation of steel chain link fencing and appurtenances as shown on the Contract Drawings.

1.2 REFERENCES

The publications listed below form a part of this specification to the extent referenced. The publications are referred to in the text by the basic designation only.

AMERICAN SOCIETY FOR TESTING AND MATERIALS (ASTM)

ASTM A90	1987 Standard Test Method for Weight of Coating on Zinc-Coated (Galvanized) Iron or Steel Articles
ASTM A153	1982 Standard Specification for Zinc Coating (Hot-Dip) on Iron and Steel Hardware
ASTM A392	1989 Standard Specification Zinc-Coated Steel Chain-Link Fence Fabric
ASTM C33	1990 Standard Specification for Concrete Aggregates
ASTM C150	1989 Standard Specification for Portland Cement
ASTM F1083	1987 Standard Specification for Pipe, Steel, Hot-Dipped Zinc-Coated (Galvanized) Welded, for Fence Structures

1.3 SUBMITTALS

Submit the following in accordance with the Vendor Drawing and Data Requirements section of the Order/Subcontract.

1.3.1 Shop Drawings

Show all fencing components, details of fencing and accessories. These drawings or catalog cuts shall be accompanied by a layout drawing showing spacing of posts and location of gate, corner, end, and pull posts and bracing system.

PART 2 PRODUCTS

2.1 MATERIALS AND/OR EQUIPMENT

Materials shall conform to the following:

2.1.1 Coating

All fence parts including fasteners shall have a firmly adhering zinc coating of uniform thickness. The minimum average weight of coating per square foot of coated surface shall be not less than 1.2 ounces (2 mils) on all fence material except pipe for posts, braces and gates which shall receive 1.8 ounces (3 mils). The minimum average weight of coating on fasteners shall be in accordance with Table 1 of ASTM A153. The weight of zinc coating shall be determined in accordance with ASTM A90. The coating shall be applied to all parts after fabrication.

2.1.2 Fabric

2.1.2.1 Fence fabric shall be 2 inch woven diamond mesh, chain-link, of standard commercial grade galvanized steel wire. Wire shall be 9 gauge having a minimum tensile strength of 75000 psi and conforming to ASTM A392, Class 1.

2.1.2.2 The top and bottom selvages of the fabric shall have a twisted and barbed finish. The wire shall be barbed by cutting the wire at an angle, producing sharp points. The total height of the fabric shall be 7 feet, plus or minus 1 inch.

2.1.3 Posts

All posts shall be fitted with a ball top or similar fitting to shed water.

2.1.3.1 Line Posts

Line posts shall be galvanized steel 2 inch diameter Schedule 40 pipe conforming to ASTM F1083.

2.1.3.2 Terminal and Gate Posts

2.1.3.2.1 End posts, corner posts, and pull posts shall be galvanized steel 2.5 inch diameter Schedule 40 pipe conforming to ASTM F1083.

2.1.3.2.2 Gate posts shall be galvanized steel 3.5 inch diameter Schedule 40 pipe conforming to ASTM F1083.

2.1.4 Tension Wires

The top and bottom tension wires shall be 7 gauge steel wire, galvanized, standard commercial grade steel having a minimum tensile strength of 75000 psi.

2.1.5 Post Braces

2.1.5.1 Horizontal steel pipe braces for gate, corner, and pull posts shall be galvanized steel pipe 1.5 inch diameter Schedule 40 conforming to ASTM F1083.

2.1.5.2 Diagonal truss bracing for gate, corner, and pull posts shall be galvanized steel rods 3/8 inch diameter with turnbuckles.

2.1.6 Fabric Ties

Fence fabric shall be fastened to line posts with minimum 9 gauge wire ties and to tension wires with minimum 11 gauge wire ties. Wire ties may be either aluminum or galvanized steel wire which shall not fracture when bent 180 degrees on a mandrel having the same diameter as the wire.

2.1.7 Miscellaneous Fittings

All other fittings used in the construction of the fence shall be malleable iron, cast iron, or pressed steel and shall be galvanized in accordance with ASTM A153.

2.1.8 Gates

Gate frames shall be fabricated from 1.5 inch diameter Schedule 40 galvanized steel pipe conforming to ASTM F1083. All open ends of pipe members in gate frames shall be fitted with a pipe plug. Gate frame corner fittings, if used, shall be of malleable iron. If gate frames are of welded construction they shall be galvanized after fabrication. All gate frames shall be rigidly braced to prevent sagging, buckling, and weaving.

2.1.8.1 Fabric for gates shall be the same as specified for the fence in Paragraph 2.1.2.

2.1.8.2 Hinges shall be of heavy pattern, zinc-coated steel of adequate strength for the gate, and with large bearing surfaces for clamping in position. The hinges shall allow the gate to swing a minimum of 180 degrees, and shall not twist or turn under action of the gate. The gate shall be capable of being opened and closed easily by one person.

2.1.8.3 Latches, stops and keepers shall be zinc-coated steel and be provided for all gates. Latches shall have a plunger bar arranged to engage the center stop, except that for single gates less than 8 feet wide a forked latch may be provided. Latches shall be arranged for padlocking (accessible from both sides of gate). Center stops shall consist of a device, set in concrete, to engage the plunger bar. Keepers shall be provided and set in concrete to secure the free end of the gate when in the full open position. Details of a typical gate and gate hardware are shown on Attachment B of this specification.

2.1.8.4 All miscellaneous fittings used in the construction of gates shall be of malleable iron, cast iron, or pressed steel, and shall be galvanized after fabrication in accordance with ASTM A153.

2.1.9 Concrete

Concrete for fence foundations shall be ready-mix concrete having a minimum compressive strength of 2500 psi at 28 days.

Concrete shall consist of Portland cement Type I or II per ASTM C150, aggregates conforming to ASTM C33 and potable water. Use minimum 4 sacks of cement per cubic yard of concrete. Maximum aggregate size shall not exceed 1 inch.

PART 3 EXECUTION

3.1 GENERAL

The fence shall be installed true to line and grade in the location shown on the Contract Drawings and in accordance with this specification, including the Chain Link Fence Details, Gate, and Typical Fittings shown on Attachments A and B.

3.2 PREPARATION

The site grade along the fence line will have been prepared by others and the Seller shall install the fence to match the established grade/surface.

3.3 INSTALLATION, APPLICATION AND ERECTION

3.3.1 Setting Posts

3.3.1.1 All posts shall be set in concrete, plumb and true to line. Additional construction details are shown on Attachment A of this specification. All posts shall be set with the top (exclusive of ball caps) 7 feet above finish surface. Maximum spacing of line posts shall be 10 feet on center.

3.3.1.2 Holes for setting line posts shall be 12 inches diameter; and holes for pull, gate and corner posts shall be 16 inches diameter except 24 inch diameter hole shall be used for 8 inch diameter gate post. The hole diameter can deviate minus zero and plus 2 inches from the above specified values.

3.3.1.3 The line posts adjacent to the terminal posts (brace posts) shall be set at the spacing required to make the horizontal braces fit properly. A pull post shall be set at each break in the fence line grade exceeding 15 degrees.

3.3.1.4 In setting gate posts, the posts must be set at the spacing shown on the approved shop drawings. For example, posts for a six-foot gate must be set to leave a clear opening of six feet. The tops of gate posts at each gate must be at the same elevation.

3.3.1.5 All posts shall be set plumb and firmly supported to prevent movement or deflection until the concrete has thoroughly set (24 hours minimum) before performing other work on the posts.

3.3.2 Bracing Posts

All gate, corner (angle 30 degrees and larger) and terminal posts shall be braced horizontally with steel pipe using brace attachments, and shall be braced diagonally using steel rods with truss attachments in accordance with the Buyer approved manufacturer's recommendations and as shown on Attachment A. Pull posts shall be provided and braced at intervals not to exceed 500 feet length of straight fence.

3.3.3 Tension Wires

3.3.3.1 Top and bottom tension wires shall be installed to stabilize wire fabric. The top tension wire shall be installed through 1/4 inch holes drilled in each post (except gate posts) 2±1/2 inches below the top of the post.

3.3.3.2 Bottom tension wires shall be installed through 1/4 inch holes in each post (except gate posts) 3±1/2 inches above finished surface.

3.3.3.3 Top and bottom tension wires shall be connected to the gate posts with a galvanized clip or band supplied by the fence manufacturer.

3.3.4 Attaching and Stretching Fabric

3.3.4.1 Stretcher bars shall be threaded through end loops of each section of fabric and tied to end, break-in-grade, corner, and gate posts with stretcher bar bands spaced not more than 15 inches on center.

3.3.4.2 The fabric shall be fastened to the line posts with ties conforming to Paragraph 2.1.8 and spaced not more than 14 inches on centers. The topmost tie shall be as near the top of the fabric as possible; the lowest tie as near the bottom of the fabric as possible.

3.3.4.3 The fabric shall be tied to the top and bottom tension wires with ties conforming to Paragraph 2.1.8 and spaced not more than 24 inches on centers.

3.3.4.4 The fence fabric shall be stretched taut.

3.3.4.5 The barbed ends of the barbed top fabric shall extend approximately two to three inches above the top tension wire. Each barb shall be straightened as needed in order to present an unbroken line above and below the tension wire.

3.3.4.6 The bottom of the fabric shall extend to within 2 inches of the finish surface.

3.3.5 Installation of Gates

3.3.5.1 Gates shall be installed in accordance with the Contract Drawings, this specification and the drawing on Attachment B. Gates shall be installed in good alignment, and shall swing and latch properly. The gate hinges shall be so adjusted that the gates swing inward and outward at an angle of 180 degrees or more. Gate hinges shall be installed to permit a maximum 2 inches from finish surface to bottom of gate.

3.3.5.2 Gate fabric shall be installed on gate frames with tension bands spaced at a maximum 15 inches center vertically and horizontally.

3.3.6 Bolt Heads

All bolt heads shall be located on the outside of the fence.

3.3.7 Repair of Damaged Zinc Coatings

3.3.7.1 Damages caused by welding, cutting, drilling, and rough handling during shipping and erection shall be repaired using one or a combination of the following methods:

A. Zinc Based Solders - Zinc alloy solder composed of zinc-cadmium or zinc-tin-lead alloy having a melting point in the range of 450°F through 530°F. The solders can be in a rod, stick or powder form.

B. Organic Zinc Rich Coating - Polyamide cured epoxy for use on steel surfaces. The dry film shall contain a minimum of 94 percent zinc dust by weight.

3.3.7.2 Repairs shall be made on clean and dry surfaces, removing oil, grease, burnt residue weld spatter, and other contaminants. Follow the manufacturer's instructions for application.

3.3.7.3 Regardless of the method used, one application of the zinc coating shall provide a dry film thickness of 2.0 to 3.0 mils.

3.4 **PROTECTION**

Measures shall be taken to protect all existing facilities such as benchmarks, fences, railroads, existing utilities, aboveground electrical, and other items which are to remain and not designated for removal. Items to be protected which are not readily visible in the working area shall be clearly identified with barricades, posts, and/or conspicuously colored flagging.

END OF SECTION

THIS PAGE INTENTIONALLY
LEFT BLANK

ATTACHMENT A

CHAIN LINK FENCE DETAILS

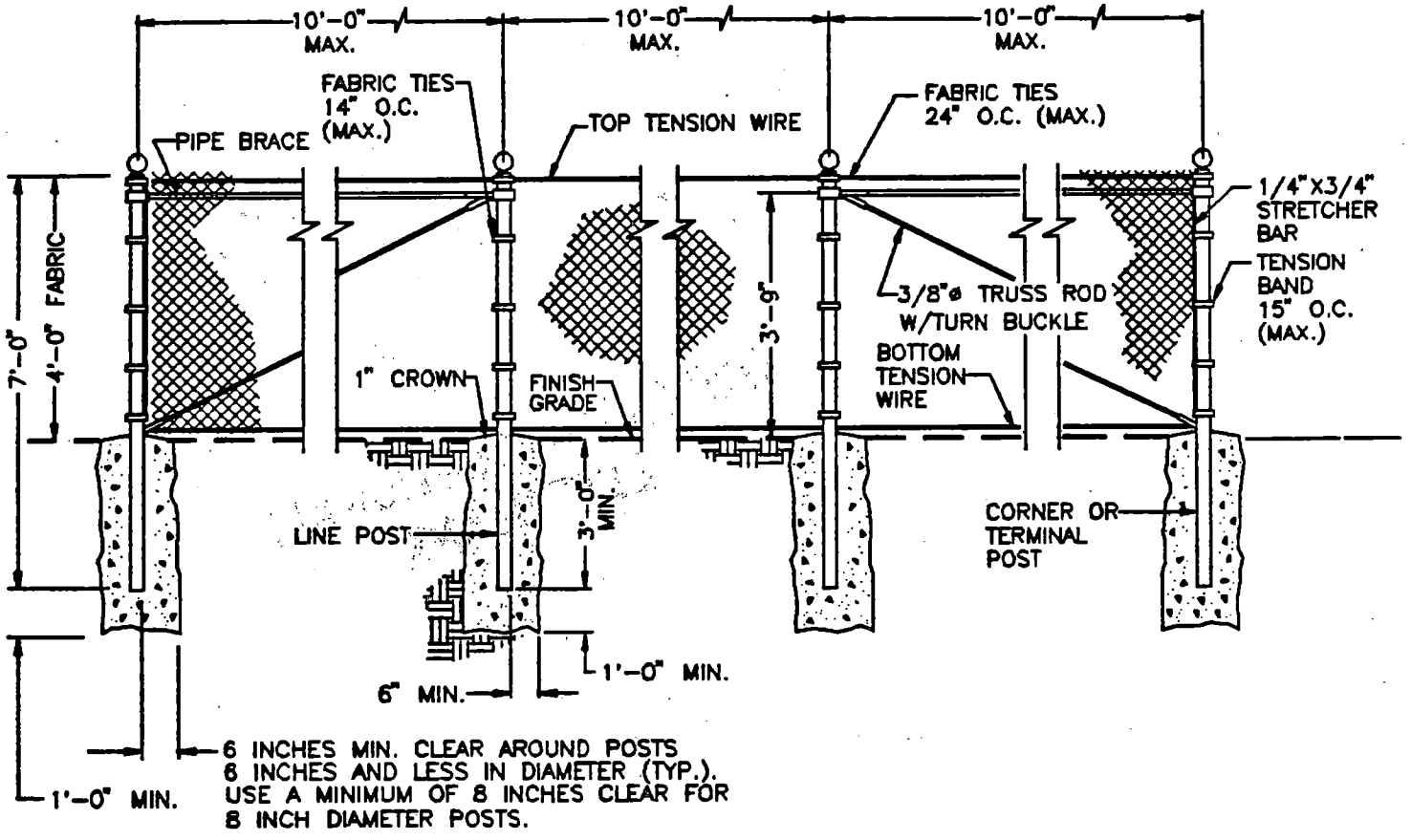

NOTE: Use 24 inch diameter for 8 inch gate post.

THIS PAGE INTENTIONALLY
LEFT BLANK

ATTACHMENT B

CHAIN LINK FENCE GATE AND TYPICAL FITTINGS

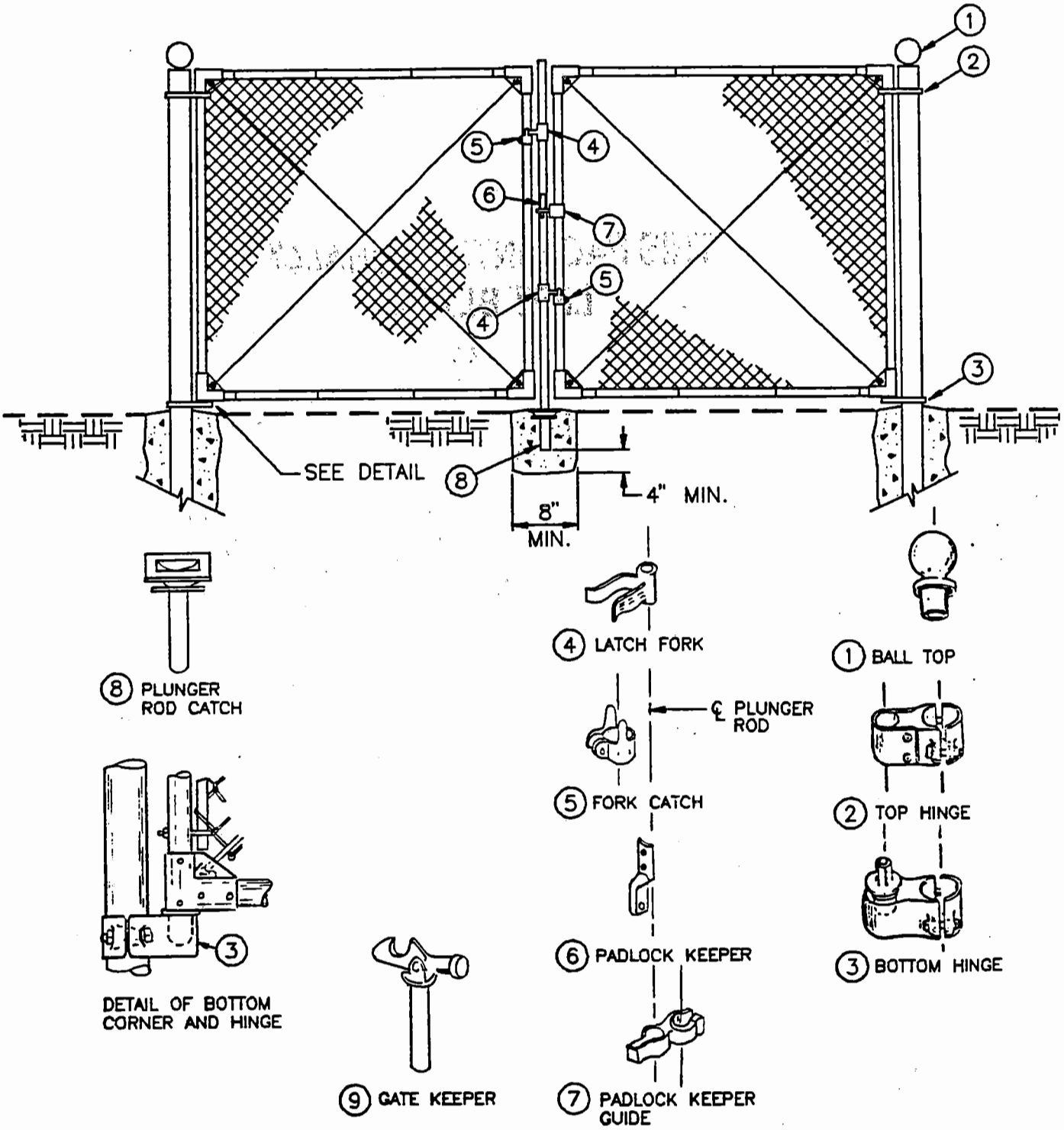

THIS PAGE INTENTIONALLY
LEFT BLANK

SECTION 03300
CONCRETE CONSTRUCTION
(SAFETY CLASS 3, RATED FOR SAFETY CLASS 1 DBE)

PART 1 GENERAL

1.1 SUMMARY

This section covers the technical requirements for the furnishing, installation, inspection and testing of cast-in-place concrete work as shown on the Contract Drawings. Requirements for concrete, reinforcing steel, anchors, embeds and grout are specified in this section.

1.2 REFERENCES

The publications listed below form a part of this specification to the extent referenced. The publications are referred to in the text by basic designation only.

AMERICAN CONCRETE INSTITUTE (ACI)

ACI 301	1989 Specification for Structural Concrete for Buildings
ACI 305R	1989 Hot Weather Concreting
ACI 306R	1988 Cold Weather Concreting
ACI SP-66	1988 ACI Detailing Manual

AMERICAN SOCIETY FOR TESTING AND MATERIALS (ASTM)

ASTM A36	1989 Standard Specification for Structural Steel
ASTM A307	1990 Standard Specification for Carbon Steel Bolts and Studs, 60,000 psi Tensile Strength
ASTM A563	1990 Standard Specification for Carbon and Alloy Steel Nuts
ASTM A615	1990 Standard Specification for Deformed and Plain Billet-Steel Bars for Concrete Reinforcement

ASTM C31	1990 Standard Test Method for making and Curing Concrete Test Specimens in the Field
ASTM C33	1990 Standard Specification for Concrete Aggregates
ASTM C39	1986 Standard Method of Test for Compressive Strength of Cylindrical Concrete Specimens
ASTM C94	1990 Standard Specification for Ready-Mixed Concrete
ASTM C109	1988 Standard Test Method for Compressive Strength of Hydraulic Cement Mortars
ASTM C143	1990 Standard Test Method for Slump of Hydraulic Cement Concrete
ASTM C150	1989 Standard Specification for Portland Cement
ASTM C172	1990 Standard Practice for Sampling Freshly Mixed Concrete
ASTM C173	1978 Standard Test Method for Air Content of Freshly Mixed Concrete by the Volumetric Method
ASTM C191	1982 Standard Test Method for Time of Setting of Hydraulic Cement by VICAT Needle
ASTM C260	1986 Standard Specification for Air-Entraining Admixtures for Concrete
ASTM C494	1986 Standard Specification for Chemical Admixtures for Concrete
ASTM C827	1987 Standard Test Method for Change in Height at Early Ages of Cylindrical Specimens from Cementitious Mixtures

1.3 SUBMITTALS

Submit the following in accordance with the Vendor Drawing and Data Requirements section of the Order/Subcontract.

1.3.1 Cast-in-Place Concrete

1.3.1.1 Materials

Material test reports for all concrete materials and admixtures to demonstrate conformance to the specification requirements.

1.3.1.2 Mix Design

Concrete mix design including compression testing of cylinders to demonstrate conformance to the specification requirements.

1.3.1.3 Placement Drawings

Concrete placement schedule per Paragraph 3.3.3.1.

1.3.1.4 Jobsite Records

Submit jobsite records of placed concrete per Paragraph 3.3.3.7.

1.3.1.5 Test Reports on slump, air content and compression tests as defined in Paragraph 3.4.3 will be by the Buyer.

1.3.2 Reinforcing Steel

1.3.2.1 Shop fabrication and placement drawings prepared in accordance with ACI SP-66.

These drawings shall indicate bar sizes, spacings, locations and quantities of reinforcing steel, bending and cutting schedules, supporting and spacing devices, as well as complete placing information such as the required concrete cover and the location of splices and construction joints.

1.3.2.2 Certified Mill Test Report documenting the conformance of the material as specified in Paragraph 2.3.

1.3.3 Concrete Anchors

1.3.3.1 Certified Mill Test Report documenting the conformance of the material as specified in Paragraph 2.4.

1.3.3.2 Documentation of inspection and testing as specified in Paragraph 3.4.4.

1.3.3.3 Copy of the current International Conference of Building Officials (ICBO) evaluation report, as required in Paragraph 2.5.3, documenting the installed capacity of the drilled anchor.

1.3.3.4 Copy of the manufacturer's printed instructions for the installation of drilled anchors used to comply with the requirements of Paragraph 3.3.8.3.

1.3.3.5 Documentation demonstrating that personnel installing drilled anchors have received training, as specified in Paragraph 3.3.8.5, from the manufacturer prior to installing any drilled anchors.

1.3.4 Nonshrink Cement-Based Grout

1.3.4.1 Submit a catalog cut for all grout materials provided.

1.3.4.2 Documentation verifying that nonshrink cement-based grout provided can meet the requirements specified in Paragraph 2.7.2.

1.3.4.3 A copy of the manufacturers printed instructions used to comply with the requirements of Paragraph 3.3.9.1.

1.3.4.4 Documentation verifying the nonshrink properties of the grout materials delivered to the jobsite specified in Paragraph 3.4.5.

PART 2 PRODUCTS

2.1 CAST-IN-PLACE CONCRETE

2.1.1 Cement: ASTM C150; Type I or Type II

One brand of cement shall be used throughout the work to maintain uniform color. The cement used for the production of concrete shall be the same as the cement selected for the concrete mix design.

2.1.2 Aggregates: ASTM C33; Maximum size of coarse aggregate shall be 1 inch unless noted otherwise on the Contract Drawings.

2.1.3 Water: Shall be clean and potable meeting the requirements of ASTM C94. In addition, the water shall not contain more than 250 ppm of chloride as Cl.

2.1.4 Admixtures:

2.1.4.1 Air Entrainment: ASTM C260; MB-VR manufactured by Master Builders, Inc. or equal.

2.1.4.2 Water Reducing: ASTM C494, Type A; Pozzolith 220-N manufactured by Master Builders, Inc. or equal.

2.1.5 Concrete Mix

2.1.5.1 Mix concrete in accordance with ACI 301, Chapter 7. Deliver concrete in accordance with ASTM C94.

2.1.5.2 Select proportions for normal weight concrete in accordance with ACI 301, Chapter 3.

2.1.5.3 Concrete shall conform to the following requirements:

Compressive Strength (28 days):	4,000 psi
W/C Ratio:	W/C ratio not to exceed 0.5
Slump:	2 to 4 inches
Air Entrainment:	As required per mix design, not to exceed 4 percent

2.1.5.4 Use accelerating admixtures in cold weather only when approved by the Buyer. Use of admixtures will not relax cold weather placement requirements.

2.1.5.5 Use of calcium chloride is not permitted.

2.1.5.6 Use set retarding admixtures during hot weather only when approved by the Buyer.

2.1.5.7 Admixtures used in the work shall be of the same composition as those used in establishing the concrete properties.

2.1.5.8 Storage of materials shall be per Section 2.5 of ACI 301.

2.2 **MISCELLANEOUS CONCRETE**

Concrete for underground duct banks, utility encasement, thrust block, guard post and fire hydrant foundation shall comply to the requirements specified above for cast-in-place concrete except as noted below.

Compressive Strength (28 days):	2500 psi
Maximum Aggregate Size:	3/8 inch
Cement per cubic yard of concrete:	4 sacks, minimum

The top surface of all underground duct banks shall be colored red. The color may be applied by sprinkling red iron oxide powder over freshly poured concrete at the rate of 0.1 pounds per square foot of concrete surface, or painting the surface after concrete has hardened and cured.

2.3 **REINFORCING STEEL**

ASTM A615, 60 ksi yield grade; deformed billet steel bars, plain finish.

2.4 **ANCHOR BOLTS**

An anchor bolt assembly shall consist of a carbon steel bolt threaded at both ends supplied with 2 heavy hex nuts (one for each end), or a bolt with heavy hex head and a nut, conforming to the following requirements:

Anchor Bolts - ASTM A307, Grade C, or A36
Heavy Hex Nuts - ASTM A563, Grade A

2.5 **DRILLED ANCHORS**

2.5.1 Drilled anchors shall be carbon steel Kwik Bolt-II manufactured by Hilti Inc. or equal unless specified otherwise on the Contract Drawings.

2.5.2 Drilled anchors shall be provided as a completed assembly including the nut, and shall include all components necessary for the complete installation of the anchor.

2.5.3 Drilled anchors shall have a current International Conference of Building Officials (ICBO) evaluation report. The evaluation report shall indicate the allowable "working" shear and tension capacities for anchors installed in 4000 psi concrete.

2.5.4 Drilled anchors shall have a length identification system that allows the determination of the length of an anchor without its removal.

2.6 **CONCRETE ACCESSORIES**

2.6.1 All accessories and devices associated with the installation of cast-in-place concrete shall be supplied in accordance with this section and the requirements shown on the Contract Drawings.

2.6.2 Tie Wire: Minimum 16 gauge, black, annealed type.

2.6.3 Chairs, Bolsters, Bar Supports, Spacers: Sized and shaped for strength and support of reinforcement during concrete placement.

2.6.4 Special Chairs, Bolsters, Bar Supports, Spacers adjacent to Weather Exposed Concrete Surfaces: Plastic coated steel type; size and shape as required.

2.6.5 Forms for concrete work shall conform to ACI 301, Chapter 4.

2.7 NONSHRINK CEMENT-BASED GROUT

2.7.1 Nonshrink cement-based grout shall be a premixed, properly preproportioned, factory packaged and ready-to-use product consisting of a patented mixture of cement, sand and inert materials. The amount of water added to the premixed dry product shall be in strict accordance with the manufacturer's printed instructions.

2.7.2 Nonshrink cement-based grout shall be Five Star Grout by U.S. Grout or equal and shall meet the following requirements:

A. Minimum compressive strength of 5000 psi at 28 days when tested in accordance with ASTM C109.

B. No shrinkage (zero percent) and a maximum of 4 percent expansion when tested in accordance with ASTM C827. No shrinkage (zero percent) and a maximum of 0.4 percent expansion in the hardened state when tested in accordance with CRD-C621.

C. A minimum initial set time of 60 minutes when tested in accordance with ASTM C191.

D. Shall not contain metallic particles such as aluminum powders or iron filings, or expansive cement.

E. Shall be free of chemically produced gas, oxidizing catalysts, inorganic accelerators, including chlorides and shall be nonstaining.

The manufacturer shall provide technical service as required.

Potable water shall be used in mixing and curing the grout. Use the minimum amount of water necessary for proper installation. Temperature of mixing water shall not exceed 80°F.

2.8 FABRICATION AND MANUFACTURE

2.8.1 Fabricate reinforcing steel in accordance with ACI SP-66 and to the dimensions shown on the Contract Drawings.

2.8.2 Bend bars cold in a manner that will not injure the material.

2.8.3 Store reinforcing steel off the ground and protect from oil or other deleterious materials.

2.8.4 Rust, seams, surface irregularities, or mill scale shall not be cause for rejection, provided the weight and height of deforma-

tions of a hand-wired-brush test specimen are not less than the applicable ASTM specification requirements.

2.8.5 Anchor bolts and reinforcing bars shall be bundled and tagged showing quantity, grade, size, and suitable identification to allow checking, sorting and placing in the field.

PART 3 EXECUTION

3.1 PREPARATION FOR CONCRETE

3.1.1 Verify that the concrete cover is as shown on the Contract Drawings and that anchors, seats, plates, reinforcement and other items to be cast into concrete are accurately placed, securely positioned as shown on the Contract Drawings.

3.1.2 Construction joints shall be prepared in accordance with ACI 301, Section 6.1 and Section 8.5.3. Modify Section 6.1.4.3 as follows: Roughen the concrete surface uniformly to a full amplitude of approximately 1/4 inch in a manner that will remove laitance, loosened aggregate or damaged concrete at the surface.

3.1.3 Remove laitance and concrete splatter from protruding reinforcing steel after each concrete placement.

3.1.4 Continue all reinforcement across construction joints. Do not use longitudinal keys and inclined dowels.

3.1.5 All equipment for mixing and transporting concrete shall be clean.

3.1.6 All debris and ice shall be removed from spaces to be occupied by concrete.

3.1.7 Forms shall be properly coated in accordance with Section 4.4 of ACI 301.

3.1.8 Reinforcement shall be thoroughly clean of ice, earth, loose rust and mill scale or other deleterious coatings.

3.1.9 Water shall be removed from place of deposit before concrete is placed.

3.1.10 All laitance and other unsound material shall be removed before additional concrete is placed against hardened concrete.

3.2 PREPARATION FOR GROUT

3.2.1 Concrete surfaces on which nonshrink cement-based grout is to be placed shall be thoroughly soaked with water for 24 hours. Just

prior to grouting, the water shall be removed leaving only a damp film. Alternately, bonding agent recommended by the grout manufacturer may be used.

3.2.2 Concrete surfaces to be grouted shall have cured for a minimum of seven days prior to surface preparation.

3.2.3 Concrete surfaces shall be prepared for grouting by chipping back to sound concrete. The surface shall be clean, with all laitance, grease, oil, dirt or loosened aggregate removed prior to setting leveling plates.

3.2.4 Set and anchor all leveling plates and embedments to the proper line and elevation. The number and type of leveling plates shall be determined in accordance with the recommendations of the equipment manufacturer and other contract documents.

3.2.5 Metal surfaces in contact with the grout shall be clean and free of oil and grease, and other foreign substances. The presence of tightly bonded paint is acceptable.

3.3 **INSTALLATION, APPLICATION AND ERECTION**

3.3.1 Formwork

3.3.1.1 Formwork design and installation shall be in accordance with ACI 301, Chapter 4. Form exposed corners of structures and foundations with a one inch chamfer unless noted otherwise on the Contract Drawings.

3.3.1.2 Do not remove forms and shoring used to vertically support the weight of concrete until the concrete has reached the specified compressive strength of 4000 psi.

3.3.1.3 Do not remove forms and shoring used to laterally support the weight of concrete until the concrete has reached a compressive strength of 2000 psi.

3.3.1.4 The concrete shall be presumed to have attained the specified strength for form removal when the requirements of ACI 301, Section 4.7 have been met.

3.3.1.5 Do not remove forms used for curing before the expiration of the required curing period.

3.3.2 Placing Reinforcement

3.3.2.1 Place, support and secure all reinforcement to prevent displacement from its required position. Reinforcement placing tolerances shall meet the requirements of ACI 301 Chapter 5. Bars shall be

tied securely to prevent displacement and all dowels shall be securely held in place prior to depositing concrete.

3.3.2.2 When necessary to move reinforcing bars to avoid interference with other reinforcement, conduits, or embedded items exceeding the specified placing tolerances, the resulting arrangement of bars shall be subject to acceptance by the Buyer.

3.3.3 Placing Concrete

Place concrete in accordance with ACI 301, Chapter 8, except as modified by the supplemental requirements herein.

3.3.3.1 Prepare concrete placement schedule for each concrete pour for Buyer's approval. The schedule should address the following items:

A. Pour number;

B. Extent of pour, plan and elevation views;

C. Volume of concrete;

D. Reference to applicable submitted concrete mix design, reinforcing steel placing drawings and formwork drawings;

E. Location of all embedded items such as plates, frames, pipe sleeves, inserts, conduit, anchor bolts and construction aids;

F. Openings;

G. Construction joint preparation and surfacing;

H. Materials and methods of curing;

I. Formwork removal timing and sequence.

3.3.3.2 Acceptance of formwork preparation and embedded items by the Buyer is required prior to concrete placement.

3.3.3.3 Do not use equipment made of aluminum alloys for pump lines, tremies, or chutes used to discharge concrete from a truck mixer.

3.3.3.4 Concrete shall not be cast against any frozen surface.

3.3.3.5 When the ambient temperature is below 40°F or expected to be below 40°F within 24 hours of concrete placement, the provisions of ACI 306R shall be followed.

9212413023 7

3.3.3.6 When the ambient temperature is above 90°F or expected to be above 90°F at time of concrete placement, the provisions of ACI 305R shall be followed.

3.3.3.7 Maintain a jobsite record of placed concrete. Record date, time, location, quantity, air temperature, concrete temperature, delivery slip number and cylinder sample numbers.

3.3.4 Concrete Finishing

3.3.4.1 Finish formed surfaces in accordance with ACI 301, Chapter 10, except as modified by the supplemental requirements herein.

3.3.4.2 Formed surfaces not noted above and not exposed to earth shall have a "smooth form finish."

3.3.4.3 Formed surfaces exposed to earth may have a "rough form finish."

3.3.5 Slabs

3.3.5.1 Construct slabs in accordance with ACI 301, Chapter 11, except as modified by the supplemental requirements herein.

3.3.5.2 Slabs shall have a "trowelled finish" with surface flatness maintained within 1/8 inch in 10 feet, as determined by a 10 foot straightedge placed anywhere on the slab in any direction.

3.3.5.3 Finished slab elevations shall be within plus or minus three-sixteenths of an inch of the specified elevation unless noted otherwise on the Contract Drawings.

3.3.6 Curing and Protection

Cure and protect concrete in accordance with ACI 301, Chapter 12.

A cure-seal-hardening compound shall be applied to all floor slabs.

3.3.7 Repair of Surface Defects

3.3.7.1 Repair of surface defects shall be performed only with the approval of the Buyer and shall be performed in accordance with ACI 301, Chapter 9.

3.3.8 Concrete Anchors

3.3.8.1 Location of concrete anchors, anchor quantity, anchor diameter and anchor type shall be as shown on the Contract Drawings.

3.3.8.2 Anchors shall be installed plumb and within 1/16 inch of the position shown on the Contract Drawings.

3.3.8.3 Review and comply with the manufacturer's printed instructions and the current ICBO Evaluation Report for the drilled anchors selected for use on this project, the Contract Drawings and this specification prior to commencing with the installation of any drilled anchors. Resolve any conflicts with the Buyer.

3.3.8.4 The manufacturer's representative shall attend on-site meetings to assure that all the installation procedures are in accordance with the manufacturer's instructions as modified by the applicable ICBO Evaluation Report. The representative shall remain at the jobsite until the Buyer is assured that the correct installation procedures are being followed and the warranty is not in jeopardy. The Buyer shall be advised if the manufacturer's representative recommends anything contrary to this specification.

3.3.8.5 Personnel assigned to install drilled anchors shall receive training from the manufacturer prior to proceeding with work.

3.3.8.6 Do not install drilled anchors in concrete that has not reached its 28 day compressive strength.

3.3.8.7 When drilling holes for the installation of drilled anchors some rebar cutting may be necessary and is permitted. The Seller shall use proper drilling tools.

3.3.9 Grouting

3.3.9.1 Review and comply with the manufacturer's printed instructions accompanying the material selected for use on this project, the Contract Drawings, the installation instructions given on vendor equipment drawings, and this specification prior to commencing any grouting. Resolve any conflict among these with the Buyer.

3.3.9.2 Storage handling, mixing, application, finishing and curing of grouting materials shall be in accordance with the manufacturer's printed instructions.

3.3.9.3 When placing grout, the temperature of the concrete, equipment bases, anchor bolts and grout material shall be within the temperature range of 40°F to 90°F as determined by a surface thermometer. Maintain this temperature for 3 days following grouting.

3.3.9.4 Grouting of equipment bases shall meet the following additional requirements:

Place grout only along one side of the equipment base and through a flume mounted on the formwork in a manner which minimizes trapped air and bubble formation. The use of vibrators to increase the placability of the grout is not permitted. The use of steel straps to move grout into position is permitted. Chaining is not permitted because of air-entrainment between the links.

Continue placing of grout until it oozes out along the entire perimeter and fills up to the required elevation.

3.4 **FIELD QUALITY CONTROL**

3.4.1 General

3.4.1.1 The Buyer will be responsible for the field testing of concrete to determine the work is performed in conformance to this specification and drawings.

3.4.1.2 Prior to the placement of any cast-in-place concrete the Seller shall meet with the Buyer and a representative from the testing agency designated by the Buyer. A procedure shall be developed for the gathering, handling and transporting of the required samples by the testing agency and for the submittal of the test results to the Buyer.

3.4.1.3 The responsibilities and duties of the Seller are as defined in ACI 301, Section 16.7.

3.4.2 Concrete Testing

3.4.2.1 Sampling and testing of concrete shall be in accordance with ACI 301, Chapter 16, except as modified by the supplemental requirements herein.

3.4.2.2 Concrete test samples shall be taken at or near the point of final deposit.

3.4.2.3 Concrete slump tests shall meet the requirements of ASTM C143. Perform a slump test concurrently with the preparation of molded test cylinders.

3.4.2.4 Concrete air content tests shall meet the requirements of ASTM C173. Perform air content tests concurrently with the preparation of molded test cylinders.

3.4.2.5 Molded cylinders for compression tests shall be prepared in sets of three meeting the requirements of ASTM C31. Composite samples shall be secured in accordance with ASTM C172. Each sample shall be obtained from a different batch of concrete on a random basis.

Curing shall meet the requirements of ASTM C31 for the standard 7 day and 28 day tests.

3.4.2.6 The minimum sampling frequency shall be one set for each 100 cubic yards, or fraction thereof, per day for each mix design.

3.4.2.7 Compression testing of cylinders shall meet the requirements of ASTM C39. Test each set of three cylinders as follows:

A. One cylinder at 7 days.

B. The remaining two cylinders at 28 days.

C. The acceptance test results shall be the average of the two specimens tested at 28 days per ACI 301, Paragraph 16.3.4.3.

3.4.3 Drilled Anchors Testing

3.4.3.1 A minimum of 10 percent of the installed anchors for each diameter shall be tension tested.

3.4.3.2 Anchors shall be tensioned to one and one-half times the allowable tension values indicated in appropriate ICBO evaluation report.

3.4.3.3 Tested anchors shall be considered acceptable if during testing the concrete did not spall, the anchor did not break, the anchor did not migrate more than 1/8 inch, and the anchor did not become loose. If any anchor in a group assembly is not acceptable, all other anchors in the group shall be tested. The Seller shall notify the Buyer of any anchors that failed the test and the proposed remedial action.

3.4.3.4 Tension test reports shall include, as a minimum, the date of test; description of tested anchor(s), including location, equipment/support number, diameter, and manufacturer; description of tension test procedure, including equipment used and rate of loading; and pertinent observations regarding acceptance criteria.

3.4.4 Grout Testing

The Seller shall verify the nonshrink properties of the grout when the first shipment arrives at the site. Two 6 inch by 12 inch concrete test cylinders shall be filled with the mixed grout, screeded off, and a baseplate with anchor bolt holes, placed on top of one cylinder. The uncovered cylinder shall be placed on top of the baseplate simulating the restraint of machinery. After 14 days, the top cylinder shall be removed. If the grout is non-shrink, it shall have risen over the top edge of the top cylinder. When an attempt is made to lift the plate from the lower cylinder, the plate shall be found to be bonded to the grout. If either of

9 2 1 2 4 1 3 0 2 4 1

these situations do not occur, the grout shall be rejected. The Seller shall notify the Buyer of the above testing.

3.4.5 Inspection

3.4.5.1 The Seller shall inspect reinforcing bar placement, concrete cover, formwork preparation and position of embedded items and anchor bolts for compliance with the Contract Drawings prior to the placement of the concrete.

3.4.5.2 The concrete shall be inspected immediately upon the removal of the forms for honeycombs or embedded debris. Repair surface defects per Paragraph 3.3.7.

3.4.5.3 The Buyer will conduct field inspections to ascertain that drilled anchors are installed and tested by trained and qualified personnel in accordance with the manufacturer's instructions and the applicable ICBO Evaluation Report.

3.4.5.4 The Buyer will conduct field inspections to ascertain all grouting of equipment and baseplates as specified on Contract Drawings have been properly done.

3.4.5.5 All drilled anchors will require Special Inspection. The special inspector must be on jobsite during anchor installation to verify anchor type, anchor dimension, concrete compressive strength, predrilled hole dimensions, anchor spacing, embedment and tightening torque.

3.4.6 Evaluation and Acceptance

The evaluation and acceptance of the concrete work shall meet the requirements of ACI 301, Chapters 17 and 18.

END OF SECTION

THIS PAGE INTENTIONALLY
LEFT BLANK

SECTION 05060
WELDING STRUCTURAL
(SAFETY CLASS 3, RATED FOR SAFETY CLASS 1 DBE)

PART 1 GENERAL

1.1 SUMMARY

This specification defines the welding, examination and testing requirements for shop and field fabrication of structural shapes, tubular components and plates.

1.2 REFERENCES

The publications listed below form a part of this specification to the extent referenced. The publications are referred to in the text by the basic designation only.

AMERICAN NATIONAL STANDARDS INSTITUTE (ANSI)

ANSI Z49.1	1988 Safety in Welding and Cutting

AMERICAN SOCIETY FOR TESTING AND MATERIALS (ASTM)

ASTM E10	1984 Tests for Brinell Hardness of Metallic Materials
ASTM E110	1982 Test for Indentation Hardness of Metallic Materials by Portable Hardness Testers

AMERICAN SOCIETY OF MECHANICAL ENGINEERS (ASME)

ASME Section II, Part C	1989 Welding Rods, Electrodes, and Filler Metals
ASME Section IX	1989 Qualification Standard for Welding and Brazing Procedures, Welders, Brazers, and Welding and Brazing Operation

AMERICAN SOCIETY OF NONDESTRUCTIVE TESTING (ASNT)

ASNT SNT-TC-1A	1988 Recommended Practice

AMERICAN WELDING SOCIETY (AWS)

AWS A2.4	1986 Standard Symbols for Welding, Brazing and Nondestructive Examination
AWS A3.0	1989 Welding Terms and Definitions
AWS D1.1	1990 Structural Welding Code
AWS D1.3	1989 Structural Welding Code - Sheet Steel
AWS QC1	1988 Standard and Guide for Qualification and Certification of Welding Inspectors

1.3 **SUBMITTALS**

Submit the following in accordance with the Vendor Drawing and Data Requirements section of the Order/Subcontract.

1.3.1 Welding Procedure Specifications, Procedure Qualification Records, and Welder Performance Qualifications shall be submitted and conform to the requirements of AWS D1.1, AWS D1.3, or Section IX of the ASME and to the requirements of this specification.

1.3.2 All Welding Procedure Specifications, Procedure Qualification Records, and Welder Performance Qualifications for purchased items contracted by the Seller shall be submitted to the Buyer after review and concurrence by the Seller.

1.3.3 The Seller's Subcontractor NDE Certification of personnel and NDE procedures for field fabrication or shop fabricated items shall be submitted after review and concurrence by the Seller. Fabrication shall not start until these documents are returned to the Seller with authorization to proceed.

1.3.4 AWS QC1 inspector certifications.

1.3.5 The Seller shall submit a weld filler material control procedure.

The weld filler material control procedure must include as a minimum the following information:

A. Procedure for the storage and handling of electrodes, filler metal and fluxes to the Buyer for review prior to the start of fabrication. The procedure shall include moisture, cleanliness, identification and disposal of contaminated and partially used material.

B. Methods of control (by heat or lot number and welder identification number) from receipt of material to consumption during fabrication. The control and disposal of contaminated and partially used material shall be included.

C. Weld filler materials of different specifications shall be sorted separately. Indicate the maximum time that low hydrogen electrodes will be exposed to ambient temperature and bake time and temperatures required prior to use of exposed electrodes.

D. Identify the responsible individuals who will administer and implement the procedure.

1.3.6 Seller's literature describing each type of welding stud and arc shields and manufacturer's data for qualification of stud bases.

1.3.7 Certified Material Test Reports (CMTRs), chemical and physical analysis, for weld filler materials and materials for stud bases, shall be submitted prior to utilization.

1.3.8 Weld repair procedures.

1.3.9 On completion of all work, final weld examination and inspection reports including visual NDE reports.

1.3.10 Records of stress relief heat treatments.

PART 2 PRODUCTS

2.1 MATERIALS AND EQUIPMENT

2.1.1 Matching weld filler materials shall be as specified in AWS D1.1, Table 4.1 or ASME Section II, Part C. For welding carbon steel a minimum 70 ksi welding filler materials shall be used.

2.1.2 Weld filler materials for similar weld joints shall be used so that the principal elements in the deposited weld metal shall be of the same nominal composition as the base metal.

2.1.3 Solid wires for automatic welding processes shall contain the principal elements required for the deposited weld metal.

2.1.4 Fluxes that the flux manufacturer recommends for single pass shall not be used for multiple pass welds.

2.1.5 After opening shipping containers of electrodes, fluxes and other welding materials, storage and handling shall be as specified in the Seller's approved filler material control procedure following the guidelines of AWS D1.1 and ASME Section II, Part C and the filler metal manufacturer's recommendations.

2.1.6 Tack welds shall be made with the same type of electrode filler wire that is used for the root pass. Tack welds in open butt joints shall be feathered into surrounding material.

2.1.7 Backup rings or strips, when required on the Contract Drawings, shall be of the same nominal composition as the base material.

2.1.8 Submerged arc welding shall be performed using the same name brand flux and the same name brand of AWS-ASME classification wire as used for the procedure qualifications.

2.2 FABRICATION AND MANUFACTURE

2.2.1 General Requirements

2.2.1.1 Fabrication to this specification shall conform to the requirements of AWS D1.1 Section 8 and/or AWS D1.3 as applicable. Compliance with this specification and authorization of Welding Procedure Specifications and Procedure Qualification Records shall in no way relieve the Seller of the responsibility of providing welds which are sound and suited to the services for which they are intended.

2.2.1.2 Welding and nondestructive test symbols shall be in accordance with AWS A2.4.

2.2.1.3 Welding terms and definitions shall be in accordance with AWS A3.0.

2.2.1.4 Cleanliness shall be maintained during welding. All flux, slag, and other foreign material shall be removed from the weld area.

2.2.1.5 Safety measures for the protection of welders and operators involved in welding and cutting shall be in accordance with he practices specified in the ANSI Z49.1, plus all local, state, federal and other governing regulations.

2.2.1.6 Qualification of stud bases shall be in accordance with AWS D1.1, Section 7, 7.1(3), 7.2.4 and 7.2.6.

2.2.1.7 Each welder shall be assigned an identification number, letter or symbol which shall be used to identify his work.

2.2.2 Welding Qualifications

2.2.2.1 Welding procedures, welders, welding operators and tackers shall be qualified in accordance with AWS D1.1 and/or AWS D1.3 for carbon steel and ASME Section IX for stainless steel where applicable. ASME Section IX, Welder Performance Qualification, may be used in lieu of AWS D1.1 qualifications.

2.2.2.2 At the request of the Buyer, any welder shall be retested and recertified when the work of the welder creates a reasonable doubt as to the quality of his workmanship.

2.2.2.3 The format of welding procedure specifications, including prequalified welding procedures, welding procedure qualification records, and nondestructive inspection reports shall be in accordance with AWS D1.1, Appendix E or ASME IX, Appendix A or equivalent.

2.2.2.4 Welding shall not start until Welding Procedure Specifications, including Prequalified Specifications, Procedure Qualification Records, Weld Repair Procedure, and Welder Performance Qualifications are returned to the Seller, from the Buyer, with authorization to proceed. Weld performed by procedures or personnel differing from those authorized are subject to complete removal.

2.2.3 Acceptable Welding Processes

2.2.3.1 Welding may be achieved by any one or combination of the following welding processes:

Welding Process	AWS Letter Designation
Shielded Metal Arc Welding	SMAW
Flux-Cored Arc Welding	FCAW
Stud Welding	SW
Manual and Automatic Gas Tungsten Arc Welding	GTAW
Automatic Submerged Arc Welding	SAW

2.2.3.2 Other welding processes, such as Gas Metal Arc Welding and Manual Submerged Arc require specific written authorization by the

Buyer's Welding Engineer. Submit all pertinent data and intended application of said process for evaluation.

PART 3 EXECUTION

3.1 PREPARATION

3.1.1 Weld joint preparation shall be made by machining, grinding, or thermal cutting. When thermal cutting is performed, the joint surfaces shall be ground to sound metal prior to welding.

3.1.2 For structural tubular welds, longitudinal weld seams shall be parallel to the longitudinal axis and shall be complete (100 percent) penetration butt welds. Longitudinal seams of adjoining rolled plate shall not be in line but shall be offset from other longitudinal seams by at least five (5) times the wall thickness of the tubular component.

3.1.3 Permanent backup strips are not permitted without specific written authorization from the Buyer. If temporary backup strips are used and then removed, the weld area shall be dressed and examined for cracks and other defects.

3.1.4 The parts to be joined shall meet the assembly requirements of AWS D1.1, Section 3.3.

3.1.5 All surfaces to be welded shall be free of paint, oil, dirt, scale, oxides and other foreign materials detrimental to weld soundness.

3.1.6 For stainless steel, wire brush and clean joint edges and adjacent surfaces to be welded with an ethyl alcohol or acetone dampened lint free cloth before the start of welding.

3.1.7 Wire brushes used on stainless steel welds shall be made of austenitic stainless steel. Clearly mark mechanical cleaning tools used on stainless steel, such as grinding wheels, files, deburring tools, and wire brushes. Marking shall identify tools to be used on stainless steel only and be visible while tool is in use.

3.1.8 Stainless steel welds made by inert gas shielded methods shall be fully back-purged, except where precluded by the physical arrangement, and nozzle gas shall be used in sufficient quantity to prevent oxidation on either side of the weld.

9 2 1 2 4 1 3 0 2 4 8

3.2 **INSTALLATION, APPLICATION AND ERECTION**

3.2.1 All welds shall be made as shown on Contract Drawings and Seller's fabrication drawings.

3.2.2 Preheat and Interpass Temperature Control

The minimum preheat and interpass requirements shall be as required by AWS D1.1, Paragraphs 4.2 and 4.3.

3.2.3 Flux, weld spatter and any slag shall be removed from each weld bead prior to depositing each succeeding pass.

3.2.4 Welding starts and stops in continuous welds shall be held to a minimum. Each such stop shall be properly conditioned before continuing the welding. The use of starting and stopping plates, where possible, is recommended.

3.2.5 Stress Relief Heat Treatment

3.2.5.1 When required by Contract Drawings, welded assemblies shall be stress-relieved by heat treating.

3.2.5.2 All shop welded ferritic steel members with butt welds greater than 1-1/4 inch in thickness, or with double fillet welds exceeding 7/8 inch leg dimensions, shall be stress relieved by heat treating.

3.2.5.3 Stress relief heat treatment shall be in accordance with AWS D1.1, Section 4.4 except that the alternate stress relief times and temperatures permitted by Table 4.5 shall not be used.

3.2.5.4 All finish machining required shall be done after heat treatment.

3.2.6 Inspection and Nondestructive Examination

Specific nondestructive examination shall be performed as required by Specification Section 05120 - Structural Steel, and Seller's fabrication drawings. Nondestructive examination methods, acceptance criteria, and additional general requirements shall be in accordance with the following subparagraphs. All nondestructive examination, except visual examination, shall be performed by personnel certified in accordance with ASNT SNT-TC-1A. Level II or Level III personnel shall be used to interpret results. Level II NDE personnel shall be qualified by Level III NDE personnel, qualified for the specific examination method.

3.2.7 Inspection

A. All phases of operations from approval of materials through acceptance of welds shall be inspected by the Seller's welding inspector.

B. The welding inspector shall be qualified and certified in accordance with AWS QC1. Visual examinations shall be performed by Level I, II or III NDE personnel.

C. All weld inspection reports shall be submitted per Section 1.3.9.

3.2.8 Visual Examination

A. Visual examination shall be performed in accordance with AWS D1.1, Section 6.

B. The Seller shall visually inspect all completed welds in accordance with AWS D1.1, Section 8.15.1 for statically loaded structures, Section 9.25.1 for dynamically loaded structures, Section 10.17.1 for tubular structures or AWS D1.3, Section 4.5, whichever is applicable. Weld profiles shall be in accordance with Figure 3.4 of AWS D1.1. Defective welds shall be repaired in accordance with the Seller's approved weld repair procedures.

3.2.9 Liquid Penetrant Examination

Liquid penetrant examination shall be in accordance with AWS D1.1, Section 6.7.7, when required by the Contract Drawings. Acceptance criteria shall be in accordance with AWS D1.1, Section 8.15.5 for statically loaded structures, Section 9.25.4 for dynamically loaded structures or Section 10.17.5 for tubular structures, whichever is applicable.

3.2.10 Magnetic Particle Examination

Magnetic particle examination shall be in accordance with AWS D1.1, Section 6.7.6, when required by the Contract Drawings. Acceptance criteria shall be in accordance with AWS D1.1, Section 8.15.5 for statically loaded structures, Section 9.25.2 for dynamically loaded structures or Section 10.17.5 for tubular structures, whichever is applicable.

3.3 **FIELD QUALITY CONTROL**

Inspection and examination to be in accordance with Paragraphs 3.2.6 through 3.2.12.

9 2 1 2 4 1 3 0 2 5 0

3.4 **ADJUSTMENTS**

3.4.1 Weld Repairs

3.4.1.1 All weld repairs shall be performed in accordance with the approved weld repair procedures.

3.4.1.2 Unacceptable indications shall be completely removed by chipping, gouging, grinding, or other authorized methods (for the type of material being repaired) to clean, sound metal, and the excavated areas shall be examined by the magnetic particle or liquid penetrant method to assure complete removal of defects.

3.4.1.3 The repaired areas shall be reexamined using the same inspection procedures by which the defect was originally detected and all other inspection called out for the particular weld.

3.4.1.4 Two repair attempts will be allowed on any one defective areas. No further attempts to repair shall be carried out without the authorization of the Buyer.

END OF SECTION

THIS PAGE INTENTIONALLY
LEFT BLANK

SECTION 05061
WELDING - TANKS
(SAFETY CLASS 3, RATED FOR SAFETY CLASS 1 DBE)

PART 1 GENERAL

1.1 SUMMARY

This specification defines the welding, thermal treatment, examination and testing requirements for shop and field fabrication of storage tanks.

1.2 REFERENCES

The publications listed below form a part of this specification to the extent referenced. The publications are referred to in the text by the basic designation only.

AMERICAN NATIONAL STANDARDS INSTITUTE (ANSI)

ANSI Z49.1	1988 Safety in Welding and Cutting

AMERICAN PETROLEUM INSTITUTE (API)

API 620	1990 Recommended Rules for Design and Construction of Large, Welded, Low Pressure Storage Tanks
API 650	1988 Welded Steel Tanks for Oil Storage

AMERICAN SOCIETY OF MECHANICAL ENGINEERS (ASME)

ASME Section II, Part C	1989 Welding Rods, Electrodes, and Filler Metals
ASME Section V	1989 Nondestructive Examination
ASME Section VIII, Div. 1	1989 Pressure Vessels
ASME Section IX	1989 Qualification Standard for Welding and Brazing Procedures, Welders, Brazers, and Welding and Brazing Operators

AMERICAN SOCIETY OF NONDESTRUCTIVE TESTING (ASNT)

ASNT SNT TC-1A	1988 Recommended Practice

AMERICAN SOCIETY FOR TESTING AND MATERIALS (ASTM)

ASTM A262	1984 Specification for Standard Practice for Detecting Susceptibility to Intergranular Attack in Austenitic Stainless Steels
ASTM E10	1984 Tests for Brinell Hardness of Metallic Materials
ASTM E110	1982 Test for Indentation Hardness of Metallic Materials by Portable Hardness Testers

AMERICAN WATER WORKS ASSOCIATION (AWWA)

AWWA D100	1984 Welded Steel Tanks for Water Storage

AMERICAN WELDING SOCIETY (AWS) PUBLICATIONS

AWS A2.4	1986 Symbols for Welding, Brazing and Nondestructive Examination
AWS A3.0	1989 Welding Terms and Definitions
AWS QC1	1988 Standard and Guide for Qualification and Certification of Welding Inspectors

NATIONAL FIRE PROTECTION ASSOCIATION (NFPA)

NFPA 22	1989 Standard for Water Tanks for Private Fire Protection

1.3 **SUBMITTALS**

Submit the following in accordance with the Vendor Drawing and Data Requirements section of the Order/Subcontract.

1.3.1 Welding Procedure Specifications (ASME Form QW-482 or equivalent), Procedure Qualification Records (ASME Form QW-483 or equivalent), or Welder Performance Qualifications (ASME Form QW-484 or equivalent) conforming to the requirements of ASME Section IX and to the requirements of this specification. Submittals shall include a brief summary of the application of individual procedures with regard to types of joints and piping material sections.

1.3.2 The Seller's Subcontractor NDE Certification of personnel and NDE procedures for shop fabricated items shall be submitted after review and concurrence by the Seller. Fabrication shall not start until these documents are returned to the Seller with authorization to proceed.

1.3.3 The Seller shall submit a weld filler material control procedure.

The weld filler material control procedure must include as a minimum the following information:

A. Procedure for the storage and handling of electrodes, filler metal and fluxes to the Buyer for review prior to the start of fabrication. The procedure shall include moisture, cleanliness, identification and disposal of contaminated and partially used material.

B. Methods of control (by heat or lot number and welder identification number) from receipt of material to consumption during fabrication. The control and disposal of contaminated and partially used material shall be included. All electrodes and electrode stubs shall be accounted for (e.g., same number of electrodes checked out shall equal the number of electrode/stubs checked in.

C. Weld filler materials of different specifications shall be sorted separately. Indicate the maximum time that low hydrogen electrodes will be exposed to ambient temperature.

D. Identify the responsible individuals who will administer and implement the procedure.

1.3.4 Certified Material Test Reports (CMTRs), chemical and physical analysis, for weld filler materials shall be submitted prior to utilization.

1.3.5 Weld repair procedures.

1.3.6 Final weld examination and inspection reports including visual NDE reports and radiography film.

1.3.7 AWS QC1 inspector certifications.

1.3.8 Weld Maps shall specifically identify each weld joint and procedure to be used.

1.3.9 Record of stress relief heat treatments.

1.3.10 Fabrication traveler identifying Buyer's purchase order number, weld inspection hold points, weld repair and technique, NDE inspection requirements, weld operator ID number and filler metal.

PART 2 PRODUCTS

2.1 MATERIALS AND EQUIPMENT

2.1.1 Weld filler materials shall be as specified in ASME Section II, Part C.

2.1.2 Weld filler materials for similar weld joints shall be used so that the principal elements in the deposited weld metal shall be of the same nominal composition as the base metal.

2.1.3 Solid wires for automatic welding processes shall contain the principal elements required for the deposited weld metal. Welds deposited by the submerged arc process shall not derive any principal element from the flux.

2.1.4 Fluxes that the flux manufacturer recommends for single pass shall not be used for multiple pass welds.

2.1.5 After opening shipping containers of electrodes, fluxes and other welding materials, storage and handling shall be as specified in the Seller's approved filler material control procedure following the guidelines of ASME Section II, Part C.

2.1.6 Submerged arc welding shall be performed using the same name brand flux and the same name brand of AWS-ASME classification of wire as used for the procedure qualification.

2.1.7 Tack welds shall be made with the same type of electrode filler wire that is used for the root pass. Tack welds in open butt joints shall be feathered into surrounding material.

2.1.8 Filler wires in Specification ASME/AWS SFA-5.2 shall not be used for welding with gas tungsten arc process.

2.1.9 Low hydrogen electrodes shall be used for all shell course and pressure retaining welds. For welds on 70 ksi or greater tensile strength material, electrodes shall be stored in 200-300°F ovens prior to use. For non-pressure fillet welds of bottom plates and roof plates, E6010, E6011, E6012, E7024, or E7028 may be used.

2.2 FABRICATION AND MANUFACTURE

2.2.1 General Requirements

2.2.1.1 Fabrication to this specification shall conform to the requirements of the applicable code of API 620, API 650, AWWA D100 and/or NFPA 22. Compliance with this specification and authorization of Welding Procedure Specifications and Procedure Qualification

Records shall in no way relieve the Seller of the responsibility of providing welds which are sound and suited to the services for which they are intended.

2.2.1.2 Welding and nondestructive test symbols shall be in accordance with AWS A2.4.

2.2.1.3 Each welder shall be assigned an identification number, letter, or symbol which shall be used to identify his work.

2.2.1.4 Welding terms and definitions shall be in accordance with AWS A3.0.

2.2.1.5 Cleanliness shall be maintained during welding. All flux, slag, and other foreign material shall be removed from the weld area.

2.2.1.6 Safety measures for the protection of welders and operators involved in welding and cutting shall be in accordance with the practices specified in the ANSI Z49.1, plus all local, state, federal and other governing regulations.

2.2.1.7 Peening is only permitted to the extent necessary to clean slag from the weld.

2.2.1.8 All arc strikes, weld spatter, burrs, etc., shall be removed/ground out in their entirety and blended smoothly with the tank surface.

2.2.1.9 Fabrication aids, temporary supporting lugs, etc., that are removed by gouging or cutting shall not be cut closer than .125 inch from the tank surface. The remaining material shall then be ground flush with the base metal. The ground area shall be inspected for possible cracks or porosity by liquid penetrant or magnetic particle examination, whichever is applicable.

2.2.1.10 The attachment of nozzles, lugs, support rings and similar items when possible shall not be located on a weld seam. Prior engineering authorization is required if attachment is to be located on a weld seam.

2.2.1.11 The Seller must conduct all NDE with the approval of the Buyer's representative.

2.2.2 Welding Qualifications

2.2.2.1 Welding Procedure Specification (ASME Form QW-482 or equivalent), Procedure Qualification Records (ASME Form QW-483 or equivalent), and Welder's Performance Qualification (ASME Form QW-484 or

equivalent) shall conform to the requirements of Section IX of the ASME Code, API 650 Section 7, API 620 Section 4.7 or AWWA D100 Section 8, whichever is applicable, and this specification.

2.2.2.2 All Welding Procedures and Qualification Records for purchased items subcontracted by the Seller shall be reviewed by the Seller for content and contract compliance, prior to submittal to the Buyer.

2.2.2.3 Welder's Performance Qualification Records shall be made available for the Buyer, upon request.

2.2.2.4 Welding Procedure Specifications and Procedure Qualification Records requiring mechanical testing shall meet the requirements of Section 3.2.8 of this specification.

2.2.2.5 Welds that are deposited by procedures differing from those authorized shall be rejected and completely removed at Seller's cost.

2.2.2.6 At the request of the Buyer, any welder shall be retested and recertified when the work of the welder creates a reasonable doubt as to his workmanship.

2.2.2.7 Welding shall not start until Welding Procedure Specifications, Procedure Qualification Records, weld repair procedure, and Welder Performance Qualifications are returned to the Seller, from the Buyer, with authorization to proceed.

2.2.3 Acceptable Welding Processes

2.2.3.1 Welding may be achieved by any one or combination of the following welding processes:

Welding Process	AWS Letter Designation
Shielded Metal Arc Welding	SMAW
Gas Tungsten Arc Welding	GTAW
Automatic Submerged Arc Welding	SAW

2.2.3.2 Other welding processes, such as Gas Metal-Arc Welding, Manual Submerged Arc, Electroslag, and processes employing flux cored electrodes require specific written authorization by Buyer. Submit all pertinent data and intended application of said process for evaluation.

PART 3 EXECUTION

3.1 PREPARATION

3.1.1 Weld joint preparation shall be made by machining, grinding, or thermal cutting. When thermal cutting is performed, the joint surfaces shall be ground to sound metal prior to welding. Oxy-fuel thermal cutting shall not be used for joint preparation of stainless steel.

3.1.2 All weld joint design, alignment and fit-up shall be in accordance with the applicable code (API 650 Section 3.1.5, API 620 Section 3.22 and 4.14 and/or AWWA D100 Section 10.8).

3.1.3 Permanent backup rings are not permitted without specific written authorization from the Buyer. If temporary backup rings are used and then removed, the weld area shall be dressed and examined for cracks and other defects. Examination of the weld surfaces shall be performed visually and by the magnetic particle or liquid penetrant method.

3.2 INSTALLATION, APPLICATION AND ERECTION

3.2.1 Bottom plates shall be welded in a sequence that will result in the least amount of distortion to provide, as nearly as possible, a plane surface.

3.2.2 The parts to be joined by fillet welds shall be brought together as closely as practicable. The gap between facing surfaces of lap joints should not exceed .062 inch. If the separation is greater than .062 inch after straightening and assembly, the leg of the fillet weld shall be increased by the amount of separation but shall not exceed .196 inch increase.

3.2.3 All welds shall be made as shown on Contract Drawings and Seller's fabrication drawings.

3.2.4 Flux, weld spatter and any slag shall be removed from each weld bead prior to depositing each succeeding pass.

3.2.5 Thermal Treatment

3.2.5.1 Preheat and interpass temperature control shall be in accordance with API Standard 620, Appendix H or API Standard 650, Paragraph 5.2.1.2 and/or AWWA D100 Section 10.4, whichever is applicable. For stainless steel and nonferrous alloys maximum interpass temperature limits shall be specified.

3.2.5.2 Postweld heat treatment (PWHT) shall be in accordance with API Standard 620 Section 4.18, or API Standard 650, Paragraph 2.2.7, whichever is applicable.

3.2.5.3 Temperature monitoring shall be by use of pyrometers, thermocouple measuring devices or other means approved by the Buyer. Temperature measuring shall be accomplished in such a manner that no contaminants or residues of any nature can reach the weld zone.

3.2.5.4 A maximum of two complete postweld heat cycles is permitted for each weld. Further PWHT cycles shall not be carried out without the authorization of Buyer's welding engineer.

3.2.6 Lap Welded Tank Bottoms

3.2.6.1 Two feet of lap weld shall be fabricated for test specimens. This test joint shall be made using the same fabrication (electrode, plate, and weld procedure) as used to make the production joint.

3.2.6.2 Three tensile test strips 3 inches by 18 inches shall be cut from the test weld. The minimum breaking load of the strips shall be at least 70 percent of the minimum ultimate strength of the unwelded plate. Each weld shall indicate at least 95 percent shear fracture.

3.2.6.3 Three cross sections of the test plate weldment shall be polished and etched sufficiently to show the weld's penetration into the base material. Full fusion shall exist throughout each cross section. If the first pass destroys the vertical edge of the lap weld, a minimum of 3/64 inch peak penetration into the bottom plate shall be shown. (See sketch below)

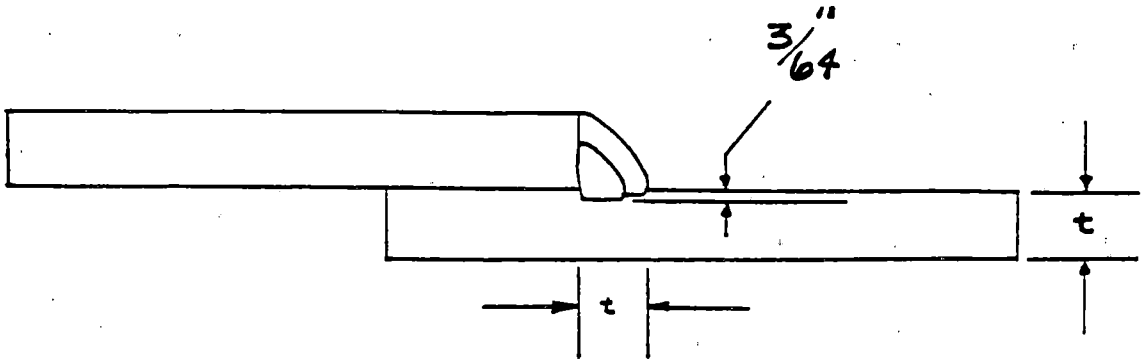

3.2.7 All shell joints shall be full penetration, double welded joints.

3.2.7.1 Shell to bottom fillet welds shall consist of two passes minimum, both sides.

3.2.8 Backup rings or strips, where permitted, shall be of the same chemical analysis as the base plate, except that for low alloy base plate the backup strip may be of low carbon steel.

3.2.9 After the removal of any temporary backup rings or strips, the weld area shall be dressed and examined using the magnetic particle or liquid penetrant method in accordance with Paragraphs 3.2.11.4 or 3.2.11.5 of this specification, whichever is applicable.

3.2.10 Bottom plates shall be welded in a sequence that will result in the least amount of distortion to provide, as nearly as possible, a plane surface.

3.2.11 Inspection and Nondestructive Examination

3.2.11.1 General Requirements

Specific nondestructive examination requirements for each material and material section shall be as noted in Attachment A. Nondestructive examination methods, acceptance criteria, and additional general requirements shall be in accordance with the following subparagraphs. All nondestructive examination, except visual examination, shall be performed by personnel certified in accordance with ASNT SNT-TC-1A.

A. A Level II or III, qualified to ASNT SNT-TC-1A, shall perform all NDE interpretations. The Buyer's Representative may witness any or all examinations with final authority on all NDE interpretations results.

B. Weld maps and a sample of a weld/NDE record shall be submitted to the Buyer 30 days prior to fabrication for information.

C. Weld numbers shall be identified for each pressure retaining component and attachment to pressure retaining components of the weld map and weld/NDE records. Do not reuse weld numbers.

D. All visual and NDE examinations that are performed shall be documented on the weld/NDE record and shall be kept current with daily inspection examinations.

E. The weld/NDE record shall identify the project and/or contract number, applicable weld identification drawing number, weld number, welder identification, weld procedure,

weld filler material (type), heat number traceability (where applicable). Visual weld examinations; fit-up, root pass, cover pass and any other examinations performed by examiner shall be dated and indicate the name and/or certification number of American Welding Society (AWS) QC1 welding inspector performing examination. Nondestructive examinations; ultrasonic, liquid penetrant, magnetic particle, radiography, leak testing, shall be dated and indicate the name and NDE certification level of examiner performing examination.

F. As built weld maps, completed weld/NDE records and supporting NDE reports shall be submitted within 30 days after completion of the system or component and prior to time of system pressure test.

3.2.11.2 Inspection

A. All phases of the welding operations from approval of materials through acceptance of welds shall be inspected by the Seller's welding inspector.

B. The Seller's welding inspector shall be qualified and certified in accordance with AWS QC1.

C. All weld inspection reports shall be maintained and submitted per Paragraph 1.3.6.

3.2.11.3 Visual Examination

A. Visual examination shall be performed in accordance with API 650 Section 5.3 and this specification.

B. Visual examinations shall be performed on accessible surfaces of all completed welds.

3.2.11.4 Magnetic Particle Examination

A. Magnetic particle examination shall be in accordance with the requirements and methods specified in ASME Code, Section V, Article 7 (Prod method).

B. The evaluation of indications and the acceptance criteria shall be in accordance with ASME Code, Section VIII, Division 1, Appendix 6, Paragraphs 6.3 and 6.4.

C. If arc burns occur during magnetic particle examination, the arc burns shall be removed and the area reexamined by the magnetic yoke method.

3.2.11.5 Liquid Penetrant Examination

A. Liquid penetrant examination procedures shall be in accordance with API 620, Paragraph 5.22, API 650 Section 6, Paragraph 6.4 and ASME Code Section V, Article 6.

B. Penetrant materials shall meet the requirements of ASME Code, Section V, Article 6, Paragraph T-625, for sulfur and halogen content regardless of the type of material to be examined.

C. Liquid penetrant examination of welds shall include a band of base metal at least 1 inch wide on each side of the weld.

D. The evaluation of indications and the acceptance criteria shall be in accordance with ASME Section VIII, Division 1, Appendix 8, Paragraphs 8.3 and 84.

3.2.11.6 Ultrasonic Examination

A. Ultrasonic examination procedures shall be in accordance with the requirements and methods specified in API 620, Paragraph 5.21, API 650, Paragraph 6.3 and the ASME Code, Section V, Article 5.

B. The acceptance criteria shall be in accordance with ASME Code, Section VIII, Division 1, Appendix 12, Paragraph 12.3.

3.2.11.7 Radiographic Examination

A. Radiographic examination shall be in accordance with the requirements and methods specified in ASME Code Section V, Article 2, API 650, Section 6.1, API 620, Section 5.16 and/or AWWA D100, Section 11.6, whichever is applicable.

B. The evaluation of indications and the acceptance criteria shall be in accordance with ASME Code Section VIII, Division 1, Paragraph UW-51(b).

C. All radiographic procedures, regardless of source, shall be verified by demonstration to the Buyer prior to production (the use of cobalt 60 is not permitted).

D. Equipment and materials used in all NDE applications shall be available for review and authorization by the Buyer prior to performance of examinations.

E. Each radiographic film shall identify the project number, in addition to requirement of ASME Code, Section V.

F. Radiographic reports shall list each radiographic examination view. Indicate location, acceptability or rejectability and note all discontinuities whether rejectable or not. When the report includes radiographs of welds which have been repaired, indicate which welds are repair welds and how many times each weld has been repaired.

G. If additional welding is performed on any weld area which has already been examined radiographically, this area is a repair area. Identify subsequent radiographs by "R-1, R-2," etc.

H. Submit all radiographs along with the original of the Radiography Test (RT) report to the Buyer for review and authorization within 24 hours after production radiographs are taken. For offsite fabrications, the Seller shall have original radiographs available for review and authorization by the Buyer prior to shipment.

3.2.12 Mechanical Testing of Welds

Mechanical Tests shall be conducted as required by the API Standard 620 or 650, the ASME Code, Section IX, and this specification. A Buyer's representative may witness the mechanical testing.

3.2.12.1 Brinell Hardness Testing (3000 kg load, 10 mm Ball)

Brinell hardness test shall be performed in accordance with ASTM E10 and E110 and to the requirements of Paragraphs 3.2.8.2 and 3.2.8.3 of this specification.

3.2.12.2 Procedure Qualifications (PQRs)

A. P1 Materials

1) Brinell hardness tests of the deposited weld and heat affected zone shall be required for procedure qualifications where automatic or semiautomatic welding procedures are used. Three tests shall be required in each area.

2) When postweld heat treatment is required, Brinell hardness tests shall be performed after postweld heat treatment.

3) Weld and heat affected zone hardness shall not exceed 225 Bhn.

3.2.12.3 Production Welds

A. P1 Materials

1) Brinell hardness tests of production welds shall be required where automatic or semiautomatic welding procedures are used. Where postweld heat treatment is specified, the final hardness tests shall be performed after postweld heat treatment. The hardness tests shall be performed as follows:

a. One hardness test for each longitudinal, circumferential and nozzle weld.

b. Weld hardness shall not exceed 225 Bhn.

3.2.12.4 Impact Testing (Charpy V-Notch)

Procedure qualification for welding materials having Charpy impact values shall require Charpy V-Notch impact tests of the weld metal and heat affected zone. Impact testing shall be performed in accordance with API Standard 620, Appendix Q or API Standard 650, Section 7 whichever is applicable.

3.3 **FIELD QUALITY CONTROL**

Inspection and examination to be in accordance with Paragraph 3.2.7.

3.4 **ADJUSTMENTS**

3.4.1 Weld Repairs

3.4.1.1 All weld repairs shall be performed in accordance with the approved weld repair procedure.

3.4.1.2 Unacceptable indications shall be completely removed by chipping, gouging, grinding, or other authorized methods (for the type of material being repaired) to clean, sound metal. Excavated areas shall be examined by the liquid penetrant method to assure complete removal of defects.

3.4.1.3 The repaired areas shall be reexamined using the same inspection procedures by which the defect was originally detected and all other inspection called out for the particular weld.

3.4.1.4 Two repair attempts will be allowed on any one defective areas. No further attempts to repair shall be carried out without the authorization of the Buyer.

THIS PAGE INTENTIONALLY
LEFT BLANK

ATTACHMENT A

WELD MAP DATA SHEET

BUYER'S PURCHASE ORDER NO. ITEM NO.

BUYER'S WELD SPECIFICATION NO.

1. Draw a single line sketch of the tank.
2. Identify each qualified welding procedure.

SKETCH

Seller
Address
Buyer's Purchase Order No.

This Form Completed By _____

Buyer's Welding Eng.
Review Block

Telephone No. _____

Revisions _____

Date _____

THIS PAGE INTENTIONALLY
LEFT BLANK

SPACE NO.	ACTION TO BE TAKEN
1	Enter the Purchaser's Purchase Order Number. A separate summary must be completed for each Purchase Order and suborder.
2	Enter the Purchaser's item number(s). The summary sheet must reflect all items of similar construction that will have common welding procedures. Items of markedly different materials or methods of Manufacture should be entered on separate WPS's.
3	Enter Manufacturer's name.
4	Enter Manufacturer's shop location where work will be performed.
5	Enter date summary is complied.
6	Enter Buyer's VIC serial number and revision.
7	Enter Welding Procedure Specification (WPS) number.
8	Enter Procedure Qualification Record (PQR) number(s) supporting the WPS.
9	Enter the welding process(es) used in performing (PQR).
10	Enter type of joint as referenced in Legend. Where (E) is used, state type of joint or overlay in space 17.
11	Enter ASME-ASTM materials to be used in fabrication.
12	Enter base metal thickness range qualified by PQR.
13	Enter post weld heat treatment information in appropriate box.
14	Enter other pertinent information in this space. Such as impacts, etc.
15	Enter current review status of weld procedure (Seller use only).
16	Enter date of current review status of weld procedure (Buyer's use only).
17	Enter any special design or process information regarding the item of construction in this box.

9 2 1 2 4 1 3 0 2 6 6

THIS PAGE INTENTIONALLY
LEFT BLANK

U.S. DEPARTMENT OF ENERGY
Hanford Waste Vitrification Plant
Richland, Washington
DOE Contract DE-AC06-86RL10838

FLUOR DANIEL, INC.
Advanced Technology Division
Fluor Contract 8457

Rev. D

WELDING PROCEDURE SUMMARY

Welding Storage Tanks

SERIAL NO.	PROCEDURE NO.	SUPPORTING PQR	PROCESS	JOINT TYPE	ASME-ASTM MATERIAL	THICKNESS QUALIFIED	PHWT		COMMENTS	STATUS	DATE
							YES	NO			
6	7	8	9	10	11	12	13		14	15	16

LEGEND

JOINT TYPE DESCRIPTION

- A Longitudinal Seam
- B Circumferential Seam
- C Pipe Seam
- D Nozzle Seam
- E Other (Explain in comments section)

REVIEW TYPE

- A Commence Fabrication
- B Commence Fabrication Submit w/Corrections
- C Do Not Fabricate

REMARKS:

17

MANUFACTURER: 3

SHOP LOCATION: 4 DATE: 5

P.O. NO.: 1 ITEM(S): 2

THIS PAGE INTENTIONALLY
LEFT BLANK

U.S. DEPARTMENT OF ENERGY
Hanford Waste Vitrification Plant
Richland, Washington
DOE Contract DE-AC06-86RL10838

FLUOR DANIEL, INC.
Advanced Technology Division
Fluor Contract 8457

Rev. D

WELDING PROCEDURE SUMMARY

Welding Storage Tanks

SERIAL NO.	PROCEDURE NO.	SUPPORTING PQR	PROCESS	JOINT TYPE	ASME-ASTM MATERIAL	THICKNESS QUALIFIED	PHWT		COMMENTS	STATUS	DATE
							YES	NO			

LEGEND

JOINT TYPE DESCRIPTION

- A Longitudinal Seam
- B Circumferential Seam
- C Pipe Seam
- D Nozzle Seam
- E Other (Explain in comments section)

REVIEW TYPE

- A Commence Fabrication
- B Commence Fabrication Submit w/Corrections
- C Do Not Fabricate

REMARKS:

MANUFACTURER: _____ SHOP LOCATION: _____ DATE: _____

P.O. NO.: _____ ITEM(S): _____

THIS PAGE INTENTIONALLY
LEFT BLANK

SECTION 05062
WELDING - PIPING

PART 1 GENERAL

1.1 SUMMARY

This specification defines the welding, thermal treatment, examination and testing requirements for shop and field fabricated piping.

1.2 REFERENCES

The publications listed below form a part of this specification to the extent referenced. The publications are referred to in the text by the basic designation only.

AMERICAN NATIONAL STANDARDS INSTITUTE (ANSI)

ANSI Z49.1	1988 Safety in Welding and Cutting

AMERICAN SOCIETY FOR TESTING AND MATERIALS (ASTM)

ASTM E10	1984 Tests for Brinell Hardness of Metallic Materials
ASTM E110	1982 Test for Indentation Hardness of Metallic Materials by Portable Hardness Testers

AMERICAN SOCIETY OF MECHANICAL ENGINEERS (ASME)

ASME Section II, Part C	1989 Welding Rods, Electrodes, and Filler Metals
ASME Section V	1989 Nondestructive Examination
ASME Section IX	1989 Qualification Standard for Welding and Brazing Procedures, Welders, Brazers, and Welding and Brazing Operators
ASME B31.1	1989 Power Piping
ASME B31.3	1990 Chemical Plant and Petroleum Refinery Piping

AMERICAN SOCIETY OF NONDESTRUCTIVE TESTING (ASNT)

ASNT SNT-TC-1A	1988 Recommended Practice

AMERICAN WELDING SOCIETY (AWS)

AWS A2.4	1986 Standard Symbols for Welding, Brazing and Nondestructive Examination
AWS A3.0	1989 Welding Terms and Definitions
AWS QC1	1988 Standard and Guide for Qualification and Certification of Welding Inspectors

NATIONAL FIRE PROTECTION ASSOCIATION

NFPA 24	1987 Standard for the Installation of Private Fire Service and Their Appurtenances

1.3 **SUBMITTALS**

Submit the following in accordance with the Vendor Drawing and Data Requirements section of the Order/Subcontract.

1.3.1 Welding Procedure Specifications (ASME Form QW-482 or equivalent, Procedure Qualification Records (ASME Form QW-483 or equivalent), or Welder Performance Qualifications (ASME Form QW-484 or equivalent) conforming to the requirements of ASME Section IX and to the requirements of this specification.

1.3.2 The Seller's Subcontractor NDE certification of personnel and NDE procedures for field fabrication or for shop fabricated items, shall be submitted after review and concurrence by the Seller. Fabrication shall not start until these documents are returned to the Prime Seller with authorization to proceed.

1.3.3 The Seller shall submit a weld filler material control procedure.

A weld filler material control procedure must include as a minimum the following information:

A. Procedure for the storage and handling of electrodes, filler metal and fluxes to the Buyer for review prior to the start of fabrication. The procedure shall include moisture, cleanliness, identification and disposal of contaminated and partially used material.

B. Methods of control (by heat or lot number and welder identification number) from receipt of material to consumption

9212413027 0

during fabrication. All electrodes and electrode stubs shall be accounted for (e.g., same number of electrodes checked out shall equal the number of electrode/stubs checked in).

C. Weld filler materials of different specifications shall be stored separately. Indicate the maximum time that low hydrogen electrodes will be exposed to ambient temperatures.

D. Identify the responsible individuals who will administer and implement the procedure.

1.3.4 Certified Material Test Reports (CMTRs), chemical and physical analysis, for weld filler materials shall be submitted prior to utilization.

1.3.5 Weld repair procedures.

1.3.6 Final weld examination and inspection reports including visual NDE reports and radiography film.

1.3.7 AWS QC1 inspector certifications.

1.3.8 Attachment A (Form E651) summarizing application of individual welding procedure with regards to types of joints and piping material line classes. Welding shall not start until these documents are returned to the Seller with authorization to proceed.

1.3.9 Record of stress relief heat treatment.

PART 2 PRODUCTS

2.1 MATERIALS AND EQUIPMENT

2.1.1 Weld filler materials shall be as specified in ASME Section II, Part C.

2.1.2 Weld filler materials for similar weld joints shall be used so that the principal elements in the deposited weld metal shall be of the same nominal composition as the base metal.

2.1.3 Solid wires for automatic welding processes shall contain the principal elements required for the deposited weld metal. Welds deposited by the submerged arc process shall not derive any principal element from the flux.

2.1.4 Fluxes that the flux manufacturer recommends for single pass shall not be used for multiple pass welds.

2.1.5 After opening shipping containers of electrodes, fluxes and other welding materials, storage and handling shall be as specified in the Seller's approved filler material control procedure following the guidelines of ASME Section II, Part C.

2.1.6 Submerged arc welding shall be performed using the same name brand flux and the same name brand of AWS-ASME classification of wire as used for the procedure qualification.

2.1.7 Tack welds shall be made with the same type of electrode filler wire that is used for the root pass. Tack welds in open butt joints shall be feathered into surrounding material.

2.1.8 Electrodes of the following classifications are not acceptable for pressure containing welds: E6012, E6013, E6014, E6020, E7020 and E7024.

2.1.9 Filler wires in Specification ASME/AWS SFA5.2 shall not be used for welding with Gas Tungsten Arc process.

2.1.10 Low hydrogen electrodes shall be used for all pressure retaining welds in NPS larger than 3 inches. For welds on 70 ksi or greater tensile strength material, electrodes shall be stored in 200-300°F ovens prior to use. E-6010 may be used for root pass only in P-1 carbon steels for NPS larger than 3 inches.

2.2 **FABRICATION AND MANUFACTURE**

2.2.1 General Requirements

2.2.1.1 Fabrication to this specification shall conform to the requirements of ASME Code, B31.1 or B31.3, whichever is applicable. Compliance with this specification and authorization of Welding Procedure Specifications and Procedure Qualification Records shall in no way relieve the Seller of the responsibility of providing welds which are sound and suited to the services for which they are intended.

2.2.1.2 Welding and nondestructive test symbols shall be in accordance with AWS A2.4.

2.2.1.3 Each welder shall be assigned an identification number, letter, or symbol which shall be used to identify his work.

2.2.1.4 Welding terms and definitions shall be in accordance with AWS A3.0.

2.2.1.5 Cleanliness shall be maintained during welding. All flux, slag, and other foreign material shall be removed from the weld area.

2.2.1.6 Safety measures for the protection of welders and operators involved in welding and cutting shall be in accordance with the practices specified in the ANSI Z49.1, plus all local, state, federal and other governing regulations.

2.2.1.7 Peening is only permitted to the extent necessary to clean slag from the weld.

2.2.1.8 All arc strikes, weld spatter, burrs etc., shall be removed/ground out in their entirety and blended smoothly with the pipe surface.

2.2.1.9 Fabrication aids, temporary supporting lugs, etc., that are removed by gouging or cutting shall not be cut closer than 1/8 inch from the pipe surface. The remaining material shall then be ground flush with the base metal. Grinding shall not reduce the pipe wall thickness below 0.875 times the nominal wall thickness. The ground area shall be inspected for cracks or porosity by liquid penetrant or magnetic particle examination, whichever is applicable.

2.2.1.10 The attachment of nozzles, lugs, support rings and similar items when possible shall not be located on a weld seam. Prior engineering authorization is required if attachment is to be located on weld seam.

2.2.1.11 Attachment A of this specification summarizes heat treatment, ASME Code Jurisdiction, inspection and nondestructive examination requirements for shop and field welds.

2.2.1.12 Piping requiring special cleaning shall have the root pass deposited with the gas tungsten arc process. The backside of the root pass shall be purged with inert gas.

2.2.2 Welding Qualifications

2.2.2.1 Welding Procedure Specifications (ASME Form QW-482 or equivalent), Procedure Qualification Records (ASME Form QW-483 or equivalent, Welder's Performance Qualifications (ASME Form QW-484 or equivalent) shall conform to the requirements of Section IX of the ASME Code and to the requirements of this specification.

2.2.2.2 All Welding Procedures and Qualification Records for purchased items subcontracted by the Seller shall be reviewed by the Seller for content and contract compliance, prior to submittal to the Buyer.

2.2.2.3 Welder's Performance Qualification Records shall be made available for the Buyer, upon request.

2.2.2.4 Welding Procedure Specifications and Procedure Qualification Records requiring mechanical testing shall meet the requirements of Section 3.2.5 of this specification.

2.2.2.5 Welding performed by procedures differing from those authorized shall be rejected and completely removed at Seller's cost.

2.2.2.6 At the request of the Buyer, any welder shall be retested and recertified when the work of the welder creates a reasonable doubt as to his workmanship.

2.2.2.7 Welding shall not start until Welding Procedure Specifications, Procedure Qualification Records, weld repair procedure, and Welder Performance Qualifications are returned to the Seller, from the Buyer, with authorization to proceed. Welds that are deposited by procedures or personnel differing from those authorized are subject to complete removal.

2.2.3 Acceptable Welding Processes

2.2.3.1 Welding may be achieved by any one or combination of the following welding processes:

Welding Process	AWS Letter Designation
Shielded Metal Arc Welding	SMAW
Manual and Automatic Gas Tungsten Arc Welding	GTAW
Automatic Submerged Arc Welding	SAW

2.2.3.2 Other welding processes, such as Gas Metal Arc Welding, Manual Submerged Arc, and processes employing flux cored electrodes require specific written authorization by the Buyer's welding engineer. Submit all pertinent data and intended application of said process for evaluation.

PART 3 EXECUTION

3.1 PREPARATION

3.1.1 Weld joint preparation shall be made by machining, grinding, or thermal cutting. When thermal cutting is performed, the joint surfaces shall be ground to sound metal prior to welding.

3.1.2 When welded joints involving two different pipe wall thicknesses are to be made, a 4 to 1 taper shall be made on the inside of the thicker pipe to avoid any detrimental mechanical notches in the piping system.

9212413027 4

3.1.3 Permanent backup strips are not permitted without specific written authorization from the Buyer. If temporary backup rings are used and then removed, the weld area shall be dressed and examined for cracks and other defects. Examination shall include visual, liquid penetrant or magnetic particle.

3.1.4 Where specific details of fabrication are not shown on the Contract Drawings, fabrication shall be in accordance with the requirements of the ASME B31.1 or ASME B31.3.

3.1.5 A template shall be used in laying out headers, laterals and other irregular details to ensure accurate cutting and a proper fit-up.

3.1.6 When branch reinforcement is required, it shall be shown on design drawings. Welding shall be in accordance with the requirements of the ASME B31.1 or ASME B31.3.

3.1.7 Burrs shall be removed by reaming and defects shall be removed by machining or grinding.

3.2 **INSTALLATION, APPLICATION AND ERECTION**

3.2.1 All welds shall be made as shown on Contract Drawings and Seller's fabrication drawings.

3.2.2 Flux, weld spatter and any slag shall be removed from each weld bead prior to depositing each succeeding pass.

3.2.3 Thermal Treatment

3.2.3.1 Minimum mandatory preheating temperatures for thermal cutting, tack welding, and welding shall be as specified in ASME B31.1, Paragraph 131.4, or ASME B31.3, Table 330.1.1, as applicable. The minimum preheat temperature shall be sufficient to remove all moisture prior to welding.

3.2.3.2 Postweld Heat Treatment (PWHT) shall be performed in accordance with ASME B31.1, Table 132 or ASME B31.3 and Table 331.1.1.

3.2.3.3 A maximum of two complete PWHT cycles is permitted for each weld. Further PWHT cycles shall not be carried out without the authorization of Buyer's welding engineer.

3.2.3.4 Acceptable PWHT methods are listed as follows in the order of preference. The Furnace Method shall be used whenever feasible.

A. Furnace Method

B. Local Resistance Method

C. Local Induction Method

Other methods shall require written authorization by the Buyer's welding engineer.

3.2.3.5 Threads and gasket surfaces shall be protected from excessive oxidation during heat treatment.

3.2.4 Inspection and Nondestructive Examination

3.2.4.1 General Requirement

Specific nondestructive examination requirements for each material and material section shall be as noted in Attachment A. Nondestructive examination methods, acceptance criteria, and additional general requirements shall be in accordance with the following subparagraphs. All nondestructive examination, except visual examination, shall be performed by personnel certified in accordance with ASNT SNT-TC-1A.

A. A Level II or III, qualified to ASNT SNT-TC-1A, shall perform all NDE interpretations. The Buyer's Representative may witness any or all examinations with final authority on all NDE interpretations results.

B. All visual and NDE examinations that are performed shall be documented on the weld/NDE record and shall be kept current with daily inspection examinations.

C. The weld/NDE record shall identify the project and/or contract number, applicable weld identification drawing number, weld number, welder identification, weld procedure, weld filler material (type). Visual weld examinations; fit-up, root pass, cover pass and any other examinations performed by examiner shall be dated and indicate the name and/or certification number of American Welding Society (AWS) QC1 welding inspector performing examination. Nondestructive examinations; ultrasonic, liquid penetrant, magnetic particle, radiography, leak testing, shall be dated and indicate the name and NDE certification level of examiner performing examination.

D. When progressive examination in accordance with ASME B31.3, Paragraph 341.3.4 is required, then the following additional requirements shall apply:

If any of the items examined in accordance with Paragraph 341.3.4(c) reveals a defect, then the welder/bonder or welding operator shall be considered unacceptable for any further welding/bonding to that procedure with respect to work done to this

specification without requalification and the agreement of Buyer.

Timing is essential for the control of welder, bonder or operator quality; therefore, the progressive examinations required by Paragraph 341.3.4 shall be completed within 16 working hours of the first defect, unless otherwise agreed to by Buyer.

3.2.4.2 Inspection

A. All phases of the welding operations from approval of materials through acceptance of welds shall be inspected by the Seller's welding inspector.

B. The Seller's welding inspector shall be qualified and certified in accordance with AWS QC1.

C. All weld inspection reports shall be submitted per Paragraph 1.3.6.

3.2.4.3 Visual Examination

A. Visual examination shall be performed in accordance with ASME Code, Section V, Article 9, and this specification.

B. Visual examination shall be performed on accessible surface of all completed welds.

C. The welds to be examined, the evaluation of indications and the acceptance criteria shall be in accordance with the applicable section of ASME B31.1, Paragraph 136.4.2 or ASME B31.3, Paragraph 341.4, Paragraph 344.2 and Table 341.3.2A as applicable.

3.2.4.4 Magnetic Particle Examination

A. Magnetic particle examination procedures shall be in accordance with the requirements and methods specified in ASME Code, Section V, Article 7.

B. Magnetic particle examination of welds shall include a band of base metal at least 1 inch wide on each side of the weld.

C. The evaluation of indications and the acceptance criteria shall be in accordance with ASME B31.1 Paragraph 136.4.3 or ASME B31.3 Paragraph 344.3 whichever is applicable.

D. If arc burns occur during magnetic particle examination, the arc burns shall be removed and the area reexamined by the magnetic yoke method.

3.2.4.5 Liquid Penetrant Examination

A. Liquid penetrant examination procedures shall be in accordance with the requirements and methods specified in ASME Code, Section V, Article 6, using solvent removable penetrant.

B. Penetrant materials shall meet the requirements of Paragraph T-625 of Article 6, Section V of ASME Code, for sulfur and halogen content regardless of the type of material to be examined.

C. Liquid penetrant examination of welds shall include a band of base metal at least 1 inch wide on each side of the weld.

D. The evaluation of indications and the acceptance criteria shall be in accordance with ASME B31.1, Paragraph 136.4.4 or ASME B31.3, Paragraph 344.4 whichever is applicable.

3.2.4.6 Ultrasonic Examination

A. Ultrasonic examination procedures shall be in accordance with the requirements and methods specified in ASME Code, Section V, Article 5 and ASME B31.3, Paragraph 344.6.1.

B. The evaluation of indications and the acceptance criteria shall be in accordance with ASME B31.3, Paragraph 344.6.2.

3.2.4.7 Radiographic Examination

A. Radiographic examination procedures and techniques shall be in accordance with ASME Section V, Article 2.

B. The acceptance criteria and extent of examination shall be in accordance with ASME B31.1, Paragraph 136.4.5 or ASME B31.3, Paragraph 341.3.2, Paragraph 344.5 and Paragraph 341.4 as applicable.

C. All radiographic procedures, regardless of source, shall be verified by demonstration to the Buyer prior to production (the use of cobalt 60 is not permitted).

D. Equipment and materials used in all NDE applications shall be available for review and authorization by the Buyer prior to performance of examinations.

E. Each radiographic film shall identify the project number, in addition to requirements of ASME Code, Section V.

F. Radiographic reports shall list each radiographic examination view. Indicate location, acceptability or

9 2 1 2 4 1 3 0 2 7 8

rejectability and note all discontinuities whether rejectable or not. When the report includes radiographs of welds which have been repaired, indicate which welds are repair welds and how many times each weld has been replaced.

G. If additional welding is performed on any weld area which has already been examined radiographically, this area is a repair area. Identify subsequent radiographs by "R-1, R-2," etc.

H. Submit all radiographs along with the original of the Radiography Test (RT) report to the Buyer for review and authorization within 24 hours after production radiographs are taken. For offsite fabrications, the Seller shall have original radiographs available for review and authorization by the Buyer prior to shipment.

3.2.5 Mechanical Testing of Welds

Mechanical Tests shall be conducted as required by the ASME B31.1 or ASME B31.3, whichever is applicable, ASME Code, Section IX, and this specification. A Buyer representative may witness the mechanical testing.

3.2.5.1 Brinell Hardness Testing (3000 Kg Load, 10 mm Ball)

Brinell hardness tests shall be performed in accordance with ASTM E10 and E110 and to the requirements of Paragraphs 3.2.5.2, 3.2.5.3 and Attachment A of this specification.

3.2.5.2 Procedure Qualifications (PQR)

A. P1 Materials

1) Brinell hardness tests of the deposited weld and heat affected zone shall be required for procedure qualifications where automatic or semi-automatic welding processes are used. Three tests shall be required in each area.

2) Weld and heat affected zone hardness shall not exceed 200 Bhn.

3.2.5.3 Production Welds

A. P1 Materials

1) Brinell hardness tests for 5 percent of production buttwelds shall be required where automatic or semi-automatic welding processes are used.

2) Brinell hardness tests shall meet the requirements specified in Paragraph 3.2.5.2.a.2.

3.2.5.4 When postweld heat treatment is required, all Brinell hardness tests shall be performed after postweld heat treatment.

3.2.5.5 Postweld heat treatment to correct conditions of excessive hardness shall not be performed without prior authorization from the Buyer.

3.2.5.6 The documented test results of production Brinell hardness testing shall be submitted to the Buyer when requested.

3.3 **FIELD QUALITY CONTROL**

Inspection and examination to be in accordance with Paragraphs 3.2.4 and 3.2.5.

3.4 **ADJUSTMENTS**

3.4.1 Weld Repair

3.4.1.1 All weld repairs shall be performed in accordance with the approved weld repair procedure.

3.4.1.2 Unacceptable indications shall be completely removed by chipping, gouging, grinding, or other authorized methods (for the type of material being repaired) to clean, sound metal, and the excavated areas shall be examined by the liquid penetrant method to assure complete removal of defects.

3.4.1.3 The repaired areas shall be reexamined using the same inspection procedures by which the defect was originally detected and all other inspection called out for the particular weld.

3.4.1.4 Two repair attempts will be allowed on any one defective areas. No further attempts to repair shall be carried out without the authorization of the Buyer.

END OF SECTION

ATTACHMENT A

FORM E-651

GENERAL REQUIREMENTS

SUMMARY OF HEAT TREATMENT, NDE AND RELATED REQUIREMENTS FOR WELDED PIPING

1a. Preheat base metal to 50°F where the nominal wall thickness is less than one inch. Where the nominal wall thickness is equal to or greater than one inch, the preheat shall be 175°F minimum and shall be maintained throughout the welding.

3a. Five percent random radiographic examination (RT) of buttwelds shall be performed in accordance with this specification and ASME B31.3, Paragraphs 341.4.1(b) and 344.5. (This includes ASME B31.1 and NFPA 24 lines.)

6a. On Carbon Steel P1 materials, Brinell hardness tests of the weld and heat affected zone shall be performed on the welding procedure qualification record and five percent of production welds when automatic or semi-automatic welding processes are used.

7a. Visual examination (VT) shall be performed in accordance with this specification and ASME B31.3, Paragraphs 341.4.1 and 341.3.2.

THIS PAGE INTENTIONALLY
LEFT BLANK

9 2 1 2 4 1 3 0 2 8 2

Client: DEPARTMENT OF ENERGY
Plant: HANFORD WASTE VITRIFICATION PLANT
Location: RICHLAND, WASHINGTON

SUMMARY OF HEAT TREATMENT, NDE AND RELATED REQUIREMENTS FOR WELDED PIPING
FLUOR DANIEL E-651 FORM

Contract: 845734
Piping Material Engineer: C. INANO
Welding Engineer: A. ESTRADA

REVISION	LINE CLASS	CATEGORY * D or M	Pipe Material And P-Number	Non-Pressure Attachment Material And P-Number	HEAT TREATMENT: BUTT AND FILLET WELDS	HEAT TREATMENT: SOCKET AND SEAL WELDS	HEAT TREATMENT: NON PRESSURE ATTACHMENTS	HEAT TREATMENT: BENDS	DESTRUCTIVE AND NON-DESTRUCTIVE EXAMINATION: RADIOGRAPHY (RT)	ULTRASONIC (UT)	MAGNETIC PARTICLE (MT)	LIQUID PENETRANT (PT)	CHARPY IMPACT	BRINELL HARDNESS (BHN)	VISUAL (VT)	NOTES	WELDING PROCEDURE SPECIFICATION(S)
																Numbers appearing below are applicable note numbers. See pages following summary for explanation of notes for destructive and non-destructive examination and postweld heat treatment.	
	G		C Steel P-1	C Steel P-1	1a	1a	1a		3a					6a	7a	ASME B31.3	
	S		C Steel P-1	C Steel P-1	1a	1a	1a		3a					6a	7a	ASME B31.1	

* Blank Denotes Basic Code Requirements

105\VOL:101\210\84571022.SPE/WP51-120791

A160-05062

REV. 0
ATTACHMENT A

THIS PAGE INTENTIONALLY
LEFT BLANK

SECTION 05063
WELDING PRESSURE VESSELS

PART 1 GENERAL

1.1 SUMMARY

This specification defines the welding, thermal treatment, examination and testing requirements for shop and field fabrication of carbon steel pressure vessels.

1.2 REFERENCES

The publications listed below form a part of this specification to the extent referenced. The publications are referred to in the text by the basic designation only.

AMERICAN NATIONAL STANDARDS INSTITUTE (ANSI)

ANSI Z49.1	1988 Safety in Welding and Cutting

AMERICAN SOCIETY OF MECHANICAL ENGINEERS (ASME)

ASME Section II, Part C	1989 Welding Rods, Electrodes, and Filler Metals
ASME Section V	1989 Nondestructive Examination
ASME Section VIII, Div. 1	1989 Pressure Vessels
ASME Section IX	1989 Qualification Standards for Welding and Brazing Procedures, Welders, Brazers and Welding and Brazing Operators

AMERICAN SOCIETY OF NONDESTRUCTIVE TESTING (ASNT)

ASNT SNT-TC-1A	1988 Recommended Practice

AMERICAN SOCIETY FOR TESTING AND MATERIALS (ASTM)

ASTM E10	1984 Test for Brinell Hardness of Metallic Materials
ASTM E110	1982 Test for Indention Hardness of Metallic Material by Portable Hardness Testers

AMERICAN WELDING SOCIETY (AWS)

AWS A2.4	1986 Symbols for Welding and Nondestructive Testing
AWS A3.0	1989 Welding Terms and Definitions
AWS QC1	1988 Standard and Guide for Qualification and Certification of Welding Inspectors

1.3 **SUBMITTALS**

Submit the following in accordance with the Vendor Drawing and Data Requirements section of the Order/Subcontract.

1.3.1 Welding Procedure Specifications (ASME Form QW-482 or equivalent), Procedure Qualification Records (ASME Form QW-483 or equivalent, Welder Performance Qualifications (ASME Form QW-484 or equivalent) conforming to the requirements of ASME Section IX and to the requirements of this specification. Submittals shall include a brief summary of the application of individual procedures with regard to types of joints and materials.

1.3.2 The Seller's Subcontractor NDE Certification of personnel and NDE procedures for shop fabricated items shall be submitted after review and concurrence by the Seller. Fabrication shall not start until these documents are returned to the Seller with authorization to proceed.

1.3.3 The Seller shall submit a weld filler material control procedure.

The weld filler material control procedure must include as a minimum the following information:

A. Procedure for the storage and handling of electrodes, filler metal and fluxes to the Buyer for review prior to the start of fabrication. The procedure shall include moisture, cleanliness, identification and disposal of contaminated and partially used material shall be included.

B. Methods of control (by heat or lot number and welder identification number) from receipt of material to consumption during fabrication. The control and disposal of contaminated and partially used material shall be included. All electrodes and electrode stubs shall be accounted for (e.g., same number of electrodes check out shall equal the number of electrodes/stubs checked in).

C. Weld filler materials of different specifications shall be sorted separately. Indicate the maximum time that low hydrogen electrodes will be exposed to ambient temperature.

D. Identify the responsible individuals who will administer and implement the procedure.

1.3.4 Certified Material Test Reports (CMTRs) chemical and physical analysis, for weld filler materials shall be submitted prior to utilization.

1.3.5 Weld repair procedure.

1.3.6 Final weld examination and inspection reports including visual NDE reports and radiography film.

1.3.7 AWS QC1 inspector certifications.

1.3.8 Weld Maps shall specifically identify each weld joint and procedure to be used (Attachment A).

1.3.9 Record of stress relief heat treatments.

1.3.10 Fabrication traveler identifying Buyer's purchase order number, weld inspection hold points, weld repair and technique, NDE inspection requirements, weld operator identification number and filler metal.

PART 2 PRODUCTS

2.1 MATERIALS AND EQUIPMENT

2.1.1 Weld filler materials shall be as specified in ASME Section II, Part C.

2.1.2 Weld filler materials for similar weld joints shall be used so that the principal elements in the deposited weld metal shall be of the same nominal composition as the base metal.

2.1.3 Solid wires for automatic welding processes shall contain the principal elements required for the deposited weld metal. Welds deposited by the submerged arc process shall not derive any principal element from the flux.

2.1.4 Fluxes that the flux manufacturer recommends for single pass shall not be used for multiple pass welds.

2.1.5 After opening shipping containers of electrodes, fluxes and other welding materials, storage and handling shall be as specified in the Seller's approved filler material control procedure following the guidelines of ASME Section II, Part C.

2.1.6 Submerged arc welding shall be performed using the same name brand flux and the same name brand of AWS-ASME classification wire as used for the procedure qualifications.

2.1.7 Tack welds shall be made with the same type of electrode filler wire that is used for the root pass. Tack welds in open butt joints shall be feathered into surrounding material.

2.1.8 Electrodes of the following classifications are not acceptable for pressure containing welds: E6012, E6013, E6014, E6020, E7020 and E7024.

2.1.9 For dissimilar joints in base materials consisting of carbon and low alloy steels, (P1 through P7), the filler metal shall be of the low hydrogen type and compatible with the composition of either base metal. The filler metal for the lower P-number material is preferred.

2.1.10 For dissimilar joints in base materials consisting of ferritic materials (P1 through P7) on one side and nickel-chrome on the other, the filler metal shall meet the requirements of AWS classifications NiCrFe-2, NiCrFe-3. When the base material is ferritic materials (P1 through P7) on one side and austenitic stainless on the other, the filler metal shall be AWS classification E/ER 309 or 309L. Joints of this nature must be avoided whenever practical.

2.1.11 Filler wires in Specification ASME/AWS SFA5.2 shall not be used for welding with Gas Tungsten Arc process.

2.1.12 Low hydrogen electrodes shall be used for all pressure retaining welds. For welds on 70 ksi or greater tensile strength material, electrodes shall be stored in 200-300°F ovens prior to use.

2.2 FABRICATION AND MANUFACTURE

2.2.1 General Requirements

2.2.1.1 Fabrication to this specification shall conform to the requirements of ASME Code, Section VIII, Division 1. Compliance with this specification and authorization of Welding Procedure Specifications and Procedure Qualification Records shall in no way relieve the Seller of the responsibility of providing welds which are sound and suited to the services for which they are intended.

2.2.1.2 Welding and nondestructive test symbols shall be in accordance with AWS A2.4.

2.2.1.3 Each welder shall be assigned an identification number, letter, or symbol which shall be used to identify his work.

2.2.1.4 Welding terms and definitions shall be in accordance with AWS A3.0.

2.2.1.5 Cleanliness shall be maintained during welding. All flux, slag, and other foreign material shall be removed from the weld area.

2.2.1.6 Safety measures for the protection of welders and operators involved in welding and cutting shall be in accordance with the practices specified in the ANSI Z49.1, plus all local, state, federal and other governing regulations.

2.2.1.7 Peening is only permitted to the extent necessary to clean slag from the weld.

2.2.1.8 All arc strikes, weld spatter, burrs etc., that are removed/ground out in their entirety and blended smoothly with the vessel surface.

2.2.1.9 Fabrication aids, temporary supporting lugs, etc., that are removed by gouging or cutting shall not be cut closer than .125 inch from the vessel surface. The remaining material shall then be ground flush with the base metal. The ground area shall be inspected for possible cracks or porosity by liquid penetrant or magnetic particle examination, whichever is applicable.

2.2.1.10 The attachment of nozzles, lugs, support rings and similar items when possible shall not be located on a weld seam. Prior engineering authorization is required if attachment is to be located on weld seam.

2.2.2 Welding Qualifications

2.2.2.1 Welding Procedure Specifications (ASME Form QW-482 or equivalent), Procedure Qualification Records (ASME Form QW-483 or equivalent, Welder's Performance Qualifications (ASME Form QW-484 or equivalent) shall conform to the requirements of Section IX of the ASME Code and to the requirements of this specification.

2.2.2.2 All Welding Procedures and Qualification Records for purchased items subcontracted by the Seller shall be reviewed by the Seller for content and contract compliance, prior to submittal to the Buyer.

2.2.2.3 Welder's Performance Qualification Records shall be made available for the Buyer, upon request.

2.2.2.4 Welding Procedure Specifications and Procedure Qualification Records requiring mechanical testing shall meet the requirements of Section 3.2.5 of this specification.

2.2.2.5 Welds that are deposited by procedures differing from those authorized shall be rejected and completely removed at Seller's cost.

2.2.2.6 At the request of the Buyer, any welder shall be retested and recertified when the work of the welder creates a reasonable doubt as to his workmanship.

2.2.2.7 Welding shall not start until Welding Procedure Specifications, Procedure Qualification Records, weld repair procedure, and Welder Performance Qualifications are returned to the Seller, from the Buyer, with authorization to proceed. Welds that are deposited by procedures or personnel differing from those authorized are subject to complete removal.

2.2.3 Acceptable Welding Processes

2.2.3.1 Welding may be achieved by any one or combination of the following welding processes:

Welding Process	AWS Letter Designation
Shielded Metal Arc Welding	SMAW
Manual and Automatic Gas Tungsten Arc Welding	GTAW
Automatic Submerged Arc Welding	SAW

2.2.3.2 Other welding processes, such as Gas Metal Arc Welding, Manual Submerged Arc, and processes employing flux cored electrodes require specific written authorization by the Buyer's welding engineer. Submit all pertinent data and intended application of said process for evaluation.

PART 3 EXECUTION

3.1 PREPARATION

3.1.1 Weld joint preparation shall be made by machining, grinding, or thermal cutting. When thermal cutting is performed, the joint surfaces shall be ground to sound metal prior to welding.

3.1.2 Permanent backup strips are not permitted without specific written authorization from the Buyer. If temporary backup rings are used and then removed, the weld area shall be dressed and examined for cracks and other defects. Examination of the weld surfaces shall be performed visually and by the magnetic particle method. Magnetic particle examination shall be performed in accordance with Paragraph 3.2.4.4.

3.2 **INSTALLATION, APPLICATION AND ERECTION**

3.2.1 All welds shall be made as shown on Contract Drawings and Seller's fabrication drawings.

3.2.2 Flux, weld spatter and any slag shall be removed from each weld bead prior to depositing each succeeding pass.

3.2.3 Thermal Treatment

3.2.3.1 Minimum mandatory preheating temperatures for thermal cutting, tack welding, and welding shall be as specified in ASME, Code Section VIII, Division 1. When the required preheat temperature is 300°F or higher, the metal temperature shall be maintained at preheat temperature until the weld is completed. The minimum preheat temperature shall be sufficient to remove all moisture prior to welding.

3.2.3.2 Postweld Heat Treatment (PWHT) shall be performed in accordance with ASME Code, Section VIII, Division 1, with the exception that reduced temperatures permitted by Note one of Table UCS-56 shall not be used without written authorization from Buyer's Welding Engineer.

A. PWHT for vessels subject to service conditions shall be noted on Buyer's equipment drawing and/or data sheet.

B. PWHT shall be accomplished after all lugs or attachment welds are complete.

C. A maximum of two complete PWHT cycles is permitted for each weld. Further PWHT cycles shall not be carried out without the authorization of Buyer's welding engineer.

3.2.3.3 Acceptable PWHT methods are listed as follows in the order of preference. The Furnace Method shall be used whenever feasible.

A. Furnace Method

B. Local Resistance Method

C. Local Induction Method

Other methods shall require written authorization by the Buyer's welding engineer.

3.2.3.4 Threads and gasket surfaces shall be protected from excessive oxidation during heat treatment.

3.2.4 Inspection and Nondestructive Examination

3.2.4.1 General Requirement

Specific nondestructive examination requirements for each material and material section shall be as noted on Buyer's equipment drawings, data sheets, purchase specifications, or purchase orders. Nondestructive examination methods, acceptance criteria, and additional general requirements shall be in accordance with the following subparagraphs. All nondestructive examination, except visual examination, shall be performed by personnel certified in accordance with ASNT SNT-TC-1A.

A. A Level II or III, qualified to ASNT SNT-TC-1A, shall perform all NDE interpretations. The Buyer's Representative may witness any or all examinations with final authority on all NDE interpretations results.

B. Weld maps and a sample of a weld/NDE record shall be submitted to the Buyer 30 days prior to fabrication for information.

C. Weld numbers shall be identified for each pressure retaining component and attachment to pressure retaining components of the weld map and weld/NDE records. Do not reuse weld numbers.

D. All visual and NDE examinations that are performed shall be documented on the weld/NDE record and shall be kept current with daily inspection examinations.

E. The weld/NDE record shall identify the project and/or contract number, applicable weld identification drawing number, weld number, welder identification, weld procedure, weld filler material (type), heat number traceability (where applicable). Visual weld examinations; fit-up, root pass, cover pass and any other examinations performed by examiner shall be dated and indicate the name and/or certification number of American Welding Society (AWS) QC1 welding inspector performing examination. Nondestructive examinations; ultrasonic, liquid penetrant, magnetic particle, radiography,

leak testing, shall be dated and indicate the name and NDE certification level of examiner performing examination.

F. As-built weld maps, completed weld/NDE records and supporting NDE reports shall be submitted within 30 days after completion of the system or component and prior to time of system pressure test.

3.2.4.2 Inspection

A. All phases of the welding operations from approval of materials through acceptance of welds shall be inspected by the Seller's welding inspector.

B. The Seller's welding inspector shall be qualified and certified in accordance with AWS QC1.

C. All weld inspection reports shall be maintained and submitted per Paragraph 1.6.6.

3.2.4.3 Visual Examination

A. Visual examination shall be performed in accordance with ASME Code, Section V, Article 9, and this specification.

B. Visual examination shall be performed on accessible surface of all completed welds.

C. The welds to be examined, the evaluation of indications and the acceptance criteria shall be in accordance with ASME Code, Section V, Article 9, Paragraphs T-950-1 and T-950-2, and ASME Code Section VIII, Division 1, Paragraph UW-35.

3.2.4.4 Magnetic Particle Examination

A. Magnetic particle examination procedures shall be in accordance with the requirements and methods specified in ASME Code, Section V, Article 7.

B. Magnetic particle examination of welds shall include a band of base metal at least 1 inch wide on each side of the weld.

C. The evaluation of indications and the acceptance criteria shall be in accordance with ASME Code, Section VIII, Division 1, Appendix 6, Paragraph 6.4.

D. If arc burns occur during magnetic particle examination, the arc burns shall be removed and the area reexamined by the magnetic yoke method.

3.2.4.5 Liquid Penetrant Examination

A. Liquid penetrant examination procedures shall be in accordance with the requirements and methods specified in ASME Code, Section V, Article 6.

B. Penetrant materials shall meet the requirements of Paragraph T-625 of Article 6, Section V of ASME Code, for sulfur and halogen content regardless of the type of material to be examined.

C. Liquid penetrant examination of welds shall include a band of base metal at least 1 inch wide on each side of the weld.

D. The evaluation of indications and the acceptance criteria shall be in accordance with ASME Code, Section VIII, Division 1, Appendix 8, Paragraph 8.3 and 8.4.

3.2.4.6 Radiographic Examination

A. Radiographic examination procedures and techniques shall be in accordance with ASME Section V, Article 2.

B. The acceptance criteria and extent of examination shall be in accordance with ASME Code, Section VIII, Division 1, Paragraph UW-51 or UW-52.

C. All radiographic procedures, regardless of source, shall be verified by demonstration to the Buyer prior to production (the use of cobalt 60 is not permitted).

D. Equipment and materials used in all NDE applications shall be available for review and authorization by the Buyer prior to performance of examinations.

E. Each radiographic film shall identify the project number, in addition to requirement of ASME Code, Section V.

F. Radiographic reports shall list each radiographic examination view. Indicate location, acceptability or rejectability and note all discontinuities whether rejectable or not. When the report includes radiographs of welds which have been repaired, indicate which welds are repair welds and how many times each weld has been replaced.

G. If additional welding is performed on any weld area which has

already been examined radiographically, this area is a repair area. Identify subsequent radiographs by "R-1, R-2," etc.

H. Submit all radiographs along with the original of the Radiography Test (RT) report to the Buyer for review and authorization within 24 hours after production radiographs are taken. For offsite fabrications, the Seller shall have original radiographs available for review and authorization by the Buyer prior to shipment.

I. When spot radiography examination, in accordance with UW-52, results in a rejected increment of weld, per UW-52(d)(2)(b), a new increment of weld, welded by the same welder or operator to the same welding procedure shall be immediately selected for spot radiographic examination. The location(s) of the additional spot radiograph(s) shall be agreed to by Buyer. If this spot radiography results in a rejected increment of weld, then the welder or welding operator shall be considered unacceptable for any further welding to that welding procedure with respect to work done to this specification without requalification and the agreement of Buyer.

Timing is essential for the control of welder or operator quality; therefore, the second increment of weld radiography shall be completed within 16 working hours of the first rejection, unless otherwise agreed to by Buyer.

3.2.5 Mechanical Testing of Welds

Mechanical Tests shall be conducted as required by the ASME Code, Section IX, and Attachment B of this specification. A Buyer representative may witness the mechanical testing.

3.2.5.1 Brinell Hardness Testing (3000 Kg Load, 10 mm Ball)

Brinell hardness tests shall be performed in accordance with ASTM [illegible] and E110 and to the requirements of Paragraphs 3.2.5.2, 3.2.[illegible] of this specification.

3.2.5.2 Procedure Qualifications (PQR)

A. P1 Materials

1) Brinell hardness tests of the deposited weld and heat affected zone shall be required for procedure qualifications where automatic or semi-automatic welding processes are used. Three tests shall be required in each area.

2) Weld and heat affected zone hardness shall not exceed 200 Bhn.

3.2.5.3 Production Welds

A. P1 Materials

1) One Brinell hardness test for each longitudinal, circumferential, and nozzle weld shall be required where automatic or semiautomatic welding procedures are used.

2) Brinell hardness tests shall meet the requirements specified in Paragraph 3.2.5.2.A.2.

3.2.5.4 When postweld heat treatment is required, all Brinell hardness tests shall be performed after postweld heat treatment.

3.2.5.5 Postweld heat treatment to correct conditions of excessive hardness shall not be performed without prior authorization from the Buyer.

3.2.5.6 The documented test results of production Brinell hardness testing shall be submitted to the Buyer when requested.

3.2.5.7 Impact Testing (Charpy V-Notch)

Charpy V-Notch impact tests of the weld metal and heat affected zone shall be performed and recorded on the Procedure Qualification Records for welding materials designated for low temperature service or when required by Buyer equipment drawings, data sheet, purchase specification, or purchase order. Procedure qualification and production impact testing, when required, shall be performed in accordance with ASME Code, Section VIII, Division 1 or 2, whichever is applicable and Section IX.

3.3 FIELD QUALITY CONTROL

Inspection and examination to be in accordance with Paragraphs 3.2.4 and 3.2.5.

3.4 ADJUSTMENTS

3.4.1 Weld Repair

3.4.1.1 All weld repairs shall be performed in accordance with the approved weld repair procedure.

3.4.1.2 Unacceptable indications shall be completely removed by chipping, gouging, grinding, or other authorized methods (for the type of material being repaired) to clean, sound metal, and the excavated

areas shall be examined by the magnetic particle or liquid penetrant method to assure complete removal of defects. Magnetic particle and liquid penetrant examination shall be performed in accordance with Paragraph 3.2.4.4 and 3.2.4.5 of this specification.

3.4.1.3 The repaired areas shall be reexamined using the same inspection procedures by which the defect was originally detected and all other inspection called out for the particular weld.

3.4.1.4 Two repair attempts will be allowed on any one defective areas. No further attempts to repair shall be carried out without the authorization of the Buyer.

3.5 **CLEANING**

(Not Used)

3.6 **PROTECTION**

(Not Used)

3.7 **DEMONSTRATION**

(Not Used)

3.8 **SCHEDULES**

(Not Used)

END OF SECTION

9212413029 5

THIS PAGE INTENTIONALLY
LEFT BLANK

ATTACHMENT A

WELD MAP DATA SHEET

Buyer P.O. No. Item No.

Buyer Weld Specification No.

1. Draw a single line sketch of the heater pressure retaining parts.
2. Identify each qualified welding procedure.

SKETCH

Seller
Address
Buyer PO#

This Form Completed By _____

Telephone No. _____

Revisions _____

Date _____

Buyer Welding Eng. Review Block

THIS PAGE INTENTIONALLY
LEFT BLANK

ATTACHMENT A (Continued)

Space No.	Action to be Taken
1	Enter the Buyer's Purchase Order number. A separate summary must be completed for each P.O. and suborder.
2	Enter the Buyer's item number(s). The summary sheet must reflect all items of similar construction that will have common welding procedures. Items of markedly different materials or methods of Manufacture should be entered on separate WPS's.
3	Enter Seller's name.
4	Enter Seller's shop location where work will be performed.
5	Enter date summary is compiled.
6	Enter Buyer VIC serial number and revision (Buyer's use only).
7	Enter Welding Procedure Specification (WPS) number.
8	Enter Procedure Qualification Record (PQR) number(s) supporting the WPS.
9	Enter the welding process(es) used in performing (PQR).
10	Enter type of joint as referenced in Legend. Where (E) is used, state type of joint or overlay in space 17.
11	Enter ASME-ASTM materials to be used in fabrication.
12	Enter base metal thickness range qualified by PQR,
13	Enter post weld heat treatment information in appropriate box.
14	Enter other pertinent information in this space. Such as impacts, etc.
15	Enter current review status of weld procedure (Buyer's use only).
16	Enter date of current review status of weld procedure (Buyer's use only).
17	Enter any special design or process information regarding the item of construction in this box.

THIS PAGE INTENTIONALLY
LEFT BLANK

9 2 1 2 4 1 3 0 2 9 8

U.S. DEPARTMENT OF ENERGY
Hanford Waste Vitrification Plant
Richland, Washington
DOE Contract DE-AC06-86RL10838

FLUOR DANIEL, INC.
Advanced Technology Division
Fluor Contract 8457

WELDING PROCEDURE SUMMARY

Welding Pressure Vessels

SERIAL NO.	PROCEDURE NO.	SUPPORTING PQR	PROCESS	JOINT TYPE	ASME-ASTM MATERIAL	THICKNESS QUALIFIED	PHWT		COMMENTS	STATUS	DATE
							YES	NO			
6	7	8	9	10	11	12	13		14	15	16

LEGEND

JOINT TYPE DESCRIPTION

- A Longitudinal Seam
- B Circumferential Seam
- C Pipe Seam
- D Nozzle Seam
- E Other (Explain in comments section)

REVIEW TYPE

- A Commence Fabrication
- B Commence Fabrication Submit w/Corrections
- C Do Not Fabricate

REMARKS: 17

MANUFACTURER: 3 SHOP LOCATION: 4 DATE: 5

P.O. NO.: 1 ITEM(S): 2

THIS PAGE INTENTIONALLY
LEFT BLANK

U.S. DEPARTMENT OF ENERGY
Hanford Waste Vitrification Plant
Richland, Washington
DOE Contract DE-AC06-86RL10838

FLUOR DANIEL, INC.
Advanced Technology Division
Fluor Contract 8457

WELDING PROCEDURE SUMMARY

Welding Pressure Vessels

SERIAL NO.	PROCEDURE NO.	SUPPORTING PQR	PROCESS	JOINT TYPE	ASME-ASTM MATERIAL	THICKNESS QUALIFIED	PHWT		COMMENTS	STATUS	DATE
							YES	NO			

LEGEND

JOINT TYPE DESCRIPTION

- A Longitudinal Seam
- B Circumferential Seam
- C Pipe Seam
- D Nozzle Seam
- E Other (Explain in comments section)

REVIEW TYPE

- A Commence Fabrication
- B Commence Fabrication Submit w/Corrections
- C Do Not Fabricate

REMARKS:

MANUFACTURER: _____ SHOP LOCATION: _____ DATE: _____

P.O. NO.: _____ ITEM(S): _____

THIS PAGE INTENTIONALLY
LEFT BLANK

SECTION 05120
STRUCTURAL STEEL
(SAFETY CLASS 3, RATED FOR SAFETY CLASS 1 DBE)

PART 1 GENERAL

1.1 SUMMARY

This Section covers the technical requirements for the furnishing, fabrication, delivery, erection and inspection of structural steel and miscellaneous metal including steel roof deck.

1.2 REFERENCES

The publications listed below form a part of this section to the extent referenced. The publications are referred to in the text by the basic designation only.

AMERICAN INSTITUTE OF STEEL CONSTRUCTION (AISC)

AISC S302	1986 Code of Standard Practice for Steel Buildings and Bridges
AISC S329	1985 Allowable Stress Design Specification for Structural Joints Using ASTM A325 or ASTM A490 Bolts
AISC M016	1989 Manual of Steel Construction - Allowable Stress Design, Ninth Edition

AMERICAN SOCIETY FOR TESTING AND MATERIALS (ASTM)

ASTM A36	1989 Standard Specification for Structural Steel
ASTM A53	1990 Standard Specification for Pipe, Steel, Black and Hot-Dipped, Zinc-Coated, Welded and Seamless
ASTM A108	1990 Standard Specification for Steel Bars, Carbon, Cold-Finished, Standard Quality
ASTM A307	1990 Standard Specification for Carbon Steel Bolts and Studs, 60000 PSI Tensile Strength
ASTM A325	1990 Standard Specification for High-Strength Bolts for Structural Steel Joints

ASTM A446	1989 Standard Specification for Steel Sheet, Zinc-Coated (Galvanized) by the Hot-Dip Process, Structural (Physical) Quality
ASTM A500	1989 Standard Specification for Cold-Formed Welded and Seamless Structural Tubing in Rounds and Shapes
ASTM A525	1987 Standard Specification for General Requirements for Steel Sheet Zinc-Coated (Galvanized) by the Hot-Dip Process
ASTM A563	1990 Standard Specification for Carbon and Alloy Steel Nuts
ASTM F436	1990 Standard Specification for Hardened Steel Washers
ASTM F959	1990 Standard Specification for Compressible-Washer-Type Direct Tension Indicators for Use with Structural Fasteners

FEDERAL SPECIFICATIONS (FS)

RR-G-661E	1987 Grating, Metal, Bar Type (Floor, except for Naval Vessels)

STEEL DECK INSTITUTE (SDI)

1987	Design Manual for Composite Decks, Form Decks, and Roof Decks

1.3 RELATED REQUIREMENTS

Specification Section 05060	Welding Structural
Specification Section 09900	Painting
Specification Section 03300	Concrete Construction

1.4 SUBMITTALS

Submit the following in accordance with the Vendor Drawing and Data Requirements section of the Order/Subcontract.

1.4.1 Certified Material Test Reports

Certified material test reports (CMTRs) demonstrating material conformance to all the noted ASTM, AWS, and Federal Specification requirements identified in Paragraphs 2.1 and 2.2.

1.4.2 Product Data

Catalog cuts for direct tension indicators and shear stud connectors, or other data published by the manufacturer, demonstrating conformance to the specified requirements.

Catalog data indicating deck profile characteristics, dimensions, structural properties, and finishes. Catalog figure numbers alone will not suffice.

1.4.3 Shop and Erection Drawings

Shop and erection drawings meeting the requirements of Paragraph 2.3.1.1.

1.4.4 Bolt Lists

Bolt lists and summary sheets, meeting the requirements of Paragraph 2.3.1.2.

1.4.5 Documentation of all shop and field inspections conducted under Paragraph 3.3.

1.4.6 Documentation of all personnel qualifications required by the specifications referenced herein.

PART 2 PRODUCTS

All materials shall be carbon steel unless noted otherwise on the Contract Drawings.

2.1 CARBON STEEL MATERIALS

2.1.1 Structural steel members (shapes, bars, and plate): ASTM A36.

2.1.2 Structural tubing: ASTM A500, Grade B.

2.1.3 Pipe: ASTM A53, Type E or Type S, Grade B.

2.1.4 Shear stud connectors: Nelson Type S3L or H4L or equal conforming to ASTM A108, with a minimum ultimate tensile stress capacity of 55,000 psi.

2.1.5 Bolts: All bolts shall be 3/4 diameter high strength bolt assemblies, unless noted otherwise on the Contract Drawings. A slip critical bolt assembly shall consist of a heavy hex head high strength bolt, a heavy hex nut, a hardened washer and a direct tension indicator. A bearing bolt assembly shall consist of a heavy hex head high strength bolt, a heavy hex nut and a hardened washer.

A common (machine) bolt assembly shall consist of a heavy hex head common bolt, a heavy hex nut and a hardened washer.

High Strength Bolts:	ASTM A325
Common (machine) Bolts:	ASTM A307
Hardened Washers:	ASTM F436
Heavy Hex Nuts:	ASTM A563
Direct Tension Indicators:	ASTM F959 Type 325

2.1.6 Floor grating: Federal Specification RR-G-661E, Type I (parallel bearing bars with right angle cross members), Class I (welded), Material S (steel), with serrated surface. Bearing bars: 1-1/4 inch by 3/16 inch on 1-3/16 inch centers. Cross bars: 4 inch centers. End-banding bars: 1-1/4 inch by 3/16 inch.

2.1.7 Stair treads: Standard commercial product with nonslip nosings, conforming to the floor grating requirements above.

2.1.8 Floor plates: Floor plate shall be skid resistant raised pattern carbon steel plate, 1/4 inch thick excluding the height of the raised pattern. The plate material shall have a minimum yield stress of 33000 psi.

2.1.9 Pipe handrail and pipe sleeves: ASTM A53, Schedule 40.

2.1.10 Paint and coatings: Specification Section 09900.

2.1.11 Weld materials: Specification Section 05060, Welding Structural.

2.2 **METAL DECK**

2.2.1 Sheet Steel: ASTM A446, Grade B Structural Quality; with G90 galvanized coating conforming to ASTM A525.

2.2.2 Metal Decking: LXR Type B as manufactured by Elixir Ind. or equal.

Span Design: Multiple

Minimum Metal Thickness: 20 Gauge

9212413303

Nominal Height: 1-1/2 inch high fluted profile

Side Joints: Per Contract Drawings

2.2.3 Provide all metal closure strips, flashings, touch-up paint and all related accessories required for the installation of steel deck.

2.3 **FABRICATION/MANUFACTURE**

2.3.1 Shop Detailing

2.3.1.1 Prepare shop and erection drawings. Include dimensioning, fabrication and erection details, connection details, methods of field assembly, mark numbers, materials and member sizes. Clearly note field bolting and welding requirements.

2.3.1.2 Prepare a complete bolt list with summary sheets showing quantities required, sizes, lengths, grips and the members they connect. Temporary bolts used only for erection shall be listed separately. Paint heads of temporary bolts yellow.

2.3.1.3 Each item detailed shall be provided with a unique identifier (mark number) which identifies the structure or building number, the fabricators detail sheet number and an individual piece designation number.

2.3.1.4 Connections which are not detailed or otherwise noted on the Contract Drawings shall be shop welded and field bolted AISC framed beam connections as shown in Tables II and III of the AISC Manual of Steel Construction (M016), Part 4. Use the maximum number (n) of rows of field bolts compatible with the "T" dimension and flange cope for each beam depth under consideration. Use a 1/4 inch shop weld "A" and length of connection angle length "L" as shown in Table III for the required number of field bolts.

2.3.1.5 The surface condition of high-strength bolted parts shall meet the requirements for a Class A surface as specified in Table 3 of the AISC Specification for Structural Joints Using ASTM A325 or A490 Bolts (S329).

2.3.1.6 In general, bolted connections shall be made using a <u>bearing bolt assembly</u> and tightened to snug tight conditions as defined in AISC S329, Paragraph 8(c). Only where <u>slip critical</u> (SC) bolted connection is indicated on the Contract Drawings, a <u>slip critical bolt assembly</u> shall be used and tightened per Paragraph 8(d)4 of AISC S329. In either connection bolt threads need not be excluded from the shear plane.

Do not omit primer from the contact surfaces of bolted connections. Omit finish paint from contact surfaces of all high-strength bolted connections.

2.3.1.7 Provide erection clips for fit-up of welded connections.

2.3.1.8 Gusset and stiffener plates shall be 3/8 inch thick minimum.

2.3.1.9 Columns shall have full bearing at splices and at end plates.

2.3.1.10 Cut or raw edges shall be rounded off and smooth to the touch.

2.3.1.11 Bends shall have a minimum radius equal to the thickness of the material.

2.3.1.12 Floor plates: Floor plate shall be provided with a 9/16 inch diameter drain hole for each 15 square feet of plate area. There shall be at least one drain hole per panel.

Joints in floor plates shall be located over supports.

Openings dimensioned on the Contract Drawings shall be detailed and provided in the fabrication shop.

2.3.1.13 Metal deck: Cut units so that end joints will occur on supporting members. End joints shall overlap a minimum of 2 inches.

Include decking plan, support locations, projections, openings and reinforcement, pertinent details, mark numbers, and accessories. Indicate temporary shoring of decking where required.

2.3.2 Shop Fabrication

Do not begin shop fabrication until the shop and erection drawings have been reviewed and released for fabrication by the Buyer.

2.3.2.1 Fabrication of structural steel shall be in accordance with the requirements of the AISC Code of Standard Practice, Sections 6.1 through 6.6, with the modifications and additional requirements specified hereinafter.

2.3.2.2 All fabricated steel shall be clearly marked with the mark number shown on the shop drawings.

2.3.2.3 Shop welding, including welding qualification, process and preparation, shall be in accordance with Specification Section 05060, Welding Structural, as applicable for carbon steel. Only visual examination of welds, in accordance with procedures specified in Paragraph 3.2.8 of Specification Section 05060 for statically loaded structures, is required unless noted otherwise on the drawings.

2.3.2.4 Shop priming shall be in accordance with Specification Section 09900, Painting.

2.3.2.5 Prior to shop priming, all sharp corners, burrs (including bolt hole burrs), weld spatter, slag, weld flux, loose mill scale and other foreign matter shall be removed.

2.4 **SHIPPING**

2.4.1 Shipping lists shall accompany each shipment of steel and metal deck.

2.4.2 Cars and/or trucks shall be loaded and cribbed so they can be readily unloaded. The steel shall be protected from damage caused by shifting of steel during transit.

2.4.3 The sizes of fabricated pieces shall be as large as practicable considering clearances and capacities of railroad cars or trucks between the fabricating shop and the jobsite.

2.4.4 Small pieces shall be bundled with steel bands to prevent damage during shipment and to facilitate unloading.

PART 3 EXECUTION

3.1 **PREPARATION**

3.1.1 Prior to beginning field erection, the Seller shall review the erection drawings, verify receipt of all required materials, and develop an erection plan. The erection plan shall take into account erection loads and provide sufficient temporary bracing to maintain the structure in a safe condition. The temporary bracing shall maintain the structure in a plumb and correctly aligned condition until erection has been completed.

3.1.2 Store structural steel members, in an area designated by the Buyer, aboveground on platforms, skids or other supports, in such manner that any deformation or damage of shapes, plates, etc., shall be avoided.

3.2 **INSTALLATION, APPLICATION AND ERECTION**

Erect structural steel in accordance with the requirements of the AISC Code of Standard Practice (S302), Section 7, with the modifications and additional requirements specified herein. Structural steel to be set on concrete shall not be erected until the concrete has attained the specified 28 day compressive strength.

3.2.1 Immediately report to the Buyer errors in shop work or errors in existing conditions that are discovered in the field. Do not take corrective action without approval by the Buyer.

3.2.2 Field weld components and shear studs as indicated on the erection drawings.

3.2.3 Slip critical (SC) connections shall be made using slip critical bolt assembly and shall meet the requirements of Parts 3 and 7 of AISC S329 for Slip-Critical Connections (Class A). Do not substitute direct tension indicators for the required washers for oversize and slotted holes.

Install bolts in accordance with Part 8 (d) (4) of AISC S329, "Direct Tension Indicator Tightening," and in strict accordance with the manufacturer's published recommendations.

Do not use bolts or nuts whose threads have been visibly distorted.

3.2.4 Connections other than slip critical shall be made using a bearing bolt assembly and tightened to the snug tight condition as defined in AISC S329, Paragraph 8(c).

3.2.5 Weld steel floor plates to steel supporting members except floor plates indicated as removable on the Contract or Erection Drawings.

Secure removable floor plates with flat head counter-sunk bolts or screws as indicated on the Contract Drawings.

3.2.6 All field welding shall be performed in accordance with Specification Section 05060, Welding Structural, as applicable for carbon steel. Only visual examination of welds, in accordance with procedures specified in Paragraph 3.2.8 of Specification Section 05060 for statically loaded structures, is required unless otherwise noted on the drawings.

3.2.7 Field cut all openings not detailed on the drawings.

3.2.8 After erection, prime welds, abrasions, and surfaces not shop primed, except surfaces to be in contact with concrete in accordance with Specification Section 09900, Painting.

3.2.9 Erect metal decking in accordance with SDI Design Manual for Composite Decks, Form Decks, Roof Decks and manufacturer's instructions, and the approved shop drawings.

3.2.10 Bear decking on steel supports with 3 inch minimum bearing. Align and level.

3.2.11 Reinforce steel deck openings from 6 to 18 inches in size with 2 x 2 x 1/4 inch, steel angles. Place angles perpendicular to flutes; and mechanically attach to deck at each flute. The angle shall extend a minimum of two flutes past the opening or to the main steel if closer.

3.2.12 Install sheet steel closures and angle flashings to close openings between deck and walls, columns, and openings.

3.2.13 Provide side joints as shown on the drawings.

3.2.14 Weld deck to steel supports as shown on the Contract Drawings. Immediately after welding deck and other metal components in position, coat welds, burned areas, and damaged surface coating, with zinc chromate type touch-up primer after all loose slag and paint have been removed by power wire brush cleaning.

3.2.15 Grout under base plates with nonshrink cement based grout in accordance with Specification Section 03300, Concrete Construction.

3.2.16 Erection tolerances shall be in accordance with AISC Code of Standard Practice (S302), Section 7.11.

3.2.17 Paint in accordance with Specification Section 09900, Painting.

3.3 FIELD QUALITY CONTROL

3.3.1 The Seller shall develop an inspection system for the fabrication and erection of the structural steel and metal decking to assure conformance with the contract requirements. The Seller's quality control program and inspection system shall be submitted in writing to the Buyer for review. Records of inspection and certified reports of tests required shall be submitted to the Buyer. The Buyer shall be allowed access during fabrication and erection.

3.3.2 The Seller shall be subject to shop and field inspection to ascertain the following:

A. That all materials provided are properly documented with certified mill test reports.

B. That all personnel involved in the fabrication and erection processes have been qualified in accordance to the appropriate specifications referred to herein.

C. That the fabrication and erection methods and procedures are representative of accepted industry standard methods and procedures.

D. That the final installed structure is in accordance with the Contract Drawings.

3.3.3 Inspection of the installation and tightening of the slip critical connection high strength bolts is required. This inspection shall include observation of the tightening procedure and measurement of the gap. Measure the gap in strict accordance with ASTM F959 and the manufacturer's published recommendations.

The inspector need not be present during the entire installation and tightening operation, provided he has:

A. Inspected the surfaces and bolt type for conformance to plans and specifications prior to start of bolting,

B. And will, upon completion of all bolting, verify the minimum specified bolt tension for 10 percent of the bolts for each connection with a minimum of two bolts per connection.

3.3.4 All other bolted connections and shop and field welds shall be visually inspected.

END OF SECTION

SECTION 09900
PAINTING

PART 1 GENERAL

1.1 SUMMARY

A. This section covers technical requirements for the preparation of surfaces and the furnishing and application of all paints.

B. The term "Paint" as used herein, includes emulsions, enamels, paints, stains, varnishes, sealers, emulsion filler, and other coatings, whether used as prime, intermediate, or finish coats.

1.2 REFERENCES

The publications listed below form a part of this specification to the extent referenced. The publications are referred to in the text by the basic designation only.

AMERICAN INSTITUTE OF STEEL CONSTRUCTION (AISC)

AISC S329	1985 Allowable Stress Design Specification for Structural Joints Using ASTM A325 or ASTM A490 Bolts

FEDERAL SPECIFICATIONS (FS)

FS QPL-TT-E-489	1990 (Rev. 35) Enamel, Alkyd, Gloss (for Exterior and Interior Surfaces)
FS TT-E-509	1986 (Rev. C) (Amd. 2) Enamel, Odorless, Alkyd, Interior, Semigloss, White and Tints
FS TT-E-545	1986 (Rev. C) (Amd. 1) Enamel, Odorless, Alkyd, Interior - Indoor Coat, Flat, Tints and White

FEDERAL STANDARD (FED STD)

FED STD 595B	1989 Colors Used in Government Procurement

HANFORD PLANT STANDARDS (HPS)

HPS-111-M	1979 (Rev. 1) Standard Specification for Identification of Piping Systems

MILITARY SPECIFICATIONS (MIL)

MIL-C-83286	1987 (Rev. B) (Notice 1) (Amd. 1) Coating, Urethane, Aliphatic Isocyanate, for Aerospace Applications (QPL)
MIL-P-24351	1985 (Rev. A) Primer Coating, Alkyd, Blue (Formula No. 6N35-2)
MIL-P-24441/1	1986 (Rev. B) Paint, Epoxy-Polyamide, Green Primer, Formula 150, Type I (QPL)
MIL-P-28577	1988 (Rev. B) Primer, Water-Bourne, Acrylic or Modified Acrylic for Metal Surfaces
MIL-P-28578	1988 (Rev. B) Paint, Water-Bourne, Acrylic or Modified Acrylic for Metal Surfaces

STEEL STRUCTURES PAINTING COUNCIL (SSPC)

SSPC Paint-1	1982 Shop, Field, and Maintenance Painting
SSPC PA-2	1982 Measurement of Dry Paint Thickness with Magnetic Gauges
SSPC SP-1	1982 Solvent Cleaning
SSPC SP-2	1982 Hand Tool Cleaning
SSPC SP-3	1982 Power Tool Cleaning
SSPC SP-6	1985 Commercial Blast Cleaning
SSPC SP-7	1985 Brush-Off Blast Cleaning
SSPC SP-10	1985 Near-White Blast Cleaning
SSPC VIS 1	1989 Visual Standard for Abrasive Blast Cleaned Steel (Standard Reference Photographs)

1.3 **RELATED REQUIREMENTS**

Specification Section 05120 Structural Steel

Specification Section 15061 Piping Carbon Steel and Iron

1.4 **DEFINITIONS**

DFT - Refers to the minimum dry film thickness of coatings which are applied.

1.5 **SUBMITTALS**

Submit the following in accordance with the Vendor Drawing and Data Requirements section of the Order/Subcontract.

1.5.1 Manufacturer's Instructions

A. Paint application instructions

1.5.2 Evidence of Acceptable Variation

If a product proposed for use does not conform to requirements of the referenced specification, submit for approval to the Buyer evidence that the proposed product is either equal to or better than the product specified. The submittal shall include the following:

A. Identification of the proposed substitute;

B. Reason why the substitution is necessary;

C. A comparative analysis of the specified product and the proposed substitute, including tabulations of the composition of pigment and vehicle;

D. The differences between the specified product and the proposed substitute; and

E. Other information necessary for an accurate comparison of the proposed substitute and the specified product.

1.5.3 Certificates of Compliance

For each type of coating, or other product furnished, submit a certificate from the manufacturer stating that the product conforms to requirements of the referenced specification. If the referenced specification has a Qualified Products List (QPL), certify that the product has been tested and approved for inclusion in the QPL.

1.5.4 Field Samples and Tests

The Buyer will take one-pint samples of paint at random from the products delivered to the job site and test them to verify that the products either conform to the referenced specifications or the approved substitution. Products which do not conform shall be removed from the job site and replaced with new products that conform to the referenced specifications or the approved substitution.

PART 2 PRODUCTS

2.1 MATERIALS AND/OR EQUIPMENT

Conform to the specifications and standards referenced in PART 3. For materials specified that are on the Qualified Products List (QPL), the material provided shall have been tested and approved for inclusion in the QPL.

PART 3 EXECUTION

3.1 PREPARATION - SURFACE

Remove dirt, loose particles, grease, oil, and other substances deleterious to coating performance as specified for each substrate.

3.1.1 Ferrous Surfaces

A. Shop-Coated Surfaces and Small Areas That Contain Rust, Mill Scale and Other Foreign Substances: Solvent clean in accordance with SSPC SP-1 to remove oil and grease. Where shop coat is missing or damaged, clean according to SSPC SP-6 or SSPC SP-10. Use inhibitor as recommended by coating manufacturer to prevent premature rusting.

B. Surfaces With More Than 20 Percent Rust, Mill Scale, and Other Foreign Substances: Clean entire surface in accordance with SSPC SP-10.

3.1.2 Final Ferrous Surface Condition

Cleaned surface shall be similar to photographs in SSPC VIS 1 as follows:

Degree of Cleaning	Adherent Mill Scale	Rusting Mill Scale	Rusted	Pitted and Rusted
Hand Tool Cleaning SSPC SP-2	(1)	B St 2	C St 2	D St 2
Power Tool Cleaning SSPC SP-3	(1)	B St 2	C St 3	D St 3
Commercial Blast Cleaning SSPC SP-6	(1)	(1)	C Sa 2	D Sa 2
Brush-Off Blast Cleaning SSPC SP-7	(1)	B Sa 1	C Sa	D Sa
Near-White Blast Cleaning SSPC SP-10	A Sa 2-1/2	B Sa 2-1/2	C SA 2-1/2	D Sa 2-1/2

NOTE: (1) No photograph is available or recommended for comparison.

3.1.3 Galvanized Surfaces

New Galvanized: Solvent clean in accordance with SSPC SP-1.

3.2 **INSTALLATION, APPLICATION AND ERECTION**

3.2.1 Coating Application

Apply coating materials in accordance with SSPC Paint-1. SSPC Paint-1 methods are applicable to all substrates, except as modified herein. Thoroughly work coating materials into joints, crevices, and open spaces. Touch up damaged coatings before applying subsequent coats. Interior areas shall be broom clean and dust free before and during the application of coating material.

A. Drying Time: Allow time between coats, as recommended by the coating manufacturer, to permit thorough drying. Provide each coat in specified condition to receive the next coat.

B. Primers, and Intermediate Coats: Do not allow primers or intermediate coats to dry more than 30 days, or longer than recommended by the manufacturer, before applying subsequent

coats. Follow manufacturer's recommendations for surface preparation if primers or intermediate coats are allowed to dry longer than recommended by manufacturers of subsequent coatings. Each coat shall cover the surface of the preceding coat or surface completely, and there shall be a visually perceptible difference in shades of successive coats.

C. Finished Surfaces: Provide finished surfaces free from runs, drops, ridges, waves, laps, brush marks, and variations in colors.

3.2.2 Equipment

Apply coatings with approved brushes, approved rollers, or approved spray equipment, unless specified otherwise. Spray areas made inaccessible to brushing by items such as ducts and other equipment.

3.2.3 Thinning of Paints

Reduce paints to proper consistency by adding fresh paint, except when thinning is mandatory for the type of paint being used. Use of thinners to be in accordance with manufacturer's recommendations for the methods of application, types and quantities of thinners.

3.2.4 Coating Systems

A. Systems by Substrates: Apply coatings that conform to the respective specifications listed in the following Tables:

Table

I Exterior Metal Surfaces
II Interior Metal Surfaces
III Building Systems Surfaces: Interior and Exterior

B. Minimum Dry Film Thickness (DFT): Apply paints, primers, varnishes, enamels, undercoats, and other coatings to a minimum dry film thickness of 1.5 mil each coat unless specified otherwise in the Tables. Coating thickness, where specified, refers to the minimum dry film thickness.

C. Coatings for Surfaces Not Specified Otherwise: Coat surfaces which have not been specified the same as surfaces having similar conditions of exposure.

D. Edges of Field Cut Steel, Metal Roof, Metal Siding and All Surfaces Damaged During Performance of the Work: Coat surfaces with the following:

1) One coat of primer.

2) One coat of undercoat or intermediate coat.

3) One top coat to match adjacent surfaces.

E. The number of coats and dry film thickness are minimums. If the specified dry film thickness cannot be obtained in the specified number of coats, additional coats shall be applied as required. Where multiple coats are specified, the specified number of coats shall be applied even if the specified dry film thickness can be obtained in fewer coats.

3.2.4.1 Coating Systems

TABLE - I

EXTERIOR METAL SURFACES

	SURFACE/AREA	PRIMER	DFT	INTERMEDIATE COAT	DFT	TOPCOAT	DFT
****** FERROUS SURFACES ******							
A.	New Steel that has been Blasted to SSPC SP-10	MIL-P-24441/1 Form. 150	3.0	MIL-P-24441/1 Form. 150	3.0	MIL-C-83286	2.0
B.	Structural Steel clean to SSPC SP-10	MIL-P-24441/1 Form. 150 Meeting AISC S329*	2.0	MIL-P-24441/1 Form. 150	3.0	MIL-C-83286	2.0
****** GALVANIZED SURFACES ******							
C.	New Galvanized Surfaces	MIL-P-28577	2.5	N/A		MIL-P-28578	1.5
****** SURFACES NOT SPECIFIED OTHERWISE ******							
D.	Other Metal, except Roof Surfaces, Not Specified Otherwise	MIL-P-24351 1 coat on shop primed surfaces and 2 coats on non-shop primed surfaces	2.0	FS QPL-TT-E-489	1.5	FS QPL-TT-E-489	1.5

*Refer to Paragraph 3.2.5, A-3

TABLE - II

INTERIOR METAL SURFACES

	SURFACE/AREA	PRIMER	DFT	INTERMEDIATE COAT	DFT	TOPCOAT	DFT
A.	Metal in Interior	MIL-P-24351	2.0	FS TT-E-545	1.5	FS TT-E-509	1.5
B.	Structural Steel Clean to SSPC SP-10	MIL-P-24351 Meeting AISC S329*	2.0	N/A		FS TT-E-509	1.5

*Refer to Paragraph 3.2.5, A-3

TABLE - III

BUILDING SYSTEMS SURFACES: INTERIOR AND EXTERIOR

	SURFACE/AREA	PRIMER	DFT	INTERMEDIATE COAT	DFT	TOPCOAT	DFT
1.	Mechanical, Electrical, and Miscellaneous Metal Items, Except Hot Metal Surfaces and New Prefinished Equipment: Prefinishing of new mechanical and electrical equipment is specified in the section covering the particular item. Paint copper pipe exposed in interior spaces.						
A.	Surfaces Not Adjacent to Painted Surfaces	MIL-P-24351	2.0	FS QPL-TT-E-489 2 coats of same coating as used for coating metal in same space	1.5	FS QPL-TT-E-489	1.5
B.	Surface Adjacent to Painted Surfaces	Coating systems as specified. Color of topcoat to match adjacent surfaces. 1.5 mils dry film thickness for each coat.					
C.	Carbon Steel Piping, Insulated	Per Spec Section 15061		None		None	
D.	Carbon Steel Piping, Miscellaneous Pipe Support Elements, Not Insulated and Protruding Through Insulation	Per Section 15061		Amercoat 185 or equal	3.0	Amercoat 33 or equal	3.0

NOTE: Weld areas and other areas with damaged primer and bare areas shall be wire brushed per SSPC SP-2 prior to application of intermediate coat.

3.2.5 Coating Systems for Metal

A. Primer: Apply specified ferrous metal primer on the same day that surface is cleaned. If flash rusting occurs, re-clean the surface prior to application of primer.

1) Inaccessible Surfaces: Prior to erection, use two coats of the specified primer on metal surfaces that will be inaccessible after erection.

2) Shop-primed Surfaces: Touch up exposed substrates and damaged coatings to protect from rusting prior to applying field primer.

3) Structural Steel: Provide coatings classified as Class A which provide a mean slip coefficient not less than 0.33 per AISC S329, Bolted Joints. Omit finish paint from contact surfaces of all high-strength bolted connections. (See Specification Section 05120, Paragraph 2.3.1.6.)

B. Apply coatings of Tables I, II and III. "DFT" means dry film thickness in mils.

3.2.6 Piping Identification

Piping identification in accordance with HPS-111-M (Attachment A).

3.2.7 Environmental Conditions

3.2.7.1 Exterior Coatings

Do not apply coating to surfaces during foggy or rainy weather, or under the following surface temperature conditions:

A. Less than 5°F above the dew point of the surrounding air.

B. Below 40°F (for oil-based paints), 50°F (for water-based paints) or over 95°F, unless approved by the Buyer.

3.2.7.2 Interior Coatings

Apply coatings when surfaces to be painted are dry and the following surface temperatures can be maintained:

A. Between 65° and 95°F during the application of enamels.

B. Between 50° and 95°F during the application of other coatings.

3.2.7.3 Color Selection

Colors of finish coats shall be as indicated (color numbers are from FED STD 595B). Colors shall be submitted for approval. Manufacturers' names and color identification are used for the purpose of color identification only. Named products are acceptable for use only if they conform to specified requirements. Products of other manufacturers are acceptable if the colors approximate colors indicated and the product conforms to specified requirements.

3.2.8 Location and Surface Type to be Painted

3.2.8.1 Painting Included

Where a space or surface is indicated to be painted, include the following unless indicated otherwise:

A. Surfaces behind portable objects and surface mounted articles readily detachable by removal of fasteners, such as screws and bolts.

B. New factory finished surfaces that require identification or color coding and factory finished surfaces that are damaged during performance of the work.

C. Existing coated surfaces that are damaged during performance of the work.

3.2.8.2 Painting Excluded

Do not paint the following unless indicated otherwise:

A. Surfaces concealed and made inaccessible by panelboards, fixed ductwork, machinery, and equipment fixed in place.

B. Surfaces in concealed spaces. Concealed spaces are defined as furred spaces and chases.

C. Steel to be embedded in concrete.

D. Copper, stainless steel, aluminum, brass, plastic, and lead except existing coated surfaces.

3.2.8.3 Exterior Painting

Includes all building surfaces and appurtenances as indicated.

3.2.8.4 Interior Painting

Includes all building surfaces and appurtenances as indicated. Where a space or surface is indicated to be painted, include the following items, unless indicated otherwise:

A. Exposed columns, girders, beams, and joists, and metal deck.

B. Other contiguous surfaces.

9212413031 9

3.2.8.5 Mechanical and Electrical Painting

Includes field coating of interior and exterior surfaces.

A. Where a space or surface is indicated to be painted, include the following items unless indicated otherwise:

1) Exposed piping, conduit, and ductwork;

2) Supports, hangers, air grilles, and registers;

3) Miscellaneous metalwork and insulation coverings.

B. Do not paint the following, unless indicated otherwise:

1) New galvanized, aluminum, and copper surfaces under insulation;

2) New aluminum jacket on piping.

3.2.8.6 Exterior Painting of Site Work Items

Field coat the following items:

A. Utility piping

B. Post barricade for fire hydrants

C. Post indicator valves

3.2.8.7 Color Coding

A. Utility pipes

Color Coding For Utility Pipes: Paint the pipe in accord with HPS-111-M (Attachment A).

B. Fire hydrant posts

1) Paint aboveground portion of each post Red No. 11105.

2) Provide and install at the top of each post 2 - 3 inch bands of No. 3270 silver adhesive-coated reflective sheeting, "Scotchlite," as manufactured by 3M Company or equal. Band shall be located as indicated.

C. Valve indicator

1) For valve post indicators which control fire equipment (sprinklers, standpipes, etc.) paint aboveground portion Red No. 11105.

2) For valve post indicators which do not control fire equipment, paint aboveground portion Yellow No. 13655.

3.3 FIELD QUALITY CONTROL

A. Dry film thickness (DFT) shall be verified by inspection per SSPC PA-2.

B. In addition to meeting the previously specified requirements, demonstrate the mobility of moving components, including but not limited to swinging doors, for inspection by the Buyer. Perform this demonstration after appropriate curing and drying times of the coatings have elapsed and prior to invoicing for final payment.

3.4 PROTECTION OF AREAS AND SPACES

Prior to surface preparation and coating applications, remove, mask, or otherwise protect hardware, hardware accessories, machined surfaces, radiator covers, plates, lighting fixtures, public and private property, and other such items not to be coated that are in contact with surfaces to be coated. Following completion of painting, workmen skilled in the trades involved shall reinstall removed items. Restore surfaces contaminated by coating materials to original condition and repair damaged items.

END OF SECTION

HPS-111-M

STANDARD SPECIFICATION

FOR

IDENTIFICATION OF PIPING SYSTEMS

MATERIAL

9212413032 2

This Specification consists of 3 pages.

Description of Revision		HANFORD PLANT STANDARDS DOE - RICHLAND, WASHINGTON	Number
Updated			HPS-111-M
Prep. or Rev. by JMAG. Ivan MA Garcia	Orig. Issue Date 7-12-57	MECHANICAL STANDARD	
Approved [illegible] DOE	Date 1-22-79	SPECIFICATION FOR IDENTIFICATION OF PIPING SYSTEMS	Revision No. 1

THIS PAGE INTENTIONALLY
LEFT BLANK

STANDARD SPECIFICATION FOR IDENTIFICATION OF PIPING SYSTEMS

1. GENERAL

The identification of piping systems shall be in accordance with the American Standard Scheme for the Identification of Piping Systems, ANSI A13.1, as supplemented herein.

2. LOCATION

a. Except as provided below, identification shall be located adjacent to outlets, valves, flanges, unions, changes-in-direction, where pipes pass through walls, floors, or ceilings, and along an uninterrupted length of pipe at maximum intervals of 50 feet. Each line or branch in a room shall have at least one identification.

b. Where a number of outlets, valves, flanges, unions, or changes of direction make identification at each item impracticable, they may be spaced at approximately 6 foot intervals, preferably adjacent to valves.

c. For WATER SPRINKLER FIRE PROTECTION SYSTEMS, only feed mains, cross mains, and risers 3-inch nominal diameter and larger shall be identified. Line identification shall be located at test and drain valves; on each side of partitions, floors, and ceilings; and along uninterrupted lengths of pipe at maximum intervals of 50 feet. For other types of fire protection systems, identification shall be located as specified in paragraph 2. a.

d. Legend shall be located on the pipe so that it can be read easily from the operator's normal viewing position. Labels shall be placed on the readily visible lower quadrant of overhead pipes, and on an upper quadrant of pipes below normal eye level. Above ceilings, labels shall be placed in locations most readily visible from access positions.

3. LEGEND

a. Positive identification of a piping system content shall be by lettered legend giving the name of the content in full or abbreviated form. Legends may also be as specified on drawings or in other specifications.

b. Abbreviation of words in the legend may be used only where unavoidable due to space limitations.

c. The legend shall include the nominal operating pressure for steam, compressed air, and when specified the pressure or temperature for other materials.

THIS PAGE INTENTIONALLY
LEFT BLANK

d. Legend for refrigerant shall include the number of the refrigerant; for example, Refrigerant 12.

e. An arrow indicating the direction of flow shall be placed near the legend on pipes normally having a flow in one direction only. The color and size of the arrow shall be consistent with the color and size of the legend letters.

f. Legend shall be located on or adjacent to the classification color band.

4. APPROVED LABELS

a. Legend and color classification may be accomplished by the use of approved labels conforming to this Standard and which are suitable for the temperature of the surface to which they are to be applied. Approved labels include the following:

ALL-TEMPERATURE PIPE MARKERS
W. H. Brady Company
727 West Glendale Avenue
Milwaukee, Wisconsin 53201

TEL-A-PIPES
Westline Products Division
Thomas & Betts Co.
220 S. Rose St.
Los Angeles, California 90012

b. Single-word labels may be combined to form complete legends. Individual-letter labels shall not be so combined.

c. Labels shall be installed after painting is complete.

5. CLASSIFICATION COLOR

a. When use of classification colors is specified, they shall conform to Table I.

TABLE I

CLASSIFICATION	BAND OR LABEL COLOR	LEGEND/ ARROW COLOR	APPROXIMATE COLOR NO. PER FEDERAL STD. NO. 595
Fire Protection	Red	White (17875)	11105 (red)
Dangerous	Yellow	Black (17038)	13655 (yellow)
Safe	Green	Black (17038)	14260 (green)
Life Support	Blue	White (17875)	15102 (blue)

b. Paint, if used, shall conform to Federal Specification TT-E-489 Class A, for synthetic gloss enamel.

c. Classification colors for commonly used materials shall conform to Table II, following:

THIS PAGE INTENTIONALLY
LEFT BLANK

TABLE II
CLASSIFICATION COLORS FOR COMMONLY USED MATERIALS

MATERIAL	COLOR	MATERIAL	COLOR
Acetylene	Yellow	Nitrogen-Hydrogen, Mixed	Yellow
Air	Green*	Oil, Fuel	Yellow
Air, Breathing	Blue	Oil, Hydraulic	Yellow
Ammonia	Yellow	Oil, Tempering	Green#
Argon	Green*	Oxalic Acid	Yellow
Boiler Blow-Off	Yellow	Oxygen	Yellow
Boiler Feed Water	Yellow	Phosphoric Acid	Yellow
Brine, Sodium Chloride	Green#	Propane	Yellow
Butane	Yellow	Sewer, Chemical Waste	Yellow
Carbon Dioxide, Fire	Red	Sewer, Contaminated	Yellow
Carbon Dioxide, Process	Yellow	Sewer, Sanitary	Yellow
Carbon Tetrachloride	Yellow	Sodium Carbonate	Green#
Chemical Feed, Phosphate	Yellow	Sodium Dichromate	Green#
Chemical Feed, Sulphite	Yellow	Sodium Hydroxide	Yellow
Chlorine	Yellow	Sodium Silicate	Green#
Condensate	Yellow	Sodium Thiosulphate	Yellow
Refrigerant	Green*	Steam	Yellow
Gasoline	Yellow	Sulfur Dioxide	Yellow
Glycol, Ethylene	Green#	Sulfuric Acid	Yellow
Helium	Green*	Vacuum, Air Sampling	Yellow
Hydrochloric Acid	Yellow	Vacuum, Laboratory	Yellow
Hydrofluoric Acid	Yellow	Vacuum, Process	Yellow
Hydrofluoric Acid Gas	Yellow	Water, Distilled	Green#
Hydrogen	Yellow	Water, Fire Protection	Red
Hydrogen Iodide	Yellow	Water, Hydraulic	Green#
Methane	Yellow	Water, Process	Green#
Mixed Acid	Yellow	Water, Raw	Green#
Nitric Acid	Yellow	Water, Safety Shower	Green
Nitrogen	Green*	Water, Sanitary	Green#
		Water, Hot Sanitary	Yellow

* Yellow for pressure above 30 psig
\# Yellow for pressure above 125 psig

THIS PAGE INTENTIONALLY
LEFT BLANK

SECTION 13120
BUILDING ASSESSORIES

PART 1 GENERAL

1.1 SUMMARY

This section covers the technical requirements for furnishing and installation of all materials required to completely enclose the buildings.

1.2 REFERENCES

The publications listed below form a part of this specification to the extent referenced. The publications are referred to in the text by the basic designation only.

AMERICAN IRON AND STEEL INSTITUTE (AISI)

AISI S6-671	1986 Specification for the Design of Cold-Formed Steel Structural Members

AMERICAN SOCIETY FOR TESTING AND MATERIALS (ASTM)

ASTM A446	1989 Steel Sheet, Zinc-Coated (Galvanized) by the Hot-Dip Process, Structural (Physical) Quality
ASTM A526	1985 Steel Sheet, Zinc-Coated (Galvanized) by the Hot-Dip Process, Commercial Quality
ASTM A591	1989 Standard Specification for Steel Sheet, Cold-Rolled, Electrolytic Zinc-Coated
ASTM A792	1989 Standard Specification for Steel Sheet, Aluminum-Zinc Alloy-Coated by the Hot-Dip Process
ASTM C236	1989 Test for Steady-State Thermal Performance of Building Assemblies by Means of the Guarded Hot Box
ASTM C273	1961 (R 1988) Shear Test in Flatwise Plane of Flat Sandwich Construction of Sandwich Cores
ASTM C578	1985 Preformed, Cellular Polystyrene Thermal Insulation

ASTM C920	1987 Elastomeric Joint Sealants
ASTM D522	1988 Mandrel Bend Test of Attached Organic Coatings
ASTM D523	1989 Test for Specular Gloss
ASTM D659	1986 Evaluating Degree of Chalking of Exterior Paints
ASTM D714	1987 Evaluating Degree of Blistering of Paints
ASTM D822	1989 Recommended Practice for Operating Light and Water-Exposure Apparatus (Carbon-Arc Type) for Testing Paint, Varnish, Lacquer and Related Products
ASTM D870	1987 Water Immersion Test of Organic Coatings on Steel
ASTM D968	1981 (R 1986) Abrasion Resistance of Organic Coatings by Falling Abrasive
ASTM D1308	1987 Affect of Household Chemicals on Finishes
ASTM D1735	1987 Water Fog Testing of Organic Coatings
ASTM D2244	1989 Calculation of Color Differences from Instrumentally Measured Coordinates
ASTM D2247	1987 Testing Water Resistance of Coatings in 100 Percent Relative Humidity
ASTM E84	1989 (Rev. A) Surface Burning Characteristics of Building Materials
ASTM E283	1984 Test for Rate of Air Leakage Through Exterior Windows, Curtain Walls and Doors
ASTM E331	1986 Test for Water Penetration of Exterior Windows, Curtain Walls and Doors by Uniform Pressure Differences
ASTM G23	1989 Operating Light - Exposure Apparatus (Carbon-Arc Type) With and Without Water for Exposure of Nonmetallic Materials

9212413032 7

BUILDERS HARDWARE MANUFACTURERS ASSOCIATION, INC. (BHMA)

BHMA 101	1988 Butts and Hinges (ANSI/BHMA A156.1)
BHMA 111	1988 Template Hinge Dimensions (ANSI/BHMA A156.7)
BHMA 301	1986 Door Controls - Closers (ANSI/BHMA A156.4)
BHMA 311	1988 Door Controls - Overhead Holders (ANSI/BHMA A156.8)
BHMA 621	1987 Mortise Locks and Latches (ANSI/BHMA A156.13)
BHMA 701	1984 Exit Devices (ANSI/BHMA A156.3)
BHMA 1201	1989 Auxiliary Hardware (ANSI/BHMA A156.16)
BHMA 1301	1987 Materials and Finishes (ANSI/BHMA A156.18)

DOOR AND HARDWARE INSTITUTE (DHI)

DHI A115.1	1982 Preparation for Mortise Locks for 1-3/8 Inch and 1-3/4 Inch Doors

FEDERAL SPECIFICATIONS (FS)

FS-TT-S-001657	1970 Sealing Compound Single Component, Butyl Rubber Based, Solvent Release Type (for Buildings and Other Types of Construction)
FS-TT-C-1796	1974 (Rev. A) Caulking Compounds, Metal Seam and Wood Seam
FS-TT-S-001543A	1971 Sealing Compound: Silicone Rubber Base (for Caulking, Sealing and Glazing in Buildings and Other Structures)

FEDERAL STANDARD (FED-STD)

FED-STD 595B	1989 Colors Used in Government Procurement

NATIONAL COIL COATERS ASSOCIATION (NCCA) STANDARDS

NCCA II-6	Test Method of Measurement of Impact Resistance of Painted Aluminum, Steel and Galvanized Steel
NCCA III-1	Standard Method for Water Immersion Test of Organic Coating on Metallic Surfaces
NCCA III-4	Standard Method to Water Testing of Organic Coating
NCCA III-6	Standard Method for Condensation - Humidity Testing of Organic Coatings on Metallic Surfaces

STEEL DOOR INSTITUTE (SDI)

SDI 100	1985 Recommended Specifications - Standard Steel Doors and Frames
SDI 107	1984 Hardware on Steel Doors (Reinforcement - Application)

1.3 **SUBMITTALS**

Submit the following in accordance with the Vendor Drawing and Data Requirements section of the Order/Subcontract.

1.3.1 Manufacturer's Catalog Data:

Submit catalog cuts, technical data sheets, and descriptive literature.

1.3.1.1 Rigid Insulation

A. Insulation

B. Adhesive

C. Clip fasteners

1.3.1.2 Preformed Metal Roofing and Siding, Flashing and Sheet Metal

A. Flat and corrugated metal sheets

B. Panels

C. Accessories

D. Fasteners

1.3.1.3 Sealants

A. Sealants

B. Backstop materials

Data for the sealants shall include shelf life, recommended cleaning solvents, and manufacturer recommended installation procedure.

1.3.1.4 Steel Doors and Frames

A. Doors

B. Frames

C. Accessories

Submit manufacturer's descriptive literature for doors, frames, and accessories. Include data and details on door construction, panel (internal) reinforcement, insulation, and door edge construction.

1.3.1.5 Finish Hardware

A. Hardware items

Submit for each different item.

B. Hardware schedule

Submit hardware schedule in the following form:

Hardware Item	Quantity	Size	Reference Publication Type No.	Mfr. Name and Catalog No.	Key Control Symbols	UL Mark (If fire rated and listed)	BHMA Finish Designation

1.3.2 Drawings

Indicate sizes, thicknesses, dimensions, fastenings and anchoring methods, expansion joints, and other provisions necessary for thermal expansion and contraction. Scaled manufacturer's catalog data may be submitted for factory fabricated items.

1.3.2.1 Preformed Metal Roofing

A. Panel and fastener layouts

B. Joints

C. Corners

D. Supports

E. Anchorages

F. Trim

G. Flashing

H. Closures and special details

1.3.2.2 Preformed Metal Siding

A. Layout of structural subgirts.

B. Location and lengths of panels.

C. Erection and fastening procedure.

D. Type, composition and allowable load for each type of fastener.

E. Detailed list of materials.

F. Installation instructions.

1.3.2.3 Steel Doors and Frames

Show elevations, construction details, metal gauges, hardware provisions, and installation details.

1.3.3 Certificates of Compliance

1.3.3.1 Rigid Insulation

A. Insulation

B. Adhesive

2212413031

1.3.3.2 Preformed Metal Roofing and Siding

Certify that materials will be in full compliance with this specification. Certification shall accompany design computations when submitting placement drawings for approval. When completed, copies of certified material test reports (CMTR) shall be furnished to Buyer.

1.3.3.3 Sealants

A. Sealants

B. Backstops

1.3.3.4 Steel Doors and Frames

A. Doors

B. Frames

C. Accessories

Submit certificates attesting that doors, frames, and accessories meet the requirements specified herein. Include the model of each door.

1.3.4 Samples

1.3.4.1 Preformed Metal Roofing and Siding

A. Submit samples of each type of material to be installed on project.

B. Submit color samples of each color specified for steel roofing and siding, on minimum 4 inch by 6 inch swatches of metal, identical to that proposed to be used.

1.3.4.2 Sealants

Manufacturer's Standard Color Charts

A. Sealants

Submit not less than 9 different colors to match adjacent wall or roof colors noted on Contract Drawings (3 samples for each three colors noted on Contract Drawings).

1.3.5 Design Calculations

1.3.5.1 Preformed Metal Roofing

A. Roof panels shall be capable of withstanding design wind loads as outlined below.

B. Provide test results to substantiate pull-out and pull-over values in pounds for any fastener to be used.

C. Roof panels and fasteners shall be designed to resist an uplift due to wind suction of 46.0 psf.

D. Design calculations shall be signed by a registered civil or structural engineer, licensed in the State of Washington.

1.3.5.2 Preformed Metal Siding

A. Substantiate that wall assemblies and fasteners design will withstand the specified wind loads of appendices acting uniformly over maximum indicated span, measured center to center of supports, without exceeding the maximum allowable unit stress based on actual thickness of metal and without exceeding specified deflections or wind pressures.

B. Show that actual stress in the core does not exceed allowable stresses.

C. Show that actual panel design stress does not exceed allowable stresses.

D. Design calculations shall be signed by a registered civil or structural engineer, licensed in the State of Washington.

1.3.6 Test Reports

1.3.6.1 Preformed Metal Roofing

Factory Test Reports

A. Formability test

B. Weathering test

C. Chalking resistance test

D. Color change test

E. Specular gloss test

F. Color coating abrasion resistance tests

G. Humidity tests

1.3.6.2 Preformed Metal Siding

A. Submit test results from an independent laboratory indicating that siding conforms with Paragraph 2.3.6, Performance and Tests, of this specification.

1.3.6.3 Sealants

A. Indicate sealant compatibility with commonly used substrates.

1.3.6.4 Finish Hardware

A. Hardware items

Indicate that each item listed under paragraph entitled "Hardware Items" meets the standard listed for that item. A copy of the listing of proposed hardware items in the current applicable BHMA directories of certified products may be submitted in lieu of test reports.

1.3.7 Factory tests for Prefinished Metal Roofing and Siding performed by the Seller.

1.3.7.1 Formability Test

In accordance with ASTM D522, finish coating system shall show no microchecking of exterior film with no loss of adhesion, when subjected to 180 degree bend over 1/8 inch diameter mandrel and 3/8 inch diameter mandrel for coatings 4 mils or thicker.

1.3.7.2 Weathering Test

Sample of finished-coated sheet shall withstand weathering test for minimum of 2,000 hours in accordance with ASTM G23 without cracking, peeling, blistering, loss of adhesion of finish coating system or corrosion of base metal. Finish coating system that can be readily removed from base metal with penknife blade or similar instrument shall be considered to indicate loss of adhesion.

1.3.7.3 Chalking Resistance

After 2,000-hour weathering test, finish coating system shall not chalk greater than No. 8 rating when measured in accordance with ASTM D659 test procedures.

1.3.7.4 Color Change

After 3,000-hour weathering test, color change of finish coating system shall not exceed five NBS units when measured in accordance with ASTM D2244 test procedures.

1.3.7.5 Specular Gloss

Finished surface shall have specular gloss value for the colors selected under Federal Standard 595B, when measured in accordance with ASTM D523.

1.3.7.6 Abrasion Resistance Test for Color Coating for Tertiary Zones

When subjected to falling sand test, in accordance with ASTM D968, finish coating system shall withstand minimum of 50 liters of sand per mil of coating thickness before appearance of base metal.

1.3.7.7 Humidity Test for Tertiary Zones

When subjected to humidity cabinet test in accordance with ASTM D2247 for 1,000 hours, factory-finished, organic-coated panel shall receive rating of few No. 8 blisters as determined by ASTM D714 with no loss of adhesion.

PART 2 PRODUCTS

2.1 **RIGID INSULATION**

2.1.1 Thermal Resistance Value (R-Value)

Insulation R-11

2.1.2 Board Insulation - Polystyrene

ASTM C578, Type I, except a flame spread rating of 25 or less and a smoke developed rating of 200 or less when tested in accordance with ASTM E84.

2.1.3 Accessories

2.1.3.1 Adhesive

As recommended by the insulation manufacturer.

2.1.3.2 Clip Fasteners

Zinc-coated steel consisting of a perforated base plate with a projecting split prong of appropriate type and length to penetrate

9 2 1 2 4 1 3 0 3 3 5

insulation the full thickness of the insulation and bent back flush with the insulation surface.

2.1.3.3 Duct Tape

As recommended by the insulation manufacturer.

2.2 ROOFING PANELS

Thickness of sheet for panels shall be not less than specified. Where gauges are specified, gauges are subject to normal manufacturing tolerances.

2.2.1 Coated Steel Panels

2.2.1.1 Shape

Roof panels shall be rolled formed "standing seam" 2 foot wide with 2 major corrugations, 2 inches high, 24 inches on center and minor corrugations 6 inch on center between the major corrugations the entire length of the panel.

2.2.1.2 Material and Coating

Form panels from steel conforming to ASTM A446, Structural Grade A, galvanized coating conforming to ASTM A526, Class G-90; or steel-coated with aluminum-zinc alloy conforming to ASTM A792, except that coating chemical composition shall be approximately 55 percent aluminum, 1.6 percent silicon, and 43.4 percent zinc with minimum coating weight of 0.5 ounce per square foot.

2.2.1.3 Gauge

Minimum 24 U.S. Standard Gauge for roof panels, but in no case lighter than required to meet maximum deflection requirements specified.

2.2.1.4 Finish Coating System

Factory-applied, total dry film thickness of 5.0 mils minimum for roof panel. Provide finish coating system on both sides of panel. Color as indicated on the drawings.

2.2.1.5 Accessories

Provide sheet metal flashings, trim moldings, closure strips, caps, and other preformed metal panel accessories, of same material and finish as panels, except accessories that are concealed after installation, and are aluminum or zinc-coated steel may be provided unfinished. Provide metal thickness not less than that of panels. Provide molded closure strips of

closed-cell or solid-cell synthetic rubber, neoprene, or polyvinyl chloride premolded to match configurations of preformed metal panels.

2.2.1.6 Fasteners

Provide fasteners for attaching panels to structural supports and to adjoining panels as approved and in accordance with printed manufacturer's recommendations. Provide fastening system to withstand design loads indicated. Fasteners shall be Series 305 stainless steel. Fasteners, except those having integral hexagonal washer heads and those having aluminum drive caps, shall have composite metal and neoprene washers. Provide fasteners having integral hexagonal washer heads and fasteners having aluminum drive caps with polychloroprene washers.

2.2.1.7 Joint-Sealing Material

FS TT-C-1796, Type II, Class B ribbon form sealant.

2.3 **SIDING PANELS**

Exterior siding shall be a factory-assembled, preinsulated sandwich panel of two (2) steel skins bonded to a closed-cell isocyanurate foam, consisting of the following:

2.3.1 Total Assembly

Basic panel shall be minimum 30 inches wide and 2 inches thick. Side joint shall be of a tongue and groove and shiplap design, permitting use of fasteners, installed from exterior, that are completely concealed within joint. Factory install sealant in interior and exterior female joints. Fastener shall provide positive resistance to negative load pull-off. Fabricate entire assembly in strict accordance with approved shop drawings, referenced standards, and this specification.

2.3.2 Exterior Face

Steel face shall be formed of minimum 24 gauge galvanized steel, conforming to ASTM A446, Grade A, hot dipped, commercial quality, galvanized coating, designation G-90, and conforming with AISI S6-671.

2.3.3 Interior Liner

Liner face panel shall be of minimum 24 gauge, hot dipped, galvanized steel, designation G-60, conforming with the AISI S6-671.

2.3.4 Insulation

A. Poured-in-place isocyanurate foam core of each panel shall have the following minimum physical properties:

Density	2.5 lbs/cu. ft. minimum
Shear Strength	20 psi minimum per ASTM C-273
Tensile Strength	30 psi minimum
Compressive Strength	20 psi minimum

B. Core shall withstand humidity aging at 158°F and 100 percent relative humidity for a period of 14 days with a volume increase not greater than 6.6 percent.

C. Core shall withstand heat aging at 200°F for a period of 14 days and the volume expansion shall not exceed 4.0 percent.

D. Core shall withstand cold aging at -10°F for a period of 14 days with loss in volume not greater than 0.3 percent.

E. Core shall have a 93 percent closed cell structure.

2.3.5 Color Coating

Exterior and interior panels, flashing, and trim pieces shall receive a factory applied polyvinylidene fluoride (PVF2) coating minimum 70 percent Kynar content finish on continuous process coil coating equipment. Finish shall be a coating system that meets requirements of performance features and tests noted in Paragraph 2.3.6.

Provide coatings in the following colors:

A. Primer coats: Panel manufacturer's standard color.

B. Finish coats: Federal Standard 595B, color shall be as noted on Contract Drawings.

2.3.6 Performance and Tests

A. Tests shall have been performed upon a panel or panels of like or similar configurations as those proposed for this project.

B. For air leakage and water penetration tests, tested panels shall have identical type joints as panels proposed for installation.

C. Structural

1) Wall assembly shall be capable of withstanding design wind loads as outlined in Paragraph 3) below.

2) Provide test results to substantiate pull-out and pull-over values in pounds for any fastener to be used.

3) Loadings

Factory insulated steel siding assemblies shall be designed to resist the wind loading. Wind parameters are: inward pressure of 17.2 psf and an outward negative pressure of 21.9 psf. Maximum allowable deflection shall be $\ell/180$.

D. Thermal Properties

Preinsulated panels shall provide a maximum "U" value of .068 Btu/hr/sq. ft./°F when corrected to a 15 mph wind condition, when tested in accordance with ASTM C236.

E. Air Leakage

Air leakage shall not exceed 0.02 cfm per square foot of wall area at a pressure differential of 20 pounds per square foot when tested in accordance with ASTM E283.

F. Water Penetration

There shall be no water leakage at 6.24 psf air pressure differential, when tested in accordance with ASTM E331.

G. Fire Hazard Classification

Test panels in accordance with ASTM E84, for surface burning characteristics and have values not exceeding the following:

Flame Spread	25
Fuel Contributed	0
Smoke Developed	200

2.3.7 Exterior Finish Coating Tests

A. General

Finish coating shall be 100 percent free of any paint holidays, drip marks or roll marks that are visible at a distance of 5 feet - 0 inches with sheets standing vertically, in a light producing a minimum of 200 foot candles three feet from floor.

9 2 1 2 4 1 3 0 3 3 9

B. Specular Gloss

Gloss shall be minimum 40 percent as determined by tests on a flat sample at 60°F in accordance with ASTM D523.

C. Outdoor Exposure

Coating shall be capable of withstanding five years continuous exposure oriented 45° South, or ten years continuous exposure oriented 90° South and test panels shall show no evidence of checking, blistering, or loss of adhesion. There shall be only slight to moderate chalking (#8 Standard of ASTM D659) and a slight fading (5 NBS Units of Fade) of film.

D. Weatherometer

When subjected to an accelerated weathering test, in accordance with ASTM D822 for 3,000 hours, color change shall be less than five NBS units in accordance with ASTM D2244, and chalking shall be less than No. 3 rating according to ASTM D659. There shall be no checking, blistering or adhesion of coating system.

E. Bend Test

Sample shall be capable of being bent 180° around a 1/4 inch mandrel with no visible signs of failure and no loss of adhesion when tested with a cellophane tape.

F. Impact Test

When subjected to 80 in/lbs as recorded by a Gardner Impact Tester in accordance with NCCA II-6, the coating shall show no loss of adhesion. Test shall employ a 9/16 inch ball, and there shall be no loss of adhesion when tested with a cellophane tape.

G. Water Immersion

A specimen shall remain submerged in distilled water at a constant temperature of 100°F in accordance with ASTM D870, and NCCA III-1, for 1,000 hours, with no evidence of softening, blistering, or loss of adhesion.

H. Water Fog Test

When subjected to water fog spray in accordance with ASTM D1735 and NCCA III-4 for 2,000 hours, coating shall show no softening, blistering, or loss of adhesion.

I. Humidity Test

When subjected to a test in accordance with ASTM D2247 and NCCA III-6 for 1,000 hours, coating shall show no softening, blistering, or loss of adhesion.

J. Pollution Resistance

When exposed to 10 percent hydrochloric acid and 10 percent sulfuric acid solutions for 24 hours each in accordance with ASTM D1308 Procedure 5.3, coating shall show no softening, blistering, or loss of adhesion.

K. Fatigue Test

There shall be no evidence of metal/foam interface delamination when panel is tested by simulating wind loads of 20 psf (Positive and Negative loads), when applied for two million alternating cycles.

L. Bond Strength

No metal primer interface corrosion and/or delamination shall occur after 1,000 hours at 135°F and 100 percent relative humidity. No delamination shall occur after 2-1/2 hours in a 2 psi 212°F autoclave.

2.3.8 Accessories

A. Factory form metal flashing and closures including gutters and down spouts, trims around door/pipe and other openings from materials of same gauge, finish and color as materials or exterior panels. Hem edges of flashings and closures.

B. Cadmium plated, carbon steel or stainless steel self-tapping screws, complete with compression seals and washers; designed to resist maximum negative pull-off loads per Section 2.3.6C above and to mechanically attach panels to subgirts. Paint heads of exposed fasteners to match color of siding. Install fastener complete with compression seals and washers.

2.3.9 Sealants

A. Concealed male/female joint - factory applied: one part, nonskinning, butyl based, pumpable sealant, conforming with FS-TT-S-001657.

B. Concealed over base angle and structural girts - field applied: one part, vulcanized butyl rubber base, compressible extruded tape wound on release paper rolls similar to PTI-606 as manufactured by Protective Treatments Incorporated.

C. Exposed perimeter - field applied: one part, surface skinning, silicone elastomeric sealant, for use in hand or air pressure caulking guns, conforming with FS-TT-S-001543A.

D. Sealant colors: concealed sealants to be gray or neutral, exposed sealant to match contiguous metal siding and/or trim.

2.3.10 Fabrication and Manufacture

2.3.10.1 The bond between the core and steel faces shall be a uniform chemical bond formed during foaming-in-place application of the core. The bond shall fully develop the shear and tensile strength of the panel core to ensure a structural composite section. Adhesion of the core material to the panel facing shall be equal to the tensile strength of the core itself.

Factory insulated panels shall be smooth and flat with 1/4 inch deep ribs similar or equal to Temp-Con panels as manufactured by EMCO Enterprises Inc.

2.3.10.2 The factory shall publish and make available to the Buyer a Factory Quality Assurance Manual and maintain continuous records of daily quality control inspection test records.

2.4 **SEALANTS**

Provide sealant that has been tested and found suitable for the substrates to which it will be applied.

2.4.1 Interior Sealant

ASTM C920, Type S, Grade NS, Class 12.5, Use NT. Location(s) and color(s) of sealant shall be as follows:

	LOCATION	COLOR
A.	Small voids between walls and adjacent door frames, surface-mounted equipment and fixtures, and similar items	Match adjacent wall color
B.	Perimeter of frames at doors, louvers, which adjoin exposed interior metal wall liner surfaces	Match adjacent wall color

2.4.2 Exterior Sealant

For joints in vertical surfaces, provide ASTM C920, Type S or M, Grade NS, Class 25, Use NT. For joints in horizontal surfaces, provide ASTM C920, Type S or M, Grade P, Class 25, Use NT. Location(s) and color(s) of sealant shall be as follows:

	LOCATION	COLOR
A.	Joints and recesses formed where frames and subsills of windows, doors, louvers, and vents adjoin metal frames. Use sealant at both exterior and interior surfaces of exterior wall penetrations	Match adjacent surface color
B.	Voids where items pass through exterior walls	Match adjacent surface color
C.	Metal-to-metal joints where sealant is indicated or specified	Match adjacent surface color

2.4.3 Backstops

Provide glass fiber roving or neoprene, butyl, polyurethane, or polyethylene foams free from oil or other staining elements as recommended by sealant manufacturer. Backstop material shall be compatible with sealant. Do not use oakum and other types of absorptive materials as backstops.

2.4.4 Cleaning Solvents

Provide type(s) recommended by the sealant manufacturer except for aluminum and bronze surfaces that will be in contact with sealant.

2.5 STEEL DOORS AND FRAMES

2.5.1 Steel Doors

SDI 100, except as specified otherwise. Doors shall be either hollow steel construction or composite construction. Prepare doors to receive hardware specified. Exterior doors shall have top edge closed flush. Doors shall be 1-3/4 inches thick, unless otherwise indicated. Exterior doors shall be insulated.

2.5.1.1 Standard Steel Door Frames

SDI 100, except as otherwise specified. Form frames to sizes and shapes indicated, with welded corners.

2.5.1.2 Anchors

Provide anchors to secure the frame to adjoining construction. Provide steel anchors, zinc-coated or painted with rust-inhibitive paint, not lighter than 18 gauge.

2.5.1.3 Removable Mullions

Supplied and part of finish hardware.

2.5.2 Hardware Preparation

Reinforce, drill, and tap doors and frames to receive finish hardware. Prepare doors and frames for hardware in accordance with the applicable requirements of SDI 107 and DHI A115.1. Drill and tap for surface-applied hardware at the project site. Build additional reinforcing for surface-applied hardware into the door at the factory. Locate hardware in accordance with the requirements of SDI 100, as applicable. Punch door frames with the exception of frames that will have weatherstripping gasketing, to receive a minimum of two rubber or vinyl door silencers on lock side of single doors and one silencer for each leaf at heads of double doors. Set lock strikes out to provide clearance for silencers.

2.5.3 Finishes

2.5.3.1 Factory-Primed Finish

Unless specified otherwise, phosphate treat and factory prime metal doors and frames as specified in SDI 100.

2.5.3.1.1 Electrolytic Zinc-Coated and Factory-Primed Finish

Fabricate doors and frames from electrolytic zinc-coated steel, ASTM A591, Commercial Quality, Coating Class A. Phosphate treat and factory prime zinc-coated surfaces as specified in SDI 100.

2.5.4 Fabrication and Manufacture

2.5.4.1 Finished doors and frames shall be strong and rigid, neat in appearance, and free from defects, waves, scratches, cuts, dents, ridges, holes, warp, and buckle. Molded members shall be clean cut, straight, and true, with joints coped or mitered, well formed, and in true alignment. Dress exposed welded and soldered joints smooth. Fabricate door frame sections for use with the wall construction indicated. Corner joints shall be well formed and in true alignment. Conceal fastenings where practicable.

2.5.5 Deliver doors, frames, and accessories undamaged and with protective wrappings or packaging. Strap welded frames in pairs,

with one frame inverted, or provide temporary steel spreaders securely fastened to the bottom of each frame. Store doors and frames on platforms under cover in clean, dry, ventilated, and accessible locations, with 1/4 inch airspace between doors. Remove damp or wet packaging immediately and wipe affected surfaces dry. Replace damaged materials with new.

2.6 FINISH HARDWARE MATERIALS

Hardware to be applied to metal doors and frames shall be made to template. Promptly furnish template information or templates to door and frame manufacturers. Template hinges shall conform to BHMA 111. Coordinate hardware items to prevent interference with other hardware.

2.6.1 Hardware Items

Conform to the respective standards listed and to requirements specified herein. Hinges, locks, latches, bolts, and closers shall be clearly and permanently marked with the manufacturer's name or trademark where it will be visible after the item is installed. For closers with covers, the name or trademark may be beneath the cover. Provide hardware items as specified below and as listed under paragraph entitled "Hardware Sets."

2.6.1.1 Hinges

BHMA 101, 4-1/2 by 4-1/2 inches unless otherwise specified. Construct loose pin hinges for exterior doors and reverse-bevel interior doors so that pins will be nonremovable when door is closed. Other antifriction bearing hinges may be provided in lieu of ball-bearing hinges.

2.6.1.2 Mortise Locks and Latches

BHMA 621, Series 1000, Operational Grade 1, Security Grade 2. Knobs and roses of mortise locks shall have screwless shanks and no exposed screws.

2.6.1.3 Provide panic hardware, or fire exit hardware and auxiliary items. BHMA 701, Grade 1. Provide adjustable strikes for rim type and vertical rod devices. Provide open back strikes for pairs of doors with mortise and vertical rod devices. Touch bars may be provided in lieu of conventional crossbars and arms.

2.6.1.4 Lock Cylinders

Provide cylinders for new locks, including locks provided under other sections of this specification. Cylinders shall have five pin tumblers and shall be products of the same manufacturer.

Cylinders shall have interchangeable cores which are removable by a special control key. Provide construction interchangeable cores.

2.6.1.5 Lock Trim

Cast, forged, or heavy wrought construction and commercial plain design. In addition to meeting test requirements of BHMA 621, knobs, roses, and escutcheons shall be 0.050 inch thick if unreinforced. If reinforced, outer shell shall be 0.035 inch thick and combined thickness shall be 0.070 inch, except knob shanks shall be 0.060 inch thick. Provide lever handles in lieu of knobs where specified in paragraph entitled "Hardware Sets."

2.6.1.6 Keys

Furnish one file key, one duplicate key, and one working key for each keying system. Furnish one control key for removable cores. Stamp each key with appropriate key control symbol and "U.S. property - Do not duplicate." Do not place room number on keys.

2.6.1.7 Closers

BHMA 301, Series C02000, Grade 1, with optional feature (o.f.) PT 4C, unless otherwise specified. Provide closers complete with brackets, arms, mounting devices, fasteners, and other features necessary for the particular application. Size closers in accordance with manufacturer's recommendations, or provide multi-size closers, Sizes 1 through 6, and list sizes in the Hardware Schedule.

2.6.1.8 Identification Marking

In addition to the manufacturer's name or trademark, each closer shall bear the manufacturer's size designation where it will be visible after installation.

2.6.1.9 Overhead Holders

BHMA 311. Overhead door holders and hold open device C12511 bronze with 626 satin chrome finish.

2.6.1.10 Door Stops and Silencers

BHMA 1201. Silencers Type L03011. Provide three silencers for each single door, two for each pair.

9 2 1 2 4 1 3 0 3 4 6

2.6.1.11 Weatherstripping

BHMA 1201. A set shall include head and jamb seals and sweep strips. Weatherstripping shall be one of the following:

2.6.1.11.1 Extruded Aluminum Retainers

Extruded aluminum retainers not less than 0.050 inch wall thickness with vinyl, neoprene, silicone rubber, or polyurethane inserts. Aluminum shall be clear natural anodized.

2.6.1.12 Surface Mounted Automatic Door Bottom

A set shall include automatic door bottom, extruded aluminum, clear natural anodized, surface applied. Door bottoms shall have adjustable operating rod and silicone rubber or closed-cell sponge neoprene gasket. Zero No. 361; Pemko No. 430AS; National Guard No. 420; or equal.

2.6.1.13 Rain Drips

Extruded aluminum, not less than 0.08 inch thick, clear anodized. Set drips in sealant conforming to this Section, Sealants, and fasten with stainless steel screws.

2.6.1.13.1 Door Rain Drips

Approximately 1-1/2 inches high by 5/8 inch projection. Align bottom with bottom edge of door. National Guard No. 16AD; Pemko No. 346A; Zero No. 142 or equal.

2.6.1.13.2 Overhead Rain Drips

Approximately 1-1/2 inches high by 2-1/2 inches projection, with length equal to overall width of door frame. Align bottom with door frame rabbet. National Guard No. 16AD; Pemko No. 346A; Zero No. 142 or equal.

2.6.1.14 Special Tools

Provide special tools, such as spanner and socket wrenches and dogging keys, required to service and adjust hardware items.

2.6.1.15 Fasteners

Provide fasteners of proper type, quality, size, quantity, and finish with hardware. Fasteners exposed to weather shall be of nonferrous metal or stainless steel. Provide fasteners of type necessary to accomplish a permanent installation.

9 2 1 2 4 1 3 0 3 4 7

2.6.1.16 Finishes

BHMA 1301. Hardware shall have BHMA 630 finish (satin stainless steel), unless specified otherwise. Provide items not manufactured in stainless steel in BHMA 626 finish (satin chromium plated) over brass or bronze, except surface door closers which shall have prime coat finish Hinges for exterior doors shall be stainless steel with BHMA 630 finish.

2.7 HEATING AND VENTILATING

2.7.1 System Description

Heating and ventilating equipment shall be selected per Attachment A, Equipment data sheets DS-1, DS-2 and DS-3.

2.7.1.1 Raw Water Pump House Heating and Ventilating System

A. Heating system shall consist of two (2) electric unit heaters. Each unit heater shall be equipped with a built-in single stage thermostat.

B. Ventilating system shall consist of two (2) wall exhaust fans, two (2) wall mounted combination fixed louvers with backdraft dampers, bird screen and medium efficiency filters. Each fan shall have a separate local auto-off-fan thermostat switch.

2.7.1.2 Fire Water Pump House Heating and Ventilating System

A. Heating system shall consist of two (2) electric unit heaters. Each unit heater shall be equipped with a built-in single stage thermostat.

B. Ventilating system shall consist of two (2) wall exhaust fans, two (2) wall mounted combination fixed louvers with backdraft dampers, bird screen and medium efficiency filters. Each fan shall have a separate local auto-off-fan thermostat switch.

2.7.1.3 RWX/SWX Manifold Shelter Heating System

Heating system shall consist of one (1) electric unit heater. The unit heater shall be equipped with a built-in single stage thermostat.

9 2 1 2 4 1 5 0 3 4 8

PART 3 EXECUTION

3.1 RIGID INSULATION

3.1.1 Install rigid insulation between roof panel and metal decking and follow manufacturer's fastening and installation recommendations.

3.2 PREFORMED METAL ROOFING

3.2.1 General

Metal roofing shall be installed over rigid insulation, in accordance with manufacturer's approved installation instructions, and approved shop drawings, except as specified otherwise. Install panels in full and firm contact with each other at side and end laps. Where panels are cut in field or where factory-applied coating is damaged and necessary repairs have been made with material of same type and color as finish coating, obtain approval of the Buyer before installation. Correct defects in materials. Remove defective materials which cannot be corrected, and provide non-defective materials. Provide molded closure strips where indicated and whenever panels terminate with open ends after installation.

3.2.2 Roof Panels

Install roofing panels in accordance with the approved shop drawings with longitudinal configurations in the direction of the roof slope. Provide roofing panels in longest lengths obtainable, with end laps occurring only at purlins and structural members to eaves, with no transverse joints. Seal side and end laps with joint-sealing material. Flash seal roof at ridge, eaves and rakes. Provide closure strips, flashing, and sealing material to achieve complete weathertightness. Minimum end laps shall be 8 inches and shall occur only over structural members. Side laps shall be standard overlap or interlocking rib based on manufacturer's standard.

3.2.3 Flashings

Install flashings, related closures, and accessories provided with preformed metal panels in accordance with the approved shop drawings to provide watertight installation. Installation shall allow for expansion and contraction of flashing.

3.2.4 Fastener Installation

Install fastener spacings in accordance with the approved shop drawings. Install fasteners in straight lines within tolerance of 1/2 inch in length of bay. Drive exposed, penetrating-type fasteners normal to surface and to uniform depth to seat washers

with gaskets. Drive so as not to damage factory-applied coating. Provide thermal space blocks at each fastener to provide thermal barrier and to eliminate condensation. Torque used when applying fasteners shall not exceed that recommended by manufacturer. Remove panels damaged by over-torqued fastenings, and provide new panels. Remove metal shavings and fillings from roofs upon completion to prevent rusting and discoloration of panels.

3.3 **PREFORMED METAL SIDING**

3.3.1 A. Inspection

1) Prior to installation of any siding panels, carefully examine installed structural steel and other framing to verify that such work is complete to point where this installation may properly commence.

2) Verify that steel siding and sealants may be installed in strict accordance with design shown on Contract Drawings and approved shop drawings. Ensure that surfaces to which panels are to be applied are free of: rust, mill scale oil, grease, protective coatings, or other deleterious materials.

B. Compatibility

Before application of each required sealant material, utilizing manufacturer's test reports and data sheets, confirm its compatibility with each other material it will be exposed to in joint system.

C. Discrepancies

1) In event of discrepancy, promptly notify Buyer.

2) Do not proceed with installation in areas of discrepancies until authorized by Buyer.

3.3.2 Installation, Application and Erection

3.3.2.1 Panels and Accessories

Erect siding panels and accessories in strict accordance with approved shop drawings, erection procedure, requirements of this specification and as follows:

A. Tolerance

Start all panels true. All horizontal joints shall be level, all vertical side joints plumb.

B. Workmanship

Keep exposed surfaces and edges of steel siding panels clean and free from sealant, metal cuttings, hazardous burrs, and other foreign materials. Remove stained, discolored, or damaged panels from site.

C. Touch-Up

After erection is complete, touch-up scuffs and abrasions due to transportation and erection. Panel manufacturer to provide touch-up paint that will duplicate finish coat on panels.

3.3.2.2 Sealants

Install sealants per manufacturer's recommendations and the approved shop drawings.

3.3.2.3 Fasteners

Concealed fasteners and angle spacers shall be completely hidden after interlocking and engagement of the next adjacent tongue and groove shiplap side joint. Place structural fasteners from exterior side of building during installation.

3.3.3 Field Quality Control

3.3.3.1 Inspection after Installation

Inspect completed installation for conformance with this specification, Contract Drawings and the following:

A. Verify that panels are installed plumb, square and true to line, and that attachments are provided, as shown on approved shop drawings.

B. Ensure that flashings, copings, filler strips, closures and other appurtenances were installed according to Contract Drawings and approved shop drawings.

C. Visually inspect joints and other points where sealant or caulking has been applied to ensure that it has been applied without gaps or air pockets, as indicated on Contract Drawings and in accordance with this specification.

3.4 **SEALANTS**

3.4.1 Preparation - Surface

Surfaces shall be clean, dry to the touch, and free from dirt, frost, moisture, grease, oil, wax, lacquer, paint, or other foreign matter that would tend to destroy or impair adhesion. When resealing an existing joint, remove existing calk or sealant prior to applying new sealant.

3.4.2 Preparation - Sealant

Do not add liquids, solvents, or powders to the sealant. Mix multicomponent elastomeric sealants in accordance with manufacturer's instructions.

3.4.3 Installation, Application and Erection

3.4.3.1 Joint Width-To-Depth Ratios

A. Acceptable Ratios:

JOINT WIDTH	JOINT DEPTH	
	Minimum	Maximum
For metal or other nonporous surfaces:		
1/4 inch (minimum)	1/4 inch	1/4 inch
Over 1/4 inch	1/2 of width	Equal to width

3.4.3.2 Backstops

Install backstops dry and free of tears or holes. Tightly pack the back or bottom of joint cavities with backstop material to provide a joint of the depth specified. Install backstops in the following locations:

A. Where indicated.

B. Where backstop is not indicated but joint cavities exceed the acceptable maximum depths specified in paragraph entitled, "Joint Width-to-Depth Ratios."

3.4.3.3 Sealants

Provide a sealant compatible with the material(s) to which it is applied. Do not use a sealant that has exceeded shelf life or has jelled and can not be discharged in a continuous flow from the gun. Apply the sealant in accordance with the manufacturer's instructions with a gun having a nozzle that fits the joint width. Force sealant into joints to fill the joints solidly without air

pockets. Tool sealant after application to ensure adhesion. Sealant shall be uniformly smooth and free of wrinkles. Upon completion of sealant application, roughen partially filled or unfilled joints, apply sealant, and tool smooth as specified.

3.4.4 Cleaning

Upon completion of sealant application, remove remaining smears and stains and leave the work in a clean and neat condition.

3.5 **STEEL DOORS AND FRAMES**

3.5.1 Installation, Application and Erection

3.5.1.1 Frames

Set frames plumb, align, and braced securely until permanent anchors are set.

3.5.1.2 Doors

Hang doors in accordance with clearances specified in SDI 100. After erection, clean and adjust hardware.

3.5.2 Adjustments

Move all necessary adjustments before doors and hardware are in place to ensure smooth operation of doors and hardware.

3.5.3 Cleaning

Upon completion, clean exposed surfaces of doors and frames thoroughly. Remove mastic smears and other unsightly marks.

3.5.4 Protection

Protect doors and frames from damage. Repair damaged doors and frames prior to completion and acceptance of the project or replace with new, as directed. Wire brush rusted frames until all rust is removed, clean thoroughly, and apply an all-over coat of rust-inhibitive paint of the same type used for shop coat.

3.6 **FINISH HARDWARE**

3.6.1 Installation, Application and Erection

Install hardware in accordance with manufacturers' printed instructions. Provide through bolts where necessary for satisfactory installation.

9 2 1 2 4 1 3 0 3 5 3

3.6.1.1 Weather Stripping Installation

Handle and install weather stripping so as to prevent damage. Provide full contact, weather-tight seals. Doors shall operate without binding.

3.6.1.2 Stop-Applied Weather Stripping

Fasten in place with color-matched sheet metal screws not more than 9 inches o.c. after doors and frames have been finish painted.

3.6.2 Hardware Locations

SDI 100, unless indicated or specified otherwise.

3.6.3 Keys

Tag one set of file keys and one set of duplicate keys.

3.6.4 Field Quality Control

After installation, protect hardware from paint, blemishes, and other damage until acceptance of work. Adjust hinges, locks, latches, bolts, holders, closers, and other items to operate properly. Demonstrate that permanent keys operate respective locks, and give keys to the Buyer.

3.6.5 Schedules

3.6.5.1 Hardware Sets

Hardware templates shall be delivered to the steel door and frame manufacturer for use in fabricating the doors and frames.

3.6.5.2 Hardware Set List:

HW-1

Single Door 3'-0" x 7'-0" x 1-3/4"

1-1/2	Pair Hinges 4-1/2 x 4-1/2*	A5112 x 630 x NRP
1	Lockset	F07 x 630
1	Closer	C02021
1	Overhead Holder Arm	C02051
1	Set Weatherstripping as specified	
1	Surface Mounted Automatic Door Bottom	

*Use 5 inch heavy weight hinges for 4'-0" wide door

HW-2

Pair of Doors 3'-0" x 7'-0" x 1-3/4"		Each Leaf
3	Pair Hinges 4-1/2 x 4-1/2	A5112 x 630 x NRP
2	Exit Devices (Rim Type)	Type 1-05 x 630
2	Pulls/Key Locks/Trim Combination	(at exterior)
1	Removable Mullion	Type 22
2	Closers	C02021
2	Overhead Holder Arm	C02051
2	Set Weatherstripping per leaf as specified	
2	Surface Mounted Automatic Door Bottom	

3.7 HEATING AND VENTILATING SYSTEM

3.7.1 Before installation the Seller shall review all pertinent documentation and verify that the heating and ventilating equipment are furnished in accordance with the Data Sheets DS-1, DS-2, and DS-3 (Attachment A).

The heating and ventilating equipment and components shall be installed in accordance to the manufacturer's instructions, the Contract Drawings, and the requirements of this specification.

After installation each heating and ventilating equipment shall be inspected, checked, and tested according to the Field Inspection and Checkout Checklist attached (Attachment B).

END OF SECTION

9 2 1 2 4 1 3 0 3 5 5

FLUOR DANIEL INC

COMBINATION LOUVER/BACKDRAFT DAMPER/FILTER ASSEMBLY DATA SHEET
ATTACHMENT A

PROJECT : HWVP
BUILDINGS: RWX PUMP HOUSE, FIRE WATER PUMP HOUSE AND RWX/SWX MANIFOLD SHELTER
SPEC NO. : B-595-C-A160-13120

DATA SHEET NO. : DS-1
PAGE NO. : 1 OF 1
PREPARED BY : S. ATTAI
CHECKED BY : R. FLYE
REV. NO. : 0

EQUIPMENT NO. : AI-05AA-001, AI-05AA-002, AI-05AA-003, AI-05AA-004

SELECTION :	SC 3	PERFORMANCE :	
MANUFACTURER (DAMPER)	RUSKIN	PRESSURE DROP, IN. W.G.	0.022
MODEL NO.	ELBD375	LEAKAGE, CFM AT DESIGN FLOW	12
QUANTITY REQUIRED	4		
SIZE (WIDTH X LENGTH), INCHES	48 X 48	OPERATOR SPECIFICATIONS :	N/A
TYPE :		MANUFACTURER *	
MULTIBLADE	YES	MODEL NO. *	
SINGLE BLADE	NO	SIZE	
BLADE ACTION :		POSITIONER	
OPPOSED OR PARALLEL	PARALLEL	LIMIT SWITCH	
DAMPER POSITION :		HAND WHEEL	
VERTICAL- AIR-FLOW HORIZ.	YES	MECH. STOP	
HORIZONTAL- AIR-FLOW VERT.	NO	TORQUE	
		FAIL ACTION	
BLADE :			
TYPE	EXTRUDED ALMINUM	ACCESSORIES : (DAMPER)	
LINKED TOGETHER	YES	FREE AREA , SQFT	7.81
PARALLEL TO SHORT/LONG SIDE		FILTER FRAME DATA:	
		SIZE , INCHES	24 X 24
FRAME :		MATERIAL	16" GALVANIZED STEEL
FLANGE SIZE , INCHES	47 3/4 X 47 3/4	QUANTITY PER LOUVER	4
		FILTER DATA:	
MOUNTING :		MANUFACTURER	AAF
NUMBER OF BOLTS , MINIMUM *	4	MODEL NO.	5700
SIZE OF BOLTS , MINIMUM *	1/2" DIA. A-307	QUANTITY/SIZE/TYPE	16 / 24" X 24"
ACCESSORIES :		CFM PER FILTER	850
BIRDSCREEN *	YES	PRESS. DROP, IN. W.C. (CLEAN)	0.08
COUNTER WEIGHTED *	YES	EFFICIENCY(%), ASHRAE 52	80 - 85 %

REMARKS : SELECT MANUFACTURER AS INDICATED ABOVE OR EQUAL

* TO BE SUPPLIED BY VENDOR.

Attachment A

9212130356

THIS PAGE INTENTIONALLY
LEFT BLANK

FLUOR DANIEL INC

WALL EXHAUST FAN DATA SHEET
ATTACHMENT A

PROJECT : HWVP
BUILDING : RWX PUMP HOUSE, FIRE WATER PUMP HOUSE AND RWX AND SWX MANIFOLD SHELTER
SPEC NO. : B-595-C-A160-13120

DATA SHEET NO. : DS-2
PAGE NO. : 1 OF 1
PREPARED BY : S. ATTAI
CHECKED BY : R. FLYE
REV. NO. : 0

EQUIPMENT NO : SC3	BL-05AB-001 THRU BL-05AB-004			
SELECTION :				
MANUFACTURER	GREENHECK			
MODEL	GWB			
SIZE	18			
QUANTITY REQUIRED	4			
WEIGHT , LBS.	220			
PERFORMANCE :				
AIRFLOW, CFM	3400			
STATIC PRESSURE, W.G.	1.0			
RPM, MAX.	1200			
HP	1.0			
TYPE OF WHEEL	CENTRIFUGAL			
DRIVE TYPE	V-BELT			
MATERIAL OF CONSTRUCTION	ALUMINUM			
FINISH	ALUMINUM			
MOTOR :				
ELECTRICAL TYPE	INDUCTION			
SERVICE FACTOR	1.15			
VOLTS, PHASE, HZ.	480 / 3 / 60			
ENCLOSURE				
FRAME NUMBER				
FULL LOAD RPM				
DUTY RATING	HEAVY			
ACCESSORIES : DISCONNECT SWITCH	YES			
BELT GUARD *	YES			
INLET GRILLE *	YES			
BIRD SCREEN *	YES			
MOUNTING * MINIMUM 4 BOLTS	1/2" DIA. A-307			

REMARKS : SELECT MANUFACTURER AS INDICATED ABOVE OR EQUAL

* TO BE SUPPLIED BY VENDOR.

Attachment A

9212413035 57

THIS PAGE INTENTIONALLY
LEFT BLANK

FLUOR DANIEL INC

ELECTRIC UNIT HEATER DATA SHEET
ATTACHMENT A

PROJECT : HWVP
BUILDING : RWX PUMP HOUSE, FIRE WATER PUMP HOUSE AND RWX/SWX MANIFOLD SHELTER
SPEC NO. : B-595-C-A160-13120

DATA SHEET NO. : DS-3
PAGE NO. : 1 OF 1
PREPARED BY : S. ATTAI
CHECKED BY : R. FLYE

REV. NO. : 0

EQUIPMENT NO. : UH-05AA-001 THRU UH-05AA-005

SELECTION : SC3	UH-05AA-001 AND 002	UH-05AA-003 AND 004	UH-05AA-005	
MANUFACTURER	BRASCH	BRASCH	BRASCH	
MODEL NO.	BTUH-7.5-4803	BTUH-10-4803	BTUH-3-4803	
QUANTITY REQUIRED	2	2	1	
WEIGHT , LBS.	60	60	60	
PERFORMANCE :				
CFM STANDARD AIR	540	715	315	
TEMP. DIFFERENCE, IN/OUT, DEG.F	44	44	30	
SENSIBLE HEAT BTU/HR	25590	34120	10236	
DIRECTION OF AIR FLOW	VERTICAL DOWN	VERTICAL DOWN	VERTICAL DOWN	
RESISTANCE , IN. W.G.				
REQUIRED THROW, FT.				
WER :				
KW	7.5	10	3	
VOLTS, PHASE, HZ	480 / 3 / 60	480 / 3 / 60	480 / 3 / 60	
CONSTRUCTION :				
SIZE (H X W X D), INCHES	18 1/2 X 14 X 11 1/2	18 1/2 X 14 X 11 1/2	18 1/2 X 14 X 11 1/2	
CASING MATERIAL	STEEL	STEEL	STEEL	
MOTOR :				
HORSEPOWER	1 / 25	1 / 15	1 / 50	
VOLTS, PHASE, HZ	277 / 1 / 60	277 / 1/ 60	277 / 1 / 60	
ENCLOSURE				
ACCESSORIES :				
THERMOSTAT (BUILT-IN) *	YES	YES	YES	
MOUNTING , MINIMUM *	4, 1/2" THREATED ROD	4, 1/2" THREATED ROD	4, 1/2" THREADED ROD	
DIFFUSER *	YES	YES	YES	
HIGH TEMP. CUT-OUT *	YES	YES	YES	

REMARKS : SELECT MANUFACTURER AS INDICATED ABOVE OR EQUAL

* TO BE SUPPLIED BY VENDOR.

Attachment A

9212413035 8

THIS PAGE INTENTIONALLY
LEFT BLANK

FIELD INSPECTION AND CHECKOUT CHECKLIST

Equipment Number_____ Purchase Order No._____

Location_____

Installed by_____ Mfr._____

Specification No._____ Rev.___ Dwg. No._____ Rev.___

NOTES:
1) This checklist covers the general requirements for the inspection and testing of equipment for startup. It should be used in conjunction with the manufacturer's installation, testing and operating instructions.
2) All test equipment and instrumentation shall be properly calibrated per manufacturer's instructions. Items out of calibration or damaged shall not be used for testing.
3) Record all defects, missing parts, etc., and action taken to correct.

Items to Inspect/Check/Test	Installation Meets Requirements Signature	Recorded Data Remarks

(Inspection/check/test procedures to be detailed in this section. Items should be listed in the order to be accomplished.)

PROCEDURE SELLER_____ DATE_____

APPROVAL BUYER_____ DATE_____

TEST COMPLETION SELLER_____ DATE_____

ACKNOWLEDGEMENT BUYER_____ DATE_____

THIS PAGE INTENTIONALLY
LEFT BLANK

SECTION 13411
FIELD ERECTED WELDED STEEL STORAGE TANK
(SAFETY CLASS 3, RATED FOR SAFETY CLASS 1 DBE)

PART 1 GENERAL

1.1 SUMMARY

This section covers the minimum requirements for design, fabrication, inspection and testing of the following field assembled cylindrical welded steel storage tank.

EQUIPMENT NUMBER	EQUIPMENT NAME
TK-500-001	Fire and Process Water Storage Tank

1.2 REFERENCES

The publications listed below form a part of this specification to the extent referenced. The publications are referred to in the text by the basic designation only.

AMERICAN PETROLEUM INSTITUTE (API)

API STD 650	1988 Welded Steel Tanks for Oil Storage
API STD 2000	1982 Gauge for Venting Atmospheric and Low Pressure Storage Tanks

AMERICAN WATER WORKS ASSOCIATION (AWWA)

AWWA Standard D100	1984 Welded Steel Tanks for Water Storage

CODE OF FEDERAL REGULATIONS (OSHA)

OSHA Title 29, Chapter XVII, PART 1910 - Occupational Safety and Health Standards

NATIONAL FIRE PROTECTION ASSOCIATION (NFPA)

NFPA 22	1989 Standard for Water Tanks for Private Fire Protection

STEEL STRUCTURES PAINTING COUNCIL (SSPC)

SSPC SP-5	1989 White Metal Blasting
SSPC SP-6	1989 Commercial Blast Cleaning

1.3 **RELATED REQUIREMENTS**

Specification Section 05061	Welding Tanks
Specification Section 15250	Mechanical Insulation
Specification Section 17801	Mechanical Site Utilities Instrumentation

1.4 **SUBMITTALS**

Submit the following in accordance with the Vendor Drawing and Data Requirements section of the Order/Subcontract.

1.4.1 Shop Drawings

A. Dimensional details with applicable tolerances.

B. Detailed bill of materials.

C. Pipe connections nozzles and openings, internal parts, access openings, and attachments shall be identified identically as shown on Contract Drawings for each items.

D. The general arrangement, assembly or outline drawing shall show the following additional information.

1) The design and manufacturing code with year of issue.

2) Reference to supplementary standards and specifications.

3) Design and operating pressures and temperatures.

4) Test requirements.

5) Details of all weld preparations, and the location of all circumferential and longitudinal weld seams.

6) Cleaning, surface preparation, coating and marking requirements.

7) Nozzle schedule giving the time or mark number, quantity, size, rating, facing and the orientation and elevation.

8) Total fabricated weight of tank, in pounds.

9) Net and gross capacities.

10) Foundation requirements.

a. Base plate details

b. Weights (empty, operating and test)

c. Earthquake base shear and overturning moment (empty and operating condition)

11) C. G. of tank.

E. Details for parts shall show the following additional information:

1) Materials of construction including nominal and finished minimum thicknesses.

2) Details of all weld joint preparations, applicable weld procedure number, and NDE requirements.

3) Details of all attachment welds for nozzles, openings and appurtenances.

1.4.2 Design Calculations

Seller shall be responsible for the complete design of the tank and shall submit calculations stamped by a Professional Engineer registered by the State of Washington that demonstrate the adequacy of the design to resist the design loadings specified in Paragraph 2.1.3 and design conditions specified on the Contract Drawings. A minimum wall thickness is specified on the Contract Drawings.

1.4.3 Foundation Survey

Seller shall submit results of foundation survey as specified in Paragraph 3.3.1.

PART 2 PRODUCTS

2.1 MATERIALS AND/OR EQUIPMENT

2.1.1 Equipment

2.1.1.1 Tanks shall be furnished complete as shown on the Contract Drawings, and as herein noted, and shall include all necessary bolts, nuts, gaskets and all internals and internal piping.

2.1.1.2 Tank shall be designed, constructed, inspected, tested and certified in accordance with AWWA D100/NFPA 22 for anchored ground supported flat bottom tanks as modified herein.

2.1.1.3 Tank shall be insulated per Specification Section 15250, Mechanical Insulation.

2.1.1.4 Tank gauge shall be furnished per Specification Section 17801, Mechanical Site Utilities Instrumentation

2.1.2 Materials

2.1.2.1 All materials for tanks shall be in accordance with the requirements of NFPA 22 and AWWA D100.

2.1.2.2 Materials of construction for tank parts shall be selected to produce an economical design for the specified service conditions unless specified otherwise.

2.1.2.3 Certified mill test reports (CMTRs) shall be supplied on all plates to be used in the construction of the tank. Plates not having CMTRs certificates will not be acceptable.

2.1.3 Design Loadings

2.1.3.1 The tank shell thickness shall be designed for liquid level (both operating and test condition) to be at the top of tank shell. Specific gravity shall be as specified on the Contract Drawing.

2.1.3.2 Corrosion allowance of 1/16 inch shall be added to calculated shell and self-supporting roof thicknesses; to minimum nominal thicknesses of bottom; to nozzles and manholes; and to all exposed surfaces of internal non-removable appurtenances.

2.1.3.3 Shell nozzle connections shall be in accordance with the Contract Drawing and shall be API STD 650 regular type.

2.1.3.4 Tanks shall be checked for intermediate wind girder requirements using the actual shell thickness less specified corrosion allowances.

2.1.3.5 Vents shall be sized in accordance with API STD 2000 unless otherwise specified.

2.1.3.6 Earthquake loads shall be in accordance with AWWA D100 Section 13.4, using the following criteria:

A. Using local seismic data (see Attachment A). Scaling down of site specific response spectra is not acceptable.

B. Seismic design of roof is required.

C. Consider pressure stability.

D. Allowable stresses may be increase by 1.33, but shall not exceed 90 percent of yield.

In addition, the tank design shall be checked for its capacities to resist a total seismic load equal to .125 times the total weight of the vessel and its contents in accordance with the fixed percentage method as described in AWWA D100 Section 3.

2.1.4 Surface Preparation, Priming and Coating

2.1.4.1 Surface Preparation

A. Exterior surface of tank shall be cleaned by blast cleaning in accordance with SSPC-SP-6. Oil and grease shall be removed and welds shall be free of slag, flux and other contaminants.

B. Interior surface of tank shall have all edges rounded to a minimum of 1/8 inch radius. All internal welds shall be sealwelded, ground smooth and free of surface porosity, pockets and high spots. All weld splatter shall be removed. Any additional surface preparation required by manufacturer's standard shall be performed.

2.1.4.2 Priming and Coating

A. Blast cleaned external surfaces of tank shell and roof shall be primed with one (1) coat of Ameron's Dimetcote 9 or approved equal applied to a dry film thickness of 2.5 mils per manufacturer's standard.

B. Blast cleaned internal surfaces of tank shell and roof shall be lined with four (4) coats of Amercoat 33 or approved equal with 1.5 mils dry film thickness per coat for a total dry film thickness of 6.0 mils per manufacturer's standard.

PART 3 EXECUTION

3.1 PREPARATION

Foundation or pad on which the tank will be erected shall be examined to ensure that:

A. Foundation is the required size for tank.

B. Foundation tolerance are in accordance with NFPA 22.

C. Anchor bolts are undamaged and have the required number, projection and orientation.

3.2 **INSTALLATION, APPLICATION AND ERECTION**

3.2.1 Tank shall be erected per Section 10 of AWWA D100.

3.2.2 Vertical weld seam in bottom shell course shall be at least 12 inches away from bottom annular ring radial weld seams.

3.2.3 All temporary erection attachment welded to the interior or exterior of the shell or to the bottom shall be removed by arc gouging and/or flame cutting to a maximum of 1/8 inch from shell plate and weld area ground smooth.

3.2.4 Vertical weld seam shall be located to avoid openings wherever possible. Seller shall comply with all minimum weld clearance requirements of AWWA D100.

3.2.5 Tank nozzles shall be installed within the following tolerances:

A. Projection from outside of tank shell to extreme face of flange - ±3/16" (±1/2" for manholes).

B. Elevation or radial location - ±1/4" (±1/2" for manholes).

C. Flange tilt in any plane, measured on a diameter across the gasket surface - ±1/2° but not to exceed 3/16" (±1/2" for manholes).

3.2.6 Tanks shall be welded in accordance with Specification Section 05061, Welding Tanks.

3.3 **FIELD QUALITY CONTROL**

3.3.1 Surveys

3.3.1.1 Upon completion of welding of the first course shell plates and prior to erection of the second course, a survey of levelness, circularity and plumbness shall be performed by the Seller. Measurements shall be taken adjacent to and midpoint between each vertical weld seam. The locations shall be clearly marked and identified with reference numbers, and shall be used for any subsequent surveys as well as the final survey.

3.3.1.2 During the course of tank erection, additional surveys shall be performed as deemed necessary by the Seller.

3.3.1.3 A final survey shall be performed by the Seller after all roof framing has been installed. Result shall be submitted to the Buyer after each survey has been completed.

3.3.2 Inspections

Tank shall be inspected in accordance with the requirements of AWWA D100. The Seller shall prepare and provide certified check sheets which shall be submitted to the buyer as a record when the requirements of this specification have been successfully accomplished or fulfilled.

3.3.3 Testing

3.3.3.1 Tanks shall be tested in accordance with AWWA D100 and the additional requirements of this specification.

3.3.3.2 Tank shell shall be tested by filling with water, the filling level shall be 2 inches above the top leg of the top angle. The water fill level shall be held for a minimum of two hours, during which the weld seams shall be frequently visually inspected for leakage. Water temperature shall not be less than 60°F.

3.3.3.3 Tanks showing evidence of leakage from the bottom during tests must be emptied immediately. The source of leakage must be determined and the defect repaired prior to refilling. Weld repairs, if any, shall be performed in accordance with the approved weld repair procedure.

END OF SECTION

THIS PAGE INTENTIONALLY
LEFT BLANK

ATTACHMENT A

DBE RESPONSE SPECTRA FOR SAFETY CLASS 1 ITEMS

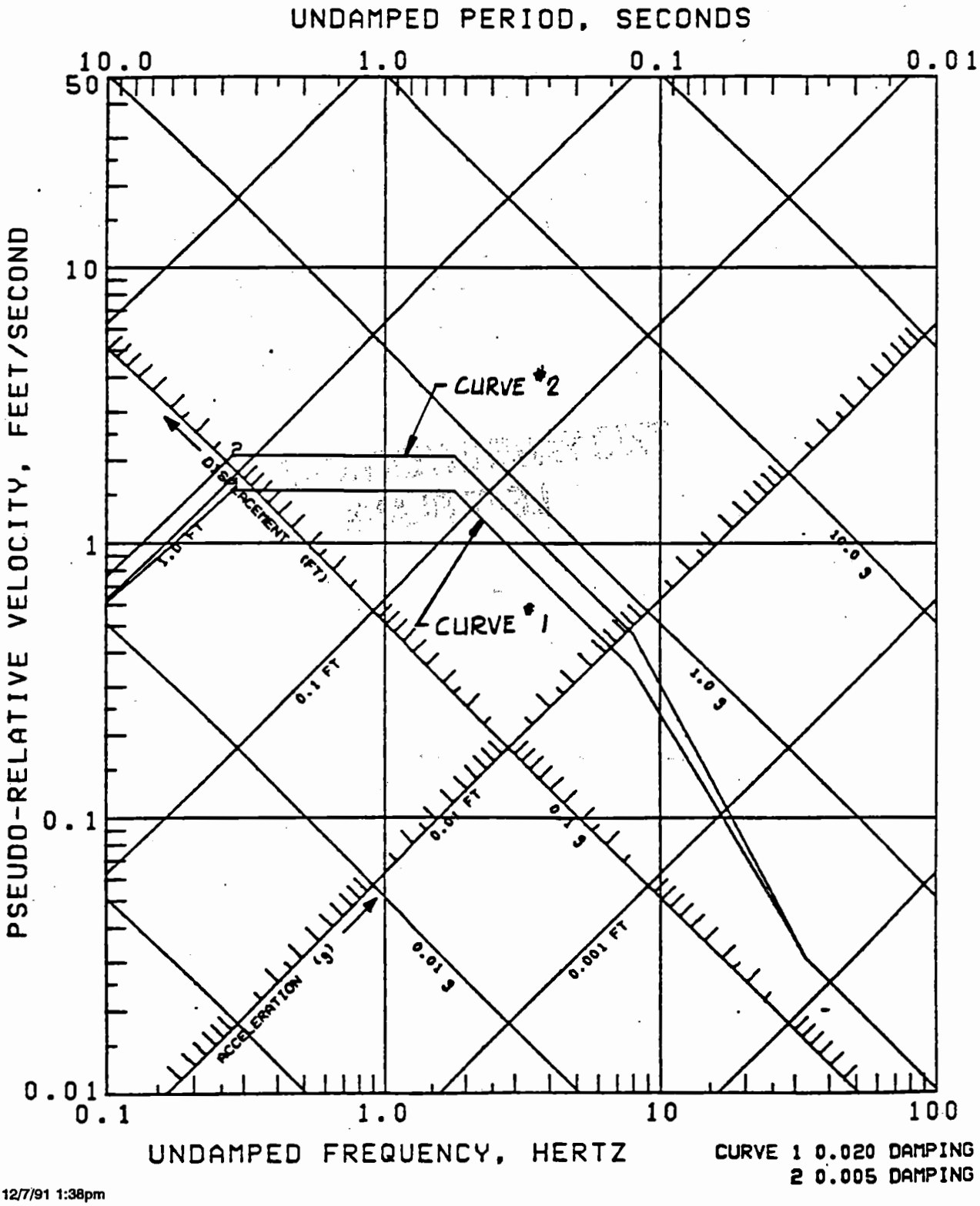

9 2 1 2 4 1 3 0 3 6 7

THIS PAGE INTENTIONALLY
LEFT BLANK

SECTION 15061
PIPING MATERIAL, FABRICATION, ERECTION AND PRESSURE TESTING (CARBON STEEL, IRON AND NONMETALLIC) (SAFETY CLASS 3)

PART 1 GENERAL

1.1 SUMMARY

This specification covers the requirements for the purchasing, fabrication, installation, erection, testing and cleaning of carbon steel, iron, and nonmetallic piping materials.

1.2 REFERENCES

The publications listed below form a part of this specification to the extent referenced. The publications are referred to in the text by the basic designation only.

AMERICAN PETROLEUM INSTITUTE (API)

API Standard 590	1985 Steel Line Blanks
API Standard 598	1990 Valve Inspection and Test
API Standard 600	1991 Steel Gate Valves, Flanged and Buttwelding Ends
API Standard 602	1985 Compact Steel Gate Valves

AMERICAN NATIONAL STANDARDS INSTITUTE (ANSI)
AMERICAN SOCIETY OF MECHANICAL ENGINEERS (ASME)

ANSI/ASME B1.20.1	1983 Pipe Threads General Purpose (Inch)
ASME/ANSI B16.1	1989 Cast Iron Pipe Flanges and Flanged Fittings, Class 25, 125, 250 and 800
ASME/ANSI B16.5	1988 Pipe Flanges and Flanged Fittings
ASME/ANSI B16.9	1986 Factory-Made Wrought Steel Buttwelding Fittings
ANSI B16.11	1980 Forged Steel Fittings Socketwelding and Threaded
ANSI B16.21	1978 Nonmetallic Gaskets for Pipe Flanges
ASME/ANSI B16.34	1988 Valves - Flanged and Buttwelding End

9 2 1 2 4 1 3 0 3 6 8

ASME B31.1	1989 Power Piping, Including Addenda a
ASME B31.3	1990 Chemical Plant and Petroleum Refinery Piping, Including Addenda a and b
ASME/ANSI B36.10M	1985 Welded and Seamless Wrought Steel Pipe

AMERICAN SOCIETY FOR TESTING AND MATERIALS (ASTM)

ASTM A 36/A 36M	1990 Standard Specification for Structural Steel
ASTM A 53	1990 Standard Specification for Pipe, Steel, Black and Hot-Dipped, Zinc-Coated Welded and Seamless
ASTM A 105/A 105M	1990 Standard Specification for Forgings, Carbon Steel, for Piping Components
ASTM A 106	1990 Standard Specification for Seamless Carbon Steel Pipe for High Temperature Service
ASTM A 126	1984 Standard Specification for Gray Iron Castings for Valves, Flanges, and Pipe Fittings
ASTM A 193/A 193M	1990 Standard Specification for Alloy Steel and Stainless Steel Bolting Material for High-Temperature Service
ASTM A 194/A 194M	1990 Standard Specification for Carbon and Alloy Steel Nuts for Bolts for High-Pressure and High-Temperature Service
ASTM A 216/A 216M	1989 Standard Specification for Steel Castings, Carbon, Suitable for Fusion Welding, for High-Temperature Service
ASTM A 234/A 234M	1990 Standard Specification for Piping Fittings of Wrought Carbon Steel and Alloy Steel for Moderate and Elevated Temperatures
ASTM A 307	1990 Standard Specification for Carbon Steel Bolts and Studs, 60,000 psi Tensile Strength

ASTM A 395	1988 Standard Specification for Ferritic Ductile Iron Pressure-Retaining Castings for Use at Elevated Temperatures
ASTM A 536	1984 Standard Specification for Ductile Iron Castings
ASTM A 563	1991 Standard Specification for Carbon and Alloy Steel Nuts
ASTM 8 61	1990 Standard Specification for Steam or Valve Bronze Castings
ASTM 8 62	1990 Standard Specification for Composition Bronze or Ounce Metal Castings
ASTM B 148	1990 Standard Specification for Aluminum - Bronze Sand Castings
ASTM B 584	1990 Standard Specification for Copper Alloy Sand Castings for General Applications
ASTM D 2774	1972 Standard Specification for Underground Installation of Thermoplastic Pressure Piping
ASTM D 3035	1989 Standard Specification for Polyethylene (PE) Plastic Pipe (SDR-PR) Based on Controlled Outside Diameter
ASTM D 3261	1990 Standard Specification for Butt Heat Fusion Polyethylene (PE) Plastic Fittings for Polyethylene (PE) Plastic Pipe and Tubing

AMERICAN WATER WORKS ASSOCIATION (AWWA)

AWWA C105	1988 Polyethylene Encasement for Ductile-Iron Piping for Water and Other Liquids
AWWA C209	1990 Cold-Applied Tape Coatings for the Exterior of Special Sections, Connections, and Fittings for Steel Water Pipelines
AWWA C214	1989 Tape Coating System for the Exterior of Steel Water Pipelines

9212413037 0

AWWA C216	1989 Heat-Shrinkable Cross-Linked Polyolefin Coatings for the Exterior of Special Sections, Connections, and Fittings for Steel Water Pipelines
AWWA C504	1987 Standard for Rubber-Seated Butterfly Valves
AWWA C506	1978 (R 1983) Standard for Backflow Prevention Devices - Reduced Pressure Principal and Double Check Valve types
AWWA C651	1986 Standard for Disinfecting Water Mains, Including Addendum, January 1990

FEDERAL SPECIFICATIONS (FED SPEC)

FED SPEC TT-E-489H	August 22, 1988 Enamel, Alkyd, Gloss, Low VOC Content
FED SPEC TT-P-645B	March 12, 1990 Primer, paint, Zinc-Molybdate, Alkyd Type

FACTORY MUTUAL (FM)

FM 1610	June 1978 Plastic Pipe and Fittings for Underground Fire Protection Service
Loss Prevention Data 3-10	March 1981 Installation and Maintenance of Private Fire Service Mains and Their Appurtenances

MANUFACTURER'S STANDARDIZATION SOCIETY OF THE VALVE AND FITTINGS INDUSTRY (MSS)

MSS SP-80	1987 Bronze Gate, Globe, Angle and Check Valves
MSS SP-85	1985 Cast Iron Globe and Angle Valves Flanged and Threaded Ends

NATIONAL ASSOCIATION OF CORROSION ENGINEERS (NACE)

NACE RP02-74	1974 High Voltage Electrical Inspection of Pipeline Coatings Prior to Installation

NATIONAL FIRE PROTECTION ASSOCIATION (NFPA)

NFPA 24	1987 Standard for Installation of Private Service Fire Mains and Their Appurtenances
NFPA 1963	1985 Standard for Screw Threads and Gaskets for Fire Hose Connections

PIPE FABRICATION INSTITUTE (PFI)

PFI ES-3	1990 Fabrication Tolerances
PFI ES-32	1988 Tool Calibration

STEEL STRUCTURES PAINTING COUNCIL (SSPC)

SSPC-SP 6	1989 Surface Preparation Specification No. 6 Commercial Blast Cleaning
SSPC-SP 10	1989 Surface Preparation Specification No. 10 Near-White Blast Cleaning

UNDERWRITER'S LABORATORIES (UL)

UL 246	January 14, 1987 Hydrants for Fire-Protection Service
UL 262	March 21, 1991 Gate Valves for Fire-Protection Service
UL 312	May 1, 1991 Check Valves for Fire-Protection Service
UL 405	July 10, 1980 Fire Department Connections
UL 1091	1986 Butterfly Valves for Fire- Protection Service
UL 1726	September 19, 1988 Automatic Drain Valves for Standpipe Systems

1.3 RELATED REQUIREMENTS

This specification is to be used in conjunction with the following specifications:

Specification Section 01730	Operation and Maintenance Data
Specification Section 03300	Concrete Construction (Safety Class 3, Rated for Safety Class 1 DBE)

Specification Section 05120	Structural Steel (Safety Class 3, Rated for Safety Class 1 DBE)
Specification Section 05062	Welding Piping
Specification Section 15250	Mechanical Insulation

1.4 **DEFINITIONS**

The term "erection," where used in this specification, shall be defined as follows: Shop or field fabricated erection - the placing of any pipe or component of a piping or instrument system in its final position specified in the drawings and/or specifications.

1.5 **SYSTEM DESCRIPTION**

All components, fabrication, erection, and testing, except as otherwise qualified herein, shall be in accordance with the requirements of ASME B31.1 for steam, condensate, clean drain, process water, and sanitary water systems; NFPA 24 for firewater systems; and ASME B31.3 for all other systems.

1.6 **SUBMITTALS**

Submit the following in accordance with the Vendor Drawing and Data Requirements section of the Order/Subcontract.

1.6.1 Product Data

Submit catalog cuts for valves, valve limit switches and strainers, or other data published by the manufacturer, to demonstrate conformance to the specification requirements, Catalog figure numbers alone will not be acceptable.

1.6.2 Shop Drawings

A. Submit shop drawings of nonstandard components per Paragraph 2.1.3A.

B. Submit Certified Dimensional Drawings with bill of material for flanged strainers and bolted bonnet valves.

9212413037 3

1.6.3 Quality Control Submittals

A. Test Reports

B. Submit valve pressure test reports per Paragraph 2.1.3C.

C. Submit flange bolting procedure per Paragraph 3.1.1E.

D. Submit Pressure Test Reports per Paragraph 3.2.6.

E. Submit cleaning reports per Paragraph 3.3.4.

F. Submit test procedure per Paragraph 3.2.1G.

1.6.4 Certificates

Certificates of Conformance for all pressure containing and/or wetted parts.

1.6.5 Manufacturer's Instructions, covering handling, installation, storage and maintenance in accordance with Specification Section 01730, Operation and Maintenance Data.

PART 2 PRODUCTS

2.1 **MATERIALS AND EQUIPMENT**

2.1.1 Service Symbols and Material Classes

A. Service symbols, Piping Material Classes as listed herein conform to service designations as shown on the drawings.

B. Unless otherwise specified, all pressures and temperatures listed in the Piping Material Classes are design conditions.

C. Piping Material Classes/Services Index

CLASS	MATERIAL	RATING CLASS	SERVICE
G	Carbon Steel	150 FF	DRX - Clean Drain IAX - Instrument Air FWX - Fire Water LPW - Process Water RWX - Raw Water SWX - Sanitary Water
R	Nonmetallic	See Line Class	DRX - Clean Drain LPW - Process Water SWX - Sanitary Water
RF	Non-Metallic Pipe	See Line Class	FWX - Firewater RWX - Raw Water
S	Carbon Steel	300 RF	HPS - High Pressure Steam

D. Identification of Piping

Example:

HPS- 1/2" -16A-006- S - IH
XXX-XXXXXX-XXX-XX-XXX-XXXX

- Insulation or Heat Tracing Symbol
- Piping Material Class
- Line Number
- System/Subsystem
- Nominal Pipe Size
- Pipe Line Service

9212143037

E. Line Classes

Piping Material Class G

General Material:	Carbon Steel/Bronze/Cast Iron
Rating:	Class 125
Temperature Limit:	-20°F thru 200°F
Maximum Pressure:	Per ANSI B16.1
Corrosion Allowance:	.065"
Construction:	2" and smaller - Screwed/Socketweld 3" and larger - Buttweld/Flanged

VALVES	DESCRIPTION
Gate Valves	
1/2" - 2"	175 psig CWP, threaded, bronze body and trim, UL labelled as conforming to UL 262. Kennedy 66 or equal. (Use for fire-water service, see Note 1)
6" - 12"	Class 125 flat face flanged, OS&Y, cast iron, UL labelled as conforming to UL 262. Kennedy 68 or equal. (Use for fire-water service)
3" - 20"	Class 125 flat face flanged, OS&Y, cast iron, ASTM A 126, Class B, bronze trim, ASTM B 62, carbon steel bonnet bolting, ASTM A 307, Grade B with ASTM A 563, Grade A nuts. Stockham G-623 or equal.
Globe Valves	
1/2"- 2"	Class 150 threaded, bronze body, ASTM B 62, Alloy 836, screwed bonnet, bronze trim, conforming to MSS SP-80, Type 3. Crane 14-1/2P or equal.
3" - 8"	Class 125 flat face flanged, cast iron body, ASTM A 126, Class B, bronze trim. Conforming to MSS SP-85, Type I. Crane 351 or equal.

9 2 1 2 4 1 3 0 3 7 6

Piping Material Class G (Continued)

VALVES	DESCRIPTION
Butterfly Valves (See Note 3)	
2" - 12"	Lug type, 150 psig CWP, ductile iron body ASTM A 395, nickel plated carbon steel disc, stainless steel shaft, Buna-N or equal seats, lever operated thru 10" size, handwheel gear operated 12" size. Demco NE-C or equal.
2" - 12"	Lug type, 175 psig CWP, ductile iron, ASTM A 536 or ASTM A 395, handwheel gear operated, UL labelled as conforming to UL 1091. NIBCO LD3510-4 or equal. (Use for firewater service)
Ball Valves	
1/2" - 2"	600 psig WOG threaded, bronze body, ASTM B 584 Alloy C84400 chrome plated brass ball, brass stem, reinforced TFE or equal seats, lever operated. Apollo 70/100 or equal. (See Note 2)
Check Valves	
1/2 - 2"	Class 200 threaded, swing type, screwed bonnet, bronze body, ASTM B 61, Alloy 922, bronze trim, conforming to MSS SP-80, Type 3. Crane 36 or equal.
2"	Class 125/250 wafer type, cast iron, Factory Mutual (FM) approved for firewater service and so labelled. Milwaukee 1402 or equal. (Use for firewater service)
2-1/2" - 3"	Class 125 flat face flanged, swing type, cast iron, ASTM A 126, Class B, UL labelled as conforming to UL 312. Stockham G-939 or equal. (Use for firewater service)
3" - 20"	Class 125 split disc wafer type, cast iron body ASTM A 126, class B, aluminum bronze disc ASTM B 148, alloy 952, Buna-N seals, 316 SS pin and spring. Marlin 12HMP or equal.
4" - 12"	Class 125 wafer type, cast iron, ASTM A 126, class B, aluminum bronze disc ASTM B 148, alloy 952, Buna-N seals. UL labelled as conforming to UL 312. Marlin U12HMP or equal. (Use for firewater service)

Piping Material Class G (Continued)

ITEM	DESCRIPTION
Pipe	
1/2" - 2"	Welded carbon steel, schedule 80, ASTM A 53, Grade B, plain ends.
3" - 20"	Welded carbon steel, standard weight, ASTM A 53, Grade B, beveled ends.
Fittings (ells, tees, caps, couplings, unions, plugs, and reducers)	
1/2" - 2"	Class 3000 socketweld carbon steel, ASTM A 105/A 105M or ASTM A 234/A 234M Gr. WPB.
3" - 24"	Carbon steel, ASTM A 234/A 234M, Grade WPB, buttweld type, std. wt.
Self Reinforced Branch Connections	
1/2" - 2"	Class 3000 carbon steel, ASTM A 105/A 105M, threaded, Bonney Forge Thred-o-let or equal.
1/2" - 2"	Class 3000 carbon steel, ASTM A 105/A 105M, socketweld, Bonney Forge Sock-o-let or equal.
3" - 6"	Carbon steel, ASTM A 105/A 105M, std. wt., buttweld, Bonney Forge Weld-o-let or equal.
Branch Construction	
	Header sizes 1/2" thru 2", use tees.
	Header sizes 3" and larger, use reducing tees within the size range of ASME/ANSI B16.9, use self reinforced branch connections on other sizes.

9 2 1 2 4 1 3 0 3 7 8

Piping Material Class G (Continued)

ITEM	DESCRIPTION
Flanges	
1/2" - 2"	Class 150 flat face socketweld type, carbon steel ASTM A 105/ A 105M, schedule 80 bore
1/2" - 20"	Class 150 flat face blind flange, carbon steel ASTM A 105/ A 105M.
3" - 20"	Class 150 flat face weld neck type, carbon steel ASTM A 105/ A 105M, standard weight bore.
Orifice Flanges	
3" - 20"	Class 300 raised face weld neck type, with socketweld taps and jack screws, carbon steel ASTM A 105/A 105M, standard weight bore.
Swages	
1/2" - 2"	Concentric swage, carbon steel ASTM A 234/A 234M Gr. WPB, schedule 80, threaded small end x beveled large end.
1/2" - 2"	Concentric swage, carbon steel ASTM A 234/A 234M Gr. WPB, schedule 80, threaded large end x beveled small end.
1/2" - 2"	Concentric swage, carbon steel ASTM A 234/A 234M Gr. WPB, schedule 80, beveled both ends.
1/2" - 2"	Eccentric swage, carbon steel ASTM A 234/A 234M Gr. WPB, schedule 80, threaded large end x beveled small end.
Gaskets	
1/2" - 20"	Class 150 full face type, red rubber 1/8" thick, ANSI B16.21. Sepco No. 20 or equal.
3" - 20"	Class 300 ring type, red rubber 1/8" thick, ANSI B16.21. Sepco or equal. (Use only at orifice flanges)
Bolting	
	Machine bolt, heavy hex head, ASTM A 307 gr. B, with one semi finished heavy hex nut, ASTM A 563, Grade A.
	Cap screw, heavy hex head, ASTM A 307, grade B. (Use at lug type butterfly valves)

9 2 1 2 4 1 3 0 3 7 9

Piping Material Class G (Continued)

Strainers

1/2" - 2"	Class 150 wye type, threaded ends, bronze body, ASTM B 62, 304 or 316 stainless steel screen with .033" perforations, with blowoff connection with round head screwed plug. Mueller 351 or equal.
2" - 20"	Conical strainer to fit between Class 150 RF/FF flanges, 150% minimum open area, 14 gauge mild steel plate. Mack Iron PCS or equal. (Use as temporary pump suction strainers)
2"- 16"	Class 150 flat face flanged, duplex type, rated @ 285 psig, flanged cover, carbon steel, ASTM A 216/A 216M, grade WCB, 304 or 316 SS screens with .033" perforations, lever operated internal valve to allow removal of either basket while operating. Mueller 692 or equal.

Blinds

1-1/2" - 20"	Class 150 raised face/flat face spectacle blind, carbon steel. Mack Iron or equal.

Backflow Preventers

2" - 3"	Class 125 flat face flanged, double check valve type, conforming to AWWA C506, consisting of two check valves and two cast iron gate valves, Class 125 flat face flanged, UL labelled as conforming to UL 312. Clayton Model D or equal.
4"	Class 125 flat face flanged, double check valve type conforming to AWWA C506. Not to include gate valves. Ames 3000 DCDA or equal. Gate valves shall steel, class 150, flanged with the raised face removed, OS&Y, manufactured to comply with STD. UL 262. Crane No. 47 or equal.
10"	Class 125 flat face flanged, double check valve type, conforming to AWWA C506, consisting of two check valves and two cast iron gate valves, Class 125 flat face flanged. Ames 2000 DCA or equal.

Piping Material Class G (Continued)

ITEM	DESCRIPTION
Pumper Connection	
4" - 6"	Exterior exposed type, double clapper, straightway pattern, all brass, siamese pumper inlet assembly UL labeled as conforming to UL 405, with two 2 1/2" NFPA 1963 swivel female national standard hose thread inlet connections, one 4" or 6" (size as specified on the drawings) female tapered pipe thread outlet connection, branded "STANDPIPE," two chained plugs, and one 4" or 6" (size as specified on the drawings) Sch. 80 x 6" long pipe nipple (threaded one end x beveled for welding on the other end) made from welded ASTM A 53 Grade B pipe. Potter-Roemer 5720/5941 (with special nipple) or equal.
Thread Compounds	
	For pipe joints - Liquid-O-Ring or equal.
	For flange bolts - Commercial anti-seize compound, Never-Seez Regular Grade or equal.

NOTES:

1. Use also for instrumentation connection root valves in firewater service.

2. Use also for instrument connection root valves except in firewater service.

3. Gaskets are not required at flanged joints against butterfly valves where butterfly valve lining extends over face of valve.

Piping Material Class R

General Material:	Nonmetallic
Temperature Limit:	120°F
Maximum Pressure:	125 Psig
Corrosion Allowance:	None
Construction:	All Sizes Butt Fusion/Flanged

VALVES	DESCRIPTION
Butterfly (See Note 3)	
2" - 3"	200 psig CWP, wafer type, cast iron body ASTM A 126, Class B, aluminum bronze disc, Buna-N or equal seats, lever operated, with enclosed rigid extension stem. Stockham LG-512 or equal. (See Note 1)
4" - 12"	Class 150 flat face flanged, cast iron conforming to AWWA C504, locking lever operated to 8", gear operated 10" and above. Keystone 504 (with enclosed rigid extension stem) or equal. (See Note 1)

ITEM	DESCRIPTION
Pipe	
3/4" - 12"	Seamless Polyethylene (PE) conforming to ASTM D 3035, SDR 11, PE 3408. Rated for 160 psig @ 73°F. To be joined by butt fusion connections. Phillips Driscopipe 8600 or equal.
Fittings (ells, tees, caps, reducers, and flange adapters)	
3/4" - 12"	Seamless molded Polyethylene (PE) conforming to ASTM D 3261, PE 3408, SDR 9.3 or 11. Rated for 160 psig @ 73°F. To be joined by butt fusion connections. Phillips Driscopipe 8600 or equal. (see note 2)
8" -12"	Class 150, carbon steel, ASTM A 105/A 105M or ASTM A 234/A 234M, Grade WPB, split tee, Progressive Metals, Inc., or equal. Design conditions 125 psig and 100°F. (See Note 4)

Branch Construction

Use reducing tees within the manufacturer's size range. Use reducing tees and reducers where not within the manufacturer's size range.

Piping Material Class R (Continued)

ITEM	DESCRIPTION
Flanges	
3/4" - 12"	Class 150 back-up type, convoluted design, ductile iron ASTM A 536 grade 60/40/12 to 60/40/18, to mate with ASME/ANSI B16.1 flanges. Improved Piping Products or equal. (Use as back-up flange with polyethylene Flange Adapter).
3/4" - 12"	Class 150 flat face blind flange, carbon steel ASTM A 105/A 105M.
Gaskets	
3/4" - 12"	Class 150 ring type, red rubber, 1/8" thick. Sepco No. 20 or equal.
Bolting	
	Machine bolt, galvanized, heavy hex head, ASTM A 307 gr. B, with one galvanized heavy hex nut. ASTM A 563, Grade A.
Thread Compound	
	For flange bolts - Commercial anti-seize compound, Never-Seez Regular Grade or equal.

NOTES:

1. The height of valve extension stems for each location, shall be determined by the Seller based on actual jobsite valve bury depths.

2. Fabricated fittings rated for 160 psig or greater @ 73°F, and made from PE 3408 pipe are acceptable substitutes where seamless molded fittings are not available due to size and/or type of fitting.

3. Gaskets are not required at flanged joints against butterfly valves where butterfly valve lining extends over face of valve.

4. For use in hot tapping to existing sanitary water lines. Information on existing line is not available, but is assumed to be carbon steel. Seller shall confirm and adjust the type of tapping fitting accordingly.

Piping Material Class RF

General Material:	Nonmetallic
Temperature Limit:	100°F
Maximum Pressure:	150 Psig
Corrosion Allowance:	None
Construction:	All Sizes Butt Fusion/Flanged Thrust Blocked (See Note 5)

VALVES	DESCRIPTION
Gate Valves	
4" - 12"	Class 125 flat face flanged, cast iron, UL labelled as conforming to UL 262, with UL labelled adjustable indicator posts. Kennedy 701X (with indicator post) or equal. (See Note 1)

ITEM	DESCRIPTION
Pipe	
4" - 12"	Seamless Polyethylene (PE) conforming to ASTM D 3035, PE 3408. Rated for 200 psig @ 73°F. To be joined by butt fusion connections. FM approved as conforming to FM 1610, and so labelled. Plexco PE-3408 class 200 or equal. (See Note 4)
Fittings (ells, tees, caps, reducers, and flange adapters)	
4" - 12"	Polyethylene (PE) conforming to ASTM D 3261, PE 3408, Rated for 200 psig @ 73°F. To be joined by butt fusion connections. FM approved as conforming to FM 1610, and so labelled. Plexco PE-3408 class 200 or equal. (See Note 4)
Branch Construction	
	Use reducing tees within the manufacturer's size range. Use reducing tees and reducers where not within the manufacturer's size range.
Flanges	
4" - 12"	Class 150 lap joint type, carbon steel ASTM A 105/A 105M.
4" - 12"	Class 150 flat face blind flange, carbon steel ASTM A 105/A 105M.

Piping Material Class RF (Continued)

ITEM	DESCRIPTION
Gaskets	
4" - 12"	Class 150 ring type, red rubber 1/8" thick. Sepco No. 20 or equal.
Bolting	
	Machine bolt, galvanized, heavy hex head, ASTM A 307 gr. B, with one galvanized heavy hex nut, ASTM A 563, Grade A.
Fire Hydrants	
	Dry barrel type, UL labelled as conforming to UL 246, 6" Class 125 flat face flanged inlet, with two 2 1/2" hose connections, one 4 1/2" pumper connection, all with NFPA 1963 national standard hose threads, all capped with chain attached caps. Standard 1-1/2" point to flat pentagon operating nuts, rotating counter clockwise to open. Furnish each hydrant with operating wrench. Paint one coat primer to FED SPEC TT-P-645B, and two coats finish red enamel to FED SPEC TT-E-489H. Clow Medallion or equal. (See Notes 2 and 3)
Thread Compound	
	For flange bolts - Commercial anti-seize compound, Never-Seez Regular Grade or equal.

9 2 1 2 4 1 3 0 3 9 5

Piping Material Class RF (Continued)

NOTES:

1. The height of valve indicator posts and extension stems for each location, shall be determined by the Seller based on actual jobsite valve bury depths.

2. The lower barrel height of fire hydrants for each location shall be determined by the Seller based on actual jobsite fire hydrant bury depths.

3. The top or head of the fire hydrants shall be painted with green enamel and a sign reading RAW WATER - DO NOT DRINK shall be mounted on the hydrants.

4. Where FM approved (for example, odd size reducing tees) fittings are not available due to size and/or type of component, the material and pressure rating shall be the same as specified herein (excluding FM approval) with the additional requirement that the Standard Dimension Ratio shall not be greater than SDR 9. The Buyer shall provide certification from the fitting manufacturer that the fitting has passed all FM testing requirements for a class 200 component.

5. Thrust blocks shall be placed as shown on Contract Drawings. Blocks shall conform to Specification Section 03300, Concrete Construction.

9 2 1 2 4 1 0 3 8 6

Piping Material Class S

General Material:	Carbon Steel
Rating:	Class 300
Temperature Limit:	-20°F thru 410°F
Maximum Pressure:	250 PSIG
Corrosion Allowance:	.065"
Construction:	2" and smaller - Socketweld 3" and larger - Buttweld/Flanged

VALVES	DESCRIPTION
Gate Valves	
1/2" - 2"	Class 800 Socketweld, ASTM A 105/A 105M, API 600 #1 trim, seal welded bonnet, OS&Y, solid wedge, renewable seats, Grafoil or equal bonnet gasket, non-asbestos packing, Garlock 127 AFP or equal. Vogt SW2801 or equal.
1/2" - 2"	Class 800 Socketweld x scrd, ASTM A 105/A 105M, API 600 #1 trim, seal welded bonnet, OS&Y, solid wedge, integral seats, Grafoil or equal bonnet gasket, non-asbestos packing, Garlock 127 AFP or equal. Vogt TSW2801 or equal (use for drains, vents, and blow-off connections only).
3" - 14"	Class 300 raised face flanged, OS&Y, flexible wedge, bolted bonnet, castings to ASTM A 216/A 216M Gr. WCB, forgings to ASTM A 105/A 105M, API 600 #1 trim, Grafoil or equal bonnet gasket, non-asbestos packing, Garlock 127 AFP or equal. Stockham 30-OF, Walworth 5206 or equal.
Globe Valves	
1/2" - 2"	Class 800 Socketweld, ASTM A 105/A 105M, API 600 #1 trim, seal welded bonnet, OS&Y, plug type disc, integral seats, Grafoil or equal bonnet gasket, non-asbestos packing, Garlock 127 AFP or equal. Vogt SW2821 or equal.
3" - 14"	Class 300 raised face flanged, OS&Y, bolted bonnet, castings to ASTM A 216/A 216M Gr. WCB, forgings to ASTM A 105/A 105M, API 600 #1 trim, Grafoil or equal bonnet gasket, non-asbestos packing, Garlock 127 AFP or equal. Stockham 30-GPF, Walworth 5281 or equal.

Piping Material Class S (Continued)

ITEM	DESCRIPTION
Pipe	
1/2" - 2"	Seamless carbon steel, schedule 80, ASTM A 106, Grade B, plain ends.
3" - 14"	Seamless carbon steel, standard weight, ASTM A 106, Grade B, beveled ends.
Fittings (ells, tees, caps, couplings, unions, plugs, and reducers)	
1/2" - 2"	Class 3000 socketweld carbon steel, ASTM A 105/A 105M or ASTM A 234/A 234M Gr. WPB.
3" - 14"	Carbon steel, ASTM A 234/A 234M, Grade WPB, buttweld type, std. wt.
8" x 4"	Class 300, carbon steel, ASTM A 105/A 105M or ASTM A 234/A 234M, Grade WPB, reducing split tee, Progressive Metals, Inc., or equal. Design conditions 250 psig and 410°F. (See Note 1)
Self Reinforced Branch Connections	
1/2" - 2"	Class 3000 carbon steel, ASTM A 105/A 105M, threaded, Bonney Forge Thred-o-let or equal.
1/2" - 2"	Class 3000 carbon steel, ASTM A 105/A 105M, socketweld, Bonney Forge Sock-o-let or equal.
3" - 6"	Carbon steel, ASTM A 105/A 105M, std. wt., buttweld, Bonney Forge Weld-o-let or equal.
Branch Construction	
	Header sizes 1/2" thru 2", use tees.
	Header sizes 3" and larger, use reducing tees within the size range of ASME/ANSI B16.9, use self reinforced branch connections on other sizes.

9 2 1 2 4 1 5 0 3 9 8

Piping Material Class S (Continued)

ITEM	DESCRIPTION
Flanges	
1/2" - 2"	Class 300 raised face socketweld type, carbon steel ASTM A 105/A 105M, schedule 80 bore.
3" - 14"	Class 300 raised face weld neck type, carbon steel ASTM A 105/A 105M, standard weight bore.
1/2" - 14"	Class 300 raised face blind flange, ASTM A 105/A 105M.
Orifice Flanges	
3" - 14"	Class 300 raised face weld neck type, carbon steel ASTM A 105/A 105M, with socketweld taps and jackscrew, standard weight bore.
Swages	
1/2" - 2"	Concentric swage, carbon steel ASTM A 234/A 234M, Gr. WPB, schedule 80, threaded small end x beveled large end.
1/2" - 2"	Concentric swage, carbon steel ASTM A 234/A 234M Gr. WPB, schedule 80, beveled both ends.
Gaskets	
1/2" - 12"	Class 300, 304 stainless steel spiral wound with Grafoil or approved equal filler, with 304 SS centering guide. Flexitallic CG or equal.
Bolting	
	Alloy stud bolt, ASTM A 193/A 193M grade B7 with two heavy hex nuts, ASTM A 194/A 194M grade 2H.
Strainers	
1/2" - 2"	Wye strainer, Class 600 socketweld ends, bolted cap, carbon steel body castings to ASTM A 216/A 216M, Grade WCB, or forgings to ASTM A 105/A 105M, with 304 or 316 SS screen and .033" perforations, socketweld connection for blow-off valve. Mueller 862-BC (modified) or equal.

Piping Material Class S (Continued)

Thread Compounds

For pipe joints - Liquid-O-Ring or equal.

For flange bolts - Commercial anti-seize compound, Never-Seez Regular Grade or equal.

NOTES:

1. For use in tapping a branch connection in existing high pressure steam line.

0 6 3 0 3 1 4 2 1 2 6

2.1.2 Field Pressure Testing Materials

A. Test Water Requirements

Water shall be potable grade.

B. Pneumatic Air Requirements

The air for pneumatic testing shall have a dewpoint of -20°F or less at atmospheric pressure and shall contain less than 10 ppm oil.

C. Leak Detector Solution

Leak detector solution for pneumatic testing shall be Nupro "Snoop" or equal.

D. Pressure Test Blinds

Plain 1/4" thick carbon steel test blanks made from ASTM A 36/A 36M plate with 1/16 inch thick non-asbestos gaskets shall be used for blanking raised face flanges for sizes up to 6 inch NPS.

E. Vents, Drains, and Plugs

Vent and drain connections shall be Class 3000 self reinforced threaded branch connections, Bonney Forge "Thred-o-let" or equal. Material shall be ASTM A 105/ A 105M for all carbon steel material classes. Plugs shall be round head screwed type threaded per ANSI/ASME B1.20.1, of the same material as the vent or drain connections.

F. Pressure Test Plugs

Open ends of piping systems (i.e., plain end or beveled end) that cannot otherwise be blanked off for pressure testing shall be closed off with commercial pressure test plugs suitable for the pipe size and test pressure.

2.1.3 Components

General

The requirements contained in this Section shall apply to all Material Classes included in this specification.

A. Pipe, fittings, flanges, and other piping components (i.e., valves, strainers, gaskets, bolting, etc.) shall be standard components conforming to the material

9 2 1 2 4 1 3 0 3 9 1

specifications and standards listed in ASME B31.1, Appendix F for steam, condensate, clean drain, process water, and sanitary water systems; NFPA 24 for firewater systems; and ASME B31.3, Appendix E for all other systems, within the size ranges of those codes. Where such conformance is not possible (i.e., fittings smaller than 1/2 inch NPS, manufacturer's proprietary valve design, etc.), the Seller shall submit a dimensional drawing of the component, and the component shall be certified by the manufacturer as being suitable for the design conditions of the applicable material class. The Seller shall adjust field dimensions if the materials procured do not correspond to the dimensions depicted on the drawings.

B. All steel flanged end valves shall conform to ASME/ANSI B16.34.

C. All steel flanged, and socketweld end valves shall be pressure tested per API 598. Certification of passing the API 598 required tests shall be submitted to the Buyer for each valve. All gate and globe valves shall have a backseat bushing that allows the valve to be repacked under pressure.

All other valves shall be pressure tested by the manufacturer in accordance with the national standard or code governing the valve design.

D. Steel Flanges shall conform to ASME/ANSI B16.5.

E. Fittings shall conform to ANSI B16.11 (for steel socketweld fittings and threaded fittings), and ASME/ANSI B16.9 (for steel buttweld fittings). Threaded ends of pipe shall conform to ANSI/ASME B1.20.1.

F. The lengths of cap screws for bolting in lug type butterfly valves, and thru-bolts for bolting in wafer type valves shown on the drawings, shall be verified by the Seller to be the correct lengths for the actual valves purchased.

G. Nonmetallic components or parts (i.e. gaskets, stem packing, seals, etc.) shall not contain asbestos.

H. The interior surfaces of all carbon steel pipe, for use in the following services, shall be provided with a minimum surface cleanliness equal to SSPC-SP 10, near white metal.

Service Symbol	Service
IAX	Instrument Air

Immediately after cleaning, all interior pipe surfaces shall be protected from corrosion by applying Cortec VCI 609 powder, per manufacturer's recommendations. Pipe ends shall be sealed with plastic end caps and taped in place to prevent moisture ingress.

I. All aboveground random length steel pipe and miscellaneous steel supports shipped direct to the jobsite shall be procured with the following exterior coating:

Surface preparation - SSPC-SP 6

Primer - Inorganic zinc primer, Amercoat Dimetcote 9 or equal. 2.5 mils minimum dry film thickness.

The pipe shall be masked from painting on the ends for a distance of 5" to 7" from the ends. The masking shall be removed prior to shipment to the jobsite.

J. ASTM A 106, Grade B pipe may be substituted for ASTM A 53 pipe.

K. Permanent blinds shall conform to API 590.

2.1.4 See Attachment C for special piping components that are not specified in the Piping Material Classes. SP numbers are located on the mechanical and civil drawings.

2.1.5 Cathodic Protection

Furnish cathodic protection materials in accordance with the requirements shown in Attachment B.

2.2 FABRICATION

2.2.1 Shop Assembly

A. Welding

Welding, weld examination, and postweld heat treatment for metallic piping shall be in accordance with Specification Section 05062. Bonding and welding for nonmetallic piping shall be in accordance with ASME B31.3.

9 2 1 2 4 1 3 0 3 9 3

The welding process for making full penetration welds in the air systems listed in paragraph 2.1.3H shall include a gas tungsten arc weld (GTAW) root pass.

B. Internal Misalignment

Where the ends of piping components are to be joined by welding and the internal surface misalignment exceeds the dimensional limits of the qualified welding procedure, one of the following procedures shall be used to correct this condition.

1) Taper bore or grind the wall of the component extending internally using a 4 to 1 maximum taper. Such tapering shall not result in a finished wall thickness, before welding, that is less than the nominal pipe wall thickness minus the manufacturer's mill tolerance. Further reduction of the wall thickness requires Buyer's authorization.

2) Use spreaders or internal and/or external lineup clamps to correct moderate out-of-round condition.

C. Flanges and Fittings

1) Flange bolt holes are to be oriented as follows, unless otherwise indicated on the drawings.

   a. Flange face vertical - bolt holes to straddle vertical centerline.

   b. Flange face horizontal - bolt holes to straddle the normal piping layout grid lines.

2) All welded slip-on flanges shall be double welded.

3) Orifice flanges shall be fabricated with the taps in the exact orientation shown on the drawings. The sections of pipe to which the orifice flanges are attached may be standard mill run pipe, but shall be choice selected pieces and shall be round, smooth, and free from blisters and scale. The interior of the pipe, at welds, shall be ground smooth. Field welds shall be kept at a maximum distance back from the face of the orifice.

D. Any deviations in dimensions, flange ratings, etc., from the drawings shall be submitted to the Buyer in writing, for approval, prior to fabrication of the affected piping.

9212410394

E. Dimensions on the piping drawings are in inches when dimensions are less than 1'-0". Feet and inches are shown when dimensions are 1'-0" and more.

F. Dimensions are to the centerline of pipe, bottom of pipe, and the contact face of flanges.

G. Where cold spring (CS) or prespring (PS) is required, the piping drawings have been adjusted to accommodate this. The piping shall be fabricated to the dimensions shown.

H. Reducers are concentric unless otherwise noted on the drawings.

2.2.2 Fabrication Dimensional Tolerances

Piping fabrication tolerances shall be in accordance with Pipe Fabrication Institute ES-3.

2.3 **PACKAGING AND SHIPPING**

2.3.1 Preparation for shipment shall conform to the manufacturer's standard, and as a minimum shall provide protection against corrosion and damage from normal handling and storage.

2.3.2 Minimum preparation shall include the following:

A. Flange faces shall be protected with a wood, metal or plastic flange protector (minimum 1/8" thick). A non-metallic gasket shall be furnished and placed between the flanges and the protector when a metallic or wood flange protector is used.

B. All pipe ends shall be protected by means of a plastic or metallic plug or cap.

C. Valves shall be prepared for shipment in such a manner to avoid damage or atmospheric corrosion to the inside or outside surface, or parts, during storage or while in transit. Gate and globe valves shall be shipped in the closed position and ball valves shall be shipped in the open position. Use API 600 as a minimum standard of acceptance.

PART 3 EXECUTION

3.1 INSTALLATION, APPLICATION AND ERECTION

3.1.1 Field Fabrication, Installation and Erection

A. All field fabrication, installation and erection shall conform to the requirements of Paragraph 2.2, titled "Fabrication."

B. All piping and tubing shall be routed in accordance with the Piping Drawings.

C. Coordinates and elevations are used extensively on the Piping Drawings. The Seller shall establish the required fabrication dimensions.

D. Elevations are designated as follows:

Nonsloped lines - "Bottom of Pipe" (BOP EL ___)
"Centerline Elevation" (℄ EL.____)
"Beveled End Elevation" (BE EL. ___)
"Plain End Elevation" (PE EL. ____)

Sloped lines - "Centerline Work Point Elevation" (℄ .W.P. EL ___)
"Invert Elevation" (I.E. EL ___)

E. All flange bolts shall be lubricated with anti-seize compound of the appropriate piping material class before tightening. Bolt torque procedures shall be in accordance with the gasket manufacturer's recommendations. Care shall be exercised when making up bolted connections to cast iron valves and equipment, especially in the underground plastic piping systems when bolting stub ends with back-up flanges to cast iron valves. Misalignment shall not be corrected by pulling up cocked flanged joints. The Seller shall submit gasket manufacturer's suggested bolt torque procedures, including recommended torques and alignment procedures.

F. Piping shall be examined before and after erection to ensure that all foreign matter has been removed from the interior surfaces of the piping.

G. The Seller shall be responsible for the proper horizontal and vertical alignment of the piping as shown on the drawings. The Seller shall install unions as required to maintain orientation as shown on the drawings of valves, instrument connections, etc. at threaded connections.

9 2 1 2 4 1 3 0 3 9 6

H. Shimming is permissible to maintain contact with pipe supports. Shims shall conform to Section 0520, and shall be welded to pipe supports with continuous fillet welds along each side of the shim along the longitudinal axis of the pipe. Shim minimum dimensions shall be:

For pipe without shoes:

Width along diametral axis of the pipe - 1/3 nominal pipe size

Length along longitudinal axis of pipe - Width of support

For pipe with shoes:

Width along diametral axis of the pipe - Width of shoe

Length along longitudinal axis of pipe - Width of support

I. Installation of nonmetallic piping shall conform to the recommendations of ASTM D 2774. Installation of underground fire water mains shall conform to the recommendations of FM Data sheet 3-10.

J. Seller shall protect polyethylene piping from overheating due to sunlight as required during installation.

K. Metallic risers from underground lines that penetrate concrete slabs, and/or foundations shall be installed so that the riser is not in direct contact with reinforcing bars. Cathodic insulation sleeves shall be installed on the riser where pipe (including pipe coating) contacts the reinforcing steel or other metal.

L. Metallic risers from underground lines shall be installed with a cathodically insulated flanged joint located at a minimum distance from the point of exit. See the applicable system in Attachment C for the insulation kit requirements. The flange bolts (or studs) shall be one size smaller diameter than the standard diameter to allow for ease of assembly with the insulation kit bolt sleeves.

M. The Seller shall provide the necessary materials and install locking devices (with padlock and two keys) for valves that are noted on the P&ID drawings to be L.O. (locked open) or L.C. (locked close). All locks shall be common keyed for a given size valve.

9 2 1 2 4 1 3 0 3 9 7

N. Installation of cathodic protection for metallic underground lines shall be in accordance with Attachment B.

O. Plastic marking tape (Griffolyn Company, Terra Tape or equal) shall be placed in trench backfill directly above pipelines approximately 12 inches below grade. The marking tape shall be 6 inches wide, yellow colored plastic without printing. Where the distance between the outside lines of multiple pipelines laid in the same trench exceeds three feet, two strips of marking tape shall be placed in the backfill, one over each of the outside lines.

P. Fitting make-up is not dimensioned on the drawings.

Q. Circumferential welds on piping shall be located a minimum of 6 inches from pipe supports.

R. Minimum backfill cover for underground lines shall be as follows:

1) All underground lines except at railroad (RR) crossings, shall have at least a 42 inch cover over the top of the pipe.

2) Sanitary water (SWX) lines at RR crossings, shall have at least 72 inches of cover from the bottom of the RR ties to the top of the pipe.

3) Firewater (FWX) lines at the RR crossings, shall have at least 60 inches of cover from the bottom of RR ties to the top of the pipe.

3.1.2 Coatings for Metallic Underground Piping

A. All carbon steel piping in underground service shall be protected from exterior corrosion by use of a cold applied tape wrap system. Materials, surface preparation, application and inspection requirements shall be in accordance with AWWA C209 and C214. Carbon steel lap joint flanges shall be protected per AWWA C216.

B. All cast iron valves, hydrants, flanges, and ductile iron flanges in underground service shall be protected from exterior corrosion by encasing with polyethylene film. Materials, polyethylene film thickness and type, installation, securing and inspection requirements shall be in accordance with AWWA C105. Polyethylene film shall extend over valve flanges onto mating plastic pipe, and up the valve stem or hydrant barrel to approximately 6" above grade.

3.2 FIELD QUALITY CONTROL

3.2.1 Pressure Tests

A. The minimum test pressure is the lowest allowable test pressure gauge reading (the calculated test pressure plus the additional pressure resulting from the static head of the test fluid above the test gauge).

B. The maximum test pressure shall be the greater of:

1) times (1.1x) the minimum test pressure

2) 20 psi greater than the minimum test pressure.

C. Prior to initial operation, all installed piping shall be tested except where otherwise qualified by this specification.

D. Piping that is to be purged after installation shall be tested and all repairs made prior to purging.

E. The Buyer's Representative shall be given two working days prior notification of the time and date of any testing to be performed.

F. The Seller shall be responsible for installing vents and drains required for testing purposes. All vents and drains installed for the purpose of testing, flushing, or purging shall be plugged after test completion.

G. The Seller shall prepare and submit a hydrostatic and pneumatic test procedure, including test diagrams, and test report format for Buyer approval.

3.2.2 Pressure Testing of Piping

A. All pressure testing shall be per ASME B31.1 for steam, condensate, clean drain, process water, and sanitary water systems; NFPA 24 for firewater systems; and ASME B31.3 for all other systems.

B. The alternate initial service tests as allowed in ASME B31.1 shall not be utilized.

C. All piping systems shall be hydrostatically tested with the exception of the following systems, which shall be pneumatic tested.

Service Symbol	Service
IAX	Instrument Air

Note 1: Carbon steel shall not be pneumatic tested at material temperatures below 40°F.

3.2.3 Pressure Test of Vessels and Equipment

The pressure on any point in vessels or equipment included in the pressure test shall not be greater than the shop test pressure for that equipment as stated on the vessel drawing, Vendor's equipment drawing or specification sheets. In the event the piping test pressure is greater than the vessel or equipment test pressure, the piping shall be disconnected, blinded and tested separately. Pneumatic tests shall not be performed on vessels without procedures approved by the Buyer.

3.2.4 Status of Instruments During Pressure Test

A. All instruments shall be protected from damage when pressure testing piping systems. Attachment A outlines the status of instruments during testing to ensure protection.

B. Instruments not listed in Attachment A shall not be subjected to the pressure test unless authorization is obtained from the Buyer.

3.2.5 Pressure Test Preparation

A. Temporary test blinds shall be installed between flanges where necessary to isolate piping systems, vessels, and equipment. However, where permanent operational blinds are installed, they may be used for pressure testing. Temporary test blinds shall be removed after successful completion and acceptance of tests.

B. All joints, including welds, are to be left uninsulated and exposed for examination during the test. Joints may be insulated or coated once they have been previously tested in accordance with this specification.

C. Pressure test gauges shall be calibrated per PFI ES-32. The calibration shall be made using a dead weight tester with calibration records traceable to the National Institute of Standards and Technology. Gauge shall be

tagged with the dates of the last and next calibrations. The date of gauge calibration shall be recorded by the Seller.

D. The Seller shall take necessary precautions to prevent plastic piping from bowing in trenches as a result of expansion and/or internal pressure, during hydrotesting.

E. Carbon steel and nonmetallic line shall be isolated from alloy lines during test unless the water used contains less than thirty five (35) ppm chlorides.

F. The Seller shall furnish the pumps, gauges, measuring devices, temporary plug valves, and other miscellaneous equipment necessary for testing.

G. The test fluid media, pressure, minimum duration, and acceptance criteria shall be in accordance with the applicable code or standard referenced in Paragraph 3.2.2A. The following additional requirements shall be included:

1) The test pressure shall be applied and maintained for at least five minutes prior to start of minimum test duration to assure that the pressure has equalized.

2) Systems required to be pressure tested per ASME B31.1 or ASME B31.3 shall have the test pressure maintained for a time sufficient to examine all joints and connections for leakage, but in any case not less than ten minutes. The acceptance criteria is zero leakage for all (including NFPA 24) pressure tests.

3) If unacceptable leaks are found, then:

- their locations shall be marked
- the test pressure shall be gradually released
- the piping shall be drained
- appropriate repairs or replacement shall be made
- and the pressure testing shall be repeated until acceptable results have been achieved

H. All metallic lines shall be protected from freezing, and shall be drained in preparation for cold weather.

9212413040 1

3.2.6 Test Records

A. The Seller shall prepare and submit to the Buyer in accordance with Paragraph 1.6 test reports for all piping systems requiring tests. The test reports shall contain, as a minimum, the following data:

1) Job title and Contract Number

2) Date of test

3) Contract Drawing and line numbers identification of piping systems

4) Type of test, i.e., Hydrostatic, Pneumatic

5) Pressure applied, material temperature, and length of time at Test pressure

6) Test results

7) Test by

8) Signature of Seller Test Supervisor

9) Comments, if any

10) Gauge identification and dates of last and next calibration

11) Signature or stamp of the Buyer's Representative

3.2.7 System Component Acceptance Test

After completion of the Hydrostatic and Pneumatic tests and at such times as the Buyer may direct, an acceptance test shall be performed for approval and acceptance. The test shall be performed in the presence of the Buyer's representative and shall consist of the following:

All valves in the system shall be fully opened and then fully closed, to ensure proper operation of valve mechanism.

Firewater Systems are designed to withstand Safety Class 1 Design Basis Earthquake (DBE) conditions. Therefore, Seller shall develop and implement a plan to check and verify that all Firewater Systems (FWX) are erected and tested in accordance with this specification and the Contract Drawings. The plan shall address, but not be limited to anchor bolting, hangers, supports, guides, pipelines, and workmanship.

3.3 CLEANING

3.3.1 Cleaning After Hydrotesting (Metallic Piping)

A. After hydrostatic test, the following procedure shall be followed:

1) Water used in cleaning carbon steel and nonmetallic pipe shall be clean potable water.

2) Flushing velocity shall not exceed 10 fps but shall be a minimum of 4 fps.

3) Piping systems shall be flushed for a minimum of 10 minutes (continuous).

4) Visual examination of cleanliness shall be by visual examination of a clean white cloth used to filter the system discharge. Additional 10 minute flushes shall be performed until the visual examination reveals no visible debris collection on the cloth.

5) To ensure the absence of moisture after cleaning, lines shall be drained and blown dry with compressed air or nitrogen of the quality specified for pneumatic air per this Specification.

6) Immediately after cleaning, drying, and inspection, all non-flanged openings shall be tightly sealed with plastic caps to protect the bevel and pipe ends and to prevent the entry of moisture and foreign matter.

3.3.2 Cleaning After Pneumatic Testing

After pneumatic testing, piping shall be purged at a minimum velocity of ten feet per second until no foreign matter is seen exiting the pipe. Air quality shall be that specified for pressure testing.

3.3.3 Disinfection

All lines in potable water service (Service Code SWX) shall be disinfected in accordance with AWWA C651.

3.3.4 Cleaning Reports

All visual examinations, flushes, and purges shall be documented in a test report to be submitted to the Buyer.

END OF SECTION

9 2 1 2 4 1 3 0 4 0 3

ATTACHMENT A

STATUS OF INSTRUMENTS DURING PRESSURE TEST

	INSTRUMENTS	DISPOSITION NOTE NOS.
1.	Analyzers	1
2.	Control Valves, regulators and pressure balanced valves (except butterfly type)	2
3.	Control Valves - butterfly type	4,9
4.	Flow Instruments - D/P Cell and Bellows types	1
5.	Flow Instrument - Rotometers	2,5
6.	Flow Meters - in line positive displacement, coriolis, and magnetic types	2,10
7.	Pitot Tubes	2,11
8.	Flow switches - vane type	2
9.	Gauge Glasses	4,7
10.	Thermowells	4,6
11.	Level Inst. - D/P cell and Bellows types	1
12.	Level Switches - float type	2
13.	Orifice Plates and Restriction Orifices	2,12
14.	Pressure Gauges	1
15.	Pressure Instrument - all types	1
16.	Pressure Regulators	2
17.	Pressure Switches	1
18.	Pressure Safety Relief Valves - Other than 3/4" and 1" Screwed	3,8
19.	Pressure and Temperature Safety Relief Valves - 3/4" and 1" Screwed	2
20.	Bi-Metallic Dial Thermometers	13

THIS PAGE INTENTIONALLY
LEFT BLANK

DISPOSITION REFERENCE NOTES:

1. Block from pressure tests, and provide vents.

2. Remove from system prior to pressure testing.

3. Blind off from pressure tests.

4. Include in pressure tests.

5. The Seller shall remove rotometers from the line prior to the system pressure tests and reinstall the rotometers after the completion of the system pressure tests.

6. The Seller shall install thermowells in the lines prior to the system pressure test. Thermowells shall not be removed after the system pressure test.

7. The Seller shall install and pressure test in accordance with the manufacturer's recommended procedure.

8. Test gauge may be used if one is furnished.

9. Butterfly control valves shall be included in the pressure test. The valves shall be in the full open position for the entire testing period. Because of failure position or actuation direction, it may be necessary to apply an external force to the valve actuator in order to drive the valve to the "full" open position.

   For pneumatic operated valves, the Seller shall by means of a manual air pump, or any similar low pressure device, apply sufficient pressure to cause the valve to open fully. The valve position shall be maintained during the length of the test by blocking "in" the pressure applied to the valve diaphragm. The Seller shall not mechanically block the valve in an open position.

   For electric operated valves the Seller shall apply power in accordance with manufacturer's instructions for opening the valves to the "full" open position. The valve position shall be maintained during the length of the test. The Seller shall not mechanically block the valve in an open position.

10. The Seller shall remove flow meters from the line prior to the system pressure test and reinstall after the completion of the system pressure tests.

11. Pitot tubes shall be removed from the lines by the Seller before any flushing or cleaning operations are done and reinstalled after flushing or cleaning is completed.

12. Restriction orifices shall be removed from the lines by the Seller before any flushing or cleaning operations are done and reinstalled after flushing or cleaning is completed.

13. No testing. Only visual inspection.

All instruments shall be protected from damage due to freezing. In preparation for cold weather all instruments must be drained and process lead lines blown out with clean dry oil-free air or nitrogen.

9 2 1 2 4 1 3 0 4 0 5

THIS PAGE INTENTIONALLY
LEFT BLANK

ATTACHMENT B

CATHODIC PROTECTION DETAIL

Reference Line Numbers IAX-1"-410-001-G and IAX-1"-410-003-G:

THIS PAGE INTENTIONALLY LEFT BLANK

TEMPORARY CATHODIC PROTECTION DETAIL

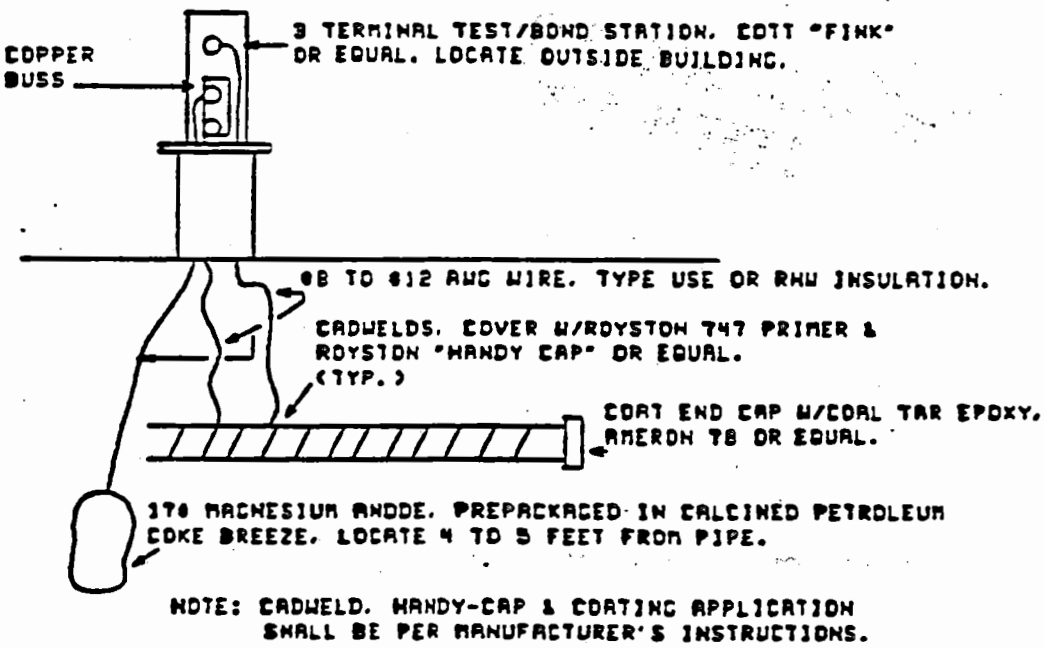

NOTE: CADWELD. HANDY-CAP & COATING APPLICATION SHALL BE PER MANUFACTURER'S INSTRUCTIONS.

9 2 1 2 4 1 3 0 4 0 6

THIS PAGE INTENTIONALLY
LEFT BLANK

ATTACHMENT C

PIPING SPECIALTY ITEM LIST

SYSTEM NO. 41
SHEET NO. 1 OF 1, REV. A
DATE 3/1/91, BY HLF

SP/
_/

THIS SYMBOL ON FLOW DIAGRAMS OR DRAWINGS DENOTES A PIPING SPECIALTY ITEM NOT OTHERWISE COVERED BY PIPING SPECIFICATIONS.

REV	SP NUMBER	SIZE	LINE NUMBER	DESCRIPTION
A	41001	1"	410-001 003	FLANGE INSULATION KIT, CL 150 FF/RF, CONSISTING OF ONE SET EACH FULL LENGTH PHENOLIC BOLT/STUD SLEEVES, PHENOLIC WASHERS, AND STEEL BACK-UP WASHERS. F.H. MALONEY OR EQUAL. NOTE: BOLTING ONE SIZE SMALLER DIAMETER THAN STANDARD IS ACCEPTABLE WHERE STANDARD BOLTING WILL NOT FIT DUE TO ALIGNMENT TOLERANCES.

9 2 1 2 4 1 3 0 4 0 7

THIS PAGE INTENTIONALLY
LEFT BLANK

ATTACHMENT C (Continued)

PIPING SPECIALTY ITEM LIST

SYSTEM NO. 50
SHEET NO. 1 OF 1, REV. A
DATE 3/1 /91, BY HLF

SP/
_/_____

THIS SYMBOL ON FLOW DIAGRAMS OR DRAWINGS DENOTES A PIPING SPECIALTY ITEM NOT OTHERWISE COVERED BY PIPING SPECIFICATIONS.

REV.	SP NUMBER	SIZE	LINE NUMBER	DESCRIPTION
A	50001	1"	500-031	AUTOMATIC BALL DRIP VALVE, BRONZE, THREADED, MPT INLET X FPT OUTLET, UL LABELLED AS CONFORMING TO UL 1726. GRINNELL 1687 OR EQUAL.
A	50002	10"	500-029	GATE VALVE CL 125 FLANGED, OS&Y. PARALLEL SEATS, CAST IRON BODY, BRONZE TRIM, UL LABELLED AS CONFORMING TO UL 262. PROVIDED WITH A LOCK-OPEN DEVICE (WITH PADLOCK AND TWO KEYS), AND A CLOSED POSITION INDICATOR SWITCH (NEMA 4, DPDT, 125V, 5A, POTTER OR EQUAL). VALVE AT PUMP PX-500-002A SHALL BE TAGGED "ZSL-500-234". VALVE AT PUMP PX-500-002B SHALL BE TAGGED "ZSL-500-216". TAGGING SHALL BE PER SPECIFICATION 17801 PARA.2.30. KENNEDY 68 OR EQUAL.
A	50003	10"	500-030	BUTTERFLY VALVE 175 PSI CWP, LUG TYPE,CAST IRON, HANDWHEEL GEAR OPERATED, UL LABELLED AS CONFORMING TO UL 1091. PROVIDED WITH A LOCK-OPEN DEVICE (WITH PADLOCK AND TWO KEYS), AND A CLOSED POSITION INDICATOR SWITCH (NEMA 4, DPDT, 125V, 5A). VALVE AT PUMP PX-500-002A SHALL BE TAGGED "ZSL-500-235". VALVE AT PUMP PX-500-002B SHALL BE TAGGED "ZSL-500-233". TAGGING SHALL BE PER SPECIFICATION 17801 PARA. 2.30. NIBCO LD3510-8/TS1 OR EQUAL.
A	50004	6" 8"	500-030 029	RUBBER EXPANSION JOINT WITH SINGLE UNFILLED ARCH, INTEGRAL FLANGE WITH RETAINER RINGS, CLASS 125 STANDARD DRILLING, AND 6" FACE TO FACE DIMENSION, WITH THREE (3) 3/4" TIE RODS FOR PRESSURE THRUST CONTROL. GENERAL RUBBER, STYLE 1075 OR EQUAL.

THIS PAGE INTENTIONALLY
LEFT BLANK

ATTACHMENT C

PIPING SPECIALTY ITEM LIST

SYSTEM NO. 53
SHEET NO. 1 OF 1, REV. A
DATE 3/1/91, BY HLF

SP/
_/_

THIS SYMBOL ON FLOW DIAGRAMS OR DRAWINGS DENOTES A PIPING SPECIALTY ITEM NOT OTHERWISE COVERED BY PIPING SPECIFICATIONS.

REV.	SP NUMBER	SIZE	LINE NUMBER	DESCRIPTION
A	53001	4"	530-130	WALL ANCHOR/SEAL SPOOL PER DRAWING BELOW, POLYETHYLENE (PE) EQUIVALENT TO ASTM D 3035, SDR 11, PE 3408, RATED FOR 160 PSIG AT 73°F. DRISCOPIPE OR EQUAL.

SP-53001 DETAIL DRAWING

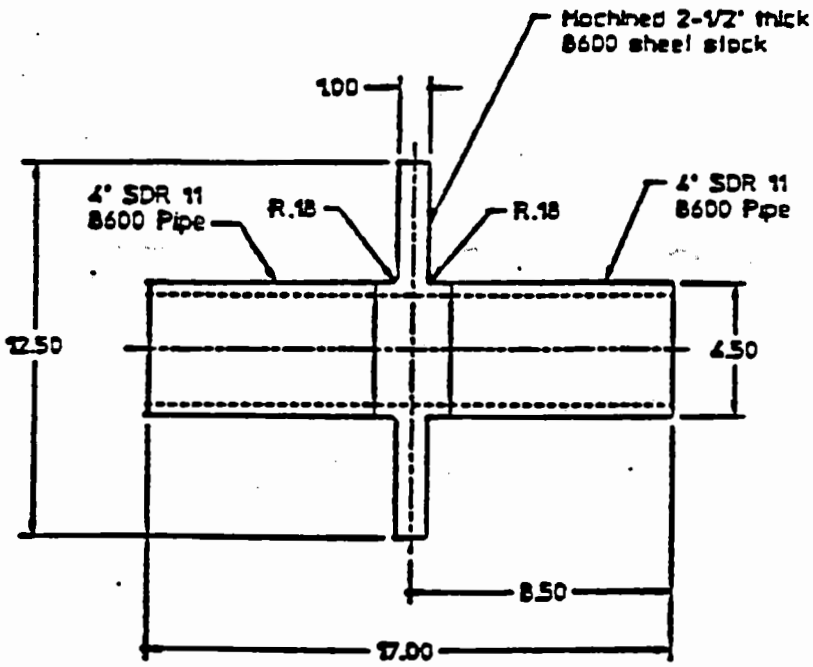

9 2 1 2 4 1 3 0 4 0 9

THIS PAGE INTENTIONALLY
LEFT BLANK

SECTION 15061A
DESIGN SPECIFICATION FOR
SAFETY RELATED CARBON STEEL VALVES
(SAFETY CLASS 1)

PART 1 GENERAL

1.1 SUMMARY

This specification defines the requirements for a safety related manually operated, 4 inch Class 300, carbon steel body and bonnet, gate valve briefly described and noted as Piping Specialty Item SP-42001 in Attachment A. The valve shall conform to ASME Boiler and Pressure Vessel Code, Section III, Division 1, Class 3.

1.2 REFERENCES

The publications listed below form a part of this specification to the extent referenced. The publications are referred to in the text by the basic designation only.

AMERICAN SOCIETY OF MECHANICAL ENGINEERS (ASME/ANSI)

ASME Boiler and Pressure Vessel Code, 1989 Edition, with Addenda thru 1990:

Section II	Material Specifications Part A - Ferrous Materials
	Material Specifications Part C - Welding Rods, Electrodes, and Filler Metals
Section III	Rules for Construction of Nuclear Power Plant Components:
	Subsection NCA, General Requirements for Division 1 and Division 2
	Division 1, Subsection ND - Class 3
Section V	Nondestructive Examination
Section IX	Qualification Standard for Welding and Brazing Procedures, Welders, Brazers, and Welding and Brazing Operators

9 2 1 2 4 1 3 0 4 1 0

ASME SA-182/SA-182M	1989 Specification for Forged or Rolled Alloy Steel Pipe Flanges, Forged Fittings, and Valves and Parts for High-Temperature Service
ASME SA-194/SA-194M	1989 Specification for Carbon and Alloy Steel Nuts for Bolts for High Pressure and High Temperature Service
ASME SA-217/SA-217M	1989 Specification for Steel Castings, Martensitic Stainless and Alloy, for Pressure Containing Parts Suitable for High-Temperature Service
ASME SA-320/SA-320M	1989 Specification for Alloy Steel Bolting Materials for Low Temperature Service
ASME SA-350/SA-350M	1989 Specification for Forgings, Carbon and Low-Alloy Steel, Requiring Notch Toughness Testing for Piping Components
ASME SA-352/SA-352M	1989 Specification for Steel Castings, Ferritic and Martensitic, for Pressure Containing Parts, Suitable for Low Temperature Service
ASME SFA5.13	1989 Specification for Solid Surfacing Welding Rods and Electrodes
ASME/ANSI B16.5	1988 Pipe Flanges and Flanged Fittings
ASME/ANSI B16.10	1986 Face-To-Face and End-To-End Dimensions of Valves
ASME/ANSI B16.34	1988 Valves - Flanged and Buttwelding End

1.3 **RELATED REQUIREMENTS**

Specification Section 01730 Operation and Maintenance Data

1.4 **DEFINITIONS**

1.4.1 Wherever the word "Code" is used it shall be understood to mean the ASME Boiler and Pressure Vessel Code, Section III, Division 1, Subsections NCA and ND, 1989 Edition, with Addenda through 1990.

1.4.2 The pressure containing parts of the valve shall be defined as the body, bonnet, wedge (or gate, or disc), and body to bonnet bolting.

9212413041 1

1.4.3 Trim shall consist of the stem, body seat surface, gate seat surface, bushing, or a deposited weld for backseat and stemhole guide, small internal parts that normally contact the service fluid, excluding the pin used in making a stem-to-gate connection. (This pin shall be of austenitic stainless steel material.)

1.4.4 FABRICATION as the title of Paragraph 2.2 shall be defined to include foundry, manufacturing, examination, testing, cleaning, painting, and quality assurance practices, operations, and performances.

1.5 **SYSTEM DESCRIPTION**

The valve will be installed in a steam system.

1.6 **SUBMITTALS**

Submit the following in accordance with the Vendor Drawing and Data Requirements section of the Order/Subcontract.

1.6.1 Product Data

Submit catalogue cuts for the valve or other data published by the manufacturer, to demonstrate conformance to the specification requirements. Catalog figure numbers alone will not be acceptable.

1.6.2 Certified Dimensional Drawings

Submit certified dimensional drawing of valve including cross section, outline dimensions, itemized bill of material with ASME and ASTM specifications, Purchase Order number, and Fluor Daniel "SP" number.

1.6.3 Quality Control Submittals

A. Reports

1) Certified Design Report per Paragraph 2.1.4N.

2) Certified Impact Test Reports as required by the material specification per Paragraph 2.1.5A and B, and 2.2.4.

3) Certified Postweld Heat Treatment Reports per Paragraph 2.2.3.

4) Certified Nondestructive Examination (NDE) Reports per Paragraph 2.2.5.

9212413041 2

5) Certified Wall Thickness Measurement Report per Paragraph 2.2.6.

6) Certified Hydrostatic Test Report per Paragraph 2.2.7.

B. Valve manufacturer's Quality Assurance Manual per Paragraph 2.2.1.

C. Welding and Welding Repair Procedure Specifications, and Procedure Qualification Records per Paragraph 2.2.2.

D. Weld maps per Paragraph 2.2.2.

E. Certified Mill Test Reports (CMTR) for all pressure containing parts.

F. Certificate of Compliance to the material specifications for all non-pressure containing wetted parts.

G. Certificate of Conformance to the requirements of the Purchase Order and Attachments thereto.

1.6.4 Manufacturer's Instructions, covering handling, installation, storage and maintenance in accordance with Specification Section 01730, Operation and Maintenance Data.

1.7 **PROJECT OR SITE ENVIRONMENTAL CONDITIONS**

The valve will be installed outside under the following normal environmental conditions:

A.	Climate	- Arid to Semi-arid
B.	Temperature	- (-)27° to 115°F.
C.	Average Annual Rainfall	- 6.25 inches
D.	Radiation	- Nil
E.	Operating Position	- Full open

PART 2 PRODUCTS

2.1 **MATERIALS AND/OR EQUIPMENT**

2.1.1 General

The valve materials and design shall be engineered (with the exception of normal maintenance for stem packing, gaskets and

lubricating materials) to be suitable for a minimum of 40 years service.

2.1.2 Code Requirements

Material selection, design, manufacturing, testing, and examination shall be in accordance with the ASME Boiler and Pressure Vessel Code, Section III, Division 1, Subsection NCA, and Subsection ND, Class 3 components.

2.1.3 Boundary and End Connections

The valve boundary to which piping is attached, shall be limited to the valve proper up to and including the valve end flanges.

2.1.4 Design

A. The gate valve shall be Class 300, raised face flanged, outside screw and yoke, bolted bonnet, flexible wedge design.

B. The valve shall conform to the requirements of ASME/ANSI B16.34.

C. The valve shall be designed for the following High Pressure Steam Conditions:

Design Pressure - 250 psig at

Design Temperature - -27°F/410°F

The following design conditions were obtained from operating personnel.

Boiler Control set at 220 psig

Superheater Relief Valve set at 240 psig

Main Steam Drum Relief Valve set at 250 psig

Steam leaves Power Plant 50°F above saturation

Design Flow Rate to Valve is 8450 lb/hr

D. The valve shall be considered to be supported in line only at the inlet and outlet ends, mounted with the valve stem in horizontal position.

E. The valve shall be designed to be operable without binding or galling when mounted in any position.

9212130414

F. The design stress intensities in the pressure containing parts shall not exceed the limits permitted by the Code.

G. The allowable stresses in the non-pressure containing parts shall be limited to 90 percent of the specified minimum yield strength in tension or compression, and to 50 percent of the specified minimum yield strength in shear.

H. The valve shall be capable of maintaining active operational integrity during and after the following Design Basis conditions:

1) Design Basis Wind (DBW) with a maximum velocity of 90 miles per hour (fastest-mile).

2) Design Basis Ashfall with the following criteria:

Thickness of ashfall	- 4.5 inches uncompacted	
	- 3 inches compacted	
Density of ash	- Dry, loose	72 pcf
	- Dry, compacted	96 pcf
	- Wet, compacted	101 pcf
Design ashfall loading:	- Dry, compacted	24 psf
	- Dry, uncompacted	27 psf

3) Design Basis Earthquake (DBE) with maximum seismic acceleration gravity loads of:

Gx = Gy = Gz = .54g

A Certified Design Report including a Seismic/Dynamic Analysis Report shall be submitted.

4) Loads and moments at piping end connections as given below:

	LOADS					
PIPING ACTIONS ON CONNECTION	FORCES (LBS.)			MOMENTS (FT-LBS.)		
	Fx	Fy	Fz	Mx	My	Mz
DEAD WEIGHT (OPER)	0	*	0	10	0	400
THERMAL MOVEMENT	75	0	0	0	10	0
SEISMIC (+/-)	220	90	90	0	80	80
WIND (+/-)	**		**	0	360	0

9 2 1 2 4 1 3 0 4 1 5

*Load to be calculated by Seller based on actual weight of valve.
**Load to be calculated by Seller based on Design Basis Wind and actual valve shape.

Axis definitions
- X positive - compressive force along longitudinal axis of valve
- X negative - tensile force along longitudinal axis of valve
- Y positive - vertical, pointing upward
- Y negative - vertical, pointing downward
- Z horizontal, perpendicular to longitudinal axis of valve

I. The valve shall be designed such that there are no natural frequencies less than 33 Hz. The valve manufacturer shall certify compliance with this requirement.

J. The valve face to face dimension shall conform to ASME/ANSI B16.10.

K. Welded-on flanges are not permitted.

L. The maximum allowable handwheel rim pull to fully seat and unseat the valve is 80 lbf at a differential pressure equivalent to the design pressure specified in Paragraph 2.1.4C. An enclosed gear operator shall be provided, if necessary, to meet the maximum rim pull requirement.

M. External exposed surfaces of the stem and other parts that may fail operation due to the Design Basis Ashfall shall have permanent protectors.

N. A Certified Design Report shall be submitted in accordance with Paragraph ND 3131 of the Code. The report shall document considerations given for the Design Basis requirements of Paragraphs 2.1.4H and 2.1.4I.

2.1.5 Material

A. Carbon steel body, bonnet, and wedge shall be castings to ASME SA-352/SA-352M, Grade LCB, or forgings to ASME SA-350/SA-350M, Grade LF2. Forgings are preferred over cast materials.

B. Body to bonnet bolting shall be bolts or studs to ASME SA-320/SA-320M, Grade L7 with nuts to ASME SA-194/SA-194M, Grade 4 or 7.

C. Trim shall be F6 and hardfaced (Stellite 6) seating surfaces. F6 trim shall conform to ASME SA-217/SA-217M Grade CA 15 (cast), or ASME SA-182/SA-182M, Grade F6a (forged). Minimum hardness of trim shall be HB 300. ASME Section II, Part C, SFA-5.13, Classification CoCr-A, or equivalent overlay, is an acceptable hardfacing substitute for Stellite 6. Valve shall have replaceable seat rings

and Seller shall supply any special tools required to lap seat rings.

D. Stem packing shall consist of graphitic braided top and bottom rings with die formed graphitic ribbon pack (Grafoil or equal) intermediate rings. All rings shall be impregnated with zinc dust (or equal) corrosion inhibitor.

E. Nonmetallic components or parts (i.e., gaskets, stem packing, seals, etc.) shall not contain asbestos.

F. Chain operator shall consist of a ductile iron sprocket with "hammer blow" attachment, chain guide, and 50 feet or galvanized steel chain. Seller to size operator for appropriate handwheel size. Babbit or equal.

2.2 FABRICATION

2.2.1 The valve shall be manufactured in accordance with a Quality System Program, and Quality Assurance Manual that meets the requirements of Paragraph ND-2600 of the Code. The valve manufacturer's Quality Assurance Manual shall be submitted.

2.2.2 All welding including seal welds, fillet welds, overlays, and inlays, shall be performed by welders in accordance with welding procedures, and welding procedure qualifications all conforming to the requirements of ASME Section IX. All Welding Procedure Specifications (WPS), and Procedure Qualification Records (PQR) shall be submitted.

Repair welds are not permitted on castings and forgings.

2.2.3 Preheating prior to welding and Postweld Heat Treatment shall conform to the requirements of Paragraph ND-4600 of the Code. Certified Postweld Heat Treatment Reports (including heat cycle charts) shall be submitted.

2.2.4 Impact testing (Charpy "V" notch) shall be in accordance with the material specifications. Testing method and performance shall be in accordance with the Code.

2.2.5 Nondestructive examination of pressure containing parts shall be in accordance with Section ND 2500 of the Code, and ASME Section V. Certified NDE Reports shall be submitted.

2.2.6 Thickness measurements shall be made on the body, bonnet and wedge after completion of all machining and wall reduction operations, to verify that the valve minimum design wall thicknesses have not been infringed upon. A certified Wall Thickness Measurement Report shall be submitted.

2.2.7 The valve shall be hydrostatic tested (with demineralized water) in accordance with ASME/ANSI B16.34 as modified by Paragraph ND-3531 of the Code. A certified Hydrostatic Test Report shall be submitted.

2.2.8 All traces of hydrostatic test water shall be removed from the interior of the valve by blowing out with dry compressed air. The interior of the valve shall be clean and free from heavy rust, scale, and foreign material. Scattered light rust bloom is acceptable.

2.2.9 Non-machined exterior surfaces shall be painted with the manufacturer's standard paint suitable for the specified design temperature. Exterior machined surfaces shall be given a light coat of a solvent soluble rust preventative.

2.3 **PACKAGING AND SHIPPING**

2.3.1 Preparation for shipment shall conform to the manufacturer's standard, and as a minimum shall provide protection against corrosion and damage from normal handling and storage.

2.3.2 Minimum preparation shall include the following:

A. Flange faces shall be protected with a wood, metal or plastic flange protector (minimum 1/8 inch thick). A non-metallic gasket or equivalent shall be furnished between the flanges and the protector when a metallic or wood flange protector is used.

B. Valves shall be prepared for shipment in such a manner to avoid damage or atmospheric corrosion to the inside or outside surfaces, or parts during storage or while in transit. Gate valves shall be shipped in the closed position.

PART 3 EXECUTION

(Not Used)

END OF SECTION

9212413041 8

THIS PAGE INTENTIONALLY
LEFT BLANK

ATTACHMENT A

PIPING SPECIALTY ITEM LIST

SYSTEM No. 42
SHEET NO. 1 OF 1, REV. A
DATE 3/12/91, BY HLF

SP/
_/

THIS SYMBOL ON FLOW DIAGRAMS OR DRAWINGS DENOTES A PIPING SPECIALTY ITEM NOT OTHERWISE COVERED BY PIPING SPECIFICATIONS.

REV	SP NUMBER	SIZE	LINE NUMBER	DESCRIPTION
A	42001	4"	420-001	GATE VALVE, CLASS 300 RAISED FACE, FLANGED, LOW TEMPERATURE CARBON STEEL, OS&Y, BOLTED BONNET, CHAIN OPERATED, FLEXIBLE WEDGE, PROJECT SAFETY CLASS 1, IN ACCORDANCE WITH SPECIFICATION SECTION 15061A. ASME SECTION III DIVISION 1, CLASS 3 "N" STAMPED VALVE, ANCHOR DARLING OR EQUAL.

9212413041 9

THIS PAGE INTENTIONALLY
LEFT BLANK

SECTION 15145
SUMP PUMPS

PART 1 GENERAL

1.1 SUMMARY

This specification section covers the technical requirements for the design, fabrication, inspection, testing and installation of the sump pumps. Each pump consists of a pump, electric motor driver, coupling assembly and controller.

EQUIPMENT NUMBER	EQUIPMENT NAME	QUANTITY	DBE RATED
PX-530-013A	Effluent Discharge Sump Pump	1	N
PX-530-013B	Effluent Discharge Sump Pump	1	N

1.2 REFERENCES

The publications listed below form a part of this specification section to the extent referenced. The publications are referred to in the text by the basic designation only.

AMERICAN NATIONAL STANDARDS INSTITUTE (ANSI)

ANSI B36.19M	1985 Stainless Steel Pipe

AMERICAN SOCIETY FOR TESTING MATERIAL (ASTM)

ASTM A312M	1991 Standard Specifications for Seamless and Welded Austenitic Stainless Steel Pipes
ASTM A403M	1991 Standard Specifications for Wrought Austenitic Stainless Steel Piping Fittings
ASTM A747M	1989 Cast Stainless Steel

ANTIFRICTION BEARING MANUFACTURER'S ASSOCIATION (AFBMA)

AFBMA 9	1990 Load Ratings and Fatigue Life for Ball Bearings
AFBMA 11	1990 Load Ratings and Fatigue Life for Roller Bearings

HYDRAULIC INSTITUTE STANDARD FOR CENTRIFUGAL, ROTARY AND RECIPROCATING PUMPS (HI)

HI 14th Edition, 1983

NATIONAL FIRE PROTECTION ASSOCIATION, INC (NFPA)

NFPA 70	1990 National Electrical Code

OPERATION AND SAFETY HEALTH ACT (OSHA)

OSHA 1-12.14	1978 Guards for Rotating Equipment

1.3 **RELATED REQUIREMENTS**

Specification Section 01730	Operation and Maintenance Data
Specification Section 16100	Electrical Installation
Specification Section 16110	Electrical Materials and Devices
Specification Section 16150	Motors - Induction

1.4 **DEFINITIONS**

(Not Used)

1.5 **SUBMITTALS**

Submit the following in accordance with Vendor Drawing and Data Requirements Drawings section of the Order/Subcontract.

1.5.1 Documentation showing that the motor control panel meet the requirements of Specification Section 16110, Electrical Materials and Devices.

1.5.1.1 Dimensional outline drawings showing equipment support data, equipment and performance data including performance curves. Drawings shall also include dimensions, shipping and operating weights, and clearances which must be maintained, size and location of all connections, lifting supports, material of construction, corrosion allowance, base frame including its

9212413042 1

thickness. Sectional drawings showing inside construction and details for each component shall also be provided. Drawings shall include a detailed Bill of Materials listing manufacturer, type, and ratings of all component parts or assemblies. The pump discharge and suction nozzles allowable loads shall be furnished with these documents.

1.5.1.2 Electrical Wiring Diagrams

Electrical wiring diagrams shall depict external electrical connections provided by the Seller. Diagrams shall include all connections, schematics, interfaces, wire specifications and wiring to be supplied by the Seller and ratings in KVA for the fully installed pump drive motor.

1.5.2 Technical Data

1.5.2.1 Design Calculations

Engineering design analysis with supporting calculations used to establish connected horsepower requirements, shaft sizes, bearing loads and operating characteristics. Calculations shall be complete and in sufficient details to permit a second party review.

1.5.2.2 Descriptive Literature

Descriptive literature including equipment ratings, model numbers, operating characteristics, and technical descriptions.

1.5.2.3 Data Sheets

Completed data as indicated in Attachment A.

1.5.2.4 Pump Performance Curves

Pump performance curves as described in 2.2.10 shall be provided for the pump. Performance curves shall include pump brake horsepower, efficiency, Net Positive Suction Head (NPSH) required, viscosity and specific gravity corrections.

1.5.2.5 Factory Acceptance Tests (FATs) as defined in Paragraph 2.2.10 and Field Test report in accordance with 3.2.6.

1.5.3 Spare Parts List

A list of recommended spare parts for one (1) year operation shall be supplied. The spare parts list shall include sufficient data to permit procurement from the original manufacturer or any subsupplier.

1.5.4 Installation, Operation, and Maintenance manuals shall be provided for the sump pumps furnished in accordance with this specification. Manuals shall fully detail sequences of disassembly, repair, adjustment, reassembly, lubrication, and trouble-shooting. Trouble-shooting sections shall include fault trees to guide both mechanical and electrical diagnostics. Reduced size copies of those assembly, subassembly drawings and parts lists needed for routine maintenance and overhaul shall be included. Data to be submitted in accordance with Specification Section 01730, Operation and Maintenance Data.

1.6 PROJECT OR SITE ENVIRONMENTAL CONDITIONS

1.6.1 Climatic and Geographic Site Conditions

A.	Site Elevation	714 feet above sea level
B.	Barometric Pressure	14.3 psia
C.	Outside Design Temperature	
	1) Maximum Design Temperature	110°F
	2) Minimum Design Temperature	-20°F
	3) Wet Bulb Design Temperature	68°F
D.	Inside Design Temperature	
	1) Maximum Design Temperature	110°F
	2) Minimum Design Temperature	50°F
	3) Wet Bulb Design Temperature	68°F

PART 2 PRODUCTS

2.1 MATERIALS AND EQUIPMENT

2.1.1 General Requirements

Sump pump assemblies shall be furnished by a manufacturer normally engaged in the production of submerged sump pumps. Pumps furnished in accordance with this specification section shall be a standard production of sump pumps. Sump pump unit assembly including specified accessories, instrumentation and controls shall be designed and constructed in accordance with the requirements of the Hydraulic Institute Standard for centrifugal, rotary and reciprocating pumps (HI).

All exposed moving parts shall have heavy duty, removable guards provided in accordance with OSHA standards.

2.1.2 Pump Casing

Pump casing shall be Stainless Steel 304L per ASTM A747M (Cast). The volute and discharge nozzle of the pump casing shall be cast in one piece. The casing shall be designed to withstand a hydrostatic pressure of not less than 1-1/2 times the design shutoff head of the pump.

2.1.3 Impeller

The impeller shall be Stainless Steel 304L per ASTM A747M (Cast) open type. The impeller shall be dynamically balanced.

2.1.4 Strainer

The pump intake shall be protected with a large Stainless Steel 304L slotted intake strainer with an effective free area sufficient to prevent cavitation and degradation of efficiency. Strainer shall have a free area of at least four times the cross-sectional area of the suction casing.

2.1.5 Pump Shaft

Pump shaft shall be constructed of ground and polished 304L type stainless steel with hardened wearing surfaces at intermediate shaft bearing locations. The mechanical properties and diameter of the shaft shall ensure that whip, deflection, or vibration will not be of sufficient magnitude to impose greater than design loads on the specified shaft bearings under normal operating conditions. Means shall be provided for external adjustment of the clearance between the impeller and the inner surface of the volute.

2.1.6 Bearings and Lubrication

Ball or roller bearings shall be furnished for the motor support housing above the cover plate surface, with full provision for the mechanical and hydraulic radial and thrust loads imposed. Bearings shall be sealed and grease lubricated and shall have an L-10 rating of not less than 100,000 hours life in accordance with AFBMA-9 or AFBMA-11.

Intermediate shaft bearings shall be of the sleeve type. The center distance between any two bearings on the shaft shall not exceed 4 feet 6 inches when operating at 1750RPM. Sleeve bearing length shall be not less than 2 times the shaft diameter. A sleeve bearing located near the lower extremity of the shaft shall be provided. Sleeve bearings shall be 304L stainless steel and

provided with centralized grease lubricators manually operated from a single point.

2.1.7 Flexible Couplings

Pump shaft shall be connected to the motor shaft through a flexible coupling. The flexible coupling shall act as a dielectric connector, shall not transmit vibrations or end thrust, and shall permit up to 4 degrees misalignment under normal duty.

2.1.8 Support Pipe

A type 304L stainless steel support pipe in accordance with ASTM A312M and ANSI B36.19M concentric with the pump shaft shall connect the pump to the sump cover plate. The support pipe flanges shall be machined and doweled to ensure proper alignment of the pump and shaft whenever the pipe is disassembled and reassembled in the field. The flanges shall be type 304L stainless steel in accordance with ASTM A403M.

2.1.9 Discharge Pipe

A discharge pipe running from the pump discharge outlet to the sump coverplate shall be furnished as an integral part of the pump unit. The discharge pipe shall be arranged to preclude discharge piping beyond the pump assembly from imposing loads which would tend to cause shaft misalignment. The pipe shall be type 304L stainless steel in accordance with ASTM A312M and ANSI B36.19M. The discharge end of the pipe shall terminate in a type 304L stainless steel flanged connection in accordance with ASTM A403M.

2.2 FABRICATION AND MANUFACTURE

2.2.1 General Requirements

The pump operating point shall be within 10 percent of the peak efficiency on the pump performance curve. At design conditions and at maximum horsepower along the pump curve, the horsepower requirements shall not exceed the nominal rating of the motor as shown on the nameplate (excluding service factor). all rotating parts of the assembled equipment shall operate throughout the required range without excessive vibration, thrust, or noise. The noise level shall not exceed 85 dB at 3 feet peripheral around the pump assembly.

2.2.2 Pump casing

Pump casing shall be designed for the maximum discharge pressure at pumping temperature and hydrostatic test pressure at ambient temperature as shown on the pump data sheet.

9212410425

2.2.3 Materials

Pump casing shall be 304L type stainless steel in accordance with ASTM A747M. Impeller shall be 304L type stainless steel ASTM A747M. Casting shall be sound, free from shrink or blow holes, seals, blisters, and other defects. The surfaces shall be cleaned by manufacturer's standard method. All casting burrs shall be filed or ground flush with the surface of the casting. The repair of leaks and defects in pressure casings by the use of plastic or cement compounds is not acceptable.

2.2.4 Bearings

Bearings shall be sized to take the thrust loads of 150 percent of rated capacity at maximum speed. The life for antifriction bearings specified therein shall be L-10 of 100,000 hours service life calculated in accordance with AFBMA-9 and AFBMA-11.

2.2.5 Vibration

Peak to peak vibration limits shall cover rotor vibration during shop and field tests at rated speed and throughout the full operating capacity. Peak to peak limits measured on the shaft are:

SPEED RPM	ANTIFRICTION BEARINGS (1)	SLEEVE BEARINGS (2)
1800 and below	mils 1.5	mils 1.5
(1) measured on bearing housing (2) measured on the shaft		

2.2.6 Coupling

Pump manufacturer shall mount pump and motor half couplings. Couplings shall be rated for a minimum of 150 percent of motor nameplate horsepower at design RPM. All metal flexible couplings shall be keyed to both shafts.

2.2.7 Electrical Design Requirements

Electrical supply shall be 480V, 3PH, 60H. All electrical items and assemblies shall be in accordance with Specification Section 16100 and shall comply with NFPA 70 National Electrical Code Standard.

2.2.8 Motor

Motor shall be vertical induction type motor, 1800 RPM totally enclosed fan cooled (TEFC), squirrel cage, having normal starting and break down torque. Motor shall comply with Article 430 of NFPA 70 Codes and Specifications Section 16150, Motors Induction.

2.2.9 Coatings

Electrical motor and exposed parts of the support frame for the pump shall be painted with recommended manufacturer standards. Unless specified otherwise, stainless steel, plastics, and elastomers shall not be painted.

2.2.10 Factory Acceptance Tests (FATs)

A. The Seller shall shop test the unit to verify pump performance. A detailed shop testing procedure shall be submitted prior to testing for review and approval. The Buyer shall be notified in advance of all source testing and shall be allowed to witness all tests (FATs).

B. Pump shall be tested at the factory to provide detailed performance data and demonstrate its compliance with specifications. The pump shall be hydrostatically tested for a period of time not less than 30 minutes. The test pressure shall be not less than one and one-half times the head capabilities of the maximum diameter impeller for the casing at shutoff, plus the pump maximum allowable suction head but in no case less than 250 psi (17 bars). Pump casing shall be tight at the test pressure. During the test, no visually detectable leakage shall occur at any joint.

C. Seller shall furnish certified shop test curves showing head-capacity, efficiency, and brake horsepower of the pump.

2.3 **LABELING**

In addition to the manufacturer's identification plate, pump and motor shall be supplied with a stainless steel tag containing the service name of the equipment as shown on the attached Data Sheets. Each tag shall be permanently affixed.

Corrosion resistant metal identification plate shall be permanently attached to pump (not on baseplate) and contain not less than the following information using specified units:

Manufacturer's name
Serial number of pump
Size and type of pump

9 2 1 2 4 1 3 0 4 2 7

Rated capacity
Pumping head
Specific gravity
Revolutions per minute
Maximum allowable casing working pressure at maximum pumping temperature

Pump shall be provided with a cast in or permanently attached direction of rotation arrow located on drive end of the pump.

2.4 **PACKAGING**

Preparation for shipment and packing may conform to the Seller's standards and as a minimum shall provide protection against corrosion and damage during normal handling, shipping, and storage. Minimum preparation shall include the requirements listed below.

2.4.1 Machined surfaces, threads, bearings and bearing housings shall be protected during shipment by application of grease or other suitable rust inhibiting compound.

2.4.2 Flanged openings shall be covered with metal, wood or plastic protectors. When metallic protectors are used, a nonmetallic gasket shall be installed between the flange and protector. Protectors shall be installed with a minimum of four (4) full diameter steel bolts and nuts.

2.4.3 Threaded connections and tapped holes shall be capped or plugged using compatible materials to prevent thread damage.

2.4.4 Sump Pump Unit Assembly shall be shipped fully assembled.

2.4.5 Bracing, supports, and rigging connections shall be provided to prevent damage during shipment, lifting, and unloading.

2.4.6 Separate or loose parts shall be completely boxed and attached to the main item to be shipped as a unit. All shipping boxes shall be identified by the Seller's order number, equipment number, and equipment description in ink, paint, or other indelible material.

PART 3 EXECUTION

3.1 **PREPARATION**

3.1.1 Inspection Before Installation

Inspect each piece of equipment to make sure it is complete with all accessories and is undamaged.

3.1.2 Prior to installation all equipment shipping braces, supports, packing, pipe caps, flange protecting devices, and moisture absorbent material shall be removed. Equipment shall be thoroughly cleaned and all protective greases and rust inhibiting compounds removed.

3.2 **INSTALLATION, APPLICATION AND ERECTION**

3.2.1 Install and secure pump in accordance with the manufacturer's instructions, this specification, and the Contract Drawings.

3.2.2 Lubricate equipment only as recommended by the maintenance instructions and the Contract Drawings.

3.2.3 Align and assemble pump discharge head, motor and pump within the tolerances recommended by the pump manufacturer. Piping shall then be installed and the alignment shall be checked to ensure piping installation meets installation recommendations.

3.2.4 To ensure protection from the environment, the Seller shall paint or coat each piece of equipment where coating has been damaged with matching paint and/or coating system as originally applied.

3.2.5 Inspection After Installation

The Seller shall perform inspection of Sump Pump Unit Assembly to assure compliance with this specification and Contract Drawings. The Seller shall prepare a checklist for the inspection and checkout. This checklist shall be submitted to the Buyer and shall include as a minimum all steps of inspection and checkout shown below.

A. Verify that pump and motor assembly is undamaged, clean, and free of foreign material.

B. Verify complete Sump Pump Unit Assembly is level and secured to sump cover plate in accordance with installation recommendations.

C. Verify that equipment is lubricated in accordance with installation recommendations.

D. Verify pump and pump shaft alignment, freedom of rotation, and pump/motor direction of rotation.

E. Verify that pipe connections, valves, and fasteners have been properly installed and are secure in accordance with the installation instructions and the Contract Drawings.

3.2.6 Field Testing

The pump unit shall be field tested in accordance with procedures from Hydraulic Institute Standard for Centrifugal, Rotary and Reciprocating Pumps HI.

3.3 FIELD QUALITY CONTROL

Inspection and examination to be in accordance with Paragraphs 3.2.5 through 3.2.6.

END OF SECTION

9 2 1 2 4 1 3 0 4 3 0

THIS PAGE INTENTIONALLY
LEFT BLANK

ATTACHMENT A

FLUOR DANIEL
EQUIPMENT SPECIFICATIONS

U. S. Department of Energy
Hanford Waste Vitrification Plant
Richland, Washington
DOE Contract DE-AC06-86RL10838

CENTRIFUGAL PUMPS

DS - 1

NO.	BY / DATE	REVISION

SHEET NO. 1	REV. 0
DATE 12-03-91	CONTRACT 845734
MANUFACTURER	
FLUOR P.O.	
JJI	CHK'D CD / APPR'D

ALL ITEMS SHALL COMPLY WITH GENERAL SPECIFICATION SHEETS: A-160-150145

GENERAL

Service: FIRE WATER - EFFLUENT
Pump Mfr.: DISCHARAGE
Size & Type: SUMP PUMPS
No. Stages: 1
Serial No.:

No. Motor Driven: 2
Pump Tag No.: PX-530-012/013
Motor Tag No.: SAME
Motor Provided By: MFR
Motor Mounted By:

No. Pumps Req.:
No. Turbine Driven:
Pump Tag No.:
Turbine Tag No.:
Turbine Provided By:
Turbine Mounted By:

LIQUID

Name: WATER
Pumping Temperature (°F): Normal 60 Max. 100 Min. 45
Specific Gravity: @ 60 °F = 1.00
Vapor Press. (PSIA): 0.26
Viscosity (CP): @ 60 °F = 1.12
Corrosion/Erosion Caused By: NONE
Remarks:

OPERATING CONDITIONS

Capacity (U.S. GPM): Normal 150 Rated 150
Discharge Pressure (PSIG): 22.4
Suction Pressure (PSIG): Max. ____ Rated -2.6
Differential Pressure (PSI): 25
Differential Head (Feet): 58
NPSH Available (Feet): N/A
Hydraulic Power (HP): 2.19

SITE CONDITIONS

Temp. (°F): Max. 110 Min. 50
Rel. Humid. (%): Max. 100 Min. 10
Altitude (Feet):
⊗ Indoor ⊗ Heated ○ Roof
○ Outdoor ○ Unheated ○ Sun
Area Classification:
Other:
Remarks:

PERFORMANCE (To Be Completed By Manufacturer)

Proposal Curve No.:
Speed (RPM):
Efficiency (%):
Rated Power (BHP):

Minimum Continuous Flow (GPM): Thermal ____ Stable ____
Max. Head Rated Imp. (Feet):
Max. Power Rated Imp. (BHP):

NPSH Required (Feet Water): 3% Head Drop
Suction Specified Speed:

CONSTRUCTION (To Be Completed By Purchaser and Manufacturer)

NOZZLES	SIZE	RATING	FACING	LOCATION
Suction	2 1/2	150	R.F.	
Discharge	3	150	R.F.	

MISC. CONNECTIONS	SIZE	TYPE
Drain		
Vent		
Pressure Gage		
Warm Up		
Balance Line		

Casing Mount: ☐ Foot ☒ Bracket
Centerline ☐ Near Cntrl. ☐ Inline
Casing Split: ☐ Axial ☐ Radial
Casing Type: ☐ Diffuser ☐ Staggered
☒ Single Volute ☐ Double Volute
Max. Allowable Pressure (PSIG):
At 60 °F
At Norm. Pump Temp.
Hydro Test Pressure (PSIG):
Lubrication Type: ☐ API 614
☒ Grease ☐ Ring Oil ☐ Oil Mist
☐ Flood ☐ Flinger ☐ Pressure
Remarks:

Impeller Diameter (Inches) Rated 8" Max. ____ Min. ____
Impeller Type: ☒ Open ☐ Closed
Imp. Suction: ☒ Single ☐ Double
Imp. Mount: ☐ Btwn. Brgs ☐ Overhung
Rotation (Coupling End): ☐ CW ☐ CCW
Bearing (Type/Number):
Radial
Thrust
Coupling:
Manufacturer
Type/Model
Driver Half-Coupling Mounted By:
○ Pump Mfr. ○ Driver Mfr. ○ Purchaser

Packing:
Manufacturer
Type
Size/No. Rings
Mechanical Seal:
API Class Code
Manufacturer X
Model
Mfr. Code
○ Cartridge Type Required
Gland Type/Mat'l.:
Gland Plate Taps Required for:
○ Quench ○ Flush ○ Drain ○ Vent

○ = By Purchaser ☐ = By Mfr./ Purchaser

SECP1.FRM 7-20-91 FILE: A160CP1.REC 2 12-03-1991

9 2 1 2 4 1 3 0 4 3 1

THIS PAGE INTENTIONALLY
LEFT BLANK

SECTION 15250
MECHANICAL INSULATION

PART 1 GENERAL

1.1 SUMMARY

This specification covers the requirements for the purchasing, fabrication and application of insulation for piping, instruments, vessels and equipment.

1.2 REFERENCES

The publications listed below form a part of this specification to the extent referenced. The publications are referred to in the text by the basic designation only.

AMERICAN SOCIETY FOR TESTING AND MATERIALS (ASTM)

ASTM B209	1990 Standard Specification for Aluminum and Aluminum - Alloy Sheet and Plate
ASTM C449/C449M	1988 Standard Specification for Mineral Fiber Hydraulic - Setting Thermal Insulating and Finishing Cement
ASTM C533	1985 Standard Specification for Calcium Silicate Block and Pipe Thermal Insulation
ASTM C547	1977 Standard Specification for Mineral Fiber Preformed Pipe Insulation
ASTM C552	1988 Standard Specification for Cellular Glass Thermal Insulation
ASTM C553	1970 Standard Specification for Mineral Fiber Blanket and Felt Insulation (Industrial Type)
ASTM C585	1990 Standard Practice for Inner and Outer Diameters of Rigid Thermal Insulation for Nominal Sizes of Pipe and Tubing (NPS System)
ASTM C592	1980 Standard Specification for Mineral Fiber Blanket Insulation and Blanket - Type Pipe Insulation (Metal - Mesh Covered) (Industrial Type)

9 2 1 2 4 1 3 0 4 3 2

ASTM C795	1989 Wicking-Type Thermal Insulation for Use Over Austenitic Stainless Steel
ASTM E84	1990 Standard Test Method for Surface Burning Characteristics of Building Materials

MIDWEST INSULATION CONTRACTORS ASSOCIATION (MICA)

(1988) Commercial and Industrial Insulation Standards

1.3 **RELATED REQUIREMENTS**

Specification Section 01730 Operation and Maintenance Data

1.4 **SYSTEM DESCRIPTION**

1.4.1 Design/Performance Requirements

A. Insulation is to be provided for heat conservation, process control, and protection of lines from freezing.

B. Insulation symbols as shown on the Contract Drawings are defined as follows:

Insulation Symbol	Description
IH	Hot insulation - for heat conservation and process control
ET(W)	Electric trace and insulate - for winterization for prevention of freezing

1.5 **SUBMITTALS**

Submit the following in accordance with the Vendor Drawing and Data Requirements section of the Order/Subcontract.

1.5.1 Product Data

A. One sample of each type of pipe cover insulation and removable cover insulation to be used.

B. Manufacturer's data sheets for each type of insulation and accessory material to be used.

1.5.2 Manufacturer's instructions covering handling, installation, storage and maintenance in accordance with Specification Section 01730, Operation and Maintenance Data.

9212413043 3

PART 2 PRODUCTS

2.1 MATERIALS AND/OR FABRICATION

2.1.1 Insulation thicknesses shall be in accordance with Attachment B and D.

2.1.2 Insulation materials shall have surface burning characteristics as determined by ASTM E84 not to exceed 20 for flame spread and 50 for smoke developed.

2.1.3 All insulation shall conform to ASTM C795.

2.1.4 Pipe Insulation

A. Dimensions of all pipe covers shall conform to ASTM C585.

B. Outdoor insulation shall be a calcium silicate pipe cover conforming to ASTM C533, Type I, Manville "Thermo 12," Owens Corning "Kaylo," Pabco "Super Cal Temp," or equal.

C. Below ground insulation for winterization protection shall be a polyisocyanurate pipe cover, Dow Chemical "Trymer" or equal.

D. Insulation at pipe support cradles shall be calcium silicate with a minimum compressive strength of 200 psig at 70°F.

E. Outdoor insulation for fittings shall be premolded, continuous or mitered, fitting covers manufactured from calcium silicate pipe cover as specified in Paragraph "B" above, or fibrous insulation conforming to ASTM C547, Class 3, Pabco "Hamfab" or equal.

F. Expansion joint material shall be a loose mineral fiber, temperature resistant to 450°F.

G. Removable flange and valve covers shall be per Attachment A.

2.1.5 Vessel and Equipment Insulation

A. Insulation for Vessels and Equipment larger than 36 inches O.D. shall be mineral wool blanket, 8 lbs/cu. ft. minimum density with galvanized steel hex wire mesh on both sides. The insulation shall conform to ASTM C592, Class II. Delta "Metal Mesh Blanket" or approved equal. Insulation for Fire and Process Water Tanks shall be per Attachment D.

9 2 1 2 4 1 3 0 4 3 4

B. Removable covers for pumps, valves, flanges and exchanger channels shall be per Attachment A.

2.1.6 Jacketing and Securement

A. Jacketing shall be aluminum with factory applied polykraft moisture barrier, ASTM B209, Alloy 3003 H-14 or 5005 H-14. The aluminum jacketing shall be primed and finished with a light gray baked-on enamel coating. Childers Products or approved equal.

1) 0.016" thick x 3/16" corrugated for piping; for all horizontal vessels and equipment shells; and for 36" diameter and smaller vertical vessels and equipment shells.

2) 0.019" thick x 1-1/4" corrugated for vertical vessels and equipment shells larger than 36" diameter.

3) 0.019" thick flat for vessel and equipment heads, transitions, stiffener rings and flashing rings.

B. Jacketing for valves, flanges and removable jacketing for pumps and rotating pumps and rotating equipment shall be fabricated from 0.019" thick flat, plain, ASTM B209, alloy H-3003 H-14 or 5005 H-14 aluminum jacketing. The removable jacketing shall be equipped with 300 series stainless steel buckling mechanisms and hinges.

C. Below ground winterization protection insulation covering jacketing shall be heat-shrinkable crosslinked polyolefin tape and end caps, Raychem "Thermaclad" tape and "DHEC" end caps or approved equal.

D. Securement

1) 16 gauge galvanized annealed iron wire for securing pipe insulation and for lacing of blanket insulation.

2) 3/4" wide by .020" thick, 300 series stainless steel bands for base insulation on vessels and equipment.

3) 1/2" wide x .015" thick, type 304 stainless steel bands for metal jacket on pipe less than 36" NPS.

4) Heavy duty type 304 stainless steel wing seals for piping and indoor vessels.

9212413043 5

5) Heavy duty type 304 stainless steel crimp seals for outdoor vessels.

6) #8 x 1/2" long, self tapping slotted pan head, type 302 or 304 stainless sheet metal screws with integral neoprene washer. Rockford "TEKS" or approved equal.

E. Breather Springs shall be flat, spiral wound, type 302 stainless steel. Childers Products "Chil-Springs," Techalloy Company "Breather Springs" or approved equal.

F. S-Clips shall be fabricated from 1" x .032" thick, type 304 stainless steel banding.

G. Band loops shall be fabricated from 1/2" x .015" thick, type 304 stainless steel banding.

2.1.7 Cements, Mastics, Adhesives

A. Insulating and Finishing Cement shall conform to ASTM C449/C449M, Delta "One Shot," Fibrex "Supercote" or approved equal.

B. Mastic Weathercoat shall be a water base emulsion type, elastomeric coating, metallic gray color, Childers "Vi-Cryl," Foster "Seal Fas G-P-M" or approved equal.

C. Flashing Compound shall be a high temperature asphalt sealant resistant to 450°F operating temperatures. Childers "CP-79 Stalastic" or approved equal.

D. Mitered Fitting Cement shall be recommended by the manufacturer for the type of insulation used and shall have a minimum temperature resistance of 450°F.

E. Reinforcing Fabric shall be an open mesh nylon, 10 x 10 weave for reinforcing fabric in mastic finishes. Foster "Mast-a-Fab" or approved equal.

2.2 PACKING AND SHIPPING

2.2.1 Preparation for shipment shall conform to the manufacturer's standard, as a minimum shall provide protection against weathering and damage from normal handling and storage.

PART 3 EXECUTION

3.1 INSTALLATION, APPLICATION AND ERECTION

3.1.1 General

A. Piping, vessels, and equipment shall be insulated when indicated on the Process and Instrumentation Diagrams and Contract Drawings and documents.

B. Insulation construction details shall be in accordance with applicable MICA Standard plate details, and as specified herein. In the event of conflicting requirements those requirements specified herein shall take precedence over the MICA Standard plate details (See also Attachment C).

C. Insulation materials shall be kept dry and shall not be applied wet. If materials become wet after application, they shall be dried or replaced before proceeding with application of jacketing or weatherproofing compound.

D. Pressure tests shall, if possible, be completed before insulation is installed. If insulation is applied before testing, all joints shall be left uninsulated and exposed until completion of testing. Shop welds may be insulated prior to field test if the piping has been tested in the shop.

E. Please refer to Attachment D for Insulation Details pertaining to the Fire and Process Water Storage Tank.

3.1.2 Application of Piping Insulation - General

A. The following items shall not be insulated unless otherwise noted on the contract documents, or herein:

Drains
Expansion and Rotation Joints
Vertical Steam Traps

As an exception, all electric traced items, including those items listed above, shall be insulated.

B. Valve bodies, flanges, horizontal traps, and expansion and rotation joints shall be insulated with removable covers per Attachment A.

9212413043 7

C. Pipe insulation shall be stopped short of flanged connections a sufficient distance to permit removal of bolts without damage to the pipe insulation. On insulated flanges, the areas not covered by the pipe insulation shall be covered by the flange cover.

D. Insulation expansion joints shall be provided on 21 foot maximum centers. Joints shall be 1-3/4 inch wide, packed with mineral wool or fiberglass. When applying double layer pipe insulation, the expansion joint on the outer layer shall be offset 12 inches from the joint on the inner layer.

E. Horizontal piping elevated on shoes or insulation supports shall have the insulation continuous. Horizontal piping, without shoes, shall have the insulation cut away on the bottom of the pipe for 5 to 6 inches on each side of the support, and the exposed surfaces of the insulation shall be sealed with flashing compound; or shall have the insulation continuous with protection saddles at the supports, all as shown on the drawings. Vertical piping supported by lugs or trunnions shall be insulated up to the support, and the insulation shall be sealed at the support with flashing compound.

9 2 1 2 4 1 3 0 4 3 8

3.1.3 Application - Outdoor Piping Insulation

A. Flanged valve bodies, flanges, horizontal traps, filters without mechanical equipment tag numbers and expansion and rotation joints shall be insulated with removable covers per Attachment A.

B. Fittings, screwed or socket weld valves, unions, self reinforced branch connections, and stub-ins 2 inch NPS and smaller, shall be insulated with fabricated fibrous insulation covers to a thickness equal to insulation on adjacent piping.

C. Fittings shall be insulated with continuous or mitered prefabricated sections of pipe insulation, securely wired in place.

D. Single thickness sectional pipe insulation shall be applied with longitudinal joints staggered and shall be secured with wire ties on 9 inch centers. Double thickness sectional pipe insulation shall be applied with all joints staggered and shall have the inner layer secured by at least two wires per section, with the outer layer secured

by wire ties on 9 inch centers. The insulation shall be applied with all joints tight and with all cracks and voids filled with insulating cement.

E. Insulation for heat traced piping shall be applied per Attachment B.

3.1.4 Application - Vessel and Equipment Insulation

A. Vessels and equipment shall be insulated when indicated on the Contract Drawings.

B. Manway covers, nameplates, stampings, code inspection plates, shall not be insulated unless otherwise specified on the vessel or equipment drawings.

C. Flanges on exchangers and filters with mechanical equipment tag numbers shall be insulated with removable covers per Attachment A. Base vessel/equipment insulation shall be stopped short of flanges a sufficient distance to allow for bolt removal without damage to insulation.

D. Pumps shall be insulated with removable covers per Attachment A.

E. For vessels and equipment 36 inches in diameter and smaller, preformed pipe insulation shall be used where applicable.

F. Insulation for vessels and equipment shells and transitions larger than 36 inches in diameter shall be applied by lacing together the wire mesh insulation facing on maximum centers of 12 inches. Stiffener rings shall be insulated in the same manner.

G. Heads shall have the insulation shaped so that all sections closely fit the contour of the head. Insulation for exposed heads shall be secured with bands attached to a floating ring at the apex of the head and to a circumferential band on the shell side of the shell-to-head joint. Unexposed heads shall have the insulation secured with wire to insulation supports provided by the vessel manufacturer.

3.1.5 Application of Outdoor Weatherproofing General

A. A watertight metal flashing ring shall be installed at all insulation terminations.

9 2 1 2 4 1 3 0 4 3 9

B. Heavy fillets of flashing compound shall be applied at all penetrations through the insulation.

C. Irregularly shaped surfaces, which cannot be suitably weatherproofed with metal jacketing, may be finished (with approval of the Contracting Officer) with a 3/8 inch thick layer of insulating and finishing cement. A tack coat of mastic shall be applied over the dry cement, followed by a layer of reinforcing fabric installed wrinkle free. Over the reinforcing fabric a 1/8 inch thick dry coat of mastic weathercoat shall be applied with a smooth finish. This finish shall extend approximately 2 inches under adjacent jacketing.

D. Below ground winterization protection insulation covering shall be suitably weatherproofed with wraps of heat-shrinkable tape and heat-shrinkable end caps.

3.1.6 Application - Weatherproofing for both Indoor and Outdoor Steam Piping Insulation, and for all Other Outdoor Piping Insulation

A. Straight portions of insulated piping shall have the basic insulation covered with metal jacketing, with all joints lapped a minimum of 2 inches and arranged to shed water. The jacketing shall be secured with bands on 12 inches maximum centers, with a minimum of two bands per section of jacketing.

B. Fittings shall be weatherproofed with prefabricated metal fitting covers, banded or screwed in place.

C. Flanges with removable covers shall be weatherproofed with metal covers.

D. Valve bodies with removable covers shall be weatherproofed with metal covers. (Outdoors only)

3.1.7 Application Jacketing for Vessels and Equipment

A. Vessel and tubular equipment shells shall be finished with metal jacketing.

B. On vertical vessels and equipment, the metal jacketing shall be supported on "S" clips. The metal jacketing shall be secured with bands spaced on 12 inch centers with one band at each circumferential lap. On vessels over 36 inches in diameter, screws shall be installed on vertical seams on 12 inch centers in addition to bands. Band loops

shall be installed on each band to prevent vertical movement. Loops shall be placed on 15 foot centers but not less than two loops per band. All screws shall be installed on ridges of corrugated metal weatherproofed sheets.

C. Breather springs shall be installed in each band for vessel and tubular equipment shells as follows:

Diameter	Operating Temperature	No. of Springs Per Band
5'-0" thru 7'-11"	Below 875°F	None
8'-0" thru 14'-11"	130°F and above	1
15'-0" thru 30'-0"	All Temperatures	2

NOTE: Where diameter falls between two sizes, use the larger size.

D. On horizontal vessels and tubular equipment, the metal jacketing shall be secured with bands spaced on 12 inch centers.

E. Longitudinal laps on 1-1/4 inch corrugated metal jacketing shall be finished with metal jacketing, with a minimum of 6 inches turned down on the straight side of the vessel as an overlap. The overlap shall be fastened to the jacketing on the shell with sheet metal screws on 5 inch centers. The metal head cover shall also be secured in place at the circumferential overlap with a band.

F. Heads on horizontal vessels and tubular equipment and bottom exposed heads on vertical vessels shall be finished with metal jacketing with weatherproof seams, with a minimum of 6 inches turned under the metal jacketing. The overlap shall be fastened to the jacketing on the shell with sheet metal screws on 5 inch maximum centers. The metal head covers shall also be secured in place at the circumferential overlap with a band.

G. Transitions and stiffener rings shall be finished with metal jacketing with weatherproof seams. The jacketing shall extend under the upper shell jacketing a minimum of 6 inches and down over the lower shell jacketing a minimum of 6 inches. The overlap shall be fastened to the jacketing on the shell with sheet metal screws on 5 inch centers. The metal covers shall be secured in place at the circumferential overlaps with a band.

H. Unexposed heads and skirt interiors shall not be jacketed.

9 2 1 2 4 1 3 0 4 4 1

I. Pumps, turbines and other rotating equipment do not require jacketing indoors when insulated with removable covers as specified in Attachment A. Outdoors this equipment shall be jacketed in a manner similar to MICA Plate No. 48, but with the metal jacket closely fitting the contours of the removable cover.

J. Exchanger flanges with removable covers shall be jacketed outdoors.

K. Jacketing covers for removable insulation covers shall be fabricated with riveted or seamed construction to ensure against accidental puncturing of the removable cover by sheet metal screws.

3.1.8 Instrument Insulation

A. Instruments, including components, valves, tubing and piping shall be insulated when indicated on the Process Piping and Instrumentation Flow Diagrams.

B. Care shall be taken to assure that the insulation does not hinder reading of instrument dials, sight glasses, etc.

C. In-line instruments, defined as those which cannot be blocked off or removed without affecting the process flow, shall be insulated with the same material and thickness as that specified for the adjoining pipe.

D. Remote instruments, defined as those instruments which can be blocked off and removed without affecting the normal process flow, shall be insulated with prefabricated insulated instrument housings.

9 2 1 2 4 1 3 0 4 4 2

3.2 FIELD QUALITY CONTROL

3.2.1 The installed insulation system shall be inspected by Seller for conformance with this specification, pertinent drawings, and Manufacturer's installation procedures. Areas to be included in the inspection are, but not limited to:

A. Surface to be insulated has been primed and is free of all moisture, grease and other foreign material.

B. Tracer element installed as per drawings when specified.

C. Correct insulation extent, type and thickness installed.

D. Installed insulation is dry and weatherproofing undamaged. Bands and all securing devices are spaced according to the specified limits.

E. Storage, mixing, handling, and application of all mastics, joint sealers and weatherproofing jacketing is per this specification and manufacturer's instruction.

END OF SECTION

9 2 1 2 4 1 3 0 4 4 3

ATTACHMENT A

REMOVABLE COVERS

1.0 Removable covers shall be laminate layers consisting of the following:

1.1 Inner layer - Knitted stainless steel mesh located against the hot surface.

1.2 Intermediate layer - Aluminum or stainless steel foil shall encapsulate the non-resinous fiberglass insulation blanket.

1.3 Insulation - Non-resinous glass or needled ceramic fiber sandwiched between outer jacketing and liners.

1.4 Weatherproofing - Silicone coated heavy duty fiberglass cloth applied on surface exposed to the atmosphere. It should not come in contact with surfaces over 500°F. The inner liner should come up and around to protect the edges on hot surfaces.

2.0 Materials for removable covers shall conform to the following:

2.1 Insulation shall be a mineral fiber conforming to ASTM C553, Type II. Pittsburgh Corning "Temp-Mat" or approved equal.

2.2 Intermediate liner shall be a fiberglass cloth suitable for temperatures up to 1000°F. Alpha Associates "1925/9383" or approved equal.

2.3 Quilting fasteners with self locking washers shall be stainless steel and of sufficient length for the insulation thickness, Alpha Associates "AMQ-1202-SS" or approved equal.

2.4 Lacing hooks with self locking washers shall be stainless steel and of sufficient length for the insulation thickness, Alpha Associates "AMQ-1201-SS" or approved equal.

2.5 Thread shall be Teflon coated fiberglass for service to 300°F suitable for machine sewing, Alpha Associates "D-24" or approved equal.

2.6 Lacing wire shall be 16 gauge type 304 soft annealed stainless steel.

2.7 "Hog rings" shall be 18 Gauge type 304 stainless steel, Alpha Associates or approved equal.

THIS PAGE INTENTIONALLY
LEFT BLANK

2.8 Foil shall be 0.002" (+0.0001" - 0.000") thick, aluminum for up to 750°F, and stainless steel for over 750°F.

2.9 Rivets shall be Olympic Fastening System "Olympic Bulb Tite, Type RV-6604-6 or -8 (x-length) W" or approved equal.

3.0 The covers shall be constructed such that at the edges of each section of the insulation cover, the liner shall be sewn or secured with "Hog rings" to the outer cover in a manner that totally encapsulates the insulation. Stainless steel "Hog rings" shall be used for services above 350°F.

4.0 Quilting fasteners shall be used to hold the laminar layers of insulation covers together. Lacing hooks shall be used to secure insulation cover sections together.

9 2 1 2 4 1 3 0 4 4 5

THIS PAGE INTENTIONALLY
LEFT BLANK

ATTACHMENT B

INSULATION THICKNESSES

1.0 THE TEMPERATURES FOLLOWING ARE MAXIMUM OPERATING TEMPERATURES IN DEGREES FAHRENHEIT FOR THE GIVEN THICKNESS

1.1 Optimum insulation thickness for Hot Insulation (IH).

A. The insulation thickness for Line Number HPS-4"-420-001-S-IH shall be 2-1/2 inches.

2.0 OPTIMUM INSULATION THICKNESSES FOR HEAT TRACED PIPING [ET AND ET(W)]

2.1 Flat wound self limiting electric tracing (such as Raychem "Chemelex") does not require oversize insulation when fibrous pipe cover is used. The insulation thickness shall be 1 inch thick for piping through 4 inch size, and 1-1/2 inch thick for piping sizes over 4 inches.

The Seller shall assure that rigid pipe cover fits snugly over the tracing. Measures such as using oversize or extended leg pipe cover, or grooving the inside of the pipe cover shall be employed if the diametrical tolerances of the pipe cover is not sufficient to ensure a snug fit.

9 2 1 2 4 1 3 0 4 4 6

THIS PAGE INTENTIONALLY
LEFT BLANK

ATTACHMENT C

INSULATION CONSTRUCTION DETAILS

1.0 INSULATION TERMINATION AT FLANGES (IH SERVICE)

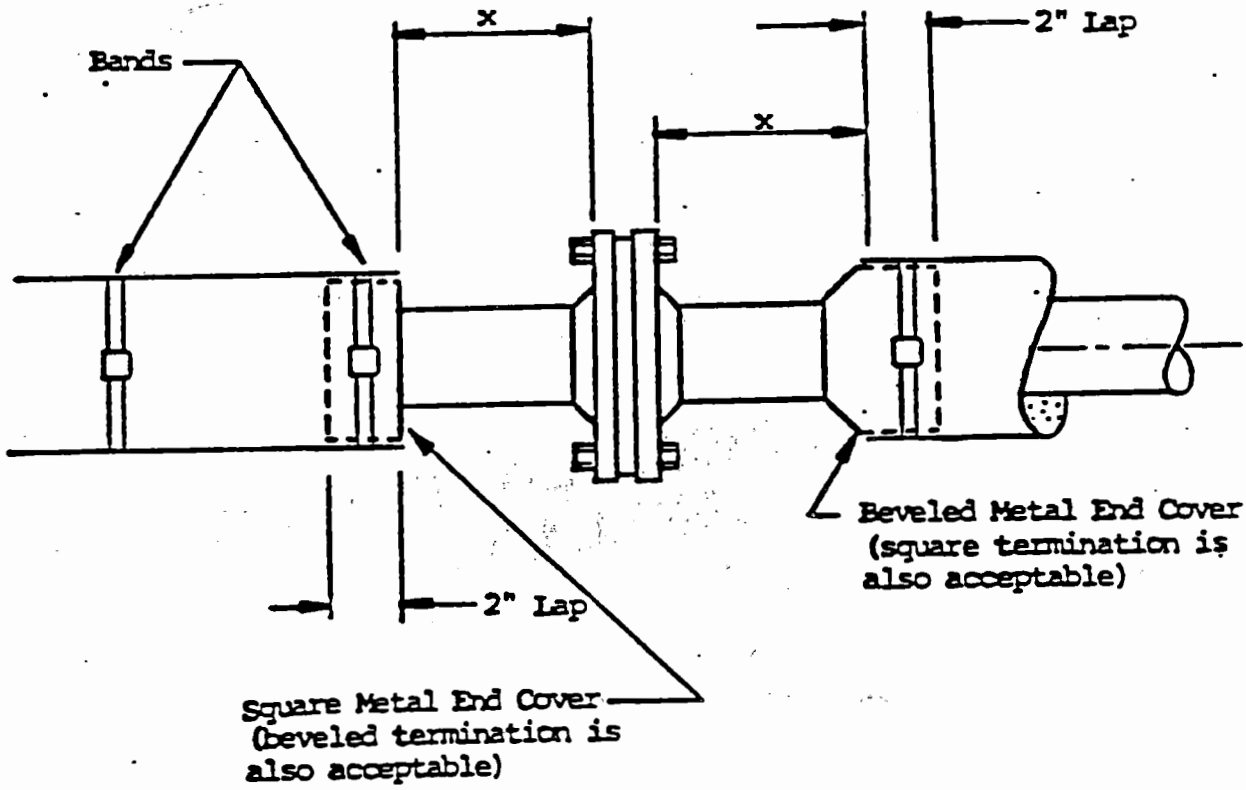

x = Bolt Length + 1"

Note: This termination detail also applies at insulated flanges. An insulating flange cover shall be provided to cover the exposed area shown in this detail. Only use the square metal end cover shown above, at insulated flanges.

9 2 1 2 4 1 3 0 4 4 7

THIS PAGE INTENTIONALLY
LEFT BLANK

ATTACHMENT C

INSULATION CONSTRUCTION DETAILS (Continued)

2.0 INSULATION TERMINATION AT FLANGED VALVES (IH SERVICE)

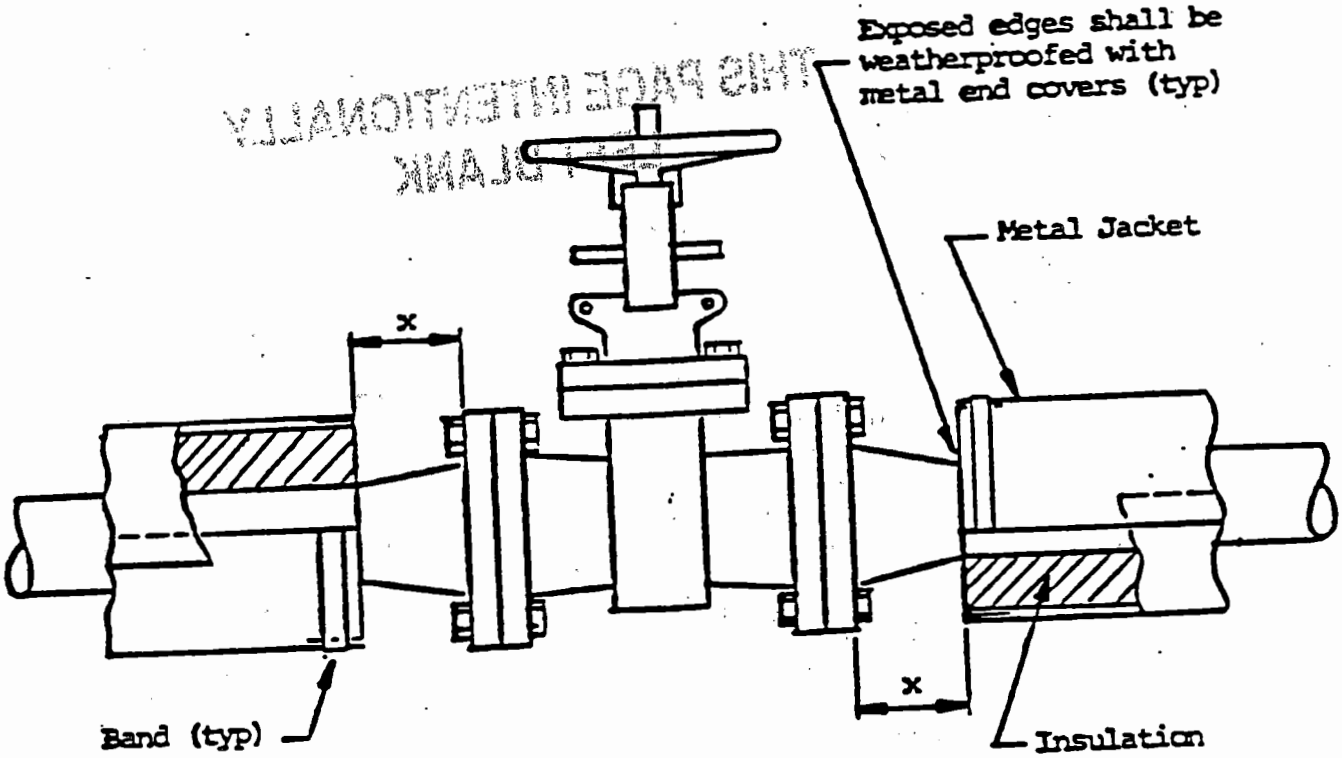

x = Bolt Length +1"

Note: This termination detail also applies at insulated flanged valves. An insulating valve cover shall be provided to cover the exposed area shown in this detail. Only use the square metal end cover shown above, at insulated flanges.

THIS PAGE INTENTIONALLY
LEFT BLANK

ATTACHMENT D

FIRE AND PROCESS WATER STORAGE TANK - INSULATION

1.0 This attachment to the specification is issued to provide the basic requirements for insulation of the Fire and Process Water Storage Tank, TK-500-001.

2.0 Materials for tank insulation shall conform to the following:

2.1 Tank roof and lower shell course insulation shall be cellular glass block with a thickness of 2 inches. (ASTM C-552)

2.2 Tank shell insulation, above the bottom course, shall be semirigid fiberglass board having a minimum density of 3.0 lbs/ft^3, with a thickness of 2 inches. (ASTM C-553, Type III, Semirigid, Class F-2)

2.3 Tank roof adhesive, for bonding roof insulation, shall be a two-part urethane modified asphalt chemical cured type as supplied by the cellular glass manufacturer.

2.4 Tank roof fabric reinforcement material shall be a 100 percent polyester type material having 6 x 6 meshes/inch, and a 0.125 inch mesh opening size as supplied by the cellular glass manufacturer.

2.5 Tank roof mastic weathercoat shall be an acrylic latex coating as supplied by the cellular glass manufacturer.

2.6 Tank shell weatherproofing shall be aluminum jacket with factory applied polykraft moisture barrier, alloy 3003 H-14 or 5005 H-14. The aluminum jacket shall be primed and finish coated with a light gray baked-on enamel coating, 0.019 inch thick x 1-1/4 inches corrugated.

2.7 Tank shell banding for base insulation and jacketing shall be 3/4 inch wide by 0.020 inch thick 300 series stainless steel bands.

2.8 Banding seals shall be heavy duty type 304 stainless steel crimp seals.

2.9 Screws shall be #8 x 1/2 inch long, self tapping slotted pan head, type 304 stainless sheet metal screws with integral neoprene washer.

2.10 Breather springs shall be flat, spiral wound, type 302 stainless steel.

9 2 1 2 4 1 3 0 4 4 9

THIS PAGE INTENTIONALLY
LEFT BLANK

2.11 S-Clips shall be fabricated from 1 inch x 0.032 inch thick, type 304 stainless steel banding.

2.12 Band loops shall be fabricated from 1/2 inch x 0.015 inch thick, type 304 stainless steel banding.

2.13 Lacing wire shall be 16 gage galvanized annealed iron wire.

2.14 Flashing compound shall be a high temperature asphalt sealant resistant to 450°F operating temperatures.

3.0 Installation and Application

3.1 All tank surfaces to be insulated shall be blast cleaned and primed prior to commencement of any insulation work. Before application of any insulation material all grease, oil, dust, frost, moisture or other foreign material shall be removed.

3.2 Tank roof shall be insulated with cellular glass block cut and shaped by the manufacturer to fit the contour of the tank roof.

3.3 Insulation adhesive shall be stored out of direct sunlight at the lowest practical temperature, without freezing, to ensure longest possible pot life. Mixing and storage of the adhesive shall be as specified by the manufacturer.

3.4 Insulation on tank roof shall be applied with staggered joint arrangement. The face and two adjoining edges of each insulation segment shall be fully coated with the adhesive using a notched steel trowel as recommended by the adhesive manufacturer. Each segment shall be placed so that when pressed into position it will form a complete sealed joint with adjacent segments. Succeeding courses shall be firmly butted against the preceding courses. All excess adhesive shall be removed from segment surfaces before the adhesive has set. All exposed edges of the insulation segments shall be coated with adhesive at the end of each work day to prevent moisture from getting into the insulation joints.

3.5 The bottom course of insulation for the tank shell shall be cellular glass having a minimum height of 18 inches and a thickness of 2 inches.

3.6 Tank shell above the bottom course shall be insulated with semi-rigid fiberglass board, secured in place with bands spaced on 18 inch centers and fastened to pencil rods. Pencil rods (furnished and installed by tank fabricator) shall be installed vertically on approximately 30 foot spacing around the tank shell. There shall be a minimum of five pencil rods installed. Fiberglass insulation shall extend from the cellular glass block (bottom course) to the rain shield at the top of the tank shell.

9212413045 0

THIS PAGE INTENTIONALLY
LEFT BLANK

4.0 Weatherproofing

4.1 Tank roof insulation shall be finished with mastic weathercoat applied directly over the cellular glass insulation.

4.2 Mastic weathercoat and fabric reinforcement shall be applied as per manufacturer's data sheet. All cautions, limitations and procedures contained therein shall be considered a part of this specification.

4.3 Tank shell shall be finished with aluminum jacket applied directly over the insulation, including the bottom course of cellular glass. Aluminum jacket shall overlap 3 inches on horizontal seams and one and one half corrugations on vertical seams. Vertical seams shall be further secured with sheet metal screws spaced on 4 inch centers. Horizontal laps shall be supported by two "S" clips per sheet. Aluminum jacket shall be secured in place with bands equipped with one breather spring per band. Bands shall be spaced with one band on each circumferential lap. Spacing shall not exceed 12 inches on center.

4.4 Bands shall be fastened to one pencil rod, then stretched across the jacket and attached to the next adjacent rod, located approximately 30 feet away on the tank shell. Voids in the insulation at pencil rod locations shall be filled with fiberglass cut to fit those voids so as not to create a thermal bridge.

4.5 Over the open joints of the jacket, at pencil rod locations, apply a batten of 1-1/4 inches corrugated aluminum jacket of sufficient width to lap two full corrugations of the adjacent installed jacket. The battens shall be secured on 4 inch vertical centers with sheet metal screws. All cut-outs and uninsulated nozzles, manways, structural projections, nameplates, or other projections shall be sealed with flashing compound.

4.6 A heavy bead of flashing compound shall be applied at the point of contact where the bottom of the first course of aluminum jacket contacts the tank concrete support ring.

9 2 1 2 4 1 3 0 4 5 1

THIS PAGE INTENTIONALLY
LEFT BLANK

ATTACHMENT D (Continued)

FIRE AND PROCESS WATER STORAGE TANK - INSULATION

1.0 TANK SHELL DETAIL

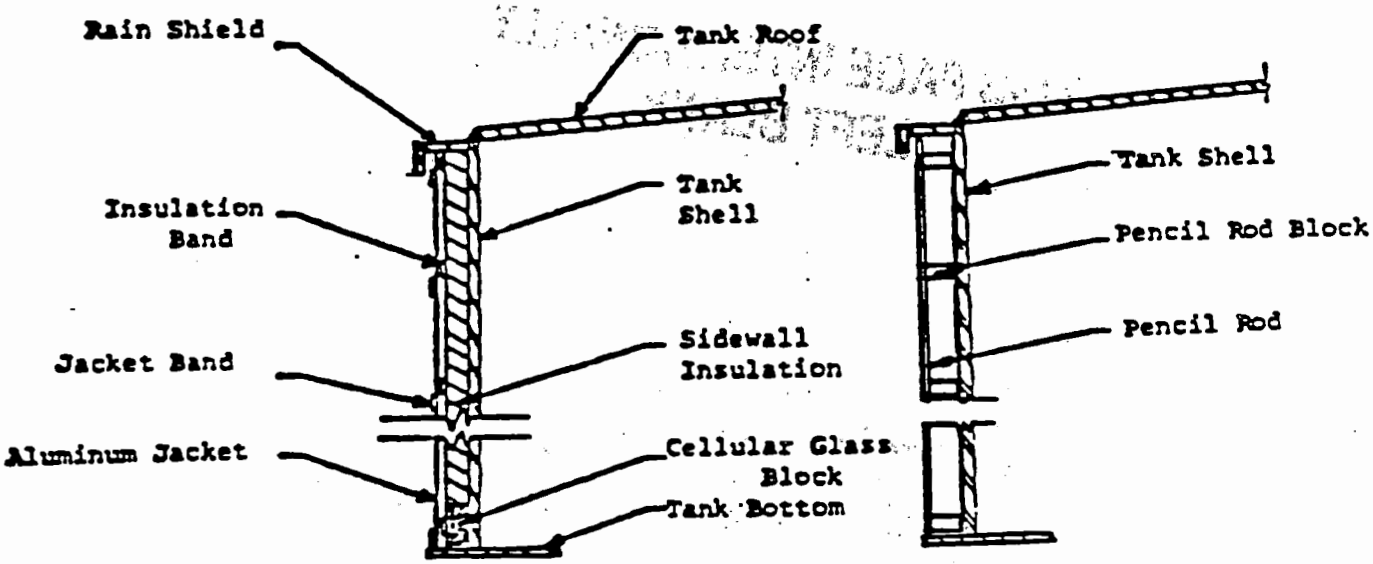

2.0 PLAN DETAIL AT PENCIL ROD

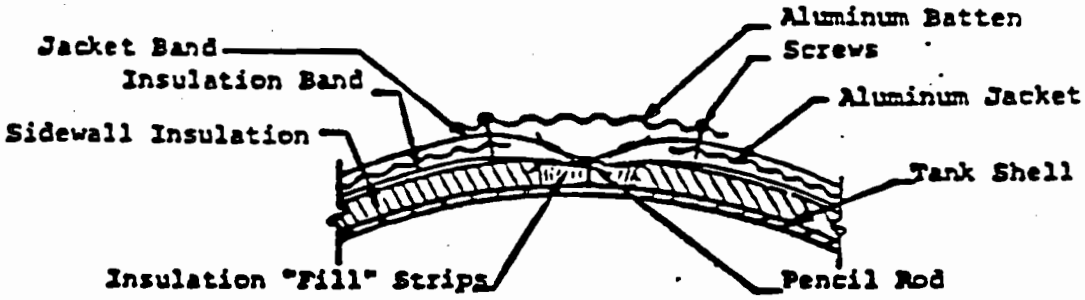

9 2 1 2 4 1 3 0 4 5 2

THIS PAGE INTENTIONALLY
LEFT BLANK

SECTION 15501
AUTOMATIC WET PIPE SPRINKLER SYSTEMS
(SAFETY CLASS 3)

PART 1 GENERAL

1.1 SUMMARY

This specification section, when accompanied by the attached Buyer's drawings and specifications, covers the requirements for the design, materials, fabrication, installation, application of coating materials, inspection and testing of the automatic sprinkler systems for the firewater and raw water pumphouses. The Hanford Waste Vitrification Plant is located in an area subject to earthquakes. Connections to the system supply shall be per Contract Drawings referenced in Paragraph 1.3 of this specification section.

The Seller shall be licensed in the State of Washington and fully qualified for the design, analysis, fabrication, and installation of automatic sprinkler systems.

1.2 REFERENCES

The publications listed below form a part of this specification section.

AMERICAN NATIONAL STANDARDS INSTITUTE (ANSI)

ANSI B1.20.1	1983 Pipe, Threads, General Purpose (Inch)

AMERICAN WATER WORKS ASSOCIATION (AWWA)

AWWA C651	1986 Disinfecting Water Mains, Addendum January 1990

FACTORY MUTUAL (FM)

FM P7825	1990 Approval Guide
FM DATA SHEET 2-8	Sprinkler Systems

INTERNATIONAL CONFERENCE OF BUILDING OFFICIALS

1991	Uniform Building Code (UBC)
1991	Uniform Building Code Standards

NATIONAL FIRE PROTECTION ASSOCIATION (NFPA)

NFPA 13	1991 Installation of Sprinkler Systems
NFPA 70	1990 National Electrical Code
NFPA 72	1990 Standard for the Installation, Maintenance and Use of Protective Signalling Systems
NFPA 1963	1985 Fire Hose Connections

UNDERWRITERS LABORATORIES INC. (UL)

1990 Underwriters Laboratories Product Directories

1.3 **RELATED REQUIREMENTS**

Contract Drawing H-2-124030	Piping, RWX Pump House/Shelter, Aboveground Plan
Specification Section 09900	Painting
Specification Section 13120	Building Accessories
Specification Section 16100	Electrical Installation
Specification Section 16110	Electrical Materials and Devices
Reference Drawing H-2-123358 Sheet 1 of 2	Piping and Instrument Diagram, System 50, Raw Water and Fire Water Systems
Reference Drawing H-2-123358 Sheet 2 of 2	Piping and Instrument Diagram, System 50, Fire and Process Water Storage

1.4 **DEFINITIONS**

GPM - Gallons Per Minute

PSIA - Pounds per Square Inch Absolute

RF - Raised Face

RMS - Root Mean Square

9 2 1 2 4 1 3 0 4 5 4

1.5 SYSTEM DESCRIPTION

The design, materials, fabrication, installation, and testing of the automatic sprinkler systems shall comply with the requirements of NFPA 13. All devices shall be listed in UL Product Directory and/or the FM Approval Guide for use in fire protection systems.

Automatic wet pipe sprinkler systems shall be provided in the firewater and raw water pumphouses in accordance this specification and the Contract Drawings. Sprinkler systems shall be designed for a minimum of 0.20 gpm per square foot density over a 2000 square foot area. Hose stream requirements shall be a minimum of 500 gpm. The determination of the adequacy of the water supply shall be made based on actual flow tests gathered using methods in NFPA 13, Appendix B. The flow test shall be in accordance with the Buyer's specified location and time. All material shall be supplied by the Seller.

1.6 SUBMITTALS

Submit the following in accordance with the Vendor Drawing and Data Requirements section of the Order/Subcontract.

1.6.1 Seller shall supply shop drawings with schematics to facilitate Buyer evaluation of each system's coverage.

1.6.2 Drawings and data submittal shall include information and calculations as required by NFPA 13, Section 1-7 and Chapter 7.

1.6.3 Catalog information including overall dimensions, model number, material and connection sizes.

1.6.4 Installation details.

1.6.5 Structural supports.

1.6.6 Complete data sheets for each type of material, equipment, procedure, and calculation.

1.6.7 Installation, operating, and maintenance manuals.

1.6.8 Component drawings.

1.6.9 Testing procedures and list of testing equipment.

1.6.10 Recommended spare parts list, including enough information to permit procurement from the original manufacturer of subsupplier.

1.6.11 Washington State license.

1.6.12 Hydraulic design calculations.

1.6.13 As-built drawings and hydraulic calculations.

1.6.14 Cleaning and painting procedures.

1.7 **PROJECT OR SITE ENVIRONMENTAL CONDITIONS**

1.7.1 Climatic and Geographic Site Conditions

A. Site Elevation 714 feet above sea level

B. Barometric Pressure 14.3 psia

C. Outside Design Temperature

1) Maximum Design Temperature 110°F

2) Minimum Design Temperature -20°F

3) Wet Bulb Design Temperature 68°F

1.7.2 Operating Environment

A. Normal Temperature 50° - 110°F

B. Relative Humidity Not controlled

PART 2 PRODUCTS

2.1 **MATERIALS AND EQUIPMENT**

2.1.1 Piping and Fittings

All pipe and fittings shall be supplied in accordance with the requirements of NFPA 13.

2.1.2 Fire Department Connections

2.1.2.1 Fire department connection hose threads shall be American National fire hose connection and in accordance with NFPA 1963. Hose valve outlet pipe threads must be approved by the Buyer before installations. The unit shall be polished cast brass, with two straight 2-1/2 inch fire department inlets, brass double clapper valves, brass rocker lug caps and chains, and cast-in function identifying lettering conforming to the requirements of NFPA 13.

2.1.2.2 Automatic ball drip valves shall be cast brass with 1/2 inch ANSI B1.20.1 threads with rough brass finish.

9 2 1 2 4 1 3 0 4 5 6

2.1.3 Sprinkler Riser Alarm Equipment

2.1.3.1 The alarm check valves and trim materials shall be standard swing check type with elastomer seat and shall be provided with standard accessories and standard and special trim necessary to give an alarm, including retard chamber, 10 inch electric bells with weatherproof enclosure, pressure gauges, testing and drain provisions and all necessary intercomponent piping, fittings and valves. A trim pressure relief valve shall be installed to prevent excess pressure in the sprinkler piping.

2.1.4 Sprinkler Head Types

2.1.4.1 Sprinkler heads shall be upright type fusible link natural brass with a temperature rating in accordance with NFPA 13. The sprinkler heads shall be provided with guards where mechanical damage is likely to occur.

2.1.5 Supervisory Switches

2.1.5.1 Supervisory switches shall be installed where required and be provided with normally open (NO) contacts. Switches shall be mounted so as not to interfere with the normal operation of the valve and shall be adjusted to operate within two revolutions of the valve control or when the stem has turned no more than 1/5 of the distance from its normal position. The mechanism shall be contained in a weatherproof housing, which shall be provided with 3/4 inch tapped conduit entrance and incorporate the necessary facilities for attachment to the valve. Switch housings shall be painted red. The switch mechanism shall have a rating of 5 amps at 125 Vac -0.25 amp at 125 Vdc. The entire installed assembly shall be arranged to cause a switch operation if the unit is removed from its mounting.

2.1.6 Wafer Check Valves

2.1.6.1 The fire department wafer check valves shall be cast iron with red paint finish, steel clapper, and with an elastomer seat.

2.1.7 Pressure Switches

2.1.7.1 Pressure switches shall be two SPDT, Snap Action, United Electric 115-Series or equal. Tag No. PSH-500-193 and PSH-500-196.

9 2 1 2 4 1 3 0 4 5 7

2.1.7.2 Switch housings shall be designed for NEMA 4 in accordance with NEMA 250.

2.1.7.3 Process connection shall be 1/2 FNPT and electrical conduit connection shall be 3/4 inch FNPT hub.

2.1.7.4 Setpoint shall be adjustable by means of an internal screw.

2.1.7.5 All switches shall be set to the actuation point prior to installation.

2.1.7.6 Switch setpoints shall be adjustable over the full input range.

2.1.7.7 Switch shall be snap acting type rated 5 amperes minimum at 120 Vac, noninductive.

2.1.7.8 Setpoint repeatability shall be within ±1 percent of full scale throughout entire setpoint range.

2.1.7.9 Setpoint differential (dead band) shall be fixed and shall not be more than 3 percent of the switch setting.

2.1.7.10 Proof pressure shall be at least 150 percent of the switch range.

2.1.7.11 Threaded connections shall be in accordance with ANSI B1.20.1.

2.1.8 Flow Orifice

2.1.8.1 The inspector's test connections shall include a smooth bore corrosion resistant orifice giving a flow equivalent of one sprinkler simulating the least flow from an individual sprinkler in the system.

2.1.9 Pressure Gauges

2.1.9.1 Pressure gauges shall be 4-1/2 inch diameter, Ashcroft Model No. 13795 or equal. Tag Numbers PI-500-191, PI-500-192, PI-500-194, PI-500-195.

2.1.9.2 Connection shall be 1/2 inch MNPT for local mounting.

2.1.9.3 Pressure elements shall be 316 stainless steel.

2.1.9.4 Pressure gauge movements shall be hardened stainless steel. Bronze or stainless steel may be used with bronze tubes.

2.1.9.5 Overpressure protection shall be 1 and 1/3 times the maximum tube rating to prevent permanent set or loss of calibration from continuous overpressurization. Lower pressure range gauges which utilize wide bourdon tube design which inherently would not have the above characteristic shall be furnished with external gauge protectors for overpressure protection.

2.1.9.6 Cases for pressure gauges shall be black phenolic or aluminum with black epoxy paint, with a screwed ring or plastic turret with snap ring to hold the glass in place. Glass shall be shatter resistant type. Cases shall be weatherproof. Blowout protection shall be provided on all process service gauges connected directly to the pressure source. Rupture discs or blowout plugs shall be installed on the lower side of the case for local mounted gauges and on the back for board mounted gauges.

2.1.9.7 Dials shall be painted white, non-rusting metal, with black figures and graduations. Dial faces shall be marked with the words "Steel Tube" or "Stainless Steel Tube." Dial range shall be 0-200 psig.

2.1.9.8 Pointers shall have micrometer adjustment and shall be field adjustable.

2.1.9.9 Accuracy shall be ±1/2 percent of maximum scale.

2.1.9.10 Pressure snubbers shall be provided for gauges in pulsating service.

2.1.10 Sway Bracing

2.1.10.1 The wet pipe sprinkler piping systems shall be supported in accordance with NFPA 13, Section 4-5.4.3. The Seller shall also be responsible for implementing earthquake design requirements as specified in NFPA 13, Section 4-5.4.3 and UBC Standard 38-1 Seismic Zone 4, Section 38.129, and FM Data Sheet 2-8.

2.1.11 Fire Alarm Panel

Two fire alarm panels shall be provided, installed, and wired in accordance with the requirements of NFPA 70, NFPA 72, NFPA 13, Section 3.1.2 and the Contract Drawings. One panel shall be located in the Fire Water Pumphouse building and one in the Raw Water Pumphouse shelter. The fire alarm panels shall include all of the following features.

2.1.11.1 Local alarms for the automatic sprinkler waterflow pressure switch.

9 2 1 2 4 1 3 0 4 5 9

2.1.11.2 Trouble signals for all devices and circuits as required by NFPA 13 and NFPA 72.

2.1.11.3 Emergency battery backup for system operation.

2.1.11.4 Electrical supervision of all circuits as required by NFPA 72.

2.1.11.5 Output contacts and terminals for connection to the Hanford Radio Master Box System, including waterflow alarm, trouble, and supervisory signals.

2.2 DESIGN REQUIREMENTS

Seller shall furnish all fire protection material and equipment. All materials and equipment furnished in accordance with this specification shall be standard equipment, new, designed for the use intended, and conform to the types and sizes defined in NFPA.

2.3 SHOP COATING

Components shall be coated with manufacturer's standard shop coating. Stainless steel parts shall not be coated. Coating shall withstand the environmental conditions described in Paragraph 1.7.

2.4 LABELING

2.4.1 All automatic sprinkler equipment shall be provided with an 18 gauge (minimum) stainless steel tag bearing the tag number and a description of the service (stamped or engraved).

2.4.2 Tag shall be permanently affixed to the automatic sprinkler equipment using stainless steel wire where possible, otherwise the use of stainless steel screws or rivets is acceptable. This tag is in addition to any standard nameplate showing manufacturer, model number, etc.

2.5 CLEANING

All equipment shall be shipped in a thoroughly clean condition. No sand, oil, grit, grease (except where required for lubrication), weld spatter, or other foreign material shall be present. All openings shall be capped or otherwise sealed with a dust-tight enclosure.

9 2 1 2 4 1 3 0 4 6 0

2.6 **INSPECTION AND TESTING**

2.6.1 Wet pipe sprinkler system equipment shall be inspected in accordance with the requirements of NFPA 13.

The Buyer shall prepare a construction acceptance test package for Contractor start-up personnel for approval which documents all hand-over package test requirements.

2.6.2 The Seller shall submit an Inspection/Test Report verifying that the above requirements have been met. The Buyer shall be notified in advance of the time and date of the test so that he may witness any or all portions necessary.

PART 3 EXECUTION

3.1 **INSTALLATION, APPLICATION AND ERECTION**

3.1.1 General

Installation, workmanship, fabrication, assembly, erection, examination, inspection, and testing shall be in accordance with NFPA 13, except as modified herein. Install piping straight and true to bear evenly on hangers and supports. Do not hang piping from plaster ceilings. Keep the interior and ends of new piping and existing piping affected by Seller's operations thoroughly cleaned of water and foreign matter. Keep piping systems clean during installation by means of plugs or other approved methods. When work is not in progress, securely close open ends of piping to prevent entry of water and foreign matter. The main drain and inspector's test drain shall be piped outside of the building. Seller shall provide all wall sealant materials. Inspect piping before placing into position. All penetrations shall be sealed in accordance with Specification Section 13120, Building Accessories.

3.1.2 Electrical Work

Provide electrical work associated with this section under Related Document Section 1.3, Specification Section 16100 Electrical Installation and Specification Section 16110 Electrical Materials and Devices. Provide control and fire alarm wiring, including connections to fire alarm systems, under this section in accordance with NFPA 70. Provide wiring in rigid metal conduit or intermediate metal conduit, except electrical metallic tubing conduit may be used in dry locations not enclosed in concrete or where not subject to mechanical damage.

9 2 1 2 4 1 3 0 4 6 1

3.1.3 Field Painting

Painting shall be in accordance with Specification Section 09900, Painting.

3.2 FIELD QUALITY CONTROL

The Seller shall be responsible to perform tests to determine compliance with the specified requirements in the presence of the Buyer. Seller shall be responsible for obtaining all approvals, inspection and any and all testing necessary before covering or concealing any piping.

END OF SECTION

9 2 1 2 4 1 3 0 4 6 2

SECTION 15505
FIREWATER UNIT TANK HEATER
(SAFETY CLASS 3)

PART 1 GENERAL

1.1 SUMMARY

This specification defines the technical requirements for furnishing, inspecting, testing and installing the following electric heaters and control panels.

1.2 REFERENCES

The publications listed below form a part of this specification to the extent referenced. The publications are referred to in the text by the basic designation only.

AMERICAN NATIONAL STANDARDS INSTITUTE (ANSI)

ANSI B1.20.1	1983 Pipe Threads, General Purpose
ANSI B16.5	1988 Pipe Flanges and Flanged Fittings

AMERICAN SOCIETY OF MECHANICAL ENGINEERS (ASME)

SECTION II, Part A	Material Specifications
SECTION VIII, Division I	Pressure Vessels

FACTORY MUTUAL (FM)

Directory	1991 Approval Guide

FEDERAL STANDARDS (FED-STD)

FED-STD-595B	1989 Colors Used in Government Procurement

INSTRUMENT SOCIETY OF AMERICA (ISA)

ISA-S20	1981 Specification Forms for Process Measurement and Control Instruments, Primary Elements and Control Valves

9 2 1 2 4 1 3 0 4 6 3

MILITARY STANDARD (MIL-STD)

MIL-STD-1472D	1989 Human Engineering Design Criteria for Military Systems Equipment and Facilities. Change Notice 1, 1991

NATIONAL ELECTRICAL MANUFACTURER'S ASSOCIATION (NEMA)

NEMA 250	1985 Enclosures for Electrical Equipment (1000 Volts Maximum)
NEMA-ICS-6	1988 (Revision March 1989) Enclosures for Industrial Controls and Systems

NATIONAL FIRE PROTECTION ASSOCIATION (NFPA)

NFPA 22	1987 Water Tanks for Private Fire Protection
NFPA 70	1990 National Electrical Code (NEC)

STEEL STRUCTURES PAINTING COUNCIL (SSPC)

SSPC-SP2	1982 Hand Tool Cleaning

UNDERWRITERS LABORATORIES, INC. (UL)

UL-486A	1989 Wire Connectors and Soldering Lugs for Use with Copper Conductors

1.3 RELATED REQUIREMENTS

Related requirements for work referred to by number or title shall form a part of this specification to the extent required by the reference thereto:

A. Specification Section 01730, Operation and Maintenance Data

B. Specification Section 05063, Welding of Pressure Vessels

C. Contract Drawing B-595-C-A160 H-2-123358, Sheets 1 and 2

D. Specification Section 16100, Electrical Installation

E. Specification Section 16110, Electrical Materials and Devices

1.3.1 Control Panel

See Paragraph 2.1.12

9 2 1 2 4 1 3 0 4 6 4

1.4 **DEFINITIONS**

(Not Used)

1.5 **SUBMITTALS**

Submit the following in accordance with the Vendor Drawing and Data Requirements section of the Order/Subcontract.

1.5.1 General arrangement, assembly or outline drawing or drawings shall contain the following information:

A. The layout of the equipment shall include:

1) All overall dimensions, diameters, and elevations of all assemblies and subassemblies including all clearances which must be maintained.

2) Location (elevation, projection and orientation) of every connection to the equipment, i.e., nozzles, brackets, clips, support, etc., and nameplate location.

3) Location and size of all bolts and bolt holes for support.

B. The design data, which shall include the design and manufacturing code with the year of issue, operating and design pressure and temperature, and test pressure.

C. The fabrication and date, radiographic, ultrasonic, magnetic particle or liquid penetrant tests performed and cleaning and painting requirements.

D. The complete specification and ASME code designation of all materials, including the manufacturer's Certificate of Compliance identifying the materials of construction.

E. A nozzle schedule giving for each nozzle the item or mark number, number of, size, rating, facing and designation or service.

F. The mass of the empty heater

1.5.2 Detail drawings

Shop fabrication or cross-sectional and other detail drawings shall contain the following information:

A. Full dimensions of all parts and subassemblies, where applicable.

9212413046 5

B. A complete list of materials used.

C. Control panel schematic and wiring diagram.

D. Control panel bill of materials.

E. Control panel outline drawings.

1.5.3 Completed electric heater data sheet.

1.5.4 Code Data Book

On completion of fabrication, the Seller shall furnish copies, of the following items as specified in the purchase order/ subcontract:

A. Final general arrangement or assembly drawings and, if necessary, other detailed drawings including detailed material lists.

B. Calculations of wall thicknesses and other parts subjected to pressure.

C. Certified material test reports.

D. Hydrotest chart.

E. A manufacturer's data report.

F. A photograph of the nameplate.

G. "As-built" electric heater data sheet.

1.5.5 A list of recommended spare parts for one (1) year's operation shall be supplied. Include sufficient data to permit procurement from the original manufacturer or any subsupplier.

1.5.6 Inspection in accordance with Section 3.2.6.

1.5.7 Data Sheets: The Seller shall submit completed instrument data sheets similar to ISA S20 specification forms for process measurement and control instruments, primary elements and control valves.

1.6 **PROJECT OR SITE ENVIRONMENTAL CONDITIONS**

1.6.1 Climatic and Geographic Site Conditions

A. Site Elevation 714 feet above sea level

B. Barometric Pressure 14.3 psia

9 2 1 2 4 1 3 0 4 5 6

C. Outside Design Temperature

1) Maximum Design Temperature 110°F

2) Minimum Design Temperature -20°F

3) Wet Bulb Design Temperature 68°F

D. Inside Design Temperature

1) Maximum Design Temperature 110°F

2) Minimum Design Temperature 50°F

3) Wet Bulb Design Temperature 68°F

PART 2 PRODUCTS

2.1 MATERIALS AND EQUIPMENT

2.1.1 The Seller shall be responsible for furnishing the electric heater which meets the design and process requirements specified herein and on Attachment A, Data Sheet DS-1.

2.1.2 The electric heater supplied shall be the circulation type with integral housing containing inlet and outlet connections as specified on the attached data sheet.

2.1.3 Housing shall be designed, fabricated, inspected, tested and stamped in accordance with ASME Code, Section VIII, Division 1.

2.1.4 Heating element shall be designed to provide the adsorption kilowatt (KW) rating at the watt density specified on the data sheets.

2.1.5 Materials of construction for the heater shall be in accordance with the data sheets and with the requirements of the ASME Code, Section II, Part A.

2.1.6 The heater shall be designed for operation with 480 volts, 3 phase, 60 Hertz power. Heater shall be rated to supply full output KW over an input voltage range of 460 to 480 volts. Heater design shall conform to NEMA 250, Enclosures for Electrical Equipment (1000 Volts Maximum).

2.1.7 The Seller shall furnish a control panel with the circulation heater. The panel shall conform to NEMA ICS-6, Enclosures for Industrial Controls and Systems.

2.1.8 The Seller shall verify that the heater supplied will be suitable for the specified service and shall verify that the KW, watt density, sheath temperatures and pressure drops are suitable for the process design conditions and physical sizes listed on the attached data sheet.

2.1.9 All heater flanges shall be furnished in accordance with ANSI B16.5. Flange bolt holes shall straddle normal centerlines.

2.1.10 Threaded connections shall be in accordance with ANSI B1.20.1.

2.1.11 All heater welding shall be in accordance with Specification Section 5063.

2.1.12 Control Panel LP-500-006

Control panel LP-500-006 shall have its front panel layout designed in accordance with the applicable sections of MIL-STD-1472D.

A. The operator shall have a choice between manual and automatic operation. In manual mode, the operator shall be able to operate the firewater heater pump (PX-500-003) and the firewater heater (HT-500-001) simultaneously. In automatic mode, the firewater tank water temperature shall be controlled by a temperature switch (TSHL-500-203). When the water temperature drops to 45°F, the firewater heater pump and firewater heater shall operate and pump heated water to the firewater tank. When the water temperature reaches 50°F, the firewater heater pump and firewater heater shall turn off. The firewater heater magnetic contactor shall open or close based on the following Seller furnished permissives:

1) The firewater heater pump (PX-500-003) is running.

2) Flow through the firewater heater is present (FSL-500-236).

B. When the contactor is closed, power to the heater is controlled by the temperature controller (TIC-500-218) mounted on LP-500-006.

C. The firewater heater control panel (LP-500-006) shall be furnished with the following components as a minimum:

1) ON-OFF Selector Switch (HS-500-206)

2) Power On Indicating Light

3) Contactor Closed Amber Indicating Light

4) Contactor Open Green Indicating Light

5) Indicating Electronic Temperature Controller (TIC-500-218)

6) Magnetic Contactor

7) Control Signal Indication

8) Power Disconnect

9) Control Transformer

10) SCR Assembly (JIC-500-218)

11) Over Temperature Controller

12) Terminal Block for Customer Signal Inputs

13) Logic Controller

2.2 **FABRICATION AND MANUFACTURE**

2.2.1 Electrical components and materials shall be in accordance with the National Electrical Code (NFPA 70). When available, all electrical materials and equipment and electronic devices shall be listed by Underwriters Laboratories, Inc. and shall bear the UL label or Factory Mutual approved.

2.2.2 Each electric heater and control panel shall be suitable for operation from a single 460 - 480 volt, 3 phase, 60 Hertz power source. If other voltages are required, Seller shall supply transformers with proper protection. Seller shall provide all electrical equipment and material, except as noted, to form a complete, assembled and wired unit to operate from the single power source.

2.2.3 Connections for incoming power, interlocks, remote indication, etc. shall be wired to terminal blocks in accordance with Paragraph 2.2.6. A ground lug for #2 AWG copper stranded wire shall be provided to ground the control panel.

2.2.4 Cable shall be single conductor in accordance with Section 16110, Electrical Materials and Devices.

2.2.5 Cables shall be identified in accordance with Specification Section 16100, Electrical Installation.

9 2 1 2 4 1 3 0 4 5 9

2.2.6 Terminal Blocks

A. Terminal blocks shall be in accordance with Specification Section 16110, Electrical Materials and Devices.

B. No more than two wires or one wire and one jumper strap shall be terminated on any one terminal block terminal screw. Where more wires are required, additional terminals shall be used. No uninsulated, exposed conductors shall extend beyond the sides of the terminal block or its insulated barriers. Each terminal block shall have its own identification symbols.

C. Twenty percent extra terminals per block shall be provided for spare connections.

2.3 **LABELING**

In addition to the identification plate, the electric heater shall be supplied with a stainless steel tag of 18 AWG (minimum) thickness containing the equipment name and number as shown in this specification. Each tag shall be permanently affixed.

2.4 **PACKAGING**

Preparation for shipment and packing may conform to the manufacturer's standards and as a minimum shall provide protection against corrosion and damage during normal handling, shipping and storage. Minimum preparation shall include the requirements listed below:

2.4.1 Machined surfaces, threads shall be protected during shipment by application of grease or other rust inhibiting compounds.

2.4.2 Flanged openings shall be covered with metal, wood or plastic protectors. When metallic protectors are used, a nonmetallic gasket shall be installed between the flange and protector. Protectors shall be installed with a minimum of four (4) full diameter steel bolts and nuts.

2.4.3 Threaded connections and tapped holes shall be capped or plugged using compatible materials to prevent thread damage.

2.4.4 Heater shall be shipped fully assembled on baseplate with all instruments and electrics fully wired.

2.4.5 Bracing, supports and rigging connections shall be provided to prevent damage during shipment, lifting, and unloading.

2.4.6 Separate or loose parts shall be completely boxed and attached to the main item to be shipped as a unit. All shipping boxes shall

9 2 1 2 4 1 3 0 4 7 0

be identified by the Seller's order number, equipment number, and equipment description in ink, paint, or other indelible material.

2.5 **COATINGS**

After completion of all fabrication procedures, each piece of equipment shall be thoroughly cleaned of all foreign material, including rust, and standard prime and finish paint or coatings shall be applied. Unless specified otherwise, stainless steel, nickel, brass, copper, monel, aluminum, hastelloy, lead, galvanized steel, plastic or glass surfaces shall not be painted. Heater shell top coat shall be fire red per Federal Standard 595B chip number 21105.

2.6 **SOURCE TESTING**

2.6.1 The electric heater and control panel shall be visually inspected for proper workmanship and appearance.

2.6.2 Heater element-to-flange joint and housing shall be pressure tested at 1.5 times the design pressure and held for one hour in accordance with ASME Code, Section VIII, Division 1, Paragraph UG-99.

2.6.3 Wiring shall be checked for insulation resistance according to UL-486A.

2.6.4 All circuits shall be checked for continuity.

2.6.5 The electric heater and control panel shall receive a functional test.

2.6.6 Results of all testing shall be submitted to the Buyer.

PART 3 EXECUTION

3.1 **PREPARATION**

Prior to installation, all equipment shipping braces, supports, packing, pipe caps, flange protecting devices and moisture absorbent material shall be removed.

3.2 **INSTALLATION, APPLICATION AND ERECTION**

3.2.1 Install and secure the electric heater and its control panel in accordance with the manufacturer's instructions, this specification, NFPA 22 Chapter 10 standards, UL-486A-1989 and the Contract Drawings.

3.2.2 The control panel shall be mounted to the structural steel members of the wall using a minimum of four 3/8 inch diameter machine bolts. Refer to Contract Drawings for mounting locations.

3.2.3 The electric heater shall be securely supported and all pipe connections made tight.

3.2.4 Inlet and outlet covers shall not be removed until associated piping is ready to be connected.

3.2.5 To ensure protection from the environment, the Seller shall paint or coat each piece of equipment where coating has been disturbed with matching paint and/or coating.

3.2.6 Inspection After Installation

A. The Seller shall inspect the electric heaters and control panel to assure compliance with this specification and Contract Drawings. After inspection and checkout has been completed, the Seller shall prepare and submit a checklist for the Buyer indicating that the minimum requirements listed below have been successfully accomplished.

B. Verify that equipment is wired and terminal connectors are properly torqued and that controls are set correctly.

C. Check that mounting bolts are secure.

D. Check that piping and nozzles are undamaged and connections are secure.

3.2.7 Field Testing

The heater, including the control panel shall be field tested in accordance with procedures in Chapter 7, NFPA 20. The Seller shall submit a test report consisting of test data to the Buyer.

3.3 **FIELD QUALITY CONTROL**

Inspection and examination to be in accordance with Paragraphs 3.2.6 and 3.2.7 of this specification.

END OF SECTION

9 2 1 2 4 1 3 0 4 7 2

ATTACHMENT A

FLUOR DANIEL
EQUIPMENT SPECIFICATIONS

U. S. Department of Energy
Hanford Waste Vitrification Plant
Richland, Washington
DOE Contract DE-AC06-86RL10838

ELECTRIC IMMERSION HEATERS

NO.	BY / DATE	REVISION
01	02/04/91 KJM	REVISED PRESSURE DROPS & OUTLET PRESSURE
02	07/15/91 MD	DELETED NOTE

SHEET NO. 1	REV. 0
DATE 07-05-90	CONTRACT 845734
MANUFACTURER	
FLUOR P.O.	
BY KM	CHK'D SDS / APPR'D

ALL ITEMS SHALL COMPLY WITH GENERAL SPECIFICATION SHEETS: A-160-15505

ITEM NUMBER HT-500-001 SERVICE FIRE PROTECTION
QUANTITY REQUIRED ONE TITLE FIRE WATER TANK HEATER NUMBER OF PASSES
NAME OF PROCESS STREAM FIRE WATER

FLUID CHARACTERISTICS

COMPOSITION	DESIGN	NOTES
	WATER	
SPECIFIC HEAT @ OUTLET CONDITIONS	1.00	
CONDUCTIVITY @ OUTLET CONDITIONS	--	
VISCOSITY @ OUTLET CONDITIONS	1.13	
PRESSURE @ OUTLET	15 PSIG 01	
ALLOW PRESS DROP	5 PSI 01	
TEMP @ INLET ° F	45	
TEMP @ OUTLET ° F	60	
DENSITY @ INLET LB. / CF	62.4	02
DENSITY @ OUTLET LB. / CF	62.4	
FLOW RATE LB. / HR.	5000	
ABSORPTION K. W. (75,000 BTU / HR)	22	

HEATER CHARACTERISTICS

WATTAGE	KW		FLANGE MATERIAL		C.S.
MAX. SHEATH TEMP.	°F		PIPE SIZE	IN	2"
MAX. WATT DENSITY			PIPE WALL TEMP DES		150 ° F
SHEATH MATERIAL			DESIGN PRESSURE	PSIGE	150
UNHEATED ELEMENT LENGTH	IN.		PROPOSED		
SHELL INSIDE DIAMETER			PER SKETCH		
FLANGE SIZE	IN.	2"			

FLANGE SHALL CONFORM TO
AREA CLASSIFICATION: CLASS DIV. POWER V O HZ
ADDITIONAL CODES AND STANDARDS

CONTROLS

SCR ON / OFF STAGED NO OF STAGES OTHER
THERMOSTAT CONTROLLER SHEATH OVERTEMP. THERMOCOUPLE
SHEATH OVERTEMP. SWITCH THERMOCOUPLE TYPE
POWER CONTRACTOR

DATA BY VENDOR

PRESSURE DROP INLET TO OUTLET , TO PERPENDICULAR INLET
HIGH TEMPERATURE WIRING AT JUNCTION BOX
ELEMENT DIAMETER ELEMENT HEATED LENGTH
NUMBER OF ELEMENTS

SAFETY CLASSIFICATION 3
IMPACT LEVEL 3

HWVP8.FRM 12-03-91 FILE: J14.REC.1 12-04-1991

9212413047 3

THIS PAGE INTENTIONALLY
LEFT BLANK

SECTION 15540
FIREWATER SYSTEM PUMPS
(SAFETY CLASS 3, RATED FOR SAFETY CLASS 1 DBE AS NOTED)

PART 1 GENERAL

1.1 SUMMARY

This specification section covers the technical requirements for the design, fabrication, inspection, testing and installation of the Firewater Pump Unit. "Pump" consisting of pump, motor, coupling, unit base plate assembly, flexible couplings, controller, and accessories required to make a complete firewater pump unit assembly with pump designation and quantities as indicated in Attachment A. The unit performance shall be in accordance with Underwriter Laboratories Standard (UL 448) or Factory Mutual.

1.2 REFERENCES

The publications listed below form a part of this specification section to the extent referenced. The publications are referred to in the text by the basic designation only.

AMERICAN NATIONAL STANDARDS INSTITUTE (ANSI)

ANSI B16.1	1989 Cast Iron Pipe Flanges and Flanged Fittings

AMERICAN SOCIETY OF MECHANICAL ENGINEERS (ASME)

ASME Section I Division 1	1989 Boiler and Pressure Vessel Code

ANTIFRICTION BEARING MANUFACTURER ASSOCIATION (AFBMA)

AFBMA 9	1990 Edition - Load Ratings and Fatigue Life for Ball Bearings
AFBMA 11	1990 Edition - Load Ratings and Fatigue Life for Roller Bearings

FACTORY MUTUAL

FMP 7825	1991 Approval Guide

FEDERAL STANDARDS (FED-STD)

FED-STD-595B	1989 Colors Used in Government Procurement

HYDRAULIC INSTITUTE STANDARD FOR CENTRIFUGAL, ROTARY AND RECIPROCATING PUMPS (HI)

HI	1983 14th Edition

INSTITUTE OF ELECTRICAL AND ELECTRONICS ENGINEERS (IEEE)

IEEE STD 344	1989 IEEE Recommended Practice for Seismic Qualification of Class 1E Equipment for Nuclear Power Generating Stations

INSTRUMENT SOCIETY OF AMERICA (ISA)

ISA-S20	1981 Specification Forms for Process Measurement and Control Instruments, Primary Elements and Control Valves

MILITARY STANDARD

MIL-STD-1472D	1989 Human Engineering Design Criteria for Military Systems, Equipment, and Facilities, Change Notice 1, 1991

NATIONAL ELECTRICAL MANUFACTURER'S ASSOCIATION (NEMA)

NEMA 250 NEMA-ICS-6	1988 Enclosures for Industrial Controls and Systems

NATIONAL FIRE PROTECTION ASSOCIATION, INC. (NFPA)

NFPA 20	1990 Centrifugal Fire Pumps
NFPA 70	1990 National Electrical Code

OPERATION AND SAFETY HEALTH ACT (OSHA)

OSHA 1-12.14	1978 Guards for Rotating Equipment

STEEL STRUCTURE PAINTING COUNCIL (SSPC)

SSPC-SP 6	1989 Commercial Blast

9 2 1 2 4 1 3 0 4 7 5

UNDERWRITERS LABORATORIES, INC. (UL)

UL 448	1990 Standards for Pumps in Fire Protection Service
Directory	1991 Electrical Equipment
Directory	1991 Electrical Appliance and Utilization Equipment
Directory	1991 Electrical Instruction Materials

1.3 **RELATED REQUIREMENTS**

Specification Section 05060	Welding Structural
Specification Section 01730	Operation and Maintenance Data
Specification Section 16150	Motors - Induction

1.4 **DEFINITIONS**

CHECKOUT - Refers to the quality control functions required to ensure that all mechanical equipment is per specification and installed correctly, properly adjusted, functionally operational and ready for Buyer acceptance

DBE - Design Basis Earthquake

DOE - Department of Energy

NRC - Nuclear Regulatory Commission

OBE - Operating Basis Earthquake

1.5 **SUBMITTALS**

Submit the following in accordance with the Vendor Drawing and Data Requirements section of the Order/Subcontract.

1.5.1 Drawings

Documentation stamped by a Professional Engineer registered in the State of Washington stating that the control panels for PX-500-002A/B meet the requirements of Paragraph 2.2.10.B Item 15.

1.5.1.1 Dimensional Outline Drawings - Certified dimensional outline drawings shall be provided and shall include dimensions, shipping

and operating weights, and clearances which must be maintained. These drawings shall also show design and operating temperatures and pressures, size and location of all connections, lifting supports, materials of construction, corrosion allowance, base frame including the thickness of baseplate at foundation bolts, anchor bolt locations and bolt hole diameter. Mounting details complete with location and size of fasteners shall be provided for all control panels. Also, sectional drawings showing inside arrangement construction, and details for each component. Drawings shall include a detailed Bill of Materials listing manufacturer, type, and ratings of all component parts or assemblies. The pump discharge and suction nozzles allowable loads shall be furnished with these documents.

1.5.1.2 Electrical Wiring Diagrams - Electrical wiring diagrams shall depict external electrical connections provided by the Seller. Diagrams shall include all connections, schematics, interfaces, wire specifications and wiring to be supplied by the Seller and ratings in kVA for the fully installed pump drive motor.

1.5.2 Technical Data

1.5.2.1 Design Calculations - Engineering design analysis with supporting calculations, stamped by a Professional Engineer registered by the State of Washington, used to establish connected horsepower requirements, shaft sizes, bearing loads, and operating characteristics. Calculations shall be complete and in sufficient detail to permit a second party review.

1.5.2.2 Descriptive Literature - Descriptive literature including equipment ratings, model numbers, operating characteristics, and technical descriptions.

1.5.2.3 Data Sheets

- Completed data as indicated in Attachment A (4 sheets).

- Completed instrumentation data sheets similar to ISA-20 specification forms for process measurement and control instruments, primary elements and control valves.

1.5.2.4 Pump Performance Curves - Pump performance curves shall be provided for pump. Performance curves shall include pump brake horsepower, efficiency, NPSH required, viscosity and specific gravity corrections.

1.5.2.5 Factory Acceptance Tests (FATs) as defined in Paragraph 2.2.13.

9 2 1 2 4 1 3 0 4 7 7

1.5.3 Spare Parts List

A list of recommended spare parts for one (1) years operation shall be supplied. The spare parts list shall include sufficient data to permit procurement from the original manufacturer or any subsupplier.

1.5.4 Installation, Operation, and Maintenance Manuals

Installation, operating and maintenance manuals shall be provided covering the firewater pump unit furnished in accordance with this specification. Manuals shall fully detail sequences of disassembly, repair, adjustment, reassembly, lubrication, and trouble-shooting. Trouble-shooting sections shall include fault trees to guide both mechanical and electrical diagnostics. Reduced size copies of those assembly, subassembly drawings and parts lists needed for routine maintenance and overhaul shall be included. Data to be submitted in accordance with Specification Section 01730, Operation and Maintenance Data.

1.6 **PROJECT OR SITE ENVIRONMENTAL CONDITIONS**

1.6.1 Climatic and Geographic Site Conditions

A. Site Elevation 714 feet above sea level

B. Barometric Pressure 14.3 psia

C. Outside Design Temperature

1) Maximum Design Temperature 110°F

2) Minimum Design Temperature -20°F

3) Wet Bulb Design Temperature 68°F

D. Inside Design Temperature

1) Maximum Design Temperature 110°F

2) Minimum Design Temperature 50°F

3) Wet Bulb Design Temperature 68°F

9 2 1 2 4 1 3 0 4 7 8

PART 2 PRODUCTS

2.1 MATERIALS AND EQUIPMENT

2.1.1 General Requirements

Firewater Pump Unit Assembly shall be furnished by a manufacturer normally engaged in the production of horizontal split centrifugal and close coupled jockey fire pumps. Pump furnished in accordance with this specification section shall be a standard production firewater pump. Pump unit assembly including specified accessories, instrumentation, and controls shall be designed and constructed in accordance with the requirements of NFPA 20 and be UL listed/FM approved for the intended service.

The pump unit assembly shall be in accordance with Hydraulic Institute Standard for Centrifugal, Rotary and Reciprocating Pumps (HI).

All exposed moving parts shall have heavy duty, removable guards provided in accordance with OSHA standards.

The Seller shall be responsible for the design, selection, and performance of the pumps. Pump characteristics and selection shall be per Chapter 3 of NFPA 20 and data shown on DS-1 through D5-5 (Attachment A).

2.1.2 Baseplates and Supports

A fabricated steel drive base shall be furnished such that all equipment and auxiliary piping are located within its confines and rigid enough to maintain pump machinery alignment without grouting and during shipping.

Lifting lugs or other arrangements shall be provided for hoisting and handling the assembled unit during field erection.

A. Pump and motor support pads shall be machined flat and in the same plane within 0.002 inch per foot between pads.

B. Motor support pads shall be machined to provide a minimum of 3/16 inch shim height.

C. That portion of the drive base under the pump shall have a drain pan with raised lip construction with drain connection at the pump outboard end.

D. Shaft centerlines shall be of sufficient height above the baseplate to permit the piping of all auxiliary connections.

9 2 1 2 4 1 3 0 4 7 9

E. No component of the unit shall overhang the drained baseplate except the motor conduit box.

F. Baseplate shall have mounting holes to accommodate the minimum anchorage requirements shown below. The holes shall be 3/16 inch larger than the required bolt size.

ITEM	ANCHOR BOLT SIZE
PX-500-001A/B	(6)-3/4 Ø
PX-500-002A/B	(6)-3/4 Ø
PX-500-004	(4)-1/2 Ø
PX-500-005A/B	(4)-1/2 Ø

G. Anchor bolts size shall be a minimum of 1/2 inch diameter.

H. Piping supports shall provide flexibility and accessibility necessary for proper operation and maintenance.

2.2 FABRICATION AND MANUFACTURE

2.2.1 General Requirements

The pump operating point shall be within 10% of the peak efficiency on the pump performance curve. At design conditions and at maximum horsepower along the pump curve, the horsepower requirements shall not exceed the nominal rating of the motor as shown on the nameplate (excluding service factor).

All rotating parts of the assembled equipment shall operate throughout the required range without excessive vibration, thrust, or noise. The noise level shall not exceed 85 dB at 3 feet peripheral around the pump skid.

2.2.2 Pump Casing

Pump casings shall be designed for the maximum discharge pressure at pumping temperature and hydrostatic test pressure at ambient temperature using Class 125 pound flat face flanges per ANSI Specification B16.1. The pump must come with a casing vent.

Design stress, temperature restrictions and physical properties for all pump casing materials shall be consistent with those limitations for similar materials as given in Section I, Division 1 of the ASME Code. Pressure containing parts shall be built in accordance with Section I, Division 1 of the ASME Code. Code stamp and data report forms are not required.

2.2.3 Materials

Pump casing shall be cast iron. Impeller shall be bronze. Bearings, shafting, and grease lubricated seals shall be manufacturer's standards for service intended.

Castings shall be sound, free from shrink or blow holes, scale, blisters, and other defects. The surfaces shall be cleaned by manufacturer's standard methods. All casting burrs shall be filed or ground flush with the surface of the casting. The repair of leaks and defects in pressure casings by the use of plastic or cement compounds is not acceptable.

2.2.4 Bearings

Bearings shall be sized to take the thrust loads of 150 percent of rated capacity at maximum speed. The life for antifriction bearings specified therein shall be L-10 of 100,000 hours service life calculated in accordance with AFBMA-9 and AFBMA-11.

2.2.5 Vibration

Peak-to-peak vibration limits shall apply to all pumps. These limits shall cover rotor vibration during shop and field tests at rated speed and throughout the full operating capacity. Peak-to-peak limits measured on the shaft are:

Speed (rpm)	Anti-Friction Bearings[1]
1800 and below	mils 1.5

(1) Measured on bearing housing

2.2.6 Coupling

Pump manufacturer shall mount pump and motor half couplings. Coupling shall be rated for a minimum of 150 percent of motor nameplate horsepower at design rpm. All metal flexible coupling shall be keyed to both shafts.

2.2.7 Safety Guarding

All safety guards, color coding, signs, and accessibility, etc., shall comply with OSHA and NFPA-20 requirements. Safety guards shall be designed such that the equipment being guarded is easily accessible for maintenance.

2.2.8 Alarms

Controllers shall be wired for the standard alarms as required by NFPA 20.

2.2.9 Electrical Design Requirements

The electrical motor shall be provided in accordance with NFPA 20 standards and this specification section.

Controller shall be completely assembled, wired, and tested by the manufacturer before shipment from the factory. Current-carrying parts of controllers shall not be less than 12 inches above the bottom of the controller casing.

Electrical supply shall be 480 Volt, 3 Phase, 60 Hertz.

Contacts shall be provided for remote located alarms. The alarm circuits shall be energized by the pump motor power, reduced to not more than 125 volts AC.

The controller, including enclosure, control devices, wiring elements, alarms, and signal devices, shall all be suited for fire pump service and meet NFPA-20 code requirements. Where applicable, component nameplates shall indicate fire pump service.

Transfer switch for emergency power supply is not required.

All electrical items and assemblies shall comply with NFPA 70, National Electrical Code standards.

A. Motor

Motors shall be integral, foot mounted, totally enclosed fan cooled (TEFC), squirrel-cage, induction type having normal starting and breakdown torque. Motors shall comply with Sections 6-5 and 6-6 of NFPA 20, Article 430 of NFPA 70 codes and Specification Section 16150, Motors - Induction, except as modified herein.

2.2.10 Controls

All controls shall meet the requirements of Chapter 7, of the NFPA 20 fire code for remote located, automatically controlled, controller wired for manual shutdown. The controls shall include but not be limited to: motor starter, circuit breaker, pressure-activated switch, and manual shutdown device. All controls shall be mounted in a panel satisfying NFPA-20 and NEMA 250.

9 2 1 2 4 1 3 0 4 8 2

All control panels shall have provisions for positive direct mechanical anchorage to an instrument rack or to the building floor. The control panels shall have their front panel layouts designed in accordance with the applicable sections of ML-STD-1472D. For minimum control panel requirements for each pump in the system use the following:

A. Jockey Pump (PX-500-004)

The pump is normally running all the time. Stop and start of the pump is done by the operator at local control panel LP-500-004. Pressure switch PSL-500-230 provides low pressure signal to the indicating light PAL-500-230B.

The local panel (LP-500-004) shall be furnished with the following as a minimum:

1) STOP-START Pushbuttons (HS-500-205)

2) Pump Running/Pump Not Running Indicating Lights

3) Magnetic Contactor with auxiliary contacts wired to terminal blocks for external use

4) Power Available Indicating Light

5) Power Available Auxiliary Contact wired to terminal blocks

6) Low Discharge Pressure Indicating Light (PAL-500-230B)

7) Terminal Block for external inputs

B. Firewater Pumps (PX-500-002A)[PX-500-002B]

The Firewater Pumps are normally in auto standby mode while the firewater header pressure is being maintained by the jockey pump (PX-500-004). When the header pressure drops to 85 psig (PSL-500-231)[PSL-500-232] persistently for 15 seconds (KS-500-215), PX-500-002A starts automatically. If PX-500-002A is not available or due to excessive demand, the low pressure persists for 20 seconds (KS-500-229), PX-500-002B auto starts to supply the necessary water pressure. For each pump, if the suction valve switch (ZSL-500-234) [ZSL-500-216] or the discharge valve switch (ZSL-500-235) [ZSL-500-233] indicates the respective valve is closed, the respective alarm light for the suction valve (ZAL-500-234) [ZAL-500-216] or discharge valve (ZAL-500-235)[ZAL-500-233] will light and an alarm horn on the outside of the pump house will sound. Also, pumps (PX-500-002A)[PX-500-002B] are

inhibited from starting if their respective inlet and/or outlet valves are closed. An operator action is required to shutdown the pumps. The status of both pumps is indicated in the DCS (by Buyer).

The Seller shall furnish an FM approved or UL listed fire pump flowmeter of the averaging pitot tube type. The fire pump flowmeter shall be used as a permanent installation to measure the fire pump flow performance.

The flow indicator shall have a 6 inch (minimum) dial, with a scale reading directly in GPM. The measurement accuracy shall be within ±1 percent over a scale range of 750 to 3000 GPM.

The primary flow element shall be of the averaging pitot differential pressure type which consists of a fabricated sensing tube with two internal chambers. The flow element shall be designed to measure the flow in a 10 inch diameter schedule 40 pipe. The flow element shall be furnished with instrument isolation valves and a mounting coupling.

The fire pump flowmeter shall be a Dieterich Standard. Eagle Eye flow meter, system model number FP-1500-10 or equal with annubar model number GCR-25 or equal.

The indicator shall be tagged as FI-500-251 and the flow element shall be tagged as FE-500-251.

Manual stop and start of the Firewater Pumps is done at the local panels (LP-500-002A)[LP-500-002B].

Each Firewater Pump shall be furnished with a local control panel (LP-500-002A)[LP-500-002B]. The local control panels shall have the following components as a minimum:

1) STOP-START-AUTO Switches (HS-500-215)[HS-500-229]

2) STOP-START-AUTO Indicating Lights

3) Suction Valve Closed (ZAL-500-234)[ZAL-500-216]

4) Discharge Valve Closed (ZAL-500-235)[ZAL-500-233]

5) Time Delay Relay set @ (15 sec)[20 sec] (KS-500-215)[KS-500-229]

6) Magnetic Contactor with Auxiliary Contacts wired to terminal blocks for external use

9 2 1 2 4 1 3 0 4 8 4

7) Current transmitter with 4-20 mA output, wired to the terminal block, for external use Tag IT-500-252 and IT-500-253, and Ammeter Tag IT-500-252B and IT-500-253B mounted on panel front

8) Power Available Indicating Light

9) Phase Reversed Indicating Light

10) Logic

11) Power Available Auxiliary Contact wired to terminal blocks for external use

12) Phase Reversed Auxiliary Contacts wired to terminal blocks for external use

13) Terminal Block for external signal inputs/outputs

14) Horn to be shipped loose to be installed by others. Horn shall be audible within 1/4 mile radius with 105 dB level. Horn shall be suitable for outside environment.

15) The control panel, complete with all internal relays, circuits and instruments, shall be similar to that which has been previously qualified by the Seller for use in a DOE or NRC facility. The panel shall have been qualified through a test program, by analytical methods or a combination thereof in accordance with IEEE STD 344, Section 9.2.1.

    The seismic criteria used for the qualification of the supplied panel shall be determined to be more severe than that represented by Attachment A, HWVP OBE response spectra, and Attachment B, HWVP DBE response spectra. It is noted that in certain high frequency ranges the OBE event is a more severe event than the DBE.

    Operability or functionality of the panel is required after a seismic event and is not required during the event.

C. Process Water Pumps (PX-500-005A)[PX-500-005B]

Process Water Pumps supplement the process water supply when the process water demand cannot be met by LPW. When the process water header pressure drops below low setpoint PSL-480-212 persistently for 10 seconds (KS-500-211),

Process Water Pump A starts. When the process water header pressure drops below low setpoint PSL-480-212 persistently for 20 seconds (KS-500-212), Process Water Pump B starts. When the process water header pressure rises above high setpoint PSH-480-212 pumps PX-500-005A and 005B stop automatically. If the Fire Process Water Storage Tank (FPWST) level drops below a preset level (LSL-500-209B), pumps PX-500-005A and 005B stop automatically. The status of both pumps is indicated in the DCS (by Buyer). To avoid recirculation back into the Fire and Water Storage Tank, Process Water Pumps automatically stops when Valve YV-500-210 is not closed (interlock with Panel LP-500-007).

Manual stop and start of the Process Water Pumps is done at the local panels (LP-500-005A)[LP-500-005B].

Each Process Water Pump shall be furnished with a local control panel (LP-500-005A)[LP-500-005B]. The local control panels shall have the following components as a minimum:

1) STOP-START-AUTO Switches (HS-500-211)[HS-500-212]

2) STOP-START-AUTO Indicating Lights

3) Time Delay Relay set @ (10 sec)[20 sec] (KS-500-211)[KS-500-212]

4) Magnetic contactor with auxiliary contacts wired to terminal blocks for external use for each pump

5) Power Available Indicating Light

6) Power available auxiliary contact wired to terminal blocks for external use

7) Logic

D. Raw Water Booster Pumps (PX-500-001A)[PX-500-001B]

There are two Raw Water Booster Pumps. Normally both pumps are on auto standby. If normal supply is not able to meet the fire water demand, Raw Water Booster Pumps are used to boost the fire water supply pressure. When the fire water header pressure drops below 90 psig (PSL-500-111) persistently for 5 seconds (KS-500-101), Raw Water Booster Pump A starts. When the fire water header pressure drops below 90 psig (PSL-500-111) persistently for 10 seconds (KS-500-102), Raw Water Booster Pump B starts. The status

9 2 1 2 4 1 3 0 4 8 6

of both pumps is indicated in the DCS (by Buyer). An operator action is required to shutdown the pumps.

Each Raw Water Booster Pump shall be furnished with a local control panel (LP-500-001A)[LP-500-001B]. The local control panels shall have the following components as a minimum:

1) STOP-START-AUTO Switches (HS-500-101)[HS-500-102]

2) STOP-START-AUTO Indicating Lights

3) Time Delay Relay set @ (5 sec)[10 sec] (KS-500-101)[KS-500-102]

4) Terminal blocks for external signal inputs

5) Magnetic contactor with auxiliary contacts wired to terminal blocks for external use

6) Current transmitter with 4-20 mA output, wired to the terminal block, for external use Tag IT-500-103 and IT-500-104, and Ammeter Tag IT-500-103A and IT-500-104A mounted on panel front.

7) Power Available Indicating Light

8) Power available auxiliary contact wired to terminal blocks for external use

9) Logic Blocks (YC-500-101)[YC-500-102](YC-500-109)

2.2.11 Coatings

After completion of all fabrication procedures, the external metal surfaces of the pump assembly shall be thoroughly cleaned by the removal of all water, sand, grit, weld splatter, grease, oil and foreign materials. It is necessary that the equipment be delivered in a rust free condition.

Electrical motor and centrifugal pump shall be painted in accordance with manufacturer's standard. Top coat color shall be fire red per Federal Standard 595B, Chip number 21105.

Unless specified otherwise, stainless steel, nickel, brass, copper, monel, aluminum, hastelloy, lead, galvanized steel, plastics, elastomers, or glass surfaces shall not be painted.

9 2 1 2 4 1 3 0 4 9 7

Other components, such as baseplate, support framing, and controller cabinet shall be cleaned, primed and finish coated per the manufacturer's standard with the following as minimum:

A. Cleaning preparation per SSPC-SP 6.

B. Primer coat within 10 hours of completing cleaning procedures, minimum 0.5 mils dry film thickness.

C. First top coat to be compatible with above primer coat and applied after thorough mixing in accordance with coating manufacturer's instructions. Minimum 1.5 mils dry film thickness. Color: medium shade of red.

D. Finish top coat to be compatible with first top coat and applied after thorough mixing in accordance with coating manufacturer's instructions. Minimum 1.5 mils dry film thickness. Color: Federal Standard 595B, Chip 21105 red.

Total minimum coating thickness shall be 3.5 mils.

2.2.12 Welding

All pump unit assembly welding requirements shall be to industry standard practice.

Baseplates and supports welding requirement shall be in accordance with Specification Section 05060, Welding Structural.

2.2.13 Factory Acceptance Tests (FATs)

A. The Seller shall shop test the unit to verify pump performance. A detailed shop testing procedure shall be submitted prior to testing for review and approval. The Buyer shall be notified in advance of all source testing and shall be allowed to witness all tests (FATs).

B. Pump shall be tested at the factory to provide detailed performance data and demonstrate its compliance with specifications. The pump shall be hydrostatically tested for a period of time not less than 30 minutes. The test pressure shall be not less than one and one-half times the head capabilities of the maximum diameter impeller for the casing at shutoff, plus the pump maximum allowable suction head but in no case less than 250 psi (17 bars). Pump casing shall be tight at the test pressure. During the test, no visible leakage shall occur at any joint.

9 2 1 2 4 1 3 0 4 6 8

C. Seller shall furnish certified shop test curves showing head-capacity, efficiency, and brake horsepower of the pump in accordance with NFPA 20 requirements.

2.3 LABELING

In addition to the manufacturer's identification plate, pump and motor shall be supplied with a stainless steel tag containing the service name of the equipment as shown on the attached Data Sheets. Each tag shall be permanently affixed.

Corrosion resistant metal identification plate shall be permanently attached to pump (not on baseplate) and contain not less than the following information using specified units:

- Manufacturer's name
- Serial number of pump
- Size and type of pump
- Rated capacity
- Pumping head
- Specific gravity
- Revolutions per minute
- Maximum allowable casing working pressure at maximum pumping temperature

Pump shall be provided with a cast in or permanently attached direction of rotation arrow located on drive end of the pump.

2.4 PACKAGING

Preparation for shipment and packing may conform to the Seller's standards and as a minimum shall provide protection against corrosion and damage during normal handling, shipping, and storage. Minimum preparation shall include the requirements listed below.

2.4.1 Machined surfaces, threads, bearings and bearing housings shall be protected during shipment by application of grease or other suitable rust inhibiting compound.

2.4.2 Flanged openings shall be covered with metal, wood or plastic protectors. When metallic protectors are used, a nonmetallic gasket shall be installed between the flange and protector. Protectors shall be installed with a minimum of four (4) full diameter steel bolts and nuts.

2.4.3 Threaded connections and tapped holes shall be capped or plugged using compatible materials to prevent thread damage.

9212413049 6

2.4.4 Pump Unit Assemblies shall be shipped fully assembled on baseplate.

2.4.5 The Controller shall be shipped separately and field wired to the pump assembly from the remote location.

2.4.6 Bracing, supports, and rigging connections shall be provided to prevent damage during shipment, lifting, and unloading.

2.4.7 Separate or loose parts shall be completely boxed and attached to the main item to be shipped as a unit. All shipping boxes shall be identified by the Seller's order number, equipment number, and equipment description in ink, paint, or other indelible material.

PART 3 EXECUTION

3.1 PREPARATION

3.1.1 Inspection Before Installation

Inspect each piece of equipment to make sure it is complete with all accessories and is undamaged.

3.1.2 Prior to installation all equipment shipping braces, supports, packing, pipe caps, flange protecting devices, and moisture absorbent material shall be removed. Equipment shall be thoroughly cleaned and all protective greases and rust inhibiting compounds removed.

3.2 INSTALLATION, APPLICATION AND ERECTION

3.2.1 Install and secure pump in accordance with the manufacturer's instructions, this specification, NFPA 20 Standards, and the Contract Drawings.

3.2.2 Lubricate equipment only as recommended by the maintenance instructions and the Contract Drawings.

3.2.3 Align and assemble pump discharge head, motor and pump within the tolerances recommended by the pump manufacturer. Piping shall then be installed and the alignment shall be checked to ensure piping installation meets installation recommendations.

3.2.4 To ensure protection from the environment, the Seller shall paint or coat each piece of equipment where coating has been damaged with matching paint and/or coating system as originally applied.

9 2 1 2 4 1 3 0 4 9 0

3.2.5 Inspection and Checkout, After Installation

The Seller shall perform inspection and checkout of Firewater Pump Unit Assembly to assure compliance with this specification and Contract Drawings. The Seller shall prepare a checklist for the inspection and checkout. This checklist shall be submitted to the Buyer and shall include as a minimum all steps of inspection and checkout shown below.

A. Verify that pump and motor assembly is undamaged, clean, and free of foreign material.

B. Verify complete Pump Unit Assemblies are level and secured to slab or foundation in accordance with installation recommendations.

C. Verify that equipment is lubricated in accordance with installation recommendations.

D. Verify pump and pump shaft alignment, freedom of rotation, and pump/motor direction of rotation.

E. Verify that pipe connections, valves, and fasteners have been properly installed and are secure in accordance with the installation instructions and the Contract Drawings.

F. Verify all instruments and controls are functioning properly per installation instructions and the Contract Drawings.

3.2.6 Field Testing

The pump unit, including the controller, shall be field tested in accordance with procedures in Chapter 11, NFPA 20. The Seller shall submit a test report consisting of Factory Acceptance Tests (FATs) to the Buyer.

3.3 **FIELD QUALITY CONTROL**

Inspection and examination to be in accordance with Paragraphs 3.2.5 through 3.2.6.

END OF SECTION

9212413049 1

ATTACHMENT A

FLUOR DANIEL
EQUIPMENT SPECIFICATIONS

U. S. Department of Energy
Hanford Waste Vitrification Plant
Richland, Washington
DOE Contract DE-AC06-86RL10838

CENTRIFUGAL PUMPS

DS - 4

NO.	BY / DATE	REVISION

SHEET NO. 1 OF 4	REV. 0
DATE 12-03-91	CONTRACT 845734
MANUFACTURER	
FLUOR P.O.	
JJI / CHK'D CD	APPR'D

ALL ITEMS SHALL COMPLY WITH GENERAL SPECIFICATION SHEETS: A160-15540

GENERAL

Service: FIRE PROT-RAW WATER BOOSTER PUMPS
Pump Mfr.:
Size & Type:
No. Stages:
Serial No.:

No. Motor Driven: 2
Pump Tag No.: PX-500-001 A / B
Motor Tag No.: SAME
Motor Provided By: PUMP MFR
Motor Mounted By: PUMP MFR

No. Pumps Req.: 2
No. Turbine Driven:
Pump Tag No.:
Turbine Tag No.:
Turbine Provided By:
Turbine Mounted By:

LIQUID

Name: WATER
Pumping Temperature (°F):
Normal 60 Max. 100 Min. 45
Specific Gravity: @ 60 °F = 1.00
Vapor Press. (PSIA): 0.256
Viscosity (CP): @ 60 °F = 1.129
Corrosion/Erosion Caused By: NONE
Remarks:

OPERATING CONDITIONS

Capacity (U.S. GPM):
Normal 1450 Rated 1500
Discharge Pressure (PSIG): 130
Suction Pressure (PSIG):
Max. Rated 35
Differential Pressure (PSI): 95
Differential Head (Feet): 219
NPSH Available (Feet): 100
Hydraulic Power (HP): 83

SITE CONDITIONS

Temp. (°F): Max. 110 Min. 50
Rel. Humid. (%): Max. 100 Min. 10
Altitude (Feet): 714
⊗ Indoor ⊗ Heated ○ Roof
○ Outdoor ○ Unheated ○ Sun
Area Classification:
Other:
Remarks:

PERFORMANCE (To Be Completed By Manufacturer)

Proposal Curve No.:
Speed (RPM):
Efficiency (%):
Rated Power (BHP):

Minimum Continuous Flow (GPM):
Thermal Stable
Max. Head Rated Imp. (Feet):
Max. Power Rated Imp. (BHP):

NPSH Required (Feet Water):
3% Head Drop
Suction Specified Speed:

CONSTRUCTION (To Be Completed By Purchaser and Manufacturer)

NOZZLES	SIZE	RATING	FACING	LOCATION
Suction	10"	125	R. F.	
Discharge	10"	125	R. F.	

MISC. CONNECTIONS	SIZE	TYPE
Drain		
Vent	1/2"	
Pressure Gage		
Warm Up		
Balance Line		

Casing Mount: ☒ Foot ☐ Bracket
Centerline ☐ Near Cntrl. ☐ Inline
Casing Split: ☒ Axial ☐ Radial
Casing Type: ☐ Diffuser ☐ Staggered
☒ Single Volute ☐ Double Volute
Max. Allowable Pressure (PSIG):
At 60 °F
At Norm. Pump Temp.
Hydro Test Pressure (PSIG):
Lubrication Type: ☐ API 614
☒ Grease ☐ Ring Oil ☐ Oil Mist
☐ Flood ☐ Flinger ☐ Pressure
Remarks:

Impeller Diameter (Inches)
Rated Max. Min.
Impeller Type: ☐ Open ☒ Closed
Imp. Suction: ☐ Single ☒ Double
Imp. Mount: ☐ Btwn. Brgs ☒ Overhung
Rotation (Coupling End): ☐ CW ☐ CCW
Bearing (Type/Number):
Radial
Thrust
Coupling:
Manufacturer
Type/Model
Driver Half-Coupling Mounted By:
⊗ Pump Mfr. ○ Driver Mfr. ○ Purchaser

Packing:
Manufacturer
Type
Size/No. Rings
Mechanical Seal:
API Class Code X
Manufacturer
Model
Mfr. Code
○ Cartridge Type Required
Gland Type/Mat'l.:
Gland Plate Taps Required for:
○ Quench ⊗ Flush ○ Drain ○ Vent

○ = By Purchaser ☐ = By Mfr./ Purchaser

9212413049 2

THIS PAGE INTENTIONALLY
LEFT BLANK

ATTACHMENT A

FLUOR DANIEL
EQUIPMENT SPECIFICATIONS

U. S. Department of Energy
Hanford Waste Vitrification Plant
Richland, Washington
DOE Contract DE-AC06-86RL10838

CENTRIFUGAL PUMPS

DS - 2

NO.	BY / DATE	REVISION

SHEET NO. 2 OF 4	REV. 0
DATE 12-03-91	CONTRACT 845734
MANUFACTURER	
FLUOR P.O.	
JJI / CHK'D CD	APPR'D

ALL ITEMS SHALL COMPLY WITH GENERAL SPECIFICATION SHEETS: A160-15540

GENERAL

Service: FIRE PROTECTION-FIRE WATER PUMPS
Pump Mfr.:
Size & Type:
No. Stages:
Serial No.:

No. Motor Driven: 2
Pump Tag No.: PX-500-002 A/A
Motor Tag No.: SAME
Motor Provided By: PUMP MFR
Motor Mounted By: PUMP MFR

No. Pumps Req.: 2
No. Turbine Driven:
Pump Tag No.:
Turbine Tag No.:
Turbine Provided By:
Turbine Mounted By:

LIQUID

Name: WATER
Pumping Temperature (°F): Normal 60 Max. 100 Min. 45
Specific Gravity: @ 60 °F = 1.00
Vapor Press. (PSIA): 0.256
Viscosity (CP): @ 60 °F = 1.129
Corrosion/Erosion Caused By: NONE
Remarks:

OPERATING CONDITIONS

Capacity (U.S. GPM): Normal 1450 Rated 1500
Discharge Pressure (PSIG): 130
Suction Pressure (PSIG): Max. Rated 11.0
Differential Pressure (PSI): 119
Differential Head (Feet): 275
NPSH Available (Feet): 30
Hydraulic Power (HP): 103.4

SITE CONDITIONS

Temp. (°F): Max. 110 Min. 50
Rel. Humid. (%): Max. 100 Min. 10
Altitude (Feet): 714
⊗ Indoor ⊗ Heated ○ Roof
○ Outdoor ○ Unheated ○ Sun
Area Classification:
Other:
Remarks:

PERFORMANCE (To Be Completed By Manufacturer)

Proposal Curve No.:
Speed (RPM):
Efficiency (%):
Rated Power (BHP):

Minimum Continuous Flow (GPM): Thermal Stable
Max. Head Rated Imp. (Feet):
Max. Power Rated Imp. (BHP):

NPSH Required (Feet Water): 3% Head Drop
Suction Specified Speed:

CONSTRUCTION (To Be Completed By Purchaser and Manufacturer)

NOZZLES	SIZE	RATING	FACING	LOCATION
Suction	10"	125	R.F.	
Discharge	10"	125	R.F.	

MISC. CONNECTIONS	SIZE	TYPE
Drain		
Vent	1/2"	
Pressure Gage		
Warm Up		
Balance Line		

Casing Mount: ☒ Foot ☐ Bracket
Centerline ☐ Near Cntrl. ☐ Inline
Casing Split: ☒ Axial ☐ Radial
Casing Type: ☐ Diffuser ☐ Staggered
☒ Single Volute ☐ Double Volute
Max. Allowable Pressure (PSIG):
At 60 °F
At Norm. Pump Temp.
Hydro Test Pressure (PSIG):
Lubrication Type: ☐ API 614
☒ Grease ☐ Ring Oil ☐ Oil Mist
☐ Flood ☐ Flinger ☐ Pressure
Remarks:

Impeller Diameter (Inches)
Rated Max. Min.
Impeller Type: ☐ Open ☒ Closed
Imp. Suction: ☐ Single ☒ Double
Imp. Mount: ☐ Btwn. Brgs ☒ Overhung
Rotation (Coupling End): ☐ CW ☐ CCW
Bearing (Type/Number):
Radial
Thrust
Coupling:
Manufacturer
Type/Model
Driver Half-Coupling Mounted By:
⊗ Pump Mfr. ○ Driver Mfr. ○ Purchaser

Packing:
Manufacturer
Type
Size/No. Rings
Mechanical Seal:
API Class Code X
Manufacturer
Model
Mfr. Code
○ Cartridge Type Required
Gland Type/Mat'l.:
Gland Plate Taps Required for:
○ Quench ⊗ Flush ○ Drain ○ Vent

○ = By Purchaser ☐ = By Mfr./ Purchaser

9212413049 3

THIS PAGE INTENTIONALLY
LEFT BLANK

ATTACHMENT A

FLUOR DANIEL
EQUIPMENT SPECIFICATIONS

U. S. Department of Energy
Hanford Waste Vitrification Plant
Richland, Washington
DOE Contract DE-AC06-86RL10838

CENTRIFUGAL PUMPS

DS - 1

NO.	BY / DATE	REVISION

SHEET NO. 3 OF 4	REV. 0
DATE 12-03-91	CONTRACT 845734
MANUFACTURER	
FLUOR P.O.	
JJI / CHK'D CD	APPR'D

ALL ITEMS SHALL COMPLY WITH GENERAL SPECIFICATION SHEETS: A160-15540

GENERAL

Service: FIRE PROTECTION-JOCKEY PUMPS
Pump Mfr.:
Size & Type:
No. Stages:
Serial No.:

No. Motor Driven: 1
Pump Tag No.: PX-500-004
Motor Tag No.: SAME
Motor Provided By: PUMP MFR
Motor Mounted By: PUMP MFR

No. Pumps Req.: 1
No. Turbine Driven:
Pump Tag No.:
Turbine Tag No.:
Turbine Provided By:
Turbine Mounted By:

LIQUID

Name: WATER
Pumping Temperature (°F): Normal 60 Max. 100 Min. 45
Specific Gravity: @ 60 °F = 1.00
Vapor Press. (PSIA): 0.256
Viscosity (CP): @ 60 °F = 1.129
Corrosion/Erosion Caused By: NONE
Remarks:

OPERATING CONDITIONS

Capacity (U.S. GPM): Normal ____ Rated 15
Discharge Pressure (PSIG): 105
Suction Pressure (PSIG): Max. ____ Rated 11
Differential Pressure (PSI): 94
Differential Head (Feet): 217
NPSH Available (Feet): 50 +
Hydraulic Power (HP): 0.82

SITE CONDITIONS

Temp. (°F): Max. 110 Min. 50
Rel. Humid. (%): Max. 100 Min. 10
Altitude (Feet): 714
⊗ Indoor ⊗ Heated ○ Roof
○ Outdoor ○ Unheated ○ Sun
Area Classification:
Other:
Remarks:

PERFORMANCE (To Be Completed By Manufacturer)

Proposal Curve No.:
Speed (RPM):
Efficiency (%):
Rated Power (BHP):

Minimum Continuous Flow (GPM): Thermal ____ Stable ____
Max. Head Rated Imp. (Feet):
Max. Power Rated Imp. (BHP):

NPSH Required (Feet Water): 3% Head Drop
Suction Specified Speed:

CONSTRUCTION (To Be Completed By Purchaser and Manufacturer)

NOZZLES	SIZE	RATING	FACING	LOCATION
Suction	1" NPT			
Discharge	1" NPT			

MISC. CONNECTIONS	SIZE	TYPE
Drain		
Vent	1/2"	
Pressure Gage		
Warm Up		
Balance Line		

Casing Mount: ☒ Foot ☐ Bracket
Centerline ☐ Near Cntrl. ☐ Inline
Casing Split: ☒ Axial ☐ Radial
Casing Type: ☐ Diffuser ☐ Staggered
☒ Single Volute ☐ Double Volute
Max. Allowable Pressure (PSIG):
At 60 °F
At Norm. Pump Temp.
Hydro Test Pressure (PSIG):
Lubrication Type: ☐ API 614
☒ Grease ☐ Ring Oil ☐ Oil Mist
☐ Flood ☐ Flinger ☐ Pressure
Remarks:

Impeller Diameter (Inches) Rated ____ Max. ____ Min. ____
Impeller Type: ☒ Open ☐ Closed
Imp. Suction: ☒ Single ☐ Double
Imp. Mount: ☐ Btwn. Brgs ☒ Overhung
Rotation (Coupling End): ☐ CW ☐ CCW
Bearing (Type/Number):
Radial
Thrust
Coupling:
Manufacturer
Type/Model
Driver Half-Coupling Mounted By:
⊗ Pump Mfr. ○ Driver Mfr. ○ Purchaser

Packing:
Manufacturer
Type
Size/No. Rings
Mechanical Seal:
API Class Code X
Manufacturer
Model
Mfr. Code
○ Cartridge Type Required
Gland Type/Mat'l.:
Gland Plate Taps Required for:
○ Quench ⊗ Flush ○ Drain ○ Vent

○ = By Purchaser ☐ = By Mfr./ Purchaser

9212413049 4

THIS PAGE INTENTIONALLY
LEFT BLANK

ATTACHMENT A

FLUOR DANIEL
EQUIPMENT SPECIFICATIONS

U. S. Department of Energy
Hanford Waste Vitrification Plant
Richland, Washington
DOE Contract DE-AC06-86RL10838

CENTRIFUGAL PUMPS

DS - 1

NO.	BY / DATE	REVISION

SHEET NO. 4 OF 4	REV. 0
DATE 12-03-91	CONTRACT 845734
MANUFACTURER	
FLUOR P.O.	
JJI / CHK'D CD	APPR'D

ALL ITEMS SHALL COMPLY WITH GENERAL SPECIFICATION SHEETS: A160-15540

GENERAL

Service: FIRE PROTECTION-PROCESS WATER PMPS
Pump Mfr.:
Size & Type:
No. Stages:
Serial No.:

No. Motor Driven: 2
Pump Tag No.: PX-500-005 A/B
Motor Tag No.: SAME
Motor Provided By: PUMP MFR
Motor Mounted By: PUMP MFR

No. Pumps Req.: 2
No. Turbine Driven:
Pump Tag No.:
Turbine Tag No.:
Turbine Provided By:
Turbine Mounted By:

LIQUID

Name: WATER
Pumping Temperature (°F): Normal 60 Max. 100 Min. 45
Specific Gravity: @ 60 °F = 1.00
Vapor Press. (PSIA): 0.26
Viscosity (CP): @ 60 °F = 1.12
Corrosion/Erosion Caused By: NONE
Remarks:

OPERATING CONDITIONS

Capacity (U.S. GPM): Normal 750 Rated 800
Discharge Pressure (PSIG): 84.5
Suction Pressure (PSIG): Max. Rated 8.5
Differential Pressure (PSI): 76.0
Differential Head (Feet): 171
NPSH Available (Feet): .30
Hydraulic Power (HP): 35

SITE CONDITIONS

Temp. (°F): Max. 110 Min. 50
Rel. Humid. (%): Max. 100 Min. 10
Altitude (Feet):
☒ Indoor ☒ Heated ○ Roof
○ Outdoor ○ Unheated ○ Sun
Area Classification:
Other:
Remarks:

PERFORMANCE (To Be Completed By Manufacturer)

Proposal Curve No.:
Speed (RPM):
Efficiency (%):
Rated Power (BHP):

Minimum Continuous Flow (GPM): Thermal Stable
Max. Head Rated Imp. (Feet):
Max. Power Rated Imp. (BHP):

NPSH Required (Feet Water): 3% Head Drop
Suction Specified Speed:

CONSTRUCTION (To Be Completed By Purchaser and Manufacturer)

NOZZLES	SIZE	RATING	FACING	LOCATION
Suction	6"	125	R.F.	
Discharge	6"	125	R.F.	

MISC. CONNECTIONS	SIZE	TYPE
Drain		
Vent	1/2"	
Pressure Gage		
Warm Up		
Balance Line		

Casing Mount: ☒ Foot ☐ Bracket
Centerline ☐ Near Cntrl. ☐ Inline
Casing Split: ☐ Axial ☒ Radial
Casing Type: ☐ Diffuser ☐ Staggered
☒ Single Volute ☐ Double Volute
Max. Allowable Pressure (PSIG):
At 60 °F
At Norm. Pump Temp.
Hydro Test Pressure (PSIG):
Lubrication Type: ☐ API 614
☒ Grease ☐ Ring Oil ☐ Oil Mist
☐ Flood ☐ Flinger ☐ Pressure
Remarks:

Impeller Diameter (Inches)
Rated Max. Min.
Impeller Type: ☒ Open ☐ Closed
Imp. Suction: ☒ Single ☐ Double
Imp. Mount: ☐ Btwn. Brgs ☒ Overhung
Rotation (Coupling End): ☐ CW ☐ CCW
Bearing (Type/Number):
Radial
Thrust
Coupling:
Manufacturer
Type/Model
Driver Half-Coupling Mounted By:
⊗ Pump Mfr. ○ Driver Mfr. ○ Purchaser

Packing:
Manufacturer
Type
Size/No. Rings
Mechanical Seal:
API Class Code X
Manufacturer
Model
Mfr. Code
○ Cartridge Type Required
Gland Type/Mat'l.:
Gland Plate Taps Required for:
○ Quench ⊗ Flush ○ Drain ○ Vent

○ = By Purchaser ☐ = By Mfr./ Purchaser

9212410495

THIS PAGE INTENTIONALLY
LEFT BLANK

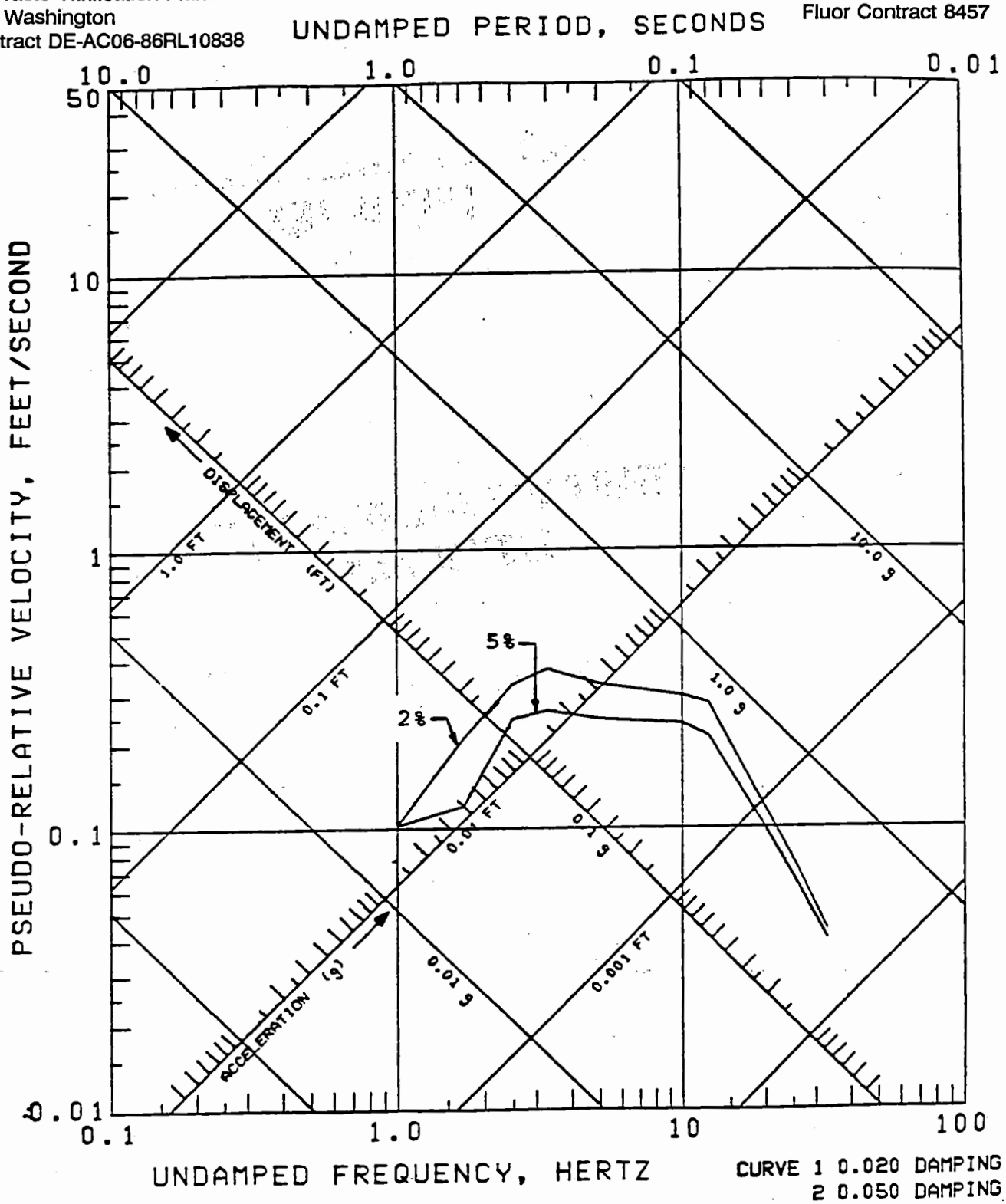

CURVE 1 0.020 DAMPING
2 0.050 DAMPING

ATTACHMENT B

HWVP OBE RESPONSE SPECTRA

9 2 1 2 4 1 3 0 4 9 6

THIS PAGE INTENTIONALLY
LEFT BLANK

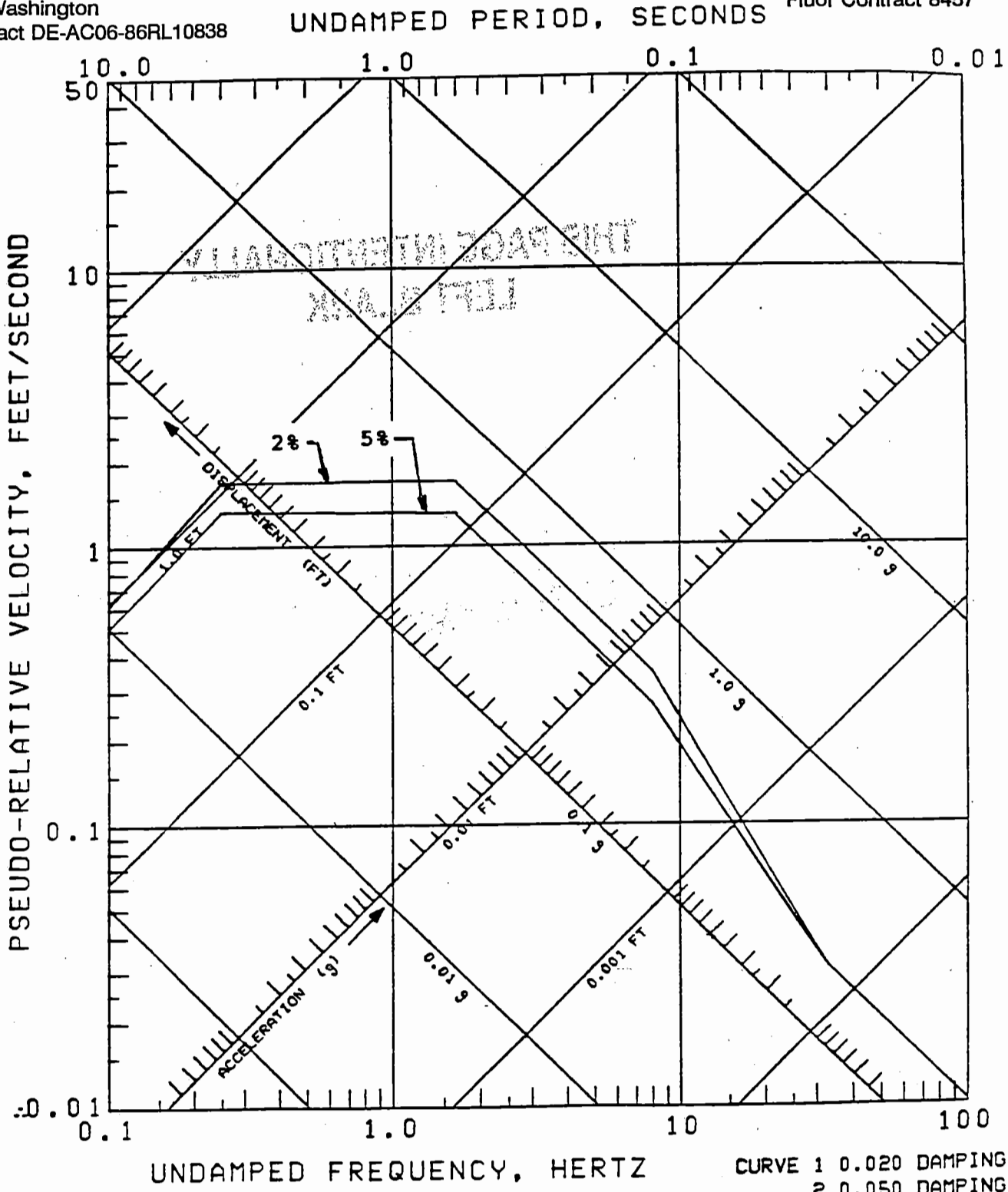

ATTACHMENT C

HWVP DBE RESPONSE SPECTRA

9 2 1 2 4 1 3 0 4 9 7

THIS PAGE INTENTIONALLY
LEFT BLANK

SECTION 15541
FIREWATER UNIT HEATER PUMP
(SAFETY CLASS 3)

PART 1 GENERAL

1.1 SUMMARY

This specification section covers the technical requirements for the design, fabrication, inspection, testing and installation of the process centrifugal pump unit. Pump unit consisting of pump, motor, coupling, unit base plate assembly, flexible coupling, and accessories required to make a complete centrifugal pump unit assembly with pump designation and quantities as listed below.

1.2 REFERENCES

The publications listed below form a part of this specification section to the extent referenced. The publications are referred to in the text by the basic designation only.

AMERICAN NATIONAL STANDARDS INSTITUTE (ANSI)

ANSI B16.1	1989 Cast Iron Pipe Flanges and Flanged Fittings

AMERICAN SOCIETY OF MECHANICAL ENGINEERS (ASME)

ASME Section I Division 1	1989 Boiler and Pressure Vessel Code
ASME Section IX	1989 Welding and Brazing

THE ANTI-FRICTION BEARING MANUFACTURERS ASSOCIATION (AFBMA)

AFBMA 9	1990 Load Ratings and Fatigue Life for Ball Bearings
AFBMA 11	1990 Load Ratings and Fatigue Life for Roller Bearings

FEDERAL STANDARDS (FED-STD)

FED-STD-595B	1989 Colors Used in Government Procurement

HYDRAULIC INSTITUTE STANDARDS FOR CENTRIFUGAL, ROTARY AND RECIPROCATING PUMPS (HI)

14TH EDITION 1983

NATIONAL ELECTRICAL MANUFACTURERS ASSOCIATION (NEMA)

NEMA ICS-6 1988 (Revision March 1989) Enclosures for Industrial Controls and Systems

NATIONAL FIRE PROTECTION ASSOCIATION, INC. (NFPA)

NFPA 70 1990 Edition - National Electric Code

OCCUPATIONAL AND SAFETY HEALTH ACT (OSHA)

OSHA 1-12.14 1978 Guards for Rotating Equipment

STEEL STRUCTURE PAINTING COUNCIL (SSPC)

SSPC-SP 6 1989 Commercial Blast

1.3 **RELATED REQUIREMENTS**

Specification Section 01730 Operation and Maintenance Data

Specification Section 16150 Motors - Induction

1.4 **DEFINITIONS**

CHECKOUT - Refers to the quality control functions required to ensure that all equipment is per specification and installed correctly, properly calibrated, functionally operational and ready for Buyer acceptance.

1.5 **SUBMITTALS**

Submit the following in accordance with the Vendor Drawing and Data Requirements section of the Order/Subcontract.

1.5.1 Drawings

1.5.1.1 Dimensional Outline Drawings - Certified dimensional outline drawings shall be provided and shall include dimensions, shipping and operating weights, and clearances which must be maintained. These drawings shall also show design and operating temperatures and pressures, size and location of all connections, lifting supports, materials of construction, corrosion allowance, baseframe details including the thickness of baseplate at foundation bolts,

anchor bolt locations and bolt hole diameter. Also, sectional drawings showing inside arrangement construction, and details for each component. Drawings shall include a detailed Bill of Materials listing manufacturer, type, and ratings of all component parts or assemblies. The pump discharge and suction nozzles allowable loads shall be furnished with these documents.

1.5.1.2 Electrical Wiring Diagrams - Electrical wiring diagrams shall depict external electrical connections provided by the Seller. Diagrams shall include all connections, schematics, interfaces, wire specifications and wiring to be supplied by the Seller and ratings in kVA for the fully installed pump drive motor.

1.5.2 Technical Data

1.5.2.1 Design Calculations - Engineering design analysis with supporting calculations used to establish connected horsepower requirements, shaft sizes, bearing loads, and operating characteristics. Calculations shall be complete and in sufficient detail to permit a second party review.

1.5.2.2 Descriptive literature including equipment ratings, model numbers, operating characteristics, and technical descriptions.

1.5.2.3 Data Sheets - Completed data as indicated in Attachment A.

1.5.2.4 Pump performance curves shall be provided for pump. Performance curves shall include pump brake horsepower, efficiency, NPSH required, viscosity and specific gravity corrections.

1.5.2.5 Factory Acceptance Tests (FATs) as defined in Paragraph 2.2.12.

1.5.3 Spare Parts List

A list of recommended spare parts for one (1) year's operation shall be supplied. The spare parts list shall include sufficient data to permit procurement from the original manufacturer or any subsupplier.

1.5.4 Installation, Operation, and Maintenance Manuals

Installation, operating and maintenance manuals shall be provided covering the firewater pump unit furnished in accordance with this specification. Manuals shall fully detail sequences of disassembly, repair, adjustment, reassembly, lubrication, and trouble-shooting. Trouble-shooting sections shall include fault trees to guide both mechanical and electrical diagnostics. Reduced size copies of those assembly, subassembly drawings and parts lists needed for routine maintenance and overhaul shall be included.

1.6 **PROJECT OR SITE ENVIRONMENTAL CONDITIONS**

1.6.1 Climatic and Geographic Site Conditions

A. Site Elevation 714 feet above sea level

B. Barometric Pressure 14.3 psia

C. Outside Design Temperature

1) Maximum Design Temperature 110°F

2) Minimum Design Temperature -20°F

3) Wet Bulb Design Temperature 68°F

D. Inside Design Temperature

1) Maximum Design Temperature 110°F

2) Minimum Design Temperature 50°F

3) Wet Bulb Design Temperature 68°F

1.6.2 The firewater heater pump is located inside a heated building.

PART 2 PRODUCTS

2.1 **MATERIALS AND EQUIPMENT**

2.1.1 General Requirements

The firewater heater pump assembly shall be furnished by a manufacturer normally engaged in the production of centrifugal pumps. Operating conditions and special requirements are specified in detail on the pump data sheet (Attachment A).

The pump shall have an impeller diameter such that at least a five percent increase in head at the rated capacity can be obtained by installing a larger diameter impeller of the same pattern.

The pump shall have a normal capacity point at or to the left of the best efficiency point on the head-capacity curve for the impeller diameter proposed and supplied.

The pump curve shall have the characteristic of continuously rising head with decreasing capacity from rated capacity to shutoff.

The pump shall be for continuous operation at the minimum capacity specified on the individual pump specifications data sheet DS-1 (Attachment A).

2.1.2 Baseplates and Supports

A fabricated steel drive base shall be furnished such that all equipment and auxiliary piping are located within its confines to maintain pump machinery alignment without grouting and during shipping.

Lifting lugs or other arrangements shall be provided for hoisting and handling the assembled unit during field erection.

A. Pump and motor support pads shall be machined flat and in the same plane within 0.002 inch per foot between pads.

B. Motor support pads shall be machined to provide a minimum of 3/16 inch shim height.

C. That portion of the drive base under the pump shall have a drain pan with raised lip construction with drain connection at the pump outboard end.

D. Shaft centerlines shall be of sufficient height above the baseplate to permit the piping of all auxiliary connections.

E. No component of the unit shall overhang the drained baseplate except the motor conduit box.

F. Baseplate shall have a minimum of four (4) mounting holes sized such that they are 3/16 inch larger than the anchor bolt size required.

G. Anchor bolts size shall be a minimum of 1/2 inch diameter.

2.1.3 Materials

Pump casing shall be cast iron. Internal parts shall be bronze fitted. Bearings, shafting, and seals shall be manufacturer's standards for service intended.

Castings shall be sound, free from shrink or blow holes, scale, blisters, and other defects. The surfaces shall be cleaned by manufacturer's standard methods. All casting burrs shall be filed or ground flush with the surface of the casting. The repair of leaks and defects in pressure casings by the use of plastic or cement compounds is not acceptable.

2.2 FABRICATION AND MANUFACTURE

2.2.1 General Requirements

The pump operating point shall be within 10 percent to the peak efficiency on the pump performance curve. At design conditions and at maximum horsepower along the pump curve, the horsepower requirements shall not exceed the nominal rating of the motor as shown on the nameplate (excluding service factor).

All rotating parts of the assembled equipment shall operate and comply with the Hydraulic Institute Standards for Centrifugal, Rotary and Reciprocating Pumps (HI).

The equipment shall operate throughout the required range without excessive vibration as defined in Paragraph 2.2.6, thrust, or noise.

2.2.2 Pump Casing

Pump casings shall be designed for the maximum discharge pressure at pumping temperature and hydrostatic test pressure at ambient temperature using Class 125 pound flat face flanges in accordance with ANSI B16.1. The pump must come with a casing vent.

Design stress, temperature restrictions and physical properties for all pump materials shall be consistent with those limitations for similar materials as given in Section I, Division 1 of the ASME Code. Pressure containing parts shall be built in accordance with Section I, Division 1 of the ASME Code and with Section IX of the ASME Code. Code stamp and data report forms are not required.

2.2.3 Seals

Seals shall be of mechanical type and specifically designed for centrifugal pump service.

Seal flush shall be as noted on the pump data sheet as described in Attachment A.

2.2.4 Bearings

Bearings shall be grease lubricated and sized to take the thrust loads of 150 percent of rated capacity at maximum speed according to AFBMA. The life for antifriction bearings specified therein shall be L-10 of 100,000 hours service life calculated in accordance with AFBMA-9 and AFBMA-11.

9 2 1 2 4 1 3 0 5 0 3

2.2.5 Vibration

Peak-to-peak vibration limits shall apply to all pumps. These limits shall cover rotor vibration during shop and field tests at rated speed and throughout the full operating capacity. Peak-to-peak limits measured on the shaft are:

Speed (rpm)	Anti-Friction Bearings[1]
1800 and below	mils 1.5

[1] Measured on bearing housing

2.2.6 Coupling

Seller shall mount pump and motor half couplings. Coupling shall be rated for a minimum of 150 percent of motor nameplate horsepower at 1750 rpm. All metal flexible coupling shall be keyed to both shafts.

2.2.7 Safety Guarding

All safety guards, color coding, signs, and accessibility, etc., shall comply with OSHA requirements. Safety guards shall be designed such that the equipment being guarded is easily accessible for maintenance.

2.2.8 Electrical Design Requirements

The electrical motor shall be provided in accordance with NFPA 70 standards and this specification section. The controller for the motor shall comply with NEMA ICS-6.

For a description of the firewater heater pump controls, see Specification Section 17801 LP-500-007.

2.2.9 Motor

Motors shall be integral, 1800 RPM, foot mounted, totally enclosed fan cooled (TEFC), squirrel-cage, induction type having normal starting and breakdown torque according to Specification Section 16150. Motors for centrifugal pumps shall have nameplates showing horsepower ratings, not including service factor and at least equal to the following percentage of pump rated brake horsepower:

Motor Nameplate Ratings	Percent of Rated Brake Horsepower
25 HP and less	125
30 HP to 75 HP	115
100 HP and Over	110

Motors shall be provided in accordance with Specification Section 16150 and be sized for pump brake horsepower at any point on the head capacity pump curve without exceeding motor horsepower rating including service factor.

2.2.10 Coatings

After completion of all fabrication procedures, the external metal surfaces of the pump assembly shall be thoroughly cleaned by the removal of all water, sand, grit, weld splatter, grease, oil and foreign materials. Equipment shall be painted. Electrical motor and centrifugal pump shall be painted in accordance with manufacturer's standard. Unless specified otherwise, stainless steel, nickel, brass, copper, monel, aluminum, hastelloy, lead, galvanized steel, plastics, elastomers, or glass surfaces shall not be painted. Other components, such as baseplate, support framing, and controller cabinet shall be cleaned, primed and finish coated per the manufacturer's standard with the following as minimum:

A. Cleaning preparation per SSPC-SP 6.

B. Primer coat within 10 hours of completing cleaning procedures, minimum 0.5 mils dry film thickness.

C. First top coat to be compatible with above primer coat and applied after thorough mixing in accordance with coating manufacturer's instructions. Minimum 1.5 mils dry film thickness. Color: medium shade of red.

D. Finish top coat to be compatible with first top coat and applied after thorough mixing in accordance with coating manufacturer's instructions. Minimum 1.5 mils dry film thickness. Color: Federal Standard 595B, Chip 21105 red.

Total minimum coating thickness shall be 3.5 mils.

2.2.11 Welding

All pump assembly welding requirements shall be to industry standard practice.

After welding, all weld spatter and flux shall be removed by suitable means such as wire brushing and/or needle scaling.

All sharp edges and corners shall be removed.

2.2.12 Factory Acceptance Tests (FATs)

A. The Seller shall shop test the unit to verify pump performance. A detailed shop testing procedure shall be submitted prior to testing for review and approval. The Buyer shall be notified in advance of all (FATs) and reserves the right to witness all tests.

B. Pump shall be tested at the factory to provide detailed performance data and demonstrate its compliance with specifications. The pump shall be hydrostatically tested for a period of time not less than 30 minutes. The test pressure shall be not less than one and one-half times the head capabilities of the maximum diameter impeller for the casing at shutoff, plus the pump maximum allowable suction head but in no case less than 250 psi. Pump casing shall be tight at the test pressure. During the test, no visible leakage shall occur at any joint.

C. Seller shall furnish certified test curves showing head-capacity, efficiency, and brake horsepower of the pump.

2.3 **LABELING**

In addition to the manufacturer's identification plate, pump and motor shall be supplied with a stainless steel tag containing the equipment name and equipment number Fire Water Heater Pump PX-500-003. Each tag shall be permanently affixed.

Corrosion resistant metal identification plate shall be permanently attached to pump (not on baseplate) and contain not less than the following information using specified units:

Manufacturer's name
Serial number of pump
Size and type of pump
Rated capacity
Pumping head
Specific gravity
Revolutions per minute
Maximum allowable casing working pressure at maximum pumping temperature

Pump shall be provided with a cast in or permanently attached direction of rotation arrow located on drive end of the pump.

2.4 **PACKAGING**

Preparation for shipment and packing may conform to the Seller's standards and as a minimum shall provide protection against corrosion and damage during normal handling, shipping, and storage. Minimum preparation shall include the requirements listed below.

2.4.1 Machined surfaces, threads, bearings and bearing housings shall be protected during shipment by application of grease or other rust inhibiting compound.

2.4.2 Flanged openings shall be covered with metal, wood or plastic protectors. When metallic protectors are used, a nonmetallic gasket shall be installed between the flange and protector. Protectors shall be installed with a minimum of four (4) full diameter steel bolts and nuts.

2.4.3 Threaded connections and tapped holes shall be capped or plugged using compatible materials to prevent thread damage.

2.4.4 Firewater heater pump unit assembly shall be shipped fully assembled on baseplate.

2.4.5 The controller shall be shipped separately and field wired to the pump assembly from the remote location.

2.4.6 Bracing, supports, and rigging connections shall be provided to prevent damage during shipment, lifting, and unloading.

2.4.7 Separate or loose parts shall be completely boxed and attached to the main item to be shipped as a unit. All shipping boxes shall be identified by the Seller's order number, equipment number, and equipment description in ink, paint, or other indelible material.

PART 3 EXECUTION

3.1 **PREPARATION**

3.1.1 Inspection Before Installation

Inspect each piece of equipment to make sure it is complete with all accessories and is undamaged.

3.1.2 Prior to installation all equipment shipping braces, supports, packing, pipe caps, flange protecting devices, and moisture absorbent material shall be removed. Equipment shall be thoroughly cleaned and all protective greases and rust inhibiting compounds removed.

9 2 1 2 4 1 3 0 5 0 7

3.2 **INSTALLATION, APPLICATION AND ERECTION**

3.2.1 Install and secure pump in accordance with the manufacturer's instructions, this specification, and the Contract Drawings.

3.2.2 Lubricate equipment only as recommended by the maintenance instructions and the Contract Drawings.

3.2.3 Align and assemble pump discharge head, motor and pump within the tolerances recommended by the pump manufacturer. Piping shall then be installed and the alignment shall be checked to ensure piping installation meets installation recommendations.

3.2.4 To ensure protection from the environment, the Seller shall paint or coat each piece of equipment where coating has been damaged with matching paint and/or coating system as originally applied.

3.2.5 Inspection and Checkout, After Installation

The Seller shall perform inspection and checkout of centrifugal pump unit assembly to assure compliance with this specification and Contract Drawings. After inspection and checkout has been completed, the Seller shall prepare and submit a checklist indicating that the minimum requirements listed below have been successfully accomplished:

A. Verify that pump and motor assembly is undamaged, clean, and free of foreign material.

B. Verify that the equipment bearings are lubricated in accordance with manufacturer's recommendations.

C. Verify pump and motor alignment and freedom of rotation.

D. Verify that pipe connections and fasteners are secure and have been properly made in accordance with the manufacturer's instructions and the Contract Drawings.

3.3 **FIELD QUALITY CONTROL**

Inspection and examination to be in accordance with Paragraph 3.2.5.

END OF SECTION

9 2 1 2 4 1 3 0 5 0 8

THIS PAGE INTENTIONALLY
LEFT BLANK

ATTACHMENT A

FLUOR DANIEL
EQUIPMENT SPECIFICATIONS

U. S. Department of Energy
Hanford Waste Vitrification Plant
Richland, Washington
DOE Contract DE-AC06-86RL10838

CENTRIFUGAL PUMPS

DS - 1

NO.	BY / DATE	REVISION

SHEET NO.	REV.
1	0
DATE 07-23-91	CONTRACT 845734
MANUFACTURER	
FLUOR P.O.	
JJI	CHK'D CD / APPR'D

ALL ITEMS SHALL COMPLY WITH GENERAL SPECIFICATION SHEETS: A160-15541

GENERAL

Service: FIRE PROT-FIRE WATER UNIT HTR PUMP
Pump Mfr.:
Size & Type:
No. Stages:
Serial No.:

No. Motor Driven: 1
Pump Tag No.: PX-500-003
Motor Tag No.: SAME
Motor Provided By: PUMP MFR.
Motor Mounted By: PUMP MFR

No. Pumps Req.: 1
No. Turbine Driven:
Pump Tag No.:
Turbine Tag No.:
Turbine Provided By:
Turbine Mounted By:

LIQUID

Name: WATER
Pumping Temperature (°F): Normal 60 Max. 80 Min. 45
Specific Gravity: @ 60 °F = 1.00
Vapor Press. (PSIA): 0.256
Viscosity (CP): @ 60 °F = 1.129
Corrosion/Erosion Caused By: NONE
Remarks: CONTINUOUS OPERATION

OPERATING CONDITIONS

Capacity (U.S. GPM): Normal 9.1 Rated 10
Discharge Pressure (PSIG): 21
Suction Pressure (PSIG): Max. Rated 11
Differential Pressure (PSI): 10
Differential Head (Feet): 23.1
NPSH Available (Feet): ~56
Hydraulic Power (HP): 0.10

SITE CONDITIONS

Temp. (°F): Max. 110 Min. 50
Rel. Humid. (%): Max. 100 Min. 10
Altitude (Feet):
⊗ Indoor ⊗ Heated ○ Roof
○ Outdoor ○ Unheated ○ Sun
Area Classification: 3
Other:
Remarks:

PERFORMANCE (To Be Completed By Manufacturer)

Proposal Curve No.:
Speed (RPM):
Efficiency (%):
Rated Power (BHP):

Minimum Continuous Flow (GPM): Thermal Stable
Max. Head Rated Imp. (Feet):
Max. Power Rated Imp. (BHP):

NPSH Required (Feet Water): 3% Head Drop
Suction Specified Speed:

CONSTRUCTION (To Be Completed By Purchaser and Manufacturer)

NOZZLES	SIZE	RATING	FACING	LOCATION
Suction	1 1/2	150	R.F.	
Discharge	1	150	R.F.	

MISC. CONNECTIONS	SIZE	TYPE
Drain		
Vent		
Pressure Gage		
Warm Up		
Balance Line		

Casing Mount: ☒ Foot ☐ Bracket
Centerline ☐ Near Cntrl. ☐ Inline
Casing Split: ☐ Axial ☒ Radial
Casing Type: ☐ Diffuser ☐ Staggered
☒ Single Volute ☐ Double Volute
Max. Allowable Pressure (PSIG):
At 60 °F
At Norm. Pump Temp.
Hydro Test Pressure (PSIG):
Lubrication Type: ☐ API 614
☒ Grease ☐ Ring Oil ☐ Oil Mist
☐ Flood ☐ Flinger ☐ Pressure
Remarks:

Impeller Diameter (Inches)
Rated Max. Min.
Impeller Type: ☒ Open ☐ Closed
Imp. Suction: ☒ Single ☐ Double
Imp. Mount: ☐ Btwn. Brgs ☒ Overhung
Rotation (Coupling End): ☐ CW ☐ CCW
Bearing (Type/Number):
Radial
Thrust
Coupling:
Manufacturer
Type/Model
Driver Half-Coupling Mounted By:
⊗ Pump Mfr. ○ Driver Mfr. ○ Purchaser

Packing:
Manufacturer
Type
Size/No. Rings
Mechanical Seal:
API Class Code X
Manufacturer
Model
Mfr. Code
○ Cartridge Type Required
Gland Type/Mat'l.:
Gland Plate Taps Required for:
○ Quench ⊗ Flush ○ Drain ○ Vent

○ = By Purchaser ☐ = By Mfr./ Purchaser

9212130509

THIS PAGE INTENTIONALLY
LEFT BLANK

SECTION 16100
ELECTRICAL INSTALLATION
(SAFETY CLASS 3, RATED FOR SAFETY CLASS 1 DBE)

PART 1 GENERAL

1.1 SUMMARY

1.1.1 Furnish all labor, material, tools, and equipment necessary to perform installation of electrical equipment and systems for the mechanical site utilities as shown on the Contract Drawings and in accordance with the requirements of this section.

1.1.2 Seller shall be responsible for field routing and/or matching of equipment wiring and conduit to components where not specifically defined on the Contract Drawings.

1.1.3 Seller shall provide and install locknuts, union fittings, conduit extensions, reducers, etc. as required to connect equipment.

1.1.4 Dimensional tolerance shall be ±1 inch unless otherwise specified on the Contract Drawings.

1.2 REFERENCES

The publications listed below form a part of this specification to the extent referenced. The publications are referred to in the text by the basic designation only.

NATIONAL FIRE PROTECTION ASSOCIATION (NFPA)

NFPA 70 1990 National Electrical Code (NEC)

1.3 RELATED REQUIREMENTS

Specification Section 13120 Building Accessories (Sealants)

Specification Section 16110 Electrical Materials and Devices

Specification Section 16111 Conduit/Cable Schedule

Specification Section 16905 Electrical Testing

1.4 SUBMITTALS

Submit the following in accordance with the Vendor Drawing and Data Requirements section of the Order/Subcontract.

1.4.1 Submit manufacturer's instructions for installation of items identified in this specification and as shown on the Contract

Drawings. Manufacturer's instructions shall include connection diagrams and additional procedures for equipment storage, handling, protection, examination, preparation and start-up.

1.5 **PROJECT OR SITE ENVIRONMENTAL CONDITIONS**

1.5.1 Climatic and Geographic Site Conditions

A. Site Elevation 714 feet above sea level

B. Barometric Pressure 14.3 psia

C. Outside Design Temperature

1) Maximum Design Temperature 110°F

2) Minimum Design Temperature -20°F

1.5.2 Operating Environment

A. Normal Temperature -20° to 110°F

PART 2 PRODUCTS

2.1 **MATERIALS AND/OR EQUIPMENT**

Furnish all materials and equipment required to perform installation work in accordance with the Contract Drawings and specifications.

PART 3 EXECUTION

3.1 **INSTALLATION, APPLICATION AND ERECTION**

3.1.1 Equipment and materials shall be installed in accordance with the Contract Drawings and manufacturer's instructions furnished with equipment and materials. Installation shall conform to NFPA 70.

3.1.2 Fastenings

3.1.2.1 Unless noted otherwise on Contract Drawings, fastenings to steel shall be by means of machine screws, bolts or certified and/or Buyer approved welding method. The overall strength of fastening by any method for branch circuit panelboards DA-32A-851, 852, 853 dry-type transformers XT-32A-801, 802, 213 shall be at least equal to four 3/8 inch diameter A-307 bolts. No wood or fiber plugs shall be permitted. Fastenings to concrete shall be accomplished with expansion anchors or bolts.

9212413051 1

3.1.2.2 Seller shall drill, tap, or weld to structural steel as required to mount equipment and material.

3.1.2.3 Seller shall supply and install electrical supports where structural supports cannot be used or are not available.

3.1.3 Conduit Supports and Equipment Racks.

3.1.3.1 Conduit supports and equipment racks shall be furnished and installed by the Seller as shown on the Contract Drawings and/or as specified in applicable paragraphs of this section. Conduit supports shall be spaced in accordance with Paragraph 3.1.6.10.

3.1.4 Openings, Penetrations, and Inserts

3.1.4.1 The Seller shall provide all openings required for his work except for those openings identified specifically as existing on the Contract Drawings.

3.1.4.2 The Seller shall seal all penetrations passing through floors, fire rated walls and where specified on the Contract Drawings in accordance with the Contract Drawings and Specification Section 13120.

3.1.5 Grounding

3.1.5.1 The grounding of electrical equipment, grounded electrical circuits, etc., shall be in accordance with the Contract Drawings. In addition to the grounding specified herein or on the Contract Drawings, all ground connections required by the National Electrical Code shall be furnished and installed. Where grounding conductor sizes are omitted from the Contract Drawings, the minimum requirements of the National Electrical Code shall apply.

3.1.5.2 The enclosing cases, mounting frames, etc., of all switches, circuit breakers, control panels, motors and other electrical equipment shall be grounded by a grounding conductor from a ground bus established at the source of supply to the equipment to be grounded. This grounding conductor shall be run inside the raceway enclosing the power conductors supplying the equipment. When equipment power conductors are supplied by a multi-conductor cable, a grounding conductor shall be included in the cable.

3.1.5.3 Grounding conductor shall be copper except for ground path external to buildings which shall be 5/8 inch diameter low carbon grade steel. Routing shall be as shown on the Contract Drawings.

3.1.5.4 Equipment grounding conductors shall connect to the related equipment ground bus (if provided) or equipment frame/enclosure.

3.1.5.5 Before connections are made, all contact surfaces shall be clean of grease, dirt and debris. Apply an anti-oxidizing compound to clean contact surfaces for pressure or clamp-on type ground connections.

3.1.5.6 All exothermic weld connections shall be made by the CADWELD Process or equal. Connections shall include but not be limited to, all cable to cable splices, tees, X's, etc., all cable to ground rods, ground rod splices, cable to steel or cast iron and cable lug terminations as shown on Contract Drawings.

3.1.5.7 Nonelectrical equipment, such as structural steel supports, shall be grounded in accordance with the Contract Drawings.

3.1.5.8 Instrument Cable Shields

3.1.5.8.1 Instrument cable shields shall be grounded at one end only.

3.1.5.8.2 Shield grounding of instrument signal (mA, mV) conductors shall be electrically and mechanically isolated from all other grounding conductors or grounded surfaces.

Ground buses shown as "instrument" on Contract Drawings shall be the only ground buses on which instrument ground conductors may be terminated.

3.1.5.9 Lighting Fixture Enclosure Grounding

An insulated continuous ground conductor shall be run in the same conduit as the circuit conductors and attached to the metal enclosure of each lighting fixture and related local switch box.

3.1.6 Raceways

3.1.6.1 Minimum conduit size shall be 3/4 inch exposed, or embedded in walls or floor slabs.

3.1.6.2 Above ground conduit shall be intermediate grade conduit (IMC) unless noted otherwise on drawings. Maximum IMC size shall be 4 inches.

3.1.6.3 Conduits installed below grade shall be polyvinyl chloride (PVC).

3.1.6.4 Flexible connections shall be three feet or shorter except as noted on the Contract Drawings and of the same size as the feeder conduit. Liquid-tight flexible conduit shall be used for final connections to all motors, field instruments and control panels.

Sufficient slack shall be provided to allow for potential seismic motion.

3.1.6.5 Conduit shall in no case be secured directly to piping. Conduit parallel to or crossing uninsulated hot water or steam pipes must be separated from them by 12 inches if parallel or 6 inches if crossing. Conduit parallel to or crossing insulated water lines must clear the insulation surface of the water lines and shall be separated from them in either direction by at least 3 inches.

3.1.6.6 Intermediate metal conduit shall be cut square with a conduit cutter and threaded with a conduit threader. The ends shall be reamed of burrs and all metal shavings and cutting lubricants shall be removed before the conduit is connected to the conduit system.

3.1.6.7 Bends, offsets and bevels shall be avoided where practical; but where they are necessary, they shall be made with a bending device. In no case shall the radius of any conduit bend be less than that specified in the National Electrical Code or less than the allowable bending radius of the installed conductors. Any conduit crushed or deformed in bending will be rejected. Concentric bends are not required; however, the Seller shall maintain identical spacing between adjacent conduit runs both at the beginning and after the bend.

3.1.6.8 Intermediate metal conduit whether concealed or exposed, shall be adequately supported in accordance with Section 345-12 of the National Electrical Code and the Contract Drawings.

3.1.6.9 Conduit shall be secured to walls, building framing, etc. by the use of malleable iron galvanized U bolts, conduit clamps, conduit straps or channel fittings where channel racks or supports are used. Conduit support hardware shall be installed per manufacturer's instructions and shall be tightened to the steel to provide maximum clamping action. Conduit shall be securely fastened to all outlet boxes with double locknuts and insulating bushings unless boxes with conduit hubs are provided.

3.1.6.10 Supports shall be erected square, and true to line and grade, with a spacing of one support for every 10 feet of conduit length. Also, one support shall be provided within 3 feet of each conduit terminal fitting or box, except where details on the Contract Drawings define closer spacing.

3.1.6.11 Conduit connections shall be made with appropriate fittings and securely tightened. Improperly made connections or terminations, as well as any which have not been tightened, will be rejected.

3.1.6.12 Conduit openings into which dirt, plaster, mortar mix or debris may fall shall be closed with caps or tight-fitting plugs during

the construction period. Conduits in which such material has accumulated shall be thoroughly cleaned. Where such accumulations cannot be readily removed, the conduit shall be replaced.

3.1.6.13 Liquid-tight flexible metal conduit assemblies shall be used between motor terminal boxes, transformers, generators and other equipment subject to vibration and/or mechanical adjustment and the rigid conduit systems or elsewhere as shown on the Contract Drawings. Liquid-tight conduit used to connect to motor terminal boxes for housing motor conductors shall be not less than twelve inches in length.

3.1.6.14 Vertical drops to equipment in open spaces shall be supported from the equipment foundation as shown on the Contract Drawings and/or as required by the National Electrical Code. Supporting of conduit from equipment is not allowed.

3.1.6.15 When not shown in detail on the Contract Drawings or when installation interference exists, the exact locations and routing of conduit shall be determined by the Seller and approved by the Buyer.

3.1.6.16 Spacing between parallel conduit runs of different services shall be maintained as indicated below:

	Analog Signal <50V and Digital	Analog Signal >50V
120V	12"	9"
480V	12"	9"

3.1.6.17 Fittings on conduit systems having threaded connections shall be made up tight, with full thread engagement, and with a minimum of wrench work in order to avoid wrench cuts. Running threads and slip joints are not permitted. Joints shall provide structure rigidity and low electrical resistance across the joints. Metallic conduit run into metal boxes without threaded hubs shall have locknut outside and a locknut and bushing inside per connection unless otherwise shown on the Contract Drawings. All open conduit ends shall have bushings unless other terminations are shown on the Contract Drawings.

3.1.6.18 Polyvinyl chloride (PVC) conduit shall be joined using PVC conduit couplings and a solvent cement specifically recommended by the manufacturer.

3.1.6.19 All parts of the conduit system shall be protected against damage during construction. Conduits shall be securely fixed in position to avoid displacement due to other construction activities, and Seller shall maintain conduits in their required positions until the work is accepted.

3.1.6.20 Before making up conduit runs, the interiors of all conduit, conduit bends and fittings shall be inspected and cleaned of all dirt, cuttings and other foreign material.

3.1.6.21 Unused knockouts shall remain closed or shall be sealed with knockout closures.

3.1.6.22 A No. 12 insulated copper fish wire (or 240 pound tensile strength polypropylene pull line) shall be installed in all conduits for which conductors are not installed by the Seller. A 10 inch length of the fish wire (pull line) shall extend out of each end of all conduits.

3.1.7 Wire and Cable

3.1.7.1 Wire and cable shall not be pulled until the raceway system is complete from pull point to pull point.

3.1.7.2 Care shall be exercised while installing wire in conduits so as not to damage the conductor insulation. Wire pulling compounds may be used in pulling conductors and shall be used if wire is pulled by mechanical means.

3.1.7.3 Wire and cable as it is pulled, shall be visually inspected by the Seller. If any abrasions, abnormalities, lumps or irregularities are found, the Seller shall suspend pulling and report the cable's condition to the Buyer.

3.1.7.4 Lighting and power circuits required for construction shall be installed in a safe manner and removed when the work is complete.

3.1.7.5 Suitable mandrel and swab shall be pulled through conduit prior to pulling cable into conduit. Lubricant may be blown into conduits to facilitate pulling of cables, but grease or other materials harmful to insulation shall not be used.

3.1.7.6 Pulling tension shall be monitored by a tension dynamometer or similar device whenever a mechanical or electrical wire puller is used. If pulling tensions exceed values recommended by cable manufacturer, Seller shall suspend pulling until further procedure has been approved by the Buyer.

3.1.7.7 Terminations shall generally be made using compression type lugs for all conductors other than for lighting circuits, where the wire shall be formed to the terminal connection. Connections at motor leads, transformers, and other similar connections to insulated leads or busses, shall be covered and taped in a manner appropriate to the class of insulation originally on the conductor, with the taping extended over the terminal connector fitting and the terminal of the device to which the conductor attaches.

3.1.7.8 At panels and other enclosures, an allowance shall be made in conductor length to permit forming the conductors neatly within the enclosures. Where wiring troughs are not provided with the enclosures, the wiring shall be neatly cabled and adequately supported.

3.1.7.9 Power and control conductors shall be rung out before connections are made at terminals. Polarity, phasing and rotation shall be checked and changes made as required before terminal connections are made.

3.1.7.10 Control, alarm, and indication conductor terminations shall be made in accordance with Contract Drawings.

3.1.7.11 Splices in power and control conductors shall not be permitted except where specifically indicated on the Contract Drawings or authorized in writing by Buyer. Splices shall be made by the Seller for each type of wire in accordance with instructions issued by wire manufacturer.

3.1.7.12 On splices and taps the tape applied directly over the connector shall be wrapped as tight as possible in a manner so as to pad the sharp edges and fill the indents of the connector. The outer tape shall be applied until the total area of the initial taping is covered with a minimum of four layers. The total thickness of the combination of tapes shall be at least equal to the thickness of the conductor insulation.

3.1.7.13 Conductors shall be pulled into conduits in such manner as to avoid sharply bending or kinking conductor, damaging or stressing insulation. <u>Minimum cable bending radius shall not be smaller than that specified by the manufacturer.</u>

3.1.7.14 Shields and drain wires shall be terminated (grounded) as shown on the Contract Drawings. Field end of shield and drain wire shall be insulated per details on the Contract Drawings to prevent accidental grounding.

3.1.7.15 Color Coding

3.1.7.15.1 Grounded (neutral) conductors No. 2 AWG and smaller shall have pigmented insulation. Grounded conductors larger than No. 2 AWG

9212413051 7

shall be identified at all terminals or junction points by wrapping with self-adhesive, vinyl plastic electrical tape. Color coding shall be as described below. Sufficient length of cable nearest terminal or junction point shall be easily identifiable when covers of lighting panels, transformers, junction boxes, safety switches, etc., are removed.

3.1.7.15.2 Conductors for 480/277 volt three phase systems shall be color coded (pigmented insulation) as follows: Phase A (Brown), Phase B (Orange), Phase C (Yellow), Grounded Neutral (Gray), Grounding Conductor (Green).

3.1.7.15.3 Conductors for 208/120 volt three phase systems shall be color coded (pigmented insulation) as follows: Phase A (Black), Phase B (Red), Phase C (Blue), Grounded Neutral (White), Grounding Conductor (Green).

3.1.7.15.4 Conductors for 240/120 volt single phase systems shall be color coded (pigmented insulation) as follows: Ungrounded conductor (Red), Ungrounded Conductor (Black), Grounded Neutral (White), Grounding Conductor (Green).

3.1.7.15.5 Lighting fixture conductors shall be color coded as follows: Phase Conductors (Black insulation or white braid insulation with black tracer), Grounded Conductor (White braid insulation or white).

3.1.7.15.6 Any insulated conductor intended solely for grounding purposes shall be identified by a continuous green color.

3.1.7.16 Splices, Taps, and Connectors

3.1.7.16.1 Splices and taps shall be made in junction boxes, wireways, and other National Electrical Code approved enclosures.

3.1.7.16.2 Compression connectors shall be installed in strict accordance with manufacturer's instructions, using properly sized and keyed connectors and dies.

3.1.8 Lighting System

3.1.8.1 Fixtures

3.1.8.1.1 Lighting fixtures shall be installed at locations shown on the Contract Drawings. Fixture mounting shall be in accordance with the manufacturer's instructions or as detailed on the Contract Drawings and specifications.

3.1.8.1.2 Rows of fixtures shall be installed accurately as to line and level. Fastenings and supports shall be set so that the fixtures will not be distorted by handling during normal maintenance. All

parts including lamps shall be secured to prevent falling or dislocation.

3.1.8.2 Device and Utility Boxes

3.1.8.2.1 Device and utility boxes concealed in the non-concrete construction shall be firmly secured in place, set true, square and flush with the finished surfaces for the application of the appropriate cover plate.

3.1.8.2.2 Unless shown otherwise on the Contract Drawings, outlets shall be located as listed below with measurements taken to the bottom of outlets.

A. Receptacles - 42 inches from floor.

B. Switches - 42 inches from floor.

3.1.8.2.3 Plug receptacle boxes shall be mounted vertically, unless otherwise noted on the Contract Drawings.

3.1.8.2.4 Junction boxes, pullboxes and conduit fittings as required by the National Electrical Code or where required to facilitate spreading and/or pulling conductors (either feeders or branch circuits) shall be furnished regardless of whether shown on the Contract Drawings or not. Seller shall identify box sizes on "as-built" Contract Drawings.

3.1.8.2.5 Boxes shall be rigidly secured in position to building structures. Boxes, except on unfinished ceiling and walls, shall be set so that the front of each of the boxes or covers shall be flush with the finished wall or ceiling line, or not more than 1/4 inch back of same.

3.1.9 Identification

3.1.9.1 Equipment

3.1.9.1.1 Disconnect switches, terminal cabinets, circuit breakers, combination motor controllers, 480V power receptacles, and other similar electrical equipment shall be identified by means of phenolic laminated nameplates. The nameplate inscription shall include the equipment number as a minimum and shall be in accordance with the Contract Drawings or equipment specification. Nameplates shall be in accordance with Specification Section 16110.

3.1.9.1.2 Cardholders and directory cards shall be provided for circuit identification in panelboards. List of circuits shall be typewritten. Circuit description shall include equipment (or areas) served and/or location of equipment as described in Panel Schedules listed on the Contract Drawings.

9212413051 9

3.1.9.2 Cables

3.1.9.2.1 Cables shall be identified by color in accordance with Paragraph 3.1.7.15, by surface marked cable type in accordance with Specification Section 16110, and by cable numbers in accordance with Specification Section 16111 applied with heat shrinkable plastic.

3.1.9.2.2 Cable numbers shall be applied at each cable termination and inside terminal enclosures where present.

3.1.9.3 Conduits

3.1.9.3.1 Conduits listed on the conduit schedules shall be identified with self-adhesive vinyl cloth in accordance with Specification Section 16110.

3.1.9.3.2 The conduits shall be identified at the switchgear, entry and exit points of all junction or pullboxes, on both sides of any walls or floors which conduits penetrate and at equipment in which they terminate.

3.1.9.4 Junction and Pull Boxes

Identification number, where indicated on the Contract Drawings, shall be stencilled on the box cover and box side. Inscription shall be as indicated on the Contract Drawings.

3.1.10 Heat Tracing

3.1.10.1 Installation shall be in accordance with the manufacturer's instructions, the Contract Drawings and the requirements included in this specification.

3.1.10.2 The surface on which the heater cable is to be installed shall be wiped clean of any loose foreign material (scale, rust, dirt, etc.).

3.1.10.3 Heater cable shall be secured to the pipe with glass or aluminum tape as indicated on the Contract Drawings.

3.1.10.4 Power connection to the heater cable shall be made with connection kit supplied with heater cable.

3.1.10.5 Control and monitoring thermocouples shall be installed as indicated on the Contract Drawings.

3.1.11 Combination Motor Controllers

3.1.11.1 Location and method of securing equipment shall be done in accordance with manufacturer's instructions and approved drawings, equipment specification and the Contract Drawings.

9 2 1 2 4 1 3 0 5 2 0

3.1.11.2 Combination motor controllers shall be carefully assembled from shipped parts and accurately positioned, leveled, and anchored in place. Shims shall be installed as required in leveling to prevent stress or distortion in the equipment.

3.1.11.3 Interconnections, including power, control and ground buses, and interpanel wiring, shall be carefully remade and insulated as required. Bolted or clamped joints shall be drawn up to torque values defined by manufacturer.

3.1.11.4 Combination motor controllers shall be either welded or bolted to the structural support systems as indicated on the Contract Drawings.

3.1.12 Dry-Type Transformer

3.1.12.1 Transformers shall be mounted as indicated on the Contract Drawings. Location and method of securing transformers shall be done in accordance with this specification, manufacturer's instructions and approved drawings, equipment specification and Contract Drawings.

3.1.12.2 Power, ground, and neutral connections shall be made in accordance with manufacturer's instructions. Bolt-on clamped joints shall be drawn up to torque values defined by the manufacturer.

3.1.13 Panelboards

3.1.13.1 Panelboard assemblies shall be installed with the position of the highest device 6-1/2 feet (maximum) above the floor. See Contract Drawings for mounting. Cabinets shall have fronts straight and plumb.

3.1.13.2 Panelboards shall be factory assembled and tested.

3.1.14 Terminal Cabinets

Location and method of securing terminal cabinets shall be in accordance with this specification, manufacturer's instructions and Contract Drawings.

3.1.15 Underground Duct Bank

3.1.15.1 Underground duct banks shall consists of Schedule 80 PVC conduit encased in concrete as shown on the Contract Drawings. Slope conduits to manholes with a grade of 3 inches per 100 feet. Adjust final slopes on site to coordinate with other utilities. Joints in conduit shall be water-tight.

3.1.15.2 Minimum depth for duct banks shall be 2'-6" except as noted on the Contract Drawings.

9212413052 1

3.1.15.3 Terminate conduits with bell ends, flush with the inside wall of the manhole.

3.1.15.4 Clean duct before installing. Plug conduit ends to prevent entry of dirt, concrete, mud and other foreign material during construction.

3.1.15.5 Changes in direction of duct exceeding 10 degrees shall be accomplished with long-radius bends having a minimum radius of 25 feet. Long-radius manufactured bends may be used at the ends of runs shorter than 100 feet.

3.1.15.6 Stagger duct joints in concrete encasement a minimum of 6 inches.

3.1.15.7 After underground conduit runs have been completed, pull a test mandrel and wire brush through each conduit to check alignment and remove foreign matter.

3.1.16 Precast Manholes and Pull Boxes

3.1.16.1 Install manholes and pull boxes in accordance with manufacturer's recommendations and as shown on the Contract Drawings.

3.1.16.2 Seal joints between manhole sections, using plastic sealing compound in conformance with manufacturer's recommendations.

3.2 **FIELD QUALITY CONTROL**

Electrical materials and equipment shall be inspected and tested in accordance with Specification Section 16905, Electrical Testing.

3.3 **CLEANING**

3.3.1 Clean and remove all debris, excess material and equipment from the job site after completion of installation.

3.3.2 Clean electrical parts to remove conductive and deleterious materials. Remove dirt and debris from enclosures and fixtures.

3.3.3 Clean and repair galvanized surfaces damaged during preparation, welding or installation with a galvanizing compound in accordance with manufacturer's instructions.

3.4 **PROTECTION**

During installation operations, protect from damage all existing facilities, equipment and materials. Existing facilities, equipment or materials which are damaged during the installation operations, shall be repaired at Seller's expense in accordance with contract terms and conditions.

END OF SECTION

9 2 1 2 4 1 3 0 5 2 2

THIS PAGE INTENTIONALLY
LEFT BLANK

SECTION 16110
ELECTRICAL MATERIALS AND DEVICES
(SAFETY CLASS 3, RATED FOR SAFETY CLASS 1 DBE)

PART 1 GENERAL

1.1 SUMMARY

This specification section covers the technical requirements for furnishing and delivery of electrical equipment, materials and devices for the mechanical site utilities.

1.2 REFERENCES

The publications listed below form a part of this specification section to the extent referenced. The publications are referred to in the text by the basic designation only.

AMERICAN ASSOCIATION OF STATE HIGHWAY AND TRANSPORTATION OFFICIALS (AASHTO)

AASHTO HB-14	1989 Standard Specification for Highway Bridges

AMERICAN CONCRETE INSTITUTE (ACI)

ACI 318	1989 Building Code Requirements for Reinforced Concrete and Commentary

AMERICAN NATIONAL STANDARDS INSTITUTE (ANSI)

ANSI C57.12.70	1978 Terminal Markings and Connections for Distribution and Power Transformers
ANSI C57.12.90	1987 Standard Test Code for Liquid-Immersed Distribution, Power, and Regulating Transformers and IEEE Guide for Short Circuit Testing of Distribution and Power Transformers
ANSI C78.41	1987 Electric Lamps - Low Pressure Sodium Lamps
ANSI C82.1	1985 Ballasts for Fluorescent Lamps - Specifications
ANSI C82.9	1988 High Intensity Discharge and Low Pressure Sodium Lamps, Ballasts, and Transformers - Definitions

9 2 1 2 4 1 3 0 5 2 3

ANSI MC96.1	1982 Temperature Measurement Thermocouples

AMERICAN SOCIETY FOR TESTING AND MATERIALS (ASTM)

ASTM A475	1989 Standard Specification for Zinc-Coated Steel Wire Strand
ASTM A615	1990 Standard Specification for Deformed and Plain Billet-Steel Bars for Concrete Reinforcement
ASTM A706	1990 Standard Specification for Low Alloy Steel Deformed Bars for Concrete Reinforcement
ASTM B3	1990 Standard Specification for Soft or Annealed Copper Wire
ASTM B8	1986 Standard Specification for Concentric-Lay-Stranded Copper Conductors, Hard, Medium-Hard, or Soft
ASTM B187	1986 Standard Specification for Copper Bus Bar, Rod and Shapes
ASTM C33	1990 Standard Specification for Concrete Aggregates
ASTM C150	1989 Standard Specification for Portland Cement

NATIONAL ELECTRICAL MANUFACTURERS ASSOCIATION (NEMA)

NEMA 250	1985 Enclosures for Electrical Equipment (1000 Volts Maximum) Revision 2 - 1988
NEMA AB1	1986 Molded Case Circuit Breakers and Molded Case Switches
NEMA ICS4	1983 Terminal Blocks for Industrial Use
NEMA OS1	1989 Sheet-Steel Outlet Boxes, Device Boxes, Covers and Box Supports
NEMA PB1	1990 Panelboards
NEMA RN-1	1986 Polyvinyl-Chloride (PVC) Externally Coated Galvanized Rigid Steel Conduit and Intermediate Metal Conduit

9 2 1 2 4 1 3 0 5 2 4

NEMA ST20	1986 Dry-Type Transformers for General Applications
NEMA WC5	1973 Thermoplastic-Insulated Wire and Cable for the Transmission and Distribution of Electrical Energy
NEMA WC7	1988 Cross-Linked-Thermosetting-Polyethylene-Insulated Wire and Cable for the Transmission and Distribution of Electrical Energy
NEMA WD1	1983 General Requirements for Wiring Devices

NATIONAL FIRE PROTECTION ASSOCIATION (NFPA)

NFPA 70	1990 National Electrical Code (NEC)

UNDERWRITERS LABORATORIES, INC. (UL)

UL 13	1990 Power-Limited Circuit Cables
UL 44	1983 Rubber Insulated Wires and Cables
UL 50	1988 Cabinets and Boxes
UL 67	1988 Panelboards
UL 360	1986 Liquid-Tight Flexible Steel Conduit
UL 467	1984 Grounding and Bonding Equipment
UL 486A	1980 Wire Connectors and Soldering Lugs for Use with Copper Conductors
UL 489	1986 Molded-Case Circuit Breakers and Circuit-Breaker Enclosures
UL 510	1986 Insulating Tape
UL 514B	1989 Fittings for Conduit and Outlet Boxes
UL 651	1989 Schedule 40 and 80 Rigid PVC Conduit
UL 1059	1988 Terminal Blocks, Second Edition - 1989
UL 1242	1983 Intermediate Metal Conduit

9 2 1 2 4 1 3 0 5 2 5

UL 1277	1989 Electrical Power and Control Tray Cables with Optional Optical-Fiber Members
UL 1561	1986 Dry-Type General Purpose and Power Transformers
UL 1581	1983 Reference Standard for Electrical Wires, Cables and Flexible Cords

1.3 **RELATED REQUIREMENTS**

Specification Section 01730	Operation and Maintenance Data
Specification Section 16100	Electrical Installation
Specification Section 16111	Conduit/Cable Schedule
Specification Section 16905	Electrical Testing

1.4 **SUBMITTALS**

Submit the following in accordance with the Vendor Drawing and Data Requirements section of the Order/Subcontract.

1.4.1 Catalog and Manufacturer's Data

Catalog and manufacturer's data shall be submitted for the following:

A. Anti-oxidizing compound

B. Ballasts

C. Cable pulling lubricant

D. Cable ties

E. Combination motor starters

F. Conduit

G. Conduit fittings

H. Conduit support devices and hardware

I. Copper conductor terminations

J. Grounding materials

K. Heat tracing materials and devices

9 2 1 2 4 1 3 0 5 2 6

L. Identification bands and tags

M. Junction and pull boxes

N. Lighting fixtures

O. Power factor correction capacitors

P. Receptacles

Q. Sealant

R. Switches

S. Terminal blocks

T. Terminal cabinets and relay panels

U. Utility boxes

V. Utility chain

W. Wire connectors

X. Wiring ducts

1.4.2 Physical Characteristics of Cable including the following:

A. Details of construction for each different type of wire.

B. Overall wire diameter.

C. Insulation thickness (average minimum and average maximum).

D. Thickness and color of jacket.

1.4.3 A copy of the UL listing cards certifying that cable is in compliance with the UL standards referenced in this specification section.

1.4.4 Cable manufacturer's installation instructions including the following:

A. Maximum sidewall pressure.

B. Maximum pulling tension.

C. Permanent/temporary bending and training radius.

D. Acceptable splicing methods and materials.

E. Pulling lubricant compatibility.

1.4.5 Data Sheets

Submit product data sheets for transformers, cable connectors, bus connectors, panelboards, circuit breakers, and busing assembly.

1.4.6 Shop Drawings

1.4.6.1 Submit detailed shop drawings for transformers including the following:

A. Dimensioned plans.

B. Elevations.

C. Total operating weight.

D. Location of overall center of gravity.

E. Base frame details.

F. Locations of conduit entrance to primary and secondary terminal chambers.

G. Locations of removable plates.

H. Locations and sizes of anchor bolts.

I. Electrical ground lugs.

J. Point-to-point wiring diagrams.

K. Anchorage details.

1.4.6.2 Submit detailed shop drawings for panelboards including the following:

A. Dimensional plan, front and end view of each panelboard enclosure supporting frame structure and sheet metal thickness of enclosure.

B. Conduit entrance locations and dimensions for both top and bottom entrance.

C. Detail drawings showing typical mounting details and section view including wiring trough location and dimensions.

D. Neutral and ground connections.

E. Weight of each panelboard.

F. Wiring diagram of individual panelboards with location of each circuit breaker indicated.

1.4.6.3 Submit detailed shop drawings for public address equipment including the following:

A. Dimensional plan, front and end view of each component.

B. Conduit entrance locations and dimensions for both top and bottom entrance.

C. Detail drawings showing typical mounting details.

D. Installation drawings showing size and wire fill for conduit system.

E. Mounting details for speakers and horns.

F. Weight of each component.

G. Wiring diagram of individual components.

H. System design drawings with calculated dB levels and input power requirements (operating and standby mode).

I. Nameplate drawings.

1.4.7 Test Reports

Submit Certified Factory Acceptance Test Reports for transformers in accordance with ANSI Standard C57.12.90.

1.4.8 Installation Instructions

Submit Manufacturer's Installation instructions.

1.4.9 Manufacturer's Drawings

Lighting fixture drawings shall include dimensions, effective projected area, accessories, and installation and construction details. Drawings shall also include photometric data, including zonal lumen data, and candlepower distribution data.

1.4.10 Operation and maintenance data in accordance with Specification Section 01730, Operation and Maintenance Data.

9 2 1 2 4 1 3 0 5 2 9

1.5 **PROJECT OR SITE ENVIRONMENTAL CONDITIONS**

1.5.1 Climatic and Geographic Site Conditions

A. Site Elevation 714 feet above sea level

B. Barometric Pressure 14.3 psia

C. Outside Design Temperature

1) Maximum Design Temperature 110°F

2) Minimum Design Temperature -20°F

1.5.2 Operating Environment

A. Normal Temperature -20° to 110°F

PART 2 PRODUCTS

2.1 **MATERIALS AND EQUIPMENT**

2.1.1 Conduit

2.1.1.1 Intermediate Metal Conduit

Intermediate metal conduit shall be in accordance with UL 1242.

2.1.1.2 PVC Conduit

PVC conduit shall be Schedule 80 in accordance with UL 651.

2.1.1.3 PVC Coated Rigid Steel Galvanized Conduit

PVC coated Rigid Steel Galvanized Conduit shall be in accordance with NEMA RN-1.

2.1.1.4 Liquid-Tight Flexible Metal Conduit

Liquid-tight flexible metal conduit shall be fabricated of galvanized steel flexible tubing with a synthetic polyvinyl chloride (PVC) jacket extruded over the tubing. Jacket shall be positively locked to steel tubing to prevent sleeving. Liquid-tight flexible metal conduit shall be in accordance with UL 360.

9 2 1 2 4 1 3 0 5 3 0

2.1.2 Enclosures

2.1.2.1 Junction and Pull Boxes

Junction and pull boxes shall be sized as indicated on the Contract Drawings. Where not specifically sized on the Contract Drawings, all boxes shall be sized in accordance with the National Electrical Code. Boxes and box covers shall be fabricated from sheet steel of gauges defined by National Electrical Code. Boxes shall be in accordance with NEMA OS1 and UL 50.

2.1.2.2 Terminal Cabinets and Relay Panels

Terminal cabinets and relay panels shall be NEMA 12 enclosures in accordance with NEMA 250 except where indicated on the Contract Drawings. Terminal cabinets and relay panels of 16 x 12 x 6 inch size and larger shall be EMI/RFI shielded NEMA Type 12 enclosure; Hoffman Bulletin A-13 or equal. Terminal cabinets smaller than 16 x 12 x 6 inches shall be Hoffman Bulletin A-15 or equal. Cabinets and panels shall be supplied with metal partitions where indicated on the Contract Drawings.

2.1.3 Conduit Fittings

2.1.3.1 Cast malleable iron or steel conduit fittings used with intermediate metal conduit shall be thoroughly coated with metallic zinc or cadmium inside and outside after all machine work is completed and in accordance with UL 514B. Appleton Form 35 or equal. LB type fittings for 1-1/2 inch and larger conduit shall be Appleton LBD or equal.

2.1.3.2 Mogul fittings shall be malleable iron with cadmium finish. Covers shall be from the same material as fittings, and shall be raised to allow additional wiring area. Appleton Series M or equal.

2.1.3.3 Fittings used with liquid-tight flexible metal conduit shall be malleable iron/steel construction, electro zinc plated inside and outside, furnished with nylon insulated throat, taper threaded hub, and an external ground lug. Appleton Series STB or equal.

2.1.3.4 Nonmetallic insulating type bushings used on intermediate metal conduit shall be Appleton Type BBU or equal.

2.1.3.5 Rigid steel conduit caps shall be malleable iron capped bushings with cadmium finish. Appleton Type BUC or equal.

2.1.3.6 Conduit drains shall be stainless steel, standard type and in accordance with UL 514B. Appleton ECDB or equal.

2.1.3.7 Conduit union fittings shall be steel (1/2 inch - 1 inch) or steel alloy (1-1/4 inch - 6 inch) with zinc-electroplated finish and in accordance with UL 514B. Appleton UNY and UNF or equal.

2.1.3.8 Conduit reducers shall be steel or steel alloy with zinc-electroplated finish. Appleton RB or equal.

2.1.3.9 Lighting fixture hangers shall be cushion type with malleable iron body and zinc-electroplated finish. Appleton Type AL or equal.

2.1.4 Conduit Support Devices and Hardware

2.1.4.1 Conduit shall be supported by miscellaneous supports, and conduit supports, clamps and/or straps in accordance with the Contract Drawings and the National Electrical Code.

2.1.4.2 Conduit supports unless otherwise noted on the Contract Drawings shall be fabricated of 12 gauge (1-5/8 inch by 1-5/8 inch) metal framing channels: Unistrut P-1000 (pre-dipped galvanized) with Unistrut P-1000 series (electrogalvanized) pipe clamps or equal.

2.1.4.3 Conduit clamps shall be malleable iron type with tempered steel insert. Appleton Series PC or equal.

2.1.4.4 Conduit straps shall be one hole malleable iron strap and clamp back for 1/2 inch to 1 inch. Appleton CL and CLB for IMC or equal. Two hole steel strap (heavy duty) - 1-1/4 inches and up shall be Appleton Series CF or equal.

2.1.5 Copper Conductor Terminations

2.1.5.1 Termination of electronic cable conductors shall be made with tin plated, copper compression flanged fork, nylon, self-insulated terminals. Terminals shall be in accordance with UL 486A. Thomas and Betts Catalog No. RA (#22-16 AWG), RB (#18-14 AWG) or equal.

2.1.5.2 Termination of circuits with two or three conductors per phase shall be made with two or four hole copper alloy solderless lugs. Burndy Type Q2A and Q3A or equal.

2.1.5.3 Termination of instrument pigtail leads and splicing of control and ground wires shall be made with insulated pressure connectors. Thomas and Betts "Sta-Kon" or equal.

2.1.5.4 Termination of 600 volt power conductors shall be made with tin plated, copper compression type lugs, bolted and taped. Lugs shall be in accordance with UL 486A. Connection for conductors smaller than #8 AWG shall be made with Thomas and Betts "Sta-Kon" Series "C" (#12-10), Series "B" (#16-14), Series "A" (#22-18) or equal.

2.1.5.5 Termination and/or splicing of lighting leads shall be made with hand twist type wire joints with tapered spring lock and nylon insulator skirt. Terminals shall be in accordance with UL 486A. Thomas and Betts "Piggy" wire joints, Catalog Type PT or equal.

2.1.5.6 Termination of lighting and control leads on screw terminals shall be made with tin plated, copper compression fork, nylon, self-insulated terminals. Terminals shall be in accordance with UL 486A. Thomas and Betts Catalog No. RB (#18-14 AWG), RA (#12-10 AWG) or equal with bolt holes to suit application.

2.1.5.7 Splices and taps in copper conductors No. 8 AWG and larger and terminations in equipment lugs (i.e., molded case circuit breakers) shall be made with wrought copper compression connectors.

TYPE OF CONNECTION	TYPE OF CONNECTOR	THOMAS AND BETTS SERIES NO. OR EQUAL
Splice	Two-Way Connector	54500
Tap	"C" Tap	54700
Termination	One-Hole Lug (#8 - #1 AWG) Two-Hole Lug (#1/0 - 4/0) Two-Hole Lug (250 MCM and larger)	54100 54200 53210

2.1.6 Terminal Blocks

Terminal blocks shall be provided and mounted in junction boxes and terminal cabinets as indicated on the Contract Drawings with each cabinet containing 10 percent spare terminals (minimum 2). Terminal blocks shall be channel mounting type rated 600 volts with screw type terminals on both sides. Terminal blocks shall be in accordance with NEMA ICS4 and UL 1059. Allen Bradley Catalog Number 1492-CD3 or equal.

2.1.7 Wiring Ducts and Cable Ties

2.1.7.1 Spiral wrapping for wiring across hinged doors and similar applications shall be flame retardant polyethylene. Panduit Part Number T12R, T25R, T50R or equal.

2.1.7.2 Cable ties for bundling of cables in panels, terminal cabinets wireways, cable trays, etc., shall be nylon, self-locking type. Thomas and Betts Catalog Number TY or equal.

9 2 1 2 4 1 3 0 5 3 3

2.1.8 Identification

2.1.8.1 Wire and Cable

2.1.8.1.1 Identification of control, electronic and power circuits shall be by means of heat shrinkable, insulated tubing with circuit number identification by printed characters on white heat shrink sleeve; Brady Catalog Number B320 or equal.

2.1.8.1.2 Identification of instrument cable shall be by means of heat shrinkable, insulated tubing with instrument tag number identification by printed characters on white heat shrink sleeve; Brady Catalog Number B320 or equal.

2.1.8.1.3 Electrical tape for color coding of conductors shall be 3/4 inch wide, vinyl plastic and in accordance with UL 510. 3M Company Scotch 35 or equal.

2.1.8.2 Conduits

2.1.8.2.1 Identification of conduits shall be by means of self-sticking vinyl cloth, black identification on an orange background, as manufactured by W. H. Brady Company or equal. Label length shall be as indicated below:

CONDUIT TRADE SIZE	BAND LENGTH	CHARACTER SIZE
3/4" to 1-1/4"	8"	1/2"
1-1/2" to 2"	8"	3/4"

2.1.8.2.2 Conduits containing circuits greater than 120V to ground or 240V line to line shall be identified in accordance with the Contract Drawings.

2.1.8.3 Equipment

Equipment and devices shall be identified with phenolic nameplates. Nameplates shall be white with black engraving.

2.1.9 Switches

2.1.9.1 Three Way Toggle Switch

Switch shall be an ivory toggle type, 3-way, 120V/277V, 20 ampere. Hubbell Catalog Number 1223-I or equal with surface mounted box and face plate Hubbell Catalog Number FS-1 with 1FT or equal.

9 2 1 2 4 1 3 0 5 3 4

2.1.9.2 Single Pole Toggle Switch

Switch shall be an ivory toggle type, single pole, 120V/277V, 20 ampere. Hubbell Catalog Number 1221-I or equal with surface mounted box and face plate Hubbell Catalog Number FS-1 with 1FT or equal.

2.1.10 Receptacles

Receptacles shall have NEMA configurations in accordance with NEMA WD1. Specific types of receptacles to be installed shall be as noted on the Contract Drawings.

2.1.10.1 Duplex Receptacles

Receptacle shall be an ivory grounded type, 125 volt, 20 ampere, 3-wire, 2-pole NEMA 5-20R. Hubbell Catalog Number 5262-I or equal.

2.1.10.2 Power Receptacles

Receptacle shall be 3-pole, 4-wire, 480 volt, 60 ampere type with 15° angle back mounting box. Hubbell Catalog Number 460R7W and BB60-2W or equal.

2.1.11 Motor Controls

Combination Motor Starter

Combination motor starters shall consist of 480 volt, 3 phase, 60 Hz, full voltage non-reversing magnetic motor starter with ambient compensated thermal overload relay. Starter shall be equipped with an MCP circuit breaker with adjustable magnetic trip elements, 480V-120V fused control power transformer sized to supply door mounted double pole selector switch or push buttons as indicated on the Contract Drawings. Motor starters shall be single speed and sized as shown on the Contract Drawings. Westinghouse Series A200 or equal.

2.1.12 Heat Tracing Materials and Devices

2.1.12.1 Cable shall be self limiting type. Construction shall consist of #16 stranded copper conductors with a core material of semi-conductive graphite network polyolefin insulation jacket and tinned copper shield.

9 2 1 2 4 1 3 0 5 3 5

2.1.12.2 Heat tracing cables shall meet the following criteria:

SERVICE VOLTAGE	MAX MAIN TEMP	MAX INTERMITTENT EXPOSURE	MIN WATT DENSITY	MAX FEET LENGTH	CHEMELEX OR EQUAL
120V	150°F	185°F	5W/FT @ 50°F	270	5BTV1-C
120V	150°F	185°F	8W/FT @ 50°F	200	8BTV1-C
120V	150°F	185°F	10W/FT @ 50°F	150	10BTV1-C

2.1.12.3 Electrical heating cables shall include power connection kits and end terminations. Chemelex Type PMK or equal.

2.1.12.4 Thermostats for electric heat tracing shall be ambient sensing type. Sensor exposure limits shall be -65°F to 160°F. Sensor range shall be 15 to 140°F and rating shall be 22 amps at 120VAC. The enclosure shall be NEMA 4X in accordance with NEMA 250 Chemelex AMC-1A or equal.

2.1.12.5 Contactors for heat tracing shall be 3 pole, with field replaceable contacts, mounted in a NEMA 4X enclosure and rated at 40 amps per pole at 600 volts with a 120 VAC coil.

2.1.12.6 Electric heat tracing materials shall consist of the following:

2.1.12.6.1 Fiberglass tape used to attach the self limiting heater to the pipe, Chemelex Catalog No. GT66 or equal.

2.1.12.6.2 Stainless steel tie wire type 3021304, .051 in O.D., Chemelex Catalog No. HTTK-TW or equal.

2.1.12.6.3 Electric tracing warning signs, Chemelex Catalog No. ETL or equal.

2.1.13 Grounding Materials

2.1.13.1 Grounding Conductors

2.1.13.1.1 The electrical equipment grounding and instrument ground (isolated) conductors shall be continuous XHHW insulated copper cable, sized as indicated on the Contract Drawings. Cable shall be in accordance with Paragraph 2.1.19.

2.1.13.1.2 External building ground loop and bonded connections as shown on the Contract Drawings shall be 5/8 inch, 7 strand, low carbon grade steel. Coating shall be Class B zinc in accordance with ASTM A475.

9212413053 6

2.1.13.1.3 Internal building ground loop and bonded connections as shown on the Contract Drawings shall be bare copper wire in accordance with ASTM B3. Wire shall be Class B concentric stranded in accordance with ASTM B8.

2.1.13.1.4 Conductors for connection to nonelectrical equipment and structures shall be sized as indicated on Contract Drawings.

2.1.13.2 Ground Rods

Ground rods shall be galvanized steel, 5/8 inch diameter by 8 feet or 10 feet, as indicated on Contract Drawings. Joslyn Number J5328 and J5330 or equal.

2.1.13.3 Weld connections between ground conductors or of ground conductors to steel surfaces shall be by the exothermic process type as indicated on the Contract Drawings.

2.1.13.4 Insulating Tape

Insulating tape shall be vinyl insulating type with a continuous temperature rating of 105°C in accordance with UL 510. 3M Super 33+ Series or equal.

2.1.13.5 Ground Connections

2.1.13.5.1 Grounding connectors, screws, bolts or clamps used shall be bronze or Everdur (unless specifically indicated otherwise on the Contract Drawings) and shall be in accordance with UL 467.

2.1.13.5.2 Connectors for grounding to flat metal surfaces shall have body of cast copper alloys with bolts, nuts, and lockwashers of silicon bronze. Type as indicated on the Contract Drawings.

2.1.13.5.3 Connections to ground buses and connections of grounding conductors to switch boxes, panelboards, cabinets, etc., shall be made with either bolted mechanical lugs or compression connectors.

2.1.13.5.4 Ground connections to pipe shall be made with O.Z. Series Type ABG connectors or equal as shown on the Contract Drawings.

2.1.13.6 Conduit ground bushings shall be corrosion-resistant bronze with a mechanical connection for joining a ground wire to a conduit. O.Z. Type BLG or equal.

2.1.13.7 Bus bar shall be high conductivity, bare copper, in accordance with ASTM B187, 1/4 inch thick by 2 inches wide.

9 2 1 2 4 1 3 0 5 3 7

2.1.14 Sealant

Sealant for preventing moisture from entering conduits shall be a non-oxidizing and noncorrosive compound, Dow Corning 738 or equal.

2.1.15 Anti-Oxidizing Compound

Anti-oxidizing compound for connections of grounding connectors shall be electrically conductive, rust and corrosion inhibitive, Thomas and Betts "Kopr-Shield" or equal.

2.1.16 Utility Chain

Utility chain for hanging fixtures shall be end welded, zinc plated 14 gauge steel wire with 75 pound work load limit. McMasters-Carr Catalog Number 8951T16 or equal.

2.1.17 Power Factor Correction Capacitors

Power factor correction capacitors shall be 480V, wall mounted industrial type. Capacitor unit shall be 3 phase, hermetically sealed with current limiting fuses. Indoor/outdoor enclosure shall contain a pre-wired terminal block and a ground terminal. KVAR rating shall be in accordance with the Contract Drawings. Cornell Dubilier IMS Series or equal.

2.1.18 Cable Pulling Lubricant

Cable pulling lubricant shall be Buchanan Quick-Slip Catalog Number BQS-55 or equal.

2.1.19 600 Volt Power Cable

2.1.19.1 General Requirements

2.1.19.1.1 Cable supplied shall be new, shall be the product of an established manufacturer normally engaged in the production of cable with a minimum of 5 years documented experience, and shall be that manufacturer's newest product.

2.1.19.1.2 Cable on each reel shall be continuous. Factory splices or factory repairs are not acceptable in individual conductors. Cable shall be free of abrasions and/or abnormalities.

2.1.19.2 Single Conductor Cable

2.1.19.2.1 Design Requirements

Cables herein specified shall have a 600 volt rating. Cables shall be Type XHHW in accordance with the National Electrical

9 2 1 2 4 1 3 0 5 3 8

Code, NFPA 70, Article 310 and UL 44. The maximum continuous cable temperature shall be 90°C for dry and 75°C for wet location. Okonite X-Olene Type XHHW or approved equal.

2.1.19.2.2 Conductor

Conductor shall be uncoated, annealed, bare copper wire in accordance with ASTM B3. Conductor shall be Class B, concentric stranded in accordance with ASTM B8.

2.1.19.2.3 Insulation

The insulation shall be a flame-retardant, heat and moisture resistant type of cross-linked-polyethylene compound. The insulation shall be in accordance with Part 3 of NEMA WC7.

2.1.19.2.4 Nominal insulation thickness and maximum wire diameter shall be as follows:

CONDUCTOR SIZE (AWG)	INSULATION THICKNESS MILS	MAXIMUM WIRE O.D. INCHES
14	30	.14
12	30	.16
10	30	.18
8	45	.24
6	45	.28
4	45	.33
2	45	.39
1	55	.45
1/0	55	.49
2/0	55	.54
3/0	55	.59
4/0	55	.65
250	65	.72
350	65	.82
500	65	.96

2.1.19.3 Multiconductor Direct Burial Cable

2.1.19.3.1 Design Requirements

Cables herein specified shall have a 600 volt rating. They shall be Type TC multiconductor cable suitable for direct burial in accordance with the National Electrical Code, NFPA 70, Articles 310 and 340, UL 1277 and UL 1581. Cables shall include an

insulated ground wire. Okonite X-Olene-Okoseal Type TC cable or approved equal.

2.1.19.3.2 Conductor

Conductor shall be uncoated, annealed, bare copper wire in accordance with ASTM B3. Conductor shall be Class B, concentric stranded in accordance with ASTM B8.

2.1.19.3.3 Conductor Insulation

The conductor insulation shall be a flame-retardant, cross-linked-polyethylene compound, type XHHW, in accordance with Part 3 of NEMA WC7 and UL 44.

2.1.19.3.4 Jacket

Overall jacket shall be polyvinyl chloride (PVC) complying with UL 1277 and UL 1581. Cable jacket shall be sunlight resistant and suitable for direct burial.

2.1.19.3.5 Nominal insulation thickness and maximum wire diameter shall be as follows:

CONDUCTOR SIZE (AWG)	NUMBER OF CONDUCTORS	INSULATION THICKNESS (MILS)	GND COND SIZE (AWG)	MAXIMUM CABLE O.D. INCHES
12	3	30	12	.49
10	3	30	10	.58
8	3	45	10	.66
6	3	45	8	.74
4	3	45	6	.84
4	4	45	6	.97
2	3	45	6	1.01
1	3	55	6	1.14
1/0	3	55	6	1.22
2/0	3	55	4	1.32
2/0	4	55	4	1.46
4/0	3	55	4	1.55
4/0	4	55	4	1.78
250	3	65	3	1.76
350	3	65	3	1.98
500	3	65	2	2.26

2.1.20 Instrument Cable

2.1.20.1 General

2.1.20.1.1 Cable supplied shall be new, shall be the product of an established manufacturer normally engaged in the production of cable with a minimum of 5 years documented experience, and shall be that manufacturer's newest product.

9 2 1 2 4 1 3 0 5 4 0

2.1.20.1.2 Cable on each reel shall be continuous. Factory splices or factory repairs are not acceptable in individual conductors. Cable shall be free of abrasions and/or abnormalities.

The following cable types refer to cable designations in the Contract Drawings.

2.1.20.2 Cable Type AD

2.1.20.2.1 Cable shall be a shielded single twisted pair, 600V, #16 AWG. Conductor shall be uncoated, annealed, bare copper wire in accordance with ASTM B3 and Class B, concentric stranded in accordance with ASTM B8.

2.1.20.2.2 Primary insulation shall be 15 mils nominal 90°C rated polyvinyl chloride (PVC) and 4 mils nylon.

2.1.20.2.3 Cable shall contain one black and one white conductor.

2.1.20.2.4 Cable shield shall provide 100 percent coverage by aluminum-mylar laminate tape shield, helically applied over the twisted pair with the aluminum on inside in continuous contact with drain wire.

2.1.20.2.5 Cable shall include a bare #18 AWG 7 strand tinned copper drain wire.

2.1.20.2.6 Pair jacket shall be 45 mils nominal 90°C rated black polyvinyl chloride (PVC).

2.1.20.2.7 Overall cable diameter shall be maximum of 0.325 inches.

2.1.20.2.8 Cable shall be constructed in accordance with UL 13 and NEMA WC5. Dekoron 1C52-67000 or equal.

2.1.20.3 Cable Type AC

2.1.20.3.1 Cable shall be a shielded single twisted pair, 600V, #14 AWG. Conductor shall be tin coated copper wire Class B, concentric stranded in accordance with ASTM B8.

2.1.20.3.2 Primary insulation shall be 32 mils nominal 105°C rated polyvinyl chloride (PVC).

2.1.20.3.3 Cable shall contain one black and one white conductor.

2.1.20.3.4 Pair jacket shall be 63 mils nominal 105°C rated black polyvinyl chloride (PVC).

2.1.20.3.5 Overall cable diameter shall be maximum of 0.40 inches.

2.1.20.3.6 Cable shall be constructed in accordance with UL 13 and NEMA WC5, Alpha 5442.

2.1.21 Thermocouple Cable

2.1.21.1 General

2.1.21.1.1 Cable supplied shall be new, shall be the product of an established manufacturer normally engaged in the production of cable with a minimum of 5 years documented experience, and shall be that manufacturer's newest product.

2.1.21.1.2 Cable on each reel shall be continuous. Factory splices or factory repairs are not acceptable in individual conductors. Cable shall be free of abrasions and/or abnormalities.

The following cable types refer to cable designations in Contract Drawings.

2.1.21.2 Thermocouple Cable Type CA

2.1.21.2.1 Conductors shall be 16 gauge twisted solid alloy iron/constantan (Type JX) in accordance with ANSI MC96.1. Drain wire shall be 18 gauge, solid tinned copper.

2.1.21.2.2 Primary insulation shall be 300 volt, 105°C rated Polyvinyl Chloride (PVC).

2.1.21.2.3 Single pair cable shield shall be aluminum-mylar tape with a 25 percent minimum overlap. Drain wire shall be installed in continuous contact with aluminum shield.

2.1.21.2.4 Overall jacket material shall be 90°C rated polyvinyl chloride (PVC) in accordance with NEMA WC5. Jacket thickness shall be 35 mils.

2.1.21.2.5 Thermocouple cable extensions wires and outer jacket shall be color coded in accordance with ANSI MC96.1.

2.1.22 Transformers

2.1.22.1 General

2.1.22.1.1 The transformers specified herein shall be general-purpose, ventilated, dry-type and totally enclosed.

2.1.22.1.2 Transformers shall comply with ANSI C57.12.70, NEMA ST20 and UL 1561.

2.1.22.1.3 Transformers shall be 480V Delta primary 208/120 Wye Secondary, 60 Hz, 3Ø, 4W except as noted otherwise.

9212413054 2

2.1.22.2 Transformer Enclosure

2.1.22.2.1 Transformers shall be suitable for indoor use. Space shall be provided within the transformer enclosure for making up the Seller's cable connections to the transformer winding terminals.

2.1.22.2.2 One or more openings shall be located and sized to permit ready access to the cable terminal connection lugs.

2.1.22.2.3 Enclosure grounding provisions shall consist of one grounding pad, welded on the base or on the enclosure near the base.

2.1.22.3 Transformer Taps

Full rated tap stubs shall be provided on the primary windings. Transformers shall have a minimum number of four (4) 2-1/2 percent full capacity (FC) kVA taps, (2) below nominal (BN) and (2) above nominal (AN) rated primary voltage.

2.1.22.4 Temperature Ratings

Transformer shall be designed and rated for a minimum 115°C rise above 40°C ambient.

2.1.22.5 Dry-Type Transformer with Panelboard

2.1.22.5.1 XT-32A-213 shall be a combination transformer and distribution panelboard, including transformer main and secondary circuit breakers. The transformer shall be rated 5kVA, 480-240/120V, single phase. Quantity and rating of circuit breakers shall be in accordance with Contract Drawings. Square D MP25S40F or equal.

2.1.22.5.2 Full rated tap stubs shall be provided on the primary windings. Transformer shall have a minimum of two 5 percent full capacity below nominal primary voltage adjustment taps.

2.1.22.6 Transformer Identification

Each transformer shall be identified by a permanently attached nameplate showing the following:

A. The identification "Transformer"

B. Number of phases

C. Frequency

D. kVA rating

E. Voltage rating

F. Temperature rise

G. Name of Manufacturer

H. Vector diagram

I. Tap voltages

J. Percent impedance

K. Connection diagram

L. Approximate total weight

2.1.22.7 Each transformer shall be identified by a laminated phenolic nameplate attached with screws showing the equipment number and description (see Attachment A). Nameplates shall have 3/4 inch high etched black lettering on white background.

2.1.23 Panelboards

2.1.23.1 General

Panelboards specified herein shall be factory assembled safety dead front type in accordance with NEMA PB1 and UL67.

2.1.23.2 Enclosures

2.1.23.2.1 The panelboard assembly shall be enclosed in a surface mounted NEMA 1 steel cabinet per NEMA 250. Cabinets shall have wiring gutter on bottom, sides and top, without knockouts, with safety dead front and all line parts concealed. Square D type NQOD (208/120 Vac) and Square D type NEHB (480/277 Vac) or equal.

2.1.23.2.2 Fronts shall include doors and have flush tumbler-type locks. Locks shall be keyed alike. Each panelboard shall be supplied with a key.

2.1.23.2.3 Fronts shall have adjustable indicating trim clamps which shall be completely concealed when the doors are closed. Fronts shall not be removable with door in the locked position.

2.1.23.2.4 A circuit directory frame and card with a clear plastic covering shall be provided on the inside of the door.

2.1.23.2.5 Each panelboard shall have a ground bus bolted to the frame and an insulated neutral bus. Ground and neutral buses shall have industry standard wire terminals for all incoming and branch circuit conductors.

9212415054

2.1.23.3 Circuit Breaker

2.1.23.3.1 Circuit breakers shall have 100 ampere minimum frame size complete with thermal magnetic non-interchangeable trip elements. Multi-pole breakers shall have common trip action. Breakers shall be bolt-on, quick-make, quick-break, trip indicating type with solderless lugs in accordance with NEMA Standard AB1 and UL 489. Number of poles and trip rating for each circuit breaker shall be as defined on the contract drawing panelboard schedules.

2.1.23.3.2 Circuit breakers shall be rated no less than: 10,000 amperes rms interrupting for 208/120V and 14,000 amperes rms for 480/277V.

2.1.23.3.3 Main circuit breakers 225 amperes and larger shall be mounted vertically.

2.1.23.3.4 The number of future circuit breaker spaces shall be as defined on the Contract Drawing Panelboard Schedules.

2.1.23.4 Busing Assembly

2.1.23.4.1 Panelboard bus structure including main breaker or main lugs shall have current ratings as shown on the Contract Drawings.

2.1.23.4.2 The buses in all panels shall be of 98 percent conductivity copper. Neutral buses shall be of same capacity as main buses in each panel. Compression type copper lugs shall be provided on each panelboard bus. Lugs shall be arranged for top or bottom entry for panel feeders, as shown on Contract Drawings.

2.1.23.5 Identification

An engraved nameplate of laminated phenolic with 3/4 inch high etched black lettering on a white background shall be attached with screws, centered on the top trim of each panelboard and bear the equipment name and number (see Attachment B).

2.1.24 Interior Lighting

2.1.24.1 Lamps

Fluorescent lamps shall be cool white type. Incandescent and low pressure sodium lamps shall be clear type.

2.1.24.2 Fixtures

2.1.24.2.1 Fluorescent Lighting Fixtures

Fluorescent fixture shall be equipped with ballasts that shall be UL listed and of the high power factor type. The ballast shall be

rated for start-up in -20°F. Rapid start ballasts shall be in accordance with ANSI C82.1.

A. Fixture #1

Fixture shall be industrial, open ventilated reflector, 4'-0", two tube, 277V, rapid start, chain mounted. Fixture shall be suitable for through wiring in accordance with the National Electrical Code (NFPA 70) Articles 410-11 and 410-31. Prudential Lighting Catalog Number P-222-48RS/277VAC or equal.

B. Fixture #2

Fixture shall be industrial, open ventilated reflector, 4'-0", two tube, 120V, rapid start, chain mounted. Prudential Lighting Catalog Number P-222-48RS/120VAC or equal.

2.1.24.2.2 Emergency Lighting Fixtures

A. Fixture #3

Fixture shall be 277V, three lamp, incandescent, wall mounted, constructed of 18 gauge steel. Battery shall be 90 minute minimum, sealed, rechargeable type. Holophane Catalog Number M-19-35-SEIS-PT/277V or equal.

2.1.24.3 Low Pressure Sodium Fixtures

Low pressure sodium lighting fixtures shall be in accordance with ANSI C78.41. Ballasts shall be high power factor type in accordance with ANSI C82.9.

A. Fixture #5

Fixture shall be 277V, wall mounted (wall pack) type, 35W with integral ballast. Luminaire housing shall be a cast aluminum for outdoor installation with controlling photo cell. Lens shall be acrylic. Spaulding Lighting Inc. Catalog Number SD-35LPS-PC/277 or equal.

B. Fixture #10

Fixture shall be 120V, wall mounted (wall pack) type, 35W with integral ballast. Luminaire housing shall be cast aluminum suitable for outdoor installation with controlling photo cell. Lens shall by acrylic. Spaulding Lighting Inc. Catalog Number SD-35LPS-PC/120 or equal.

9 2 1 2 4 1 3 0 5 4 6

2.1.25 Public Address Equipment

2.1.25.1 Each type of component shall be the product of one manufacturer. Speakers shall be of the same voltage and ampere rating and shall be identical (same manufacturer and catalog number) unless specifically approved by the Buyer.

2.1.25.2 The public address system shall be one-way. Talk-back speakers shall not be provided.

2.1.25.3 The public address system shall not cause cross-talk interference on other telephone circuits. In addition, installation of the paging system shall ensure feedback interference from the paging speakers is eliminated.

2.1.25.4 The public address system shall be coupled to the Public Automatic Exchange (PAX) telephone system (not in contract) to provide telephone accessed voice paging.

2.1.25.5 Speaker shall be compression driver type with integral line matching transformer. Housing shall be corrosion resistant and suitable for surface mounting. Honeywell Catalog Number SC809A.

2.1.25.6 Speaker assembly shall comply with the following electrical requirements:

A. Operating voltage: 70.7V RMS

B. Frequency Response: 400 to 5000 Hz

C. 91 dBA output at 10 feet

2.1.26 Marking Tape

Plastic marking tape for identifying underground electrical cable shall be six inches wide, yellow color, without printing. Reef Industries Terra Tape or equal.

2.1.27 Wood Boards

Boards for protecting underground direct buried cable(s) shall be preservative treated, one inch thick by eight inches wide (nominal).

2.1.28 Precast Manholes

2.1.28.1 Precast manholes shall be manufactured from reinforced concrete and be produced in a plant specifically designed for that purpose. All work shall be performed under strict plant controlled procedures and supervision.

2.1.28.2 Manhole sizes and knockout details shall be as shown on the Contract Drawings.

2.1.28.3 Precast concrete shall meet the provision of ACI 318, Chapter 16.

2.1.28.4 Manholes shall be designed to resist the following loads in accordance with ACI 318:

- Dead loads due to self weight and any soil overburden loads. The weight of the compacted soil shall be taken to be 110 pcf.

- Live loads due to an HS20-44 truck load as defined in AASHTO HB-14 acting directly over or adjacent to each manhole.

- Lateral earth pressure based on an at-rest lateral earth pressure coefficient of 0.43. To account for increased lateral pressure due to residual compaction effects the lateral earth pressure shall not be taken to be less than 500 psf at any location less than 11 feet beneath the finished surface. The applied lateral earth pressure shall be increased by the application of an additional surcharge to take into account the effect of traffic loads.

- Impact loads due to traffic loads.

- Erection and transportation loads.

2.1.28.5 Precast manholes shall be manufactured from normal weight concrete in accordance with the following:

- Cement conforming to ASTM C150 Type I or II.

- Aggregates conforming to ASTM C33. Gradation as determined by the manufacturer to meet design requirements.

- Admixtures as determined by the manufacturer to meet design requirements.

- Reinforcing steel conforming to ASTM A615 Grade 60 or ASTM A706 Grade 60.

- Concrete mix as determined by the manufacturer to meet the design requirements but shall not have a 28 day compression strength less than 4000 psi.

2.1.28.6 Each component of a precast manhole shall be provided a unique identifier (mark number), in accordance with Paragraph 16.5 of ACI 318.

9 2 1 2 4 1 3 0 5 4 8

2.1.28.7 Manhole covers shall be round cast iron heavy-traffic type not less than 30 inches in diameter. Covers shall be identified by cast-in lettering "ELECTRICAL."

2.1.28.8 Plastic joint sealing compound shall be provided to seal joint between manhole sections.

2.1.28.9 Manholes shall be provided with 12 inch diameter drain sump, pulling irons and cast in slotted channels for cable supports as shown on the Contract Drawings.

2.1.28.10 Two knockouts for ground rods shall be provided at opposing ends of the manhole.

2.1.28.11 Manholes shall be provided with an adequate size ladder.

2.1.28.12 Manholes shall be Utility Vault Company Type "LA" or equal.

2.1.29 Precast Pull Boxes

2.1.29.1 Precast pull boxes shall be manufactured from reinforced concrete and be produced in a plant specifically designed for that purpose. All work shall be performed under strict plant controlled procedures and supervision.

2.1.29.2 Pull boxes sizes and knockout details shall be as shown on the Contract Drawings.

2.1.29.3 Precast concrete shall meet the provision of ACI 318, Chapter 16.

2.1.29.4 Pull boxes shall be designed to resist the following loads in accordance with ACI 318:

- Dead loads due to self weight and any soil overburden loads. The weight of the compacted soil shall be taken to be 110 pcf.

- Live loads due to an HS20-44 truck load as defined in AASHTO HB-14 acting directly over or adjacent to each pull box.

- Lateral earth pressure based on an at-rest lateral earth pressure coefficient of 0.43. To account for increased lateral pressure due to residual compaction effects the lateral earth pressure shall not be taken to be less than 500 psf at any location less than 11 feet beneath the finished surface. The applied lateral earth pressure shall be increased by the application of an additional surcharge to take into account the effect of traffic loads.

- Impact loads due to traffic loads.

- Erection and transportation loads.

2.1.29.5 Precast pull boxes shall be manufactured from normal weight concrete in accordance with the following:

- Cement conforming to ASTM C150 Type I and II.

- Aggregates conforming to ASTM C33. Gradation as determined by the manufacturer to meet design requirements.

- Admixtures as determined by the manufacturer to meet design requirements.

- Reinforcing steel conforming to ASTM A615 Grade 60 or ASTM A706 Grade 60.

- Concrete mix as determined by the manufacturer to meet the design requirements but shall not have a 28 day compression strength less than 4000 psi.

2.1.29.6 Each component of a precast manhole shall be provided a unique identifier (mark number), in accordance with Paragraph 16.5 of ACI 318.

2.1.29.7 Plastic joint sealing compound shall be provided as recommended by the pull box manufacturer.

2.1.29.8 Pull boxes shall be Utility Vault Company Type "LA" or equal.

2.1.29.9 Pull boxes shall be provided with 12 inch diameter drain sump, pulling irons and 1/2 inch diameter inserts for cable supports, 4 each wall.

2.1.29.10 Two knockouts for ground rods shall be provided at opposing ends of the pull boxes.

2.2 FABRICATION AND MANUFACTURE

2.2.1 Cable

2.2.1.1 Surface Marking

The surface of the insulation shall have a durable marking, at intervals not exceeding 24 inches, which shall consist of: manufacturer's name, trademark, or other distinctive marking which identifies the organization responsible for the product; the type letters (TC or XHHW); the wire size (where applicable) in AWG; maximum voltage (300 or 600 volts); and UL marking.

9212413055 0

2.2.1.2 Labeling

Each reel shall have a weatherproof (metal or plastic) tag firmly attached indicating manufacturer, conductor size, length, manufacturer's type, temperature rating, voltage class, and Seller's purchase order and item numbers.

2.2.2 Transformers

The complete transformer shall be subjected to a Factory Acceptance Test in accordance with ANSI C57.12.90. As a minimum an operational check of each component and a demonstration of overall performance shall be performed as described below:

A. Ratio test on the rated voltage connections and on all tap connections.

B. Phase-relation and polarity test on the rated voltage connections.

C. Applied potential and induced potential tests.

PART 3 EXECUTION

3.1 **INSTALLATION, APPLICATION AND ERECTION**

Materials and devices specified herein shall be installed in accordance with Specification Section 16100, Electrical Installation.

3.2 **FIELD QUALITY CONTROL**

Materials and devices specified herein shall be inspected and tested in accordance with Specification Section 16905, Electrical Testing.

END OF SECTION

THIS PAGE INTENTIONALLY
LEFT BLANK

ATTACHMENT A

DRY-TYPE TRANSFORMERS

EQUIPMENT NUMBER	EQUIPMENT NAMEPLATE INSCRIPTION	kVA RATING	TEMPERATURE RISE (°C)	MAXIMUM OVERALL DIMENSIONS H x W x D (Inches)
XT-32A-801	XT-32A-801 480VΔ-208Y/120V Distribution Transformer	15	115°	23 x 21.5 x 15
XT-32A-802	XT-32A-802 480VΔ-208Y/120V Distribution Transformer	15	115°	22.5 x 21.5 x 12.5
XT-32A-213	XT-32A-213 480V-240/120V Power Center	5	115°	32.75 x 12.75 x 12

9 2 1 2 4 1 3 0 5 5 2

THIS PAGE INTENTIONALLY
LEFT BLANK

ATTACHMENT B

ELECTRICAL PANELBOARDS

EQUIPMENT NUMBER	VOLTAGE AND PHASE	PANEL NAMEPLATE INSCRIPTION	MAXIMUM OVERALL PANEL DIM. (INCHES) (H x W x D)
DA-32A-801	480/277V 3Ø, 4W	DA-32A-801 480/277V 3Ø, 4W Distribution Panelboard	55.5 x 20 x 6
DA-32A-802	480/277V 3Ø, 4W	DA-32A-802 480/277V 3Ø, 4W Distribution Panelboard	55.5 x 20 x 6
DA-32A-851	208/120V 3Ø, 4W	DA-32B-851 208/120V 3Ø, 4W Distribution Panelboard	32 x 20 x 6
DA-32A-852	208/120V 3Ø, 4W	DA-32A-852 208/120V 3Ø, 4W Distribution Panelboard	32 x 20 x 6
DA-32A-853	208/120V 3Ø, 4W	DA-32A-852 208/120V 3Ø, 4W Distribution Panelboard	32 x 20 x 6

9 2 1 2 4 1 3 0 5 5 3

THIS PAGE INTENTIONALLY
LEFT BLANK

SECTION 16111
CONDUIT/CABLE SCHEDULE
(SAFETY CLASS 3, RATED FOR SAFETY CLASS 1 DBE)

PART 1 GENERAL

1.1 SUMMARY

This section includes the conduit and cable schedule for construction power for the mechanical site utilities.

1.2 RELATED REQUIREMENTS

Specification Section 16100	Electrical Installation
Specification Section 16110	Electrical Materials and Devices
Specification Section 16905	Electrical Testing

PART 2 PRODUCTS

All material shall be supplied in accordance with Specification Section 16110.

PART 3 EXECUTION

3.1 INSTALLATION

3.1.1 Underground conduit and cable shall be in accordance with Attachment A, Attachment B and Specification 16100, Electrical Installation.

END OF SECTION

9 2 1 2 4 1 3 0 5 5 4

THIS PAGE INTENTIONALLY
LEFT BLANK

U.S. DEPARTMENT OF ENERGY
Hanford Waste Vitrification Plant
Richland, Washington
DOE Contract DE-AC06-86RL10838

ATTACHMENT A

ELECTRICAL CONDUIT SCHEDULE
A160 PACKAGE

FLUOR DANIEL, INC.
Advanced Technology Division
Fluor Contract 8457

Rev. 0

CONDUIT NO.	FOR	FROM			TO			CONDUIT		REMARKS
		EQUIPMENT NUMBER	ASSEMBLY/ DETAIL	PLAN DRAWING	EQUIPMENT NUMBER	ASSEMBLY/ DETAIL	PLAN DRAWING	UNDERGROUND SIZE	ABOVE GROUND SIZE	
B20/001	POWER	MH #L1		H-2-122084	PX-500-003-MC		H-2-122084	2		
B20/002	POWER	MH #L1		H-2-122084	LP-500-006		H-2-122084	2		
B20/003	SPARE	MH #L1		H-2-122084	BLDG. #20		H-2-122084	2		
B20/004	SPARE	MH #L2		H-2-122084	BLDG. #20		H-2-122084	2		
B20/005	POWER	MH #L1		H-2-122084	LP-500-004		H-2-122084	2		
B20/006	SPARE	MH #L1		H-2-122084	BLDG. #20		H-2-122084	2		
B20/007	POWER	MH #L1		H-2-122084	480V. LTG/PWR		H-2-122084	3		
B20/008	SPARE	MH #L1		H-2-122084	BLDG. #20		H-2-122084	2		
B20/009	POWER	MH #L1		H-2-122084	LP-500-002A		H-2-122084	4		
B20/010	POWER	MH #L2		H-2-122084	LP-500-002B		H-2-122084	4		
B20/011	POWER	MH #L1		H-2-122084	LP-500-005A		H-2-122084	2		
B20/012	POWER	MH #L2		H-2-122084	LP-500-005B		H-2-122084	2		
B20/014	POWER	PX-500-003-MC		H-2-122084	PX-500-003	B01	H-2-122084	2		
B20/015	POWER	LP-500-004		H-2-122084	PX-500-004	B01	H-2-122084	2		
B20/016	POWER	LP-500-002A		H-2-122084	PX-500-002A	B01	H-2-122084	4		
B20/017	POWER	LP-500-002B		H-2-122084	PX-500-002B	B01	H-2-122084	4		
B20/018	POWER	LP-500-005A		H-2-122084	PX-500-005A	B02	H-2-122084	2		
B20/019	POWER	LP-500-005B		H-2-122084	PX-500-005B	B02	H-2-122084	2		
B20/023	SPARE	MH #D4		H-2-122084	BLDG. #20		H-2-122084	2		
B20/024	LAN	MH #D4		H-2-122084	BLDG. #20		H-2-122084	2		
B20/025	P.A.	MH #D4		H-2-122084	BLDG. #20		H-2-122084	2		
B20/026	TELEPH.	MH #D4		H-2-122084	BLDG. #20		H-2-122084	2		
B20/027	INSTR.	MH #D3		H-2-122084	20-500-B1	X09	H-2-121200	2		
B20/101	INSTR.	MH #D4		H-2-122084	20-500-X1	X09	H-2-121200	2		
B21/001	POWER	PB #W1		H-2-122085	LP-500-001A		H-2-122085	3		
B21/002	POWER	PB #W2		H-2-122085	LP-500-001B		H-2-122085	3		
B21/003	POWER	PB #W1		H-2-122085	PX-530-013A-MC		H-2-122085	2		
B21/004	POWER	PB #W2		H-2-122085	PX-530-013B-MC		H-2-122085	2		
B21/005	POWER	PB #W2		H-2-122085	DA-32A-802		H-2-122085	3		
B21/006	SPARE	PB #W1		H-2-122085	BLDG. #21		H-2-122085	2		
B21/007	SPARE	PB #W2		H-2-122085	BLDG. #21		H-2-122085	2		
B21/008	POWER	LP-500-001A		H-2-122085	PX-500-001A	B02	H-2-122085	3		
B21/009	POWER	LP-500-001B		H-2-122085	PX-500-001B	B02	H-2-122085	3		
B21/012	CONTROL	PB #W2		H-2-122085	BLDG #21		H-2-122085	2		
B21/013	SPARE	PB #W3		H-2-122085	BLDG. #21		H-2-122085	2		
B21/014	LAN	PB #W3		H-2-122085	BLDG. #21		H-2-122085	2		
B21/015	P.A.	PB #W3		H-2-122085	BLDG. #21		H-2-122085	2		
B21/016	TELEPH.	PB #W3		H-2-122085	BLDG. #21		H-2-122085	2		
B21/101	INSTR.	PB #W3		H-2-122085	BLDG #21		H-2-122085	2		
B23/001	POWER	PB #T2		H-2-122085	BLDG #23		H-2-122085	2		
B23/002	SPARE	PB #T2		H-2-122085	BLDG. #23		H-2-122085	2		
B23/003	SPARE	PB #T2		H-2-122085	BLDG #23		H-2-122085	2		
B23/004	INSTR.	PB #T2		H-2-122085	JB #23-B1		H-2-122089	2		

FOR INFORMATION ONLY

THIS PAGE INTENTIONALLY
LEFT BLANK

U.S. DEPARTMENT OF ENERGY
Hanford Waste Vitrification Plant
Richland, Washington
DOE Contract DE-AC06-86RL10838

FLUOR DANIEL, INC.
Advanced Technology Division
Fluor Contract 8457

Rev. 0

ATTACHMENT B

ELECTRICAL CABLE SCHEDULE
A160 PACKAGE

CABLE NO	FROM		TO		CABLE DATA							SINGLE LINE NO.	VIA
	EQUIP NO. OR LOCATION	PLAN DRAWING	EQUIP NO. OR LOCATION	PLAN DRAWING	VOLT	NO. CABLES PER PHASE	NO. COND	SIZE AWG/ KCMIL	TYPE	LENGTH AG	LENGTH UG		
B21/008P	LP-500-001A	H-2-122085	PX-500-001A	H-2-122085	480	1	3/C	250				H-2-122083	B21/008
B21/009P	LP-500-001B	H-2-122085	PX-500-001B	H-2-122085	480	1	3/C	250				H-2-122083	B21/009
B20/016P	LP-500-002A	H-2-122084	PX-500-002A	H-2-122084	480	1	3/C	350				H-2-122083	B20/016
B20/017P	LP-500-002B	H-2-122084	PX-500-002B	H-2-122084	480	1	3/C	500				H-2-122083	B20/017
B20/015P	LP-500-004	H-2-122084	PX-500-004	H-2-122084	480	1	3/C	12				H-2-122083	B20/015
B20/018P	LP-500-005A	H-2-122084	PX-500-005A	H-2-122084	480	1	3/C	2				H-2-122083	B20/018
B20/019P	LP-500-005B	H-2-122084	PX-500-005B	H-2-122084	480	1	3/C	2				H-2-122083	B20/019
B20/014P	PX-500-003-MC	H-2-122084	PX-500-003	H-2-122084	480	1	3/C	12				H-2-122083	B20/014
SB01/002P	SB-32T-001	H-2-122093	DA-32A-801	H-2-122084	480	1	4/C	2/0				H-2-122083	DB, B20/007
SB01/006P	SB-32T-001	H-2-122093	LP-500-001A	H-2-122085	480	1	3/C	250				H-2-122083	DB, B21/001
SB01/001P	SB-32T-001	H-2-122093	LP-500-002A	H-2-122084	480	1	3/C	350				H-2-122083	DB, B20/009
SB01/004P	SB-32T-001	H-2-122093	LP-500-004	H-2-122084	480	1	3/C	12				H-2-122083	DB, B20/005
SB01/005P	SB-32T-001	H-2-122093	LP-500-006	H-2-122084	480	1	3/C	6				H-2-122083	DB, B20/002
SB01/003P	SB-32T-001	H-2-122093	PX-500-003-MC	H-2-122084	480	1	3/C	12				H-2-122083	DB, B20/001
SB02/006P	SB-32T-002	H-2-122093	BLDG #23	H-2-122085	480	1	4/C	4				H-2-122083	DB, B23/001
SB02/005P	SB-32T-002	H-2-122093	DA-32A-802	H-2-122085	480	1	4/C	4/0				H-2-122083	DB, B21/005
SB02/002P	SB-32T-002	H-2-122093	LP-500-001B	H-2-122084	480	1	3/C	250				H-2-122083	DB, B21/002
SB02/001P	SB-32T-002	H-2-122093	LP-500-002B	H-2-122084	480	1	3/C	500				H-2-122083	DB, B20/010
SB02/003P	SB-32T-002	H-2-122093	PX-530-013A-MC	H-2-122085	480	1	3/C	10				H-2-122083	DB, B21/003
SB02/004P	SB-32T-002	H-2-122093	PX-530-013B-MC	H-2-122085	480	1	3/C	10				H-2-122083	DB, B21/004

THIS PAGE INTENTIONALLY
LEFT BLANK

SECTION 16150
MOTORS - INDUCTION
(SAFETY CLASS 3)

PART 1 GENERAL

1.1 SUMMARY

This specification covers the technical requirements for standard polyphase electrical induction motors ranging in size from 1/2 horsepower to 150 horsepower, for vertical and horizontal drive applications.

1.2 REFERENCES

The publications listed below form a part of this specification to the extent referenced. The publications are referred to in the text by the basic designation only.

ANTI-FRICTION BEARING MANUFACTURERS ASSOCIATION (AFBMA)

AFBMA 9	1990 Load Ratings and Fatigue Life for Ball Bearings
AFBMA 11	1990 Load Ratings and Fatigue Life of Roller Bearings

INSTITUTE OF ELECTRICAL AND ELECTRONIC ENGINEERS (IEEE)

IEEE 43	1974 Recommended Practice for Testing Insulation Resistance of Rotating Machinery
IEEE 112	1984 Standard Test Procedure for Polyphase Induction Motors and Generators
IEEE 114	1982 Standard Test Procedure for Single-Phase Induction Motors

NATIONAL ELECTRICAL MANUFACTURERS ASSOCIATION (NEMA)

NEMA MG1	1987 (Rev. 1-1989) Standards for Motors and Generators
NEMA MG13	1984 Frame Assignments for Alternating Current, Integral-Horsepower Induction Motors

9 2 1 2 4 1 3 0 5 5 7

1.3 **SUBMITTALS**

Submit the following in accordance with the Vendor Drawing and Data Requirements section of the Order/Subcontract.

1.3.1 Speed/torque and speed/current curves.

1.3.2 Certification of Conformance of motor performance to requirements of this specification and specific requirements of driven equipment narrative specifications and data sheet DS-1, Attachment B.

1.3.3 Motor outline drawings, shaft dimensions, and weight.

1.3.4 Detail drawings of main and/or auxiliary junction boxes.

1.3.5 Completed insulation resistance readings sheet, Attachment A.

1.3.6 Completed electric motor specification sheet, Attachment B, DS-1.

1.3.7 A list of manufacturer's recommended spare parts for one (1) year's operation. Include sufficient data to permit procurement from the original manufacturer or any subsupplier.

1.3.8 Installation, operation, and maintenance manuals. Maintenance manuals shall include a lubrication schedule with name, quantity and frequency of lubrication.

1.3.9 Inspection checklist in accordance with Section 3.2.4.

1.4 **PROJECT OR SITE ENVIRONMENTAL CONDITIONS**

1.4.1 Climatic and Geographic Site Conditions

A. Site Elevation 714 feet above sea level

B. Barometric Pressure 14.3 psia

C. Outside Design Temperature

1) Maximum Design Temperature 110°F

2) Minimum Design Temperature -20°F

3) Wet Bulb Design Temperature 68°F

D. Inside Design Temperature

1) Maximum Design Temperature 110°F

9212413055 8

2) Minimum Design Temperature 50°F

3) Wet Bulb Design Temperature 68°F

PART 2 PRODUCTS

2.1 MATERIALS AND EQUIPMENT

The following requirements apply to all electrical motors furnished in accordance with this specification. Special electric motor requirements established by the driven equipment specifications and/or Contract Drawings shall take precedence over this specification.

GENERAL REQUIREMENTS

Electric motors and motor accessories furnished in accordance with this specification shall be in full compliance with NEMA MG1 and MG13 Standards and Attachment B of this specification.

A. Motor Rating

The Seller shall be fully responsible for specifying electric motor horsepower, speed, and torque characteristics for each motor furnished as part of the Seller's driven equipment package.

B. Electrical Power Supply

Each electric motor furnished in accordance with this specification shall be designed for 480V/3 Ph/60 Hz or 120V/1 Ph/60 Hz power supply with full-voltage across-the-line starting and rated for continuous duty. The main power junction box shall be large enough to accommodate oversized incoming power conductors and conductors for externally mounted power factor correction capacitors.

C. Grounding

Each electric motor shall include provisions for motor frame grounding, utilizing a hex head bolt tapped into the motor frame from within the main junction box.

D. Space Heaters

1) Electric motor space heaters shall not be provided unless otherwise specified by the driven equipment specifications and/or Contract Drawings.

2) When driven equipment specifications and/or Contract Drawings establish the requirement for electric motor space heaters, they shall operate from 120V/1 Ph/60 HZ power supply with a maximum sheath temperature of 392°F. Space heater electrical leads shall be brought out to a separate junction box mounted to the motor on the opposite side from the main junction box.

E. Elastomers

Elastomer seals and gaskets shall be compatible with the motor application and/or operating environment defined by the driven equipment specifications or Contract Drawings.

2.2 FABRICATION AND MANUFACTURE

2.2.1 Electrical motors furnished in accordance with this specification shall be NEMA MG1, Normal Starting Torque, Low Slip, Electrical Type A, Design B, for polyphase motors and Design L for single-phase motors, with cast iron or fabricated carbon steel motor frames.

A. Service Factor

Electric motors shall be designed and selected with a service factor of 1.15 for polyphase motors and 1.25 for single-phase motors unless otherwise established by the driven equipment specifications and/or Contract Drawings.

B. Insulation

Insulation systems for motors on general services shall be Class F or better per NEMA MG1. Motor leads shall be copper with compression lugs, both sized for 125 percent load current at motor cooling air discharge temperature.

C. Temperature Rise

Temperature rise per NEMA MG1 shall not be greater than Class B, 176°F rise above a maximum 110°F ambient temperature.

D. Seals

Motors shall be equipped with suitable shaft seals to prevent moisture, dirt, and corrosive agents from entering the motor enclosure and bearings along the shaft.

9 2 1 2 4 1 3 0 5 5 0

2.2.2 Bearings

A. General service motors shall be furnished with bearing housings designed for re-lubrication of anti-friction bearings, with provisions for flushing out the old lubricant as the new lubricant is added.

B. Antifriction bearings shall be in accordance with the AFBMA Standards 9 and 11. Each electric motor nameplate shall show the data required by NEMA MG1 and shall include both front and rear AFBMA bearing part numbers.

C. Ball bearings and roller bearings shall be designed and constructed for 100,000 continuous hours, L-10 minimum life in the specified service as defined by AFBMA Standards 9 and 11, and shall be based on continuous operation.

D. Extended bearing life periods, when required, will be specified by the driven equipment specifications and/or Contract Drawings.

E. The design of thrust bearings for vertical motors shall be suitable for the thrust load imposed by the driven equipment. Bearings shall be rated for 20,000 continuous hours L-10 life.

2.2.3 Balancing and Vibration Criteria

A. Motors shall be dynamically balanced. Welding or soldering to effect balancing is unacceptable. Parent metal shall be removed to effect balance without affecting the structural strength of the rotating element.

B. Maximum vibration amplitude (peak to peak) as measured on the rotor shaft shall not exceed 0.001 inches for 3,600 rpm motors, 0.0015 inches for 1,800 rpm motors, 0.002 inches for 1,200 rpm motors and 0.0025 inches for 900 rpm and slower motors. For vibration amplitude measurements, motors shall be operated at rated operating speed and frequency with a one-half key installed in the key seat. Motors shall be mounted on isolators during vibration amplitude measurements, in accordance with NEMA MG1.

2.3 LABELING

In addition to the identification plate, each electric motor and each electric motor accessory shall be supplied with a stainless steel tag containing the equipment name and equipment number as shown in the driven equipment specifications and the minimum

motor data requirements of NEMA MG1 Standards. Each tag shall be permanently affixed.

2.3.1 Delivery, Storage and Handling

A. All equipment shall be delivered in the manufacturer's original unopened protective packaging.

B. The equipment shall be stored and handled in such a manner as to keep it clean and free from damage and/or deterioration.

2.4 PACKAGING

Preparation for shipment and packing may conform to the manufacturer's standards and as a minimum shall provide protection against corrosion and damage from normal handling and storage. Minimum preparation shall include the requirements listed below.

A. Machined surfaces, threads, bearings and bearing housings shall be protected during shipment by application of grease or other suitable rust inhibiting compound.

B. Threaded connections and tapped holes shall be capped or plugged using compatible materials to prevent thread damage.

C. The motor shall be fully protected against moisture penetration to the electrical compartments and winding.

D. All motors (less electrical lead cables) shall be installed for shipment.

E. Mechanical seals and other sealing devices shall be installed for shipment.

F. Bracing, supports, and rigging connections shall be provided to prevent damage during shipment, lifting, and unloading.

G. Separate or loose parts shall be completely boxed and attached to the main item to be shipped as a unit. All shipping boxes shall be identified by the Seller's order number, equipment number, and equipment description by ink, paint, or other indelible material.

H. One complete set of installation, operating and maintenance instructions shall be packed with each assembly.

2.5 COATINGS

After completion of all fabrication procedures, the external surfaces of each electric motor shall be thoroughly cleaned of all

9 2 1 2 4 1 3 0 5 6 2

foreign material, including rust, and manufacturer's standard prime and finish paint or coatings shall be applied. Unless specified otherwise, stainless steel, nickel, brass, copper, monel, aluminum, hastelloy, lead, galvanized steel, plastics, elastomers, glass surfaces shall not be painted.

2.6 **SOURCE TESTING**

A. Motor Manufacturer Tests

Each electric motor furnished in accordance with this specification shall be tested by the motor manufacturer prior to shipment. These tests shall include, but shall not be limited to, High-Potential Tests in accordance with NEMA MG1, Part 3 and Routine Tests in accordance with IEEE Std. 112 or IEEE Std. 114 as applicable. The Seller shall submit motor manufacturer's certified copies of all motor test results.

B. Resistance Tests

The Seller shall subject all electric motors furnished in compliance with this specification to insulation resistance tests in accordance with IEEE Std. 43. Insulation resistance measured during these tests shall not be less than 5 megohms. The Seller shall submit completed copies of Attachment A for each electric motor furnished.

C. Performance Test

All required electric motor performance tests shall be conducted in accordance with the applicable driven equipment specification. Performance testing, herein defined as those additional tests referenced in Section 3 of both IEEE Std. 112 and IEEE Std. 114, are not within the scope of this specification.

PART 3 EXECUTION

3.1 **PREPARATION**

3.1.1 Before installation the Seller shall inspect each electric motor and verify the following:

A. Each electric motor is complete with all accessories.

B. The size and orientation of electrical junction boxes are of the size and arrangement specified on the driven equipment specifications and/or Contract Drawings.

9 2 1 2 4 1 3 0 5 6 3

C. Inspect location and size of mounting holes.

D. Verify that each electrical motor is provided with a nameplate in accordance with Section 1.03.

3.2 INSTALLATION, APPLICATION AND ERECTION

3.2.1 Prior to installation, all equipment shipping braces, supports, packing, threaded connection protecting devices, flange protecting devices, and moisture absorbent material shall be removed. Equipment shall be thoroughly cleaned and all shipping protective greases and rust inhibiting compounds removed.

3.2.2 Electric motors will be installed in accordance with driven equipment specifications and Contract Drawings.

3.2.3 To ensure protection from the environment, the Seller shall paint or coat each piece of equipment where coating has been disturbed with matching paint and/or coatings.

3.2.4 Inspection after Installation

A. Preparation of Inspection Checklist

The Seller shall prepare a checklist for the inspection of each electric motor to assure compliance with this specification and the Contract Drawings. This checklist shall include as a minimum all steps of inspection and checkout listed in the following section.

B. Steps of Inspection

1) Each electric motor is installed in accordance with driven equipment specifications, Contract Drawings, and this specification.

2) Equipment has been leveled, aligned and is securely anchored.

3) Equipment has been installed to provide access and pull space for removing motor bearings, seals, rotor, and motor frame.

4) Equipment is clean, undamaged, and free of foreign material.

5) Bearings are aligned and lubricated in accordance with the manufacturer's recommendation and Section 2.03 of this specification.

9212413056 4

6) Each electric motor has been checked for freedom of rotation.

7) Equipment has been painted as required.

3.3 FIELD QUALITY CONTROL

Inspection and examination to be in accordance with Paragraph 3.2.3.

END OF SECTION

THIS PAGE INTENTIONALLY LEFT BLANK

9 2 1 2 4 1 3 0 5 6 5

THIS PAGE INTENTIONALLY
LEFT BLANK

ATTACHMENT A

INSULATION RESISTANCE READINGS
ROTATING ELECTRICAL EQUIPMENT

Description _____ Area _____

Test Equipment _____ Ref. ____ Rev. No. _____

Calibration Date _____ Ref. Spec/Section _____

EQUIPMENT NO.	ENVIRONMENTAL CONDITIONS		INSUL. RESIST. Ø-GRD. [Megohms]	TEST VOLTAGE [Megohms]	VISUAL CHECK
	AMBIENT TEMP [°C]	RELATIVE HUMIDITY			

SELLER'S REPRESENTATIVE _____ DATE _____

9 2 1 2 4 1 3 0 5 5 6 6

THIS PAGE INTENTIONALLY
LEFT BLANK

9 2 1 2 4 1 3 0 5 6 7

ATTACHMENT B

FLUOR DANIEL
EQUIPMENT SPECIFICATIONS

U. S. Department of Energy
Hanford Waste Vitrification Plant
Richland, Washington
DOE Contract DE-AC06-86RL10838

ELECTRIC MOTORS

DS - 1

NO.	BY / DATE	REVISION

SHEET NO. 1			REV. 0
DATE 12-05-91	CONTRACT 845734		
MANUFACTURER			
FLUOR P.O.			
BY JI	CHK'D CD	APPR'D	

ALL ITEMS SHALL COMPLY WITH GENERAL SPECIFICATION SHEETS: *A160 - 16150*

									REV
Motor Tag Number(s)	PX-500-001		PX-500-002	PX-500-003	PX-500-004		PX-500-005	PX-530-013	
Manufacture / Serial No.	A / B	/	A/ B	/	/	/	A / B	A / B	
Power Rating KW / HP	93 / 125	/	112 / 150	/ 0.5	2.2 / 3.0	/	37 / 50	/ 5	
Service Factor	1.15		1.15	1.0	1.15		1.15	1.15	
Speed Synch. / Full Load, RPM	1800 / 1770	/	1800 / 1770	/ 1750	3600 / 3500	/	3600 / 3530	/ 1750	
Bearing Type	BALL		BALL	BALL	BALL		BALL	BALL	
BEARING LUBRICATION	GREASE		GREASE	GREASE	GREASE		GREASE	GREASE	
Voltage, Phase, Frequency	460, 3, 60		460, 3, 60	460, 3, 60	460, 3, 60		460, 3, 60	460, 3, 60	
Full Load Current AMP	142		171		3.85		57		
Locked Rotor Current 100%V / 80%V	907/	/	1085/	/	32.0/	/	362/	/	
Acceleration Time (Incl Load) 100%V / 80%V	/	/	/	/	/	/	/	/	
Locked Rotor Stall Time (Cold), Seconds	20		21		16		26		
Locked Rotor Stall Time (Hot) 100%V /80%V	12 /	/	12 /	/	9 /	/	15 /	/	
Locked Rotor Torque (% FL)	408		490		7.2		89.3		
Breakdown Torque (% FL)									
Efficiency A. Full Load	92.4		92.4		82.5		91.0		
B. 3/4 Load	93.5		93.5		89.0		90.5		
C. 1/2 Load	94.1		94.1		81.0		89.0		
Power Factor A. Full Load	94.1		88.8	73	88.5		91.0		
B. 3/4 Load	89.0		87.6		85.0		90.0		
C. 1/2 Load	88.9		83.7		76.5		86.0		
D. Locked Rotar									
Sound Pressure Level at 1 / Meter in DBA	85		85	85	85		85	85	
Space Heaters Volts /Phases / Watts	/ /	/ /	/ /	/ /	/ /	/ /	/ /	/ /	
Rotation (Facing End Opposit Drive Shaft)									
Insulation	CLASS - B		CLASS - B	CLASS - B			CLASS - B		
Enclosure Type / Motor Mounting (H or V)	TEFC / H	/.	TEFC / H	TEFC / H	TEFC/ H	/	TEFC / H	TEFC/H	
Frame	405TS		444TS	52 - 146	56C		326T	184T	
Net Weight Kg / LBS	/926	/	/1255	/23	/34	/	/452	/82	

REVISION

REV	ORIG BY	CHCKD. BY	DESCRIPTION
1			
2			
3			
4			

SEEM.FRM 10-15-91 FILE: *JI5.REC.1* *12-05-91*

THIS PAGE INTENTIONALLY
LEFT BLANK

SECTION 16905
ELECTRICAL TESTING
(SAFETY CLASS 3 RATED FOR SAFETY CLASS 1 DBE)

PART 1 GENERAL

1.1 SUMMARY

1.1.1 This section of the specification sets forth the electrical testing and inspection procedures required for the acceptance of electrical components and/or systems as described in the sections that follow.

1.1.2 The purpose of the specified tests and inspections is to determine that each component is in compliance with the Contract Drawings and specifications.

1.1.3 It is the intent of these procedures to ensure that all workmanship, materials and the manner and method of erection and installation conform to manufacturer's instructions, Contract Drawings and specifications.

1.1.4 The Seller shall perform and supervise all tests unless specifically noted otherwise herein or on the Contract Drawings. The Seller shall furnish all test equipment required for the tests performed by him and shall be responsible for providing such safety measures as are required for each test.

1.2 RELATED REQUIREMENTS

Specification Section 16100 Electrical Installation

Specification Section 16110 Electrical Materials and Devices

1.3 SUBMITTALS

Submit the following in accordance with the Vendor Drawing and Data Requirements section of the Order/Subcontract.

1.3.1 Written procedures for all inspection and testing to be performed.

1.3.2 Inspection reports for underground cable installation.

1.3.3 Inspection reports for lighting systems.

1.3.4 Test and inspection reports for cables and wires.

9 2 1 2 4 1 3 0 5 5 6 8

1.3.5 Calibration and Testing Equipment Standards

The Seller shall submit to the Buyer for approval, a complete listing of proposed calibrating and testing equipment, including calibration standards with current certification from the National Institute of Standards and Technology. Seller has the option of using equipment in his possession with valid national Bureau of Standards Certification of equipment or can use the service of a testing lab with valid National Bureau of Standards Certification of equipment.

1.4 **PROJECT OR SITE ENVIRONMENTAL CONDITIONS**

1.4.1 Climatic and Geographic Site Conditions

A. Site Elevation 714 feet above sea level

B. Barometric Pressure 14.3 psia

C. Outside Design Temperature

1) Maximum Design Temperature 110°F

2) Minimum Design Temperature -20°F

1.4.2 Operating Environment

A. Normal Temperature -20° to 110°F

PART 2 PRODUCTS

2.1 **MATERIALS AND/OR EQUIPMENT**

2.1.1 Furnish all materials and equipment required to perform inspection and testing in accordance with this specification section and other related contract documents.

2.1.2 All equipment used for testing shall be calibrated within six months prior to testing, and Seller shall provide proof of calibration.

2.1.3 All calibrating and testing equipment must be checked every six months, except idle equipment which must be calibrated prior to usage, to the standards for the project, and certified as the equipment has been checked against the standard for the project, for accuracy, dated and initialed by the certifier. The calibration results must be logged and available to the Buyer for inspection.

2.1.4 Any equipment failing the standards test must not be used until repaired and re-standardized. All calibrating and testing equipment shall have valid certified label affixed to the equipment during usage. The label shall be affixed in a prominent location. The Buyer can, at his discretion, require the calibrating and testing equipment to be checked to the standards. Standards must not be used as calibration and testing devices in the field.

2.1.5 The Seller shall be required, every six months, to check the standards for the project to calibration standards with current certification from the National Institute of Standards and Technology.

2.1.6 Seller shall be responsible for ensuring that the accuracy of the calibration equipment is equal to (or better) than the accuracy of the equipment to be calibrated/tested.

2.1.7 Seller shall maintain a calibration log showing date, location, name of lab (if applicable), certification number and name of certifier. Log must be kept current and available to the Buyer for inspection.

9 2 1 2 4 1 3 0 5 7 0

PART 3 EXECUTION

3.1 PREPARATION

3.1.1 The Seller shall notify the Buyer at least 24 hours prior to test, advising him of the test to be performed, and the scheduled date and time of test.

3.1.2 Seller shall submit all test procedures to Buyer for approval prior to testing.

3.1.3 All test voltages listed in this specification shall be checked against manufacturer's instructions and adjusted as applicable.

3.2 INSTALLATION, APPLICATION AND ERECTION

Refer to Specification Section 16100, Electrical Installation.

3.3 FIELD QUALITY CONTROL

3.3.1 General

3.3.1.1 All wiring and connections shall be tested for continuity before fixtures, devices and equipment are connected.

3.3.2 Inspection

The Seller shall visually inspect the installation to verify conformance to this specification and the Contract Drawings. This inspection shall take into consideration, for example: proper equipment and conductor identification, verification of completeness, accurate placement, proper attachment to supports and tightness of connection.

3.3.3 Wire and Cable Tests

3.3.3.1 Continuity Test

A. Test for continuity, correctness of wiring and verify correct identification on all conductors installed.

B. Test shall be made with an ohmmeter.

3.3.3.2 Insulation Resistance Test

A. All conductors shall be given an insulation resistance test using a megohmmeter.

B. Test shall be made with the lugs in place and conductors disconnected at the equipment. Test shall be made between one conductor and ground with the other conductors grounded. Each conductor shall be tested in the same manner. The voltage shall be applied and readings taken every minute until three equal and consecutive readings are obtained.

C. Disconnected wires shall be safety tagged. Disconnect devices (circuit breakers, switches, etc.) will be safety tagged and locked open.

D. Test voltages and minimum acceptable insulation resistance shall be as follows:

Insulation Voltage	Test Voltage	Min. Insulation Resistance
300 volt ac	500 Vdc	10 megohms
600 volt ac	1000 Vdc	10 megohms

3.3.3.3 Test reports shall be submitted to Buyer.

3.3.4 Grounding

3.3.4.1 Equipment Ground Buses

3.3.4.1.1 Equipment ground buses in electrical equipment, such as motor control centers, distribution panels, etc. shall be tested to

9 2 1 2 4 1 3 0 5 7 1

assure low resistance bolted connection between bus and equipment enclosure.

3.3.4.1.2 Resistance readings shall be taken between the equipment ground bus and the equipment enclosure. The maximum acceptable resistance shall be 0.01 ohm.

3.3.4.2 Equipment Ground Conductors

3.3.4.2.1 A "Kelvin Bridge" shall be connected between the equipment ground bus (to which the equipment ground conductor is connected) and the nearest building ground bus.

3.3.4.2.2 The readings taken will indicate the resistance between the equipment ground bus and the building ground. The maximum permissible resistance shall be 0.1 ohm.

3.3.5 Panelboards

3.3.5.1 Mechanical

A physical check of the panelboard interior shall be made to verify clearances between live electrical parts, isolation of phase and neutral buses from cabinet and tightness of all mechanical connections.

3.3.5.2 Trip Ratings

3.3.5.2.1 Check main and branch breaker trip element ratings for compliance with the panel schedule. Check all breakers for correct mechanical and electrical operation.

3.3.5.2.2 A test of breaker trip settings will be required for 10 percent of the breakers for each of those panelboards listed on Attachment B of Specification Section 16110. Tests will be performed on a single-pole basis. Each circuit breaker must perform in accordance with its time-current curve or be replaced. The replacement breaker must pass trip setting test.

3.3.5.3 Wiring

Check that all wiring terminations and sizes of conductors are in accordance with the Contract Drawings and that all ground conductors terminate on the panelboard ground bus. Check that all wire connections are properly made and tightened. Check that all conductors have correct color code and circuit identification.

3.3.5.4 Phasing

Check phasing of incoming 3-phase feeder and branch circuit terminations. Correct phase identification shall be A-B-C, left

to right, top to bottom and front to back, as viewed from the front of the equipment.

3.3.5.5 Circuit

Check out and test the operation of panelboards with associated loads. Tests shall include operation of remote circuit switches.

3.3.6 Lighting Fixtures

3.3.6.1 Check that only specified conductors are run inside lighting fixtures.

3.3.6.2 Lighting fixtures shall be given an operational test. Fixtures must operate from designated circuit breakers and/or switches. All lenses and louvers must be clean, and all local switches must function properly.

3.3.6.3 Check lighting with battery packs and exit signs for correct operation in normal/emergency modes.

3.3.7 Receptacles

3.3.7.1 120 Volt Receptacles

3.3.7.1.1 A check of ten percent of receptacles shall be made to ensure that neutral and ground wires are connected in accordance with the Contract Drawings.

3.3.7.1.2 Ten percent of 120 volt receptacles shall be given an equipment ground impedance test. The maximum allowable impedance shall be 1.0 ohms.

CAUTION: This test shall be performed at each receptacle with no loads plugged into other receptacles sharing the equipment ground conductor.

3.3.7.1.3 Receptacle checks shall be made by the Seller in the presence of the Buyer. Any receptacles not passing the required tests shall be corrected by the Seller and then verified by the Buyer as being acceptable.

3.3.7.2 Power Receptacles

3.3.7.2.1 Three-phase, 4-wire power receptacles shall be connected so that phase sequence of the circuit is counterclockwise as viewed looking into the receptacle.

3.3.7.2.2 Phase sequence shall be checked by using a phase indicating meter. Any receptacles found incorrectly wired shall be corrected by the Seller and then verified by the Buyer as being acceptable.

9212413057 3

3.3.8 Dry-Type Transformer

3.3.8.1 In setting up the testing equipment, special safety precautions should be taken regarding grounding of this equipment and the transformer to be tested. The test equipment and the transformer shall be grounded to the same ground.

3.3.8.2 Test reports shall include the following:

A. Complete identification of the transformer.

B. Megger readings.

3.3.8.3 Transformers shall be dried out in accordance with manufacturer's instructions before they are energized if insulation resistance measurements indicate the presence of moisture.

3.3.8.4 Mechanical

Transformers shall be checked for tightness of external structural members and mechanical joints in order to minimize audible sound levels. All ground connections shall also be checked.

3.3.8.5 Insulation Resistance

3.3.8.5.1 Transformers shall be given an "Insulation Resistance Test" using a megohmmeter.

3.3.8.5.2 The voltage shall be applied between: Each winding and ground, each winding to winding. Test voltages and minimum acceptable resistance readings are as follows:

Equipment	Test Voltage	Minimum Reading
480 volt winding	1000	2 megohms
120/208 volt winding	1000	2 megohms

3.3.8.5.3 Minimum resistance readings shall be as listed above unless recommended otherwise by transformer manufacturer.

3.3.8.5.4 The voltage shall be applied for a minimum of one minute until the resistance reading reaches a constant value.

3.3.9 Rotating Equipment

Before terminating wires, determine motor rotation with phase rotation indicator, establish the plant phasing sequence and connect motor accordingly. Bump motor to verify correct rotation.

3.3.10 Electrical Heat Tracing

Insulation resistance testing shall be performed before and after the installation of the thermal insulation using a 500 Vdc megohmmeter. Minimum acceptable resistance is 10 megohms.

3.3.11 Operation Tests

Upon completion of work, the Seller shall demonstrate the operation of all electrical components and/or systems.

3.4 **CLEANING**

Clean and remove all debris and equipment from the job site after completion of testing.

END OF SECTION

9 2 1 2 4 1 3 0 5 7 5

SECTION 17703
INSTRUMENT PIPING MATERIALS

PART 1 GENERAL

1.1 SUMMARY

This section includes the technical requirements for the furnishing of instrument piping and mounting materials for the mechanical site utilities instrumentation.

1.2 REFERENCES

The publications listed below form a part of this specification to the extent referenced. The publications are referred to in the text by the basic designation only.

AMERICAN NATIONAL STANDARDS INSTITUTE (ANSI)

ANSI B1.1	1989 Unified Inch Screw Threads (UN and UNR Thread Form)
ANSI B1.20.1	1983 Pipe Threads, General Purpose (Inch)
ANSI B16.11	1980 Forged Steel Fittings, Socket-Welding and Threaded
ANSI B31.1	1989 Power Piping
ANSI B31.3	1990 Chemical Plant and Petroleum Refinery Piping
ANSI B36.19M	1985 Stainless Steel Pipe

AMERICAN PETROLEUM INSTITUTE (API)

API STD 598	1990 Valve Inspection and Testing

AMERICAN SOCIETY FOR TESTING AND MATERIALS (ASTM)

ASTM A36/A36M	1989 Standard Specification for Structural Steel
ASTM A53	1990 Standard Specification for Pipe, Steel, Black and Hot-Dipped, Zinc-Coated Welded and Seamless (Revision A)

9 2 1 2 4 1 3 0 5 7 6

ASTM A123	1989 Standard Specification for Zinc (Hot-Dip Galvanized) Coatings on Iron and Steel Products
ASTM A153	1982 Standard Specification for Zinc Coating (Hot-Dip) on Iron and Steel Hardware (R1987)
ASTM A182/A182M	1990 Standard Specification for Forged or Rolled Alloy-Steel Pipe Flanges, Forged Fittings, and Valves and Parts for High-Temperature Service
ASTM A262	1986 Standard Practices for Detecting Susceptibility to Intergranular Attack in Austenitic Stainless Steels
ASTM A269	1990 Standard Specification for Seamless and Welded Austenitic Stainless Steel Tubing for General Service
ASTM A312/A312M	1991 Standard Specification for Seamless and Welded Austenitic Stainless Steel Pipes
ASTM A403/A403M	1991 Standard Specification for Wrought Austenitic Stainless Steel Piping Fittings
ASTM A500	1989 Standard Specification for Cold-Formed Welded and Seamless Carbon Steel Structural Tubing in Rounds and Shapes
ASTM A570/A570M	1990 Standard Specification for Steel, Sheet and Strip, Carbon, Hot-Rolled, Structural Quality

MANUFACTURERS STANDARDIZATION SOCIETY OF THE VALVE AND FITTINGS INDUSTRY, INC. (MSS)

MSS SP-25	1978 Standard Marking System for Valves, Fittings, Flanges and Unions (R 1988)

1.3 RELATED REQUIREMENTS

Specification Section 17704	General Instrumentation Installation and Testing

9 2 1 2 4 1 3 0 5 7 7

1.4 **DEFINITIONS**

NPT - National Pipe Thread

PSIA - Pounds per Square Inch Absolute

PSIG - Pounds per Square Inch Gauge

TFE - Polytetrafluoroethylene (Teflon or Equal)

1.5 **SYSTEM DESCRIPTION**

Material furnished under this specification section conforms to ANSI B31.1 - for steam and condensate systems; and ANSI B31.3 for all other systems.

1.6 **SUBMITTALS**

Submit the following in accordance with the Vendor Drawing and Data Requirements section of the Order/Subcontract.

1.6.1 Catalog information: Including overall dimensions, weight, model number, and connection sizes.

1.6.2 Certified drawings: Fully dimensioned and detailed component, assembly and outline drawings pertinent to each item, as required by specification section requirements.

1.6.3 The Seller shall provide a list of materials to be incorporated in the work. The list of materials shall be supported by sufficient descriptive material to demonstrate conformance to the specification section requirements.

1.6.4 Detailed parts list including manufacturer's part numbers.

1.6.5 Certified Mill Test Reports for all pressure containing and/or Wetted parts. Certificates of Conformance may be substituted for Certified Mill Test Reports for stainless steel components.

1.6.6 Test reports of corrosion rates for all stainless steel piping tested in accordance with ASTM A262, Practice C.

1.6.7 Inspection/Test Report in accordance with Part 3 of this specification section.

9 2 1 2 4 1 3 0 5 7 8

1.7 **PROJECT OR SITE ENVIRONMENTAL CONDITIONS**

1.7.1 Climatic and Geographic Site Conditions

A. Site Elevation 714 feet above sea level

B. Barometric Pressure 14.3 psia

C. Outside Design Temperature

1) Maximum Design Temperature 110°F

2) Minimum Design Temperature -20°F

3) Wet Bulb Design Temperature 68°F

1.7.2 Operating Environment

A. Normal Temperature -20° to 110°F

B. Relative Humidity Not controlled

PART 2 PRODUCTS

2.1 **MATERIALS AND/OR EQUIPMENT**

2.1.1 General Requirements

2.1.1.1 Instrument piping material classes and service symbols as listed below conform to service designations as shown on the Contract Drawings.

2.1.1.2 All stainless steel materials in this specification require submittal of Certified Mill Test Reports or Certificates of Conformance and results of corrosion testing per ASTM A262, Practice C.

2.1.1.3 Unless otherwise specified, all pressures and temperatures listed are design conditions.

2.1.1.4 Instrument supports requiring galvanizing after fabrication shall be hot-dipped galvanized in accordance with ASTM A123.

9 2 1 2 4 1 3 0 5 7 9

2.1.1.5 Instrument Piping Material Classes/Services Index

Instrument Class	Material	Service
ZA	316 Stainless Steel	DRX - Clean Drain FWX - Fire Water HPS - High Pressure Steam IAX - Instrument Air LPW - Process Water RWX - Raw Water SWX - Sanitary Water
ZJ	316 Stainless Steel	IAX - Instrument Air (Non Process)
ZZ	Carbon Steel, Galvanized Steel, Stainless Steel	Instrument and Tubing Support

9212170580

2.2 INSTRUMENT MATERIAL

2.2.1 Instrument Material Class ZA

Material:	316 Stainless Steel
Temperature Limit:	-20°F to 400°F
Rating:	3000#
Maximum Pressure:	Per ANSI B16.11
Construction:	3/4" and smaller - screwed and/or compression type tube

Items	Size	Description
Tubing	1/2"	Seamless, 316 stainless steel tubing, ASTM A269, .049" average wall thickness, hardness not to exceed Rockwell B80.
	1/2" and smaller	Square head plug, forged 316 stainless steel, screwed, ASTM A182/A182M, GR F316, ANSI B16.11. Threads conforming to ANSI B1.20.1.
Tube Fittings	3/4" and smaller	316 stainless steel, compression type with double ferrules. Pipe threads conforming to ANSI B1.20.1. (Swagelok or equal)
Pipe Nipples	1/2"	Seamless, schedule 80S 316 stainless steel, ASTM A312/A312M, Grade TP316. Threaded ends, where applicable, shall conform to ANSI B1.20.1.
Gauge Siphon	1/2"	Gauge siphon, 1500#, 316 stainless steel, inner and outer tubes 303 stainless steel.
Needle Valve	1/2"	Needle, 3000#, 316 stainless steel, soft seat, inlet connection 1/2" male NPT, outlet connection 1/2" female NPT. Body and Bonnet: 316 stainless steel Stem: 316 stainless steel Seat: Peek Packing: TFE

Instrument Material Class ZA (Continued)

VALVES

Items	Size	Description
Bleed Plug	1/2"	Bleed plug, 316 stainless steel body and bonnet, 316 stainless steel stem, TFE packing, peek seat material, inlet connection 1/2" male NPT. Body and Bonnet: 316 stainless steel Stem: 316 Stainless Steel Seat: Peek Packing: TFE
Manifold Valve	1/2"	2-valve manifold, 1 block valve and 1 bleed valve, flanged x screwed, 1/2" female NPT connections. Body and Bonnet: 316 stainless steel Stem: 316 Stainless Steel Seat: Peek Packing: TFE Accessories: Mount bracket (for use on static pressure Δp style transmitters)
Manifold Valve	1/2"	5-valve manifold, 2 block valves, 1 equalizing valve and 2 calibration valves and 2 test elbows, screwed x screwed, 1/2" female NPT connections. Body and Bonnet: 316 stainless steel Stem: 316 Stainless Steel Seat: Peek Packing: Teflon Accessories: Mount bracket
Manifold Valve	1/2"	5-valve manifold, 2 block valves, 1 equalizing valve and 2 calibration valves and 2 test elbows, flanged x screwed, 1/2" female NPT connections. Body and Bonnet: 316 stainless steel Stem: 316 Stainless Steel Seat: Peek Packing: Teflon Accessories: Mount Bracket

9 2 1 2 4 1 3 0 5 8 2

Instrument Material Class ZA (Continued)

VALVES

Items	Size	Description

CONSTRUCTION DETAILS

Pipe Bends:	None
Tubing Bends:	Use tubing bends in place of tubing fittings wherever possible. All tubing bends to be formed with tools designed for the tubing diameter. Minimum tubing bends shall be as follows: 1-1/2" radius bends for 1/2" tubing
Thread Compound:	Use an anaerobic pipe thread sealant on all pipe threads.

Note 1: Do not thread tubing. Use compression type fittings.

Note 2: Tubing size is average outside diameter, not nominal size.

Instrument Material Class ZJ

Material: 316 Stainless Steel Temperature Limit: 150°F

Rating: 3000#

Maximum Pressure: ANSI B16.11

Construction: 1-1/2" and smaller - screwed and/or compression type tube

Items	Size	Description
Pipe	1-1/2" and smaller	Seamless, schedule 80S 316 stainless steel, ASTM A312/A312M, Grade TP316.
Tubing	1/4"	Seamless 316 stainless steel tubing, ASTM A269, 035" average wall thickness, hardness not to exceed Rockwell B80.
	1/2"	Seamless 316 stainless steel tubing, ASTM A269, .049" average wall thickness, hardness not to exceed Rockwell B80.
Pipe Fittings	1-1/2" and smaller	3000# forged 316 stainless steel, screwed, ASTM A182/A182M, ANSI B16.11. Threads conforming to ANSI B1.20.1.
	1-1/2" and smaller	Union, 3000# forged 316 stainless steel, screwed, ASTM A182/A182M, ANSI B16.11. Threads conforming to ANSI B1.20.1.
	1-1/2" and smaller	Square head plug, forged 316 stainless steel, screwed, ASTM A182/A182M, Grade F316, ANSI B16.11. Threads conforming to B1.20.1.
Pipe Nipples	1-1/2" and smaller	Seamless, Schedule 80S 316 stainless steel, ASTM A312/A312M, Grade TP316. Threaded ends, where applicable, shall conform to ANSI B1.20.1.
Swage Nipples	1-1/2" and smaller	Seamless, extra strong 316 stainless steel, ASTM A403/A403M, Grade WP 316, concentric. Threaded ends, where applicable, shall conform to ANSI B1.20.1.

Instrument Material Class ZJ (Continued)

Items	Size	Description
Tube Fittings	1/2" and smaller	316 stainless steel, compression type with double ferrules, pipe threads conforming to ANSI B1.20.1 (SWAGELOK or equal).

VALVES

Items	Size	Description
Ball Valve	1/4"	Ball valve, 316 stainless steel body and stem, TFE packing, nylon handle with position stops, 1/4" compression type tube connections.
Ball Valve	1/2"	Ball valve, 316 stainless steel body and stem, TFE seat material, 1/2" female NPT connections.

CONSTRUCTION DETAILS

Pipe Bends:	None
Tubing Bends:	Use tubing bends in place of tubing fittings wherever possible. All tubing bends to be formed with tools designed for the tubing diameter. Minimum tubing bends shall be as follows: 1" radius bends for 1/4" tubing 1-1/2" radius bends for 1/2" tubing
Thread Compound:	Use an anaerobic pipe thread sealant on all pipe threads.

Note 1: Do not thread tubing. Use compression type fittings.

Note 2: Tubing sizes are average outside diameter, not nominal size.

9 2 1 2 4 1 3 0 5 8 5

Instrument Material Class ZZ

Material: Carbon Steel, Galvanized Steel and Stainless Steel

Items	Size	Description
Angle	1" thru 5"	Carbon steel, hot rolled structural quality to ASTM A36/A36M. 1/4" thick.
Flatbar	1" thru 6"	Carbon steel, hot rolled structural quality to ASTM A36/A36M, 1/4" thick.
Channel	4" only	Carbon steel, hot rolled structural quality to ASTM A36/A36M, C4 x 5.4.
Plates	1" thru 96"	Carbon steel, hot formed structural quality to ASTM A36/A36M, 1/4" thick.
	9" x 9" x 1/2"	Carbon steel, hot rolled structural quality to ASTM A36/A36M 1/2" thick, precut to 9" square, predrilled 4 holes, 9/16" diameter, one at each corner, with centers 1-1/2" from each adjacent edge.
Pipe for Supports	2"	Seamless black carbon steel, ASTM A53, Grade B, Schedule 40.
	3"	Seamless black carbon steel, ASTM A53, Grade B, Schedule 40.
U-Bolts	1/2" thru 12"	Carbon steel U-bolt with four carbon steel nuts.
Tubing Clamp	1/4" thru 1"	Stainless steel, Nuclear grade, 2 directional, 1/4" diameter anchor or weld down type. (Girard Development Inc. or equal)
Tubing Cushion	1" and smaller	Tubing cushion, flexible elastomer material.
Pipe Clamp	1/2" thru 2"	Galvanized steel pipe clamp with bolt and nut.

9 2 1 2 4 1 3 0 5 8 6

Instrument Material Class ZZ (Continued)

Items	Size	Description
Channel Single	-	Strut Channel ASTM A570/A570M Grade 33 hot-dipped galvanized steel 12 gauge. Coating conforming to ASTM A153.
Channel Multiple	-	Strut Channel ASTM A570/A570M Grade 33 hot-dipped galvanized steel 12 gauge. Coating conforming to ASTM A153.
Spring Nut	-	Galvanized steel spring nut.
Machine Screw	-	Galvanized steel round head machine screw.
Concrete Expansion Anchor	1/4", 1/2" and 5/8"	Carbon steel, standard materials, concrete construction. (KWIKBOLT II or equal)
Chain	3/16" dia.	High strength alloy steel chain (McMaster Carr #3587T13 or equal)
Eyebolt	5/16" dia.	Drop-forged eyebolt, blank, plain (McMaster Carr #3013T12 or equal)
Hook	--	Latching eye hook (McMaster Carr #3464T21 or equal)

9212413058 7

2.3 **LABELING**

2.3.1 All materials shall be marked and identified in accordance with the applicable specifications listed in the Material Sections of this specification.

2.4 **CLEANING**

2.4.1 All instrument material shall be shipped in a thoroughly clean condition. No sand, oil, grit, grease (except where required for lubrication), weld spatter, or other foreign material shall be present. All openings shall be capped or otherwise sealed with a dust-tight enclosure.

2.5 **PACKAGING**

2.5.1 Instrument material shall be packed and/or protected by the manufacturer's standard packing materials to ensure safe shipment and subsequent storage at the jobsite prior to actual installation. Packages shall be labeled sufficiently to prevent damage during shipping and storage. Each package shall be individually identified with the following information:

- Seller's Name
- Project Identification and Destination
- Purchase Order Number
- Specification Number
- Manufacturer's Name, Model, and Serial Number
- Description of Instrument Material
- Item Number

Other detached component(s) may be packed separately and shall be provided with manufacturer's standard identification tag, with the main instrument material item number securely attached to the component(s) using stainless steel wire.

2.6 **INSTRUMENT PIPING COMPONENTS**

2.6.1 Identification

2.6.1.1 Instrument piping valves shown on Contract Drawings shall be supplied with a metal tag bearing the applicable item number.

2.6.1.2 For valves, the following shall apply:

A. The tag shall be rust resistant metal, securely attached with no less than 6 twists of stainless steel wire.

B. The tags shall be attached to the valve bonnet.

C. Each tag shall be clearly stamped with the item number.

D. The minimum dimension for tags and wire shall be in accordance with the following:

Shape of Tag:	Round - 3" diameter Rectangular - 1/2" x 3"
Thickness of Tag:	18 gauge minimum
Lettering Height:	1/4" minimum
Wire Diameter:	18 gauge minimum

2.7 **DESIGN AND CONSTRUCTION**

2.7.1 General

2.7.1.1 The requirements contained in Paragraph 2.6 shall apply to all Material Classes included in this specification section.

2.7.2 Joining of Pipe or Tubing

2.7.2.1 Piping joints shall be in accordance with contract documents. The following are general methods of joining. In all cases, specific contract document requirements shall supersede this section.

A. Pipe and tubing shall be jointed by fittings and unions.

2.7.3 Pipe Fittings

A. Miters shall not be used.

B. Pipe bends shall not be used in place of fittings, except where so specified in the individual material sections of this specification, or on the Contract Drawings.

2.7.4 Line Reductions

2.7.4.1 When reducing within, to or from screwed or socketweld construction, use a swage nipple.

2.8 **PURCHASE REQUIREMENTS**

2.8.1 General

2.8.1.1 These material requirements are intended to supplement "Description" contained in Paragraph 2.2 (Instrument Material), of this specification. In the event of a conflict, the "Description" in the applicable paragraph shall govern.

2.8.2 Identification

2.8.2.1 Piping components shall be marked and identified by the manufacturer in accordance with applicable ASTM standards. Additional marking specified by MSS SP-25.

The following shall apply to carbon steel and stainless steel;

A. No indented marking shall be used.

B. The marking shall be done by using ink resistant to salt water atmosphere, freezing climates, or similar attack. It shall not in itself, cause corrosion of the material to which it is applied.

C. Identification characters shall be placed in a conspicuous location for ease of identification; however, the location must be such that the characters will not be obliterated during normal shipping and handling.

D. The minimum height of the characters shall be 1/8".

2.8.3 Valves

2.8.3.1 Lever operated valves shall be furnished with individual levers, wrenches, or handles.

2.8.3.2 Tapped holes in valve bodies, where required, shall be threaded in accordance with ANSI B1.1, Unified Inch Screw Threads. Threads shall be the Coarse Thread Series with Class 2B tolerances.

2.8.3.3 Valves shall have face-to-face (or end-to-end) dimensions in accordance with ANSI B16.10, where applicable.

2.8.3.4 Valves shall be pressure tested in accordance with the following:

A. All valves shall be inspected and tested in accordance with the standard to which they are manufactured.

B. Valves not covered by a standard shall be tested in accordance with the procedure of MSS SP-61, Pressure Testing of Steel Valves, or API 598, Valve Inspection and Testing, except that test pressures shall be as follows:

Shell	1.5 x P*
Seat	1.0 x P*

P* = The nonshock cold water, oil or gas (WOG) pressure rating specified by the manufacturer.

C. The valve stem packing used during the pressure testing shall be the same as that supplied with the valve.

2.8.4 Pipe and Tubing

2.8.4.1 Material

A. The steel for seamless, electric fusion welded, or electric resistance welded carbon steel pipe and tubing shall be made by the open hearth, basic-oxygen or electric furnace process.

B. Pipe and tubing furnished with circumferential buttwelds is not permitted.

C. Austenitic stainless steel pipe and tubing shall be furnished in the solution annealed condition.

2.8.5 Substitutions

A. Seamless carbon steel pipe in accordance with ASTM A106 (Grade B) is an acceptable substitute for ASTM A53 (Grade B) pipe.

B. Substitution of schedules, weight or thicknesses, other than those specified shall be submitted to the Buyer for approval prior to fabrication.

C. Grade A pipe shall not be substituted for pipe specified as Grade B.

D. Welded seam pipe shall not be substituted for pipe specified as seamless.

2.8.6 Lengths

A. Stainless steel tubing shall be supplied in nominal 20 foot straight lengths.

B. Square tubing shall be supplied in random mill lengths.

C. Metallic pipe shall be supplied in random lengths.

2.8.7 Dimensions and Weights

A. Nominal pipe sizes shall be in accordance with ANSI B36.10M.

B. Nominal wall thicknesses of steel pipe and fittings shall be in accordance with ANSI B36.10M.

C. Pipe specified as Schedule 40 and Schedule 80 shall be in accordance with ANSI B36.10M.

2.8.8 Finish

A. Unless otherwise specified, pipe and tube finish shall be as follows:

Metallic Pipe - The manufacturer's standard mill protective type coating, with no deposits in the interior.

Metallic Tubing - The manufacturer's standard mill finish.

2.8.9 Ends

A. Plain end pipe 1-1/2" and smaller shall be furnished with ends square cut, no bevel.

B. Threaded end pipe shall be taper pipe threads in accordance with ANSI B1.20.1.

C. The ends of square structural tubing shall have burrs removed.

2.8.10 Protection

A. Exposed threaded ends of pipe shall be fitted with thread protectors.

B. Round tubing shall be capped at both ends.

C. Precautions shall be taken to prevent scratching of exterior surfaces of round tubing.

2.8.11 Fittings

2.8.11.1 Materials

A. Austenitic stainless steel shall be furnished in the solution annealed condition.

B. Stainless steel compression fittings shall be produced from material in accordance with ASTM A182/A182M F316.

2.8.12 Substitutions

A. Substitution of schedules, weights or thicknesses, other than those specified, shall be submitted to the Buyer for approval prior to fabrication of affected piping.

B. Mitered type fittings (made by joining sections of pipe) are not permitted.

C. Fabricated type tees (made by joining sections of pipe) are not permitted.

D. Tapered reducers (reducers without knuckle radius offsets) are not permitted.

2.8.13 Connections

Threaded pipe fittings shall have taper pipe threads in accordance with ANSI B1.20.1.

PART 3 EXECUTION

3.1 INSTALLATION, APPLICATION AND ERECTION

3.1.1 Preparation and fabrication of components into assemblies or systems, as well as erection and installation, shall be in accordance with manufacturer's instructions, Specification Section 17704, General Instrumentation Installation and Testing and Contract Drawings.

3.1.2 The Seller shall install the instrument piping components in accordance with the manufacturer's instructions, Contract Drawings and the requirements detailed in Specification Section 17704, General Instrumentation Installation and Testing.

END OF SECTION

SECTION 17704
GENERAL INSTRUMENTATION
INSTALLATION AND TESTING
(SAFETY CLASS 3)

PART 1 GENERAL

1.1 SUMMARY

This section includes the technical requirements for the instrumentation installation and testing for the mechanical site utilities instrumentation.

1.2 REFERENCES

The publications listed below form a part of this specification to the extent referenced. The publications are referred to in the text by basic designation only.

AMERICAN NATIONAL STANDARDS INSTITUTE, INC. (ANSI)

ANSI B31.3	1990 Chemical Plant and Petroleum Refinery Piping

AMERICAN PETROLEUM INSTITUTE (API)

API RP 520 PT I	1990 Sizing, Selection, and Installation of Pressure-Relieving Devices in Refineries, Part I - Sizing and Selection, Fifth Edition
API RP 520 PT II	1988 Sizing, Selection. and Installation of Pressure-Relieving Devices in Refineries, Part II - Installation, Third Edition
API STD-527	1978 Commercial Seat Tightness of Safety Relief Valves with Metal-To-Metal Seats (R 1988)

AMERICAN SOCIETY OF MECHANICAL ENGINEERS (ASME)

ASME Boiler and Pressure Vessel Codes	1989 BPVC Section VIII Rules for Construction of Pressure Vessels Division 1; Addenda - 1989, Addenda - 1990 (Interfiled)

9 2 1 2 4 1 3 0 5 9 4

AMERICAN SOCIETY FOR TESTING AND MATERIALS (ASTM)

ASTM A269	1990 Standard Specification for Seamless and Welded Austenitic Stainless Steel Tubing for General Service
ASTM B75	1986 Standard Specification for Seamless Copper Tube

INSTRUMENT SOCIETY OF AMERICA (ISA)

ISA S5.4	1989 Standard Instrument Loop Diagrams

NATIONAL ELECTRICAL MANUFACTURERS ASSOCIATION (NEMA)

NEMA 250	1985 Enclosures for Electrical Equipment (1000 Volts Maximum), Revision 2 - May 1988

1.3 **RELATED REQUIREMENTS**

Specification Section 15061	Piping Material, Fabrication, Erection and Pressure Testing (Carbon Steel, Iron and Nonmetallic)
Specification Section 17703	Instrument Piping Materials
Specification Section 17708	Instrument Piping Pressure Testing
Specification Section 17801	Mechanical Site Utilities Instrumentation

1.4 **DEFINITIONS**

DBE - Design Basis Earthquake

TFE - Polytetrafluorethylene (Teflon or equal)

1.5 **SYSTEM DESCRIPTION**

1.5.1 This section establishes the requirements for the mounting of instruments, installation of instrument piping and testing of instrument piping. The installation, materials used and testing shall be in accordance with Specification Section 17703, Instrument Piping Materials and Specification Section 15061, Piping Material, Fabrication, Erection and Pressure Testing (Carbon Steel, Iron and Nonmetallic).

1.5.2 Items not covered by this specification are as follows:

A. Design, fabrication, factory calibration, and delivery of process instrumentation.

B. Installation of cable trays, raceways, conduit and electrical wiring, including grounding.

C. Testing of electrical control circuits which do not contain instrumentation devices.

1.6 **SUBMITTALS**

Submit the following in accordance with the Vendor Drawing and Data Requirements section of the Order/Subcontract.

1.6.1 Installation and test reports in accordance with Paragraph 3.2.1.

1.7 **PROJECT OR SITE ENVIRONMENTAL CONDITIONS**

1.7.1 Climatic and Geographic Site Conditions

A. Site Elevation 714 feet above sea level

B. Barometric Pressure 14.3 psia

C. Outside Design Temperature

1) Maximum Design Temperature 110°F

2) Minimum Design Temperature -20°F

3) Wet Bulb Design Temperature 68°F

1.7.2 Operating Environment

A. Normal Temperature -20°F to 110°F

B. Relative Humidity Not controlled

PART 2 PRODUCTS

2.1 **MATERIALS AND EQUIPMENT**

2.1.1 General Requirements

2.1.1.1 Furnish all instruments, equipment, piping and support materials except as noted on the Contract Drawings.

2.1.1.2 All instruments, equipment, piping and support materials shall be new and unused.

2.2 **INSTRUMENT PIPING MATERIALS**

2.2.1 Instrument piping material shall be in accordance with ANSI B31.3.

2.2.2 Instrument piping material shall conform to the applicable requirements of Specification Section 17703, Instrument Piping Materials, for the various types and classes shown on the Contract Drawings. Piping which is supplied as a part of packaged equipment may conform to the manufacturer's standard, providing it meets the specified design and applicable code requirements.

2.2.3 Minimum pipe or tubing size shall be 1/4 inch, except for connections at instruments, which shall be the manufacturer's standard.

2.2.4 Sensing line tubing for connection to the process piping shall be 1/2 inch O.D. minimum.

2.2.5 Seals or purges will be provided as specified on Contract Drawings when necessary to prevent potential contamination, corrosive or solids bearing fluids from entering instruments or instrument lines.

2.2.6 Continuous, seamless tubing shall be used throughout. Midline splicing of short length tubing is not allowed.

2.3 **INSTRUMENT SUPPORT MATERIAL**

Support material to be furnished by the Seller is indicated on the Contract Drawings. All support material shall conform to Specification Section 17703, Instrument Piping Materials.

PART 3 EXECUTION

3.1 **INSTALLATION, APPLICATION AND ERECTION**

3.1.1 General Installation Requirements

3.1.1.1 Horizontal runs of instrument impulse tubing shall be sloped in accordance with the Contract Drawings.

3.1.1.2 Panel boards, racks, pipe stands, or other mounting structures shall be leveled, aligned, and the anchor bolt nuts tightened to a snug tight condition to ensure that the nut and mounting base that are being anchored are brought into good contact with each other. Snug tight is defined as the tightness attained at the full effort of a man using an ordinary spud wrench.

9212413059 7

3.1.1.3 A minimum seven foot head room clearance shall be provided for all horizontal runs of instrument sensing lines in areas where head room is required for maintenance tasks on equipment, panels, and vessels and also in the building's aisle and door areas.

3.1.1.4 All DBE (see Attachment B) rated instrument sensing, signal, and supply tubing lines shall be installed and supported as indicated on the Contract Drawings. The use of dissimilar metals in direct contact shall not be allowed, to avoid galvanic corrosion.

3.1.1.5 Pneumatic instruments and combination pneumatic/electrical instruments shall be installed in accordance with the Contract Drawings, the manufacturer's installation instructions and Attachment A, Installation Index.

3.1.1.6 All locally mounted indicating instruments shall be faced toward the normal operating area and shall be within reading distance and in line of sight. Mounting and orientation shall be done to ensure ease of maintenance without the use of ladders by the maintenance personnel.

3.1.1.7 Applications requiring flexible hoses shall use braided stainless steel TFE lined braided hose.

3.1.1.8 All instruments shall be provided with an 18 gauge (minimum) stainless steel tag bearing the instrument tag number and service description stamped or engraved, as shown on Attachment B, Engineering Instrument Index and Specification Section 17801, Mechanical Site Utilities Instrumentation.

3.1.1.9 The instrument tag shall be permanently affixed to the instrument using stainless steel wire where possible, otherwise the use of stainless steel screws or rivets is acceptable. This tag is in addition to any standard nameplate showing manufacturer, model number, range, etc.

3.1.2 Tubing and Piping Installation

3.1.2.1 Metallic Tubing

3.1.2.2 Tubing runs shall not be collapsed or kinked at bends or other points. The runs between bends shall be straight with adjacent lines parallel. The maximum use of tubing bends in place of fittings shall be employed. These bends must be fabricated by the use of tube bending fixtures or tools.

3.1.2.3 Tubing bend deformation must be at least three times the outside diameter away from tube ends but in no case closer than one inch. A uniform cross section area shall be maintained.

9 2 1 2 4 1 0 5 9 8

3.1.2.4 All bending should be performed before fittings are installed. In the event that minor adjustment bending is required after fittings are installed, precautions shall be taken to avoid stresses at the fitting.

3.1.2.5 The manufacturer's recommendations shall be followed for the tube bender and tubing (but shall not be less than shown in Specification Section 17703, Instrument Piping Materials) when attempting to obtain minimum radius bends.

3.1.2.6 Tubing shall be handled in such a manner as to meet acceptable tolerances for the exterior surface. Stainless steel tubing tolerances are covered in ASTM A269.

3.1.2.7 Tubing displacement due to thermal cycling, vibration, seismic (DBE) displacements, or other forces must be considered. The Seller shall provide a minimum diameter loop as shown on the Contract Drawings. In addition, tubing attached to DBE rated instruments (refer to Attachment B) and piping shall be provided with a loop between the instrument and the first anchor point and a loop between the root valve and the first anchor point.

3.1.2.8 All tubing shall be run in horizontal and vertical planes. All horizontal lines shall be parallel to the building floors unless the Contract Drawings require sloping. All vertical runs shall be perpendicular to the building floor. Tube routing shall not impede access for operation, maintenance or removal of equipment and instruments. Tube routing shall not present a personnel hazard. Consideration shall be given to avoid the potential use of tubing as a foot rail, step ladder, or hand rail. Valves and instruments shall not be supported by tubing.

3.1.2.9 Tubing cleanliness controls shall be as follows:

A. Tubing must be properly sized and rounded with rounding and sizing tools. Fabrication technique must be carefully controlled in order to avoid plugging of lines.

B. All tubing shall be cut with standard cutting tools, reamed to full bore and all burrs removed. No saw cuts will be allowed.

C. All tubing shall be blown out using clean dry air to ensure removal of all chips that may have entered.

D. All tubing shall be capped after cutting to maintain cleanliness. Caps shall not be removed except at tubing installation.

3.1.3 Tube Fittings

3.1.3.1 Tube fitting installation shall be in accordance with the manufacturer's installation instructions. Mating fittings shall be of the same manufacturer and shall be of the flareless, compression type. Flared fittings are not acceptable.

3.1.3.2 Sealants used for connections shall be as specified in Specification Section 17703, Instrument Piping Materials. The use of TFE tape is prohibited.

3.1.4 Primary Impulse Piping

The Seller shall provide and install all piping and tubing between process shutoff valve (root valve) and instruments, including test, purge, vent, and drain connections as required by the Contract Drawings.

3.1.5 Instrument Air Piping

The Seller shall provide and install all instrument air piping and tubing and miscellaneous hardware required to connect and support pneumatic transmitting and receiving instruments. This work shall include air supply piping from the header, filter, regulators, and interconnecting tubing between instruments and users as specified on Contract Drawings.

3.1.6 Instrument Installation and Layout

3.1.6.1 Location Drawings

3.1.6.1.1 Instruments requiring piping connection to the service piping or equipment and/or instrument air piping are shown on the Contract Drawings. The Contract Drawings indicate the placement of the instruments above or below the instrument connection of the service piping or equipment as well as the location in the building.

3.1.6.1.2 All instruments are shown on the Contract Drawings in a position as close to the exact position as the scale drawing will permit. The Seller may make minor adjustments in the instrument location to avoid interference with other equipment.

3.1.6.2 Instrument Accessibility

3.1.6.2.1 Transmitters which connect to equipment or service piping shall be as indicated on the Contract Drawings.

3.1.6.2.2 Local instruments that need to be adjusted or read during operation, such as recorders, indicators (except devices close coupled or line mounted) and controllers shall be mounted so that they are accessible

9 2 1 2 4 1 3 0 6 0 0

from the floor, grade or platforms. The instruments shall be mounted approximately 4 feet 6 inches (4'-6") above the floor, grade or platform.

3.1.6.3 Instrument Clearances

Instruments shall be located as shown on the Contract Drawings so as to maintain clearances required for corridors, access ways and operation and maintenance of valves and equipment.

3.1.6.4 Instrument Mounting and Supports

3.1.6.4.1 The Contract Drawings, Attachment A - Installation Index, and Attachment B - Engineering Instrument Index identifies the Safety Class and mounting detail the Seller shall use.

3.1.6.4.2 Instrument piping or tubing shall be supported from the permanent structure, except:

A. Instrument piping shall not be supported from piping unless indicated on Contract Drawings.

3.1.6.4.3 Instrument signal and supply tubing of 1/2 inch or less outer diameter shall have a maximum distance between supports of 3 feet.

3.1.7 Instrument Panels - General

3.1.7.1 The Seller shall install instrument local panels in their permanent location on the site. The panels shall be mounted level and plumb. Anchorage and mounting shall be as shown on the instrument manufacturers certified drawings. The Seller shall provide protection for the front of panels to prevent damage during construction.

3.1.7.2 Any damage to panel finish or to any panel components that occurs during construction shall be reworked by the Seller prior to acceptance.

3.1.7.3 The Seller shall make piping and tubing connections to the panel as required by Contract Documents.

3.1.7.4 All electrical cable, conduit, and other connections to floor mounted local panels shall have sufficient slack and/or flexibility to allow 2 inches of horizontal movement in any direction between the panel and the building structure or other independently mounted equipment or panels. This flexibility is not required when the connection is less than 3 feet above the floor or when the panel is structurally connected to the building or other panel, preventing differential movement.

3.1.7.5 Horizontal clearance between the rear of the panel structure and any permanent part of the room shall be as noted on the Contract

9212413061

Drawings. Instruments, instrument piping, electrical wiring and structural members which comprise the panel shall be considered as part of the panel structure.

3.1.7.6 Penetration into NEMA rated enclosures (refer to NEMA 250) and instrument local panels shall comply with the NEMA rating.

3.1.8 Control Valves - General

3.1.8.1 All electrical cable, conduit, and other connections to control valves shall have sufficient slack and/or flexibility to allow 2 inches of horizontal movement in any direction between the control valve and the building structure or other independently mounted equipment.

3.1.9 Seals and purges shall be used as shown on the Contract Drawings.

3.2 **FIELD QUALITY CONTROL**

3.2.1 Installation and Test Reports

3.2.1.1 The Seller shall prepare final installation reports to document that the installation is in accordance with Contract Documents.

3.2.1.2 The Seller shall provide formal individual test reports for each instrument, loop or system requiring testing as provided hereinafter. The Seller shall provide instrument loop diagrams in accordance with ISA S5.4, Standard Instrument Loop Diagrams.

3.2.1.3 Separate test procedures for post-installation checkout shall be submitted to the Buyer for review 30 days before testing is to be performed.

3.2.2 Pressure Tests

3.2.2.1 Tubing and Connections

A. All instrument tubing lines and connections shall be tested for leaks and for clarity (free of obstructions), in accordance with Specification Section 17708, Instrument Piping Pressure Testing.

3.2.2.2 Hydrostatic Pressure Testing

A. Pressure testing of instrument process piping after the first block valve and control pneumatic piping shall be in accordance with Specification Section 17708, Instrument Piping Pressure Testing.

3.2.2.3 Installation and Protection of In-Line Instruments

The following gives methods of installation and protection to be given to instruments and components during flushing, purging and hydrostatic pressure testing procedures. Attachment A of Specification Section 15061, Piping Material, Fabrication, Erection and Pressure Testing (Carbon Steel, Iron and Nonmetallic), provides the recommended status of instruments during hydrostatic pressure testing.

A. Orifice plates, annubars, flow paddles, steam trap discs, etc., shall not be in line during flushing or hydrostatic pressure testing operations. When in line devices are removed, flange protectors shall be installed on the device to prevent dirt, water and other foreign particles from entering the body of the instrument and damage to the flange.

B. Orifice tap shutoff valves shall be closed off and instrument drain valves shall be opened during these operations.

C. Spacer sections, if required, for orifice meter runs shall be put in place during hydrostatic pressure testing and flushing. Line specification gaskets, studs, and nuts shall be installed.

D. Orifice plates shall be installed by the Seller just prior to acceptance testing.

3.2.2.4 Level Instruments

A. Float type level instruments shall be blocked and drained during hydrostatic pressure testing.

B. Capacitance type instruments shall be installed as received. Caution should be exercised during hydrostatic pressure testing. Some capacitance probes may not stand the full pressure. The probe pressure rating should be verified before test.

3.2.2.5 Pressure Instruments

A. During hydrostatic pressure testing close the block valves and disconnect the process piping to the instrument.

B. Bourdon tube type pressure gauges and switches shall not be installed prior to hydrostatic pressure testing.

C. Differential pressure transmitters, switches and I/P converters shall not be installed prior to hydrostatic pressure testing.

9 2 1 2 4 1 3 0 6 0 3

3.2.2.6 Control Valves and Regulators

A. Control valves (except butterfly valves) and self contained pressure regulators shall not be subjected to hydrostatic pressure testing or flushing. They shall either be removed or isolated from the test by blinds.

B. Butterfly valves may be left in place during hydrostatic pressure testing and flushing. They shall be in the open position during the operation.

C. Before checkout, all valve stems shall be cleaned of all foreign matter such as paint and tape.

3.2.2.7 Relief Valves

In general, all safety relief valves shall be removed during hydrostatic pressure testing. However, if the Buyer allows specific valves to remain installed during hydrostatic pressure testing, these valves shall be protected from possible damage by installation of temporary test blinds on the process side of relief valve. All temporary blinds shall be easily identified and removed after hydrostatic pressure testing and flushing is completed. Test gags shall not be used. All safety relief valves and their installation shall be in accordance with API RP520 (Part I and Part II), API STD 527, and ASME Boiler and Pressure Vessel Codes, Section VIII, Division 1.

3.2.3 Acceptance

3.2.3.1 Acceptance of all instrument equipment covered by the test procedures in Part 3 shall be contingent upon proper execution of the required tests and acceptable test results.

3.2.3.2 Acceptance of all instruments not covered in the test procedures in Part 3 and not requiring formal tests shall be dependent upon each instrument satisfactorily performing its intended function.

END OF SECTION

THIS PAGE INTENTIONALLY
LEFT BLANK

U.S. DEPARTMENT OF ENERGY
HANFORD WASTE VITRIFICATION PLANT
RICHLAND, WASHINGTON
DOE CONTRACT DE-AC06-86RL10838

INSTALLATION INDEX
SPECIFICATION SECTION 17704, ATTACHMENT A
12/16/91

GENERAL NOTES:

A. FOR INSTRUMENTS NOT LISTED IN THIS INSTALLATION INDEX, REFERENCE ENGINEERING INDEX (ATTACHMENT B).

B. INSTRUMENT PIPING SHALL CONFORM TO THE INDIVIDUAL INSTRUMENT INSTALLATION DETAILS REFERENCED IN THIS INDEX. THE DISTRIBUTED CONTROL SYSTEM IS BY BUYER.

C. ALL DRAWING NUMBERS REFERENCED IN THIS INDEX ARE PRECEDED BY H-2.

D. INSTRUMENT AIR HEADER PIPING SHALL BE INSTALLED AND SUPPORTED AS SHOWN ON PIPING DRAWINGS.

E. FOR IMPULSE AND PNEUMATIC TUBING SUPPORT REFER TO SPECIFICATION SECTION B-595-C-A160-17704.

F. INSTRUMENT PIPING SHALL BE PRESSURE TESTED IN ACCORDANCE WITH SPECIFICATION SECTION B595-C-A160-17708.

G. INSTRUMENTS MOUNTED AND PIPED WITH ANOTHER INSTRUMENT OR COMPONENT ARE IDENTIFIED BY LISTING W/*** IN THE APPROPRIATE ASSEMBLY COLUMN. IF THERE IS NO TAG NUMBER, THE INSTRUMENT OR COMPONENT IS IN THE SAME LOOP.

EXAMPLE: W/FT-204

H. ELECTRICAL ASSEMBLY NUMBERS REFERENCED IN THIS INDEX ARE PRECEDED BY H-2-122082-3.

I. BDG NO: HWVP BUILDING NUMBER. FOR THIS CONSTRUCTION PACKAGE THE APPLICABLE NUMBERS ARE:

BLDG NO	BLDG NAME
20	FIRE WATER TANK AND PUMP HOUSE
21	RAW WATER PUMP HOUSE
23	SANITARY WATER / RAW WATER MANIFOLD SHELTER

J. TEST PRESSURES ARE IN POUNDS PER SQUARE INCH GAUGE.

K. ABBREVIATIONS

BDG	BUILDING
DCS	DISTRIBUTED CONTROL SYSTEM
I/O	INPUT/OUTPUT
IAS	INSTRUMENT AIR SUPPLY
INSTL	INSTALLATION
SHT	SHEET
RM	ROOM

L. FOR SUPPORT OF LP-500-007 SEE STRUCTURAL DRAWING H-2-118007.

SPECIFIC NOTES:

1. DRAWINGS H-2-124026, 030, 033, & 034 ARE PIPING PLAN DRAWINGS.

2. DEVICE IS FURNISHED AND INSTALLED WITH SELLER PANEL.

3. DEVICE TERMINATES IN A SELLER FURNISHED PANEL.

4. DEVICE IS FURNISHED W/ COMPRESSED AIR BOTTLE BY BUYER. FOR LOCATION SEE PIPING DRAWING H-2-124030.

5. DEVICE IS FURNISHED W/ WET PIPE SPRINKLER SYSTEM REFERENCE SPECIFICATION SECTION B595-C-A160-15501.

ATTACHMENT A

THIS PAGE INTENTIONALLY
LEFT BLANK

9 2 1 2 4 1 3 0 6 0 6

U.S. DEPARTMENT OF ENERGY
HANFORD WASTE VITRIFICATION PLANT
RICHLAND, WASHINGTON
DOE CONTRACT DE-AC06-86RL10838

D=DIRECT
E=ELECTRICAL
P=PROCESS PIPING
C=COMBINATION

CONSTRUCTION PKG A160
INSTALLATION INDEX
12/16/91

		P&ID							INSTALLATION DETAIL DRAWINGS				ELECTRICAL		
BDG	RM	NUMBER	SHT	INSTRUMENT TAG NUMBER	DCS I\O	PNL \ RACK	INSTL TYPE	LOCATION PLAN DWG	PROCESS	PNEUMATIC	IAS	SUPPORT	INSTL ASSY	TEST PRESS	NOTES
20	0	123351	01	XCV-420-113	N	NA	D	124026	---	---	---	---	---	---	1
20	0	123351	01	XCV-420-114	N	NA	D	124026	---	---	---	---	---	---	1
20	0	123351	01	XCV-420-115	N	NA	D	124026	---	---	---	---	---	---	1
20	0	123351	01	XCV-420-116	N	NA	D	124026	---	---	---	---	---	---	1
21	0	123358	01	HS-500-101	N	LP-500-001A	E	---	---	---	---	---	---	---	2
21	0	123358	01	KS-500-101	N	LP-500-001A	E	---	---	---	---	---	---	---	2
21	0	123358	01	YC-500-101	Y	LP-500-001A	E	---	---	---	---	---	---	---	---
21	0	123358	01	HS-500-102	N	LP-500-001B	E	---	---	---	---	---	---	---	2
21	0	123358	01	KS-500-102	N	LP-500-001B	E	---	---	---	---	---	---	---	2
21	0	123358	01	YC-500-102	N	LP-500-001B	E	---	---	---	---	---	---	---	---
21	0	123358	01	IT-500-103	Y	LP-500-001A	E	---	---	---	---	---	---	---	2
21	0	123358	01	II-500-103A	N	LP-500-001A	E	---	---	---	---	---	---	---	2
21	0	123358	01	IT-500-104	Y	LP-500-001B	E	---	---	---	---	---	---	---	2
21	0	123358	01	II-500-104A	N	LP-500-001B	E	---	---	---	---	---	---	---	2
21	0	123358	01	PI-500-106	N	NA	P	124030	121422/3	---	---	---	---	165	1
21	0	123358	01	PI-500-107	N	NA	P	124030	121422/3	---	---	---	---	165	1
21	0	123358	01	YC-500-109	Y	LP-500-001B	E	---	---	---	---	---	---	---	---
21	0	123358	01	YV-500-109	N	NA	P	121201	---	---	---	---	---	---	---
21	0	123358	01	YY-500-109	Y	NA	C	121201	---	---	121423/4	---	X01	---	---
21	0	123358	01	ZSH-500-109	Y	NA	E	121201	---	---	---	---	X13	---	---
21	0	123358	01	ZSL-500-109	Y	NA	E	121201	---	---	---	---	W/ZSH-109	---	---
21	0	123358	01	PSL-500-111	Y	NA	C	121201	121422/2	---	---	12830/3	X02	165	3
23	0	123358	01	PSL-500-112	Y	NA	C	121201	W/PI-114	---	---	W/PI-114	X02	165	---
23	0	123358	01	PV-500-112	N	NA	P	121201	---	---	---	---	---	---	---
23	0	123358	01	PY-500-112	Y	NA	C	121201	---	---	121423/6	---	X01	---	---

ATTACHMENT A

THIS PAGE INTENTIONALLY
LEFT BLANK

U.S. DEPARTMENT OF ENERGY
HANFORD WASTE VITRIFICATION PLANT
RICHLAND, WASHINGTON
DOE CONTRACT DE-AC06-86RL10838

D=DIRECT
E=ELECTRICAL
P=PROCESS PIPING
C=COMBINATION

CONSTRUCTION PKG A160
INSTALLATION INDEX
12/16/91

		P&ID		INSTRUMENT	DCS	PNL \ RACK	INSTL	LOCATION	INSTALLATION DETAIL DRAWINGS				ELECTRICAL	TEST	NOTES
BDG	RM	NUMBER	SHT	TAG NUMBER	I\O		TYPE	PLAN DWG	PROCESS	PNEUMATIC	IAS	SUPPORT	INSTL ASSY	PRESS	
23	0	123358	01	ZSH-500-112	Y	NA	E	121201	---	---	---	---	W/ZSL-112	---	---
23	0	123358	01	ZSL-500-112	Y	NA	E	121201	---	---	---	---	X13	---	---
23	0	123358	01	PI-500-113	N	NA	P	---	---	---	W/PY-112	---	---	---	4
23	0	123358	01	PI-500-114	N	NA	P	124030	121422/4	---	---	121380/4	---	165	---
23	0	123358	01	PCV-500-115	N	NA	P	---	---	---	W/PY-112	---	---	---	4
21	0	123358	01	PI-500-117	N	NA	P	124030	121422/3	---	---	---	---	165	1
23	0	123358	01	PI-500-118	N	NA	P	---	---	---	---	---	---	---	4
20	0	123358	01	PI-500-191	N	NA	P	---	---	---	---	---	---	---	5
20	0	123358	01	PI-500-192	N	NA	P	---	---	---	---	---	---	---	5
20	0	123358	01	PSH-500-193	N	NA	C	---	---	---	---	---	---	---	5
21	0	123358	01	PI-500-194	N	NA	P	---	---	---	---	---	---	---	5
21	0	123358	01	PI-500-195	N	NA	P	---	---	---	---	---	---	---	5
21	0	123358	01	PSH-500-196	N	NA	C	---	---	---	---	---	---	---	5
20	0	123358	02	LIT-500-201	Y	NA	C	121200	121423/5	---	---	---	X03	---	---
20	0	123358	02	LI-500-202	N	NA	P	124033	121422/5	---	---	---	---	---	1
20	0	123358	02	TSHL-500-203	N	NA	C	121200	---	---	---	---	X02	---	---
20	0	123358	02	TW-500-203	N	NA	P	W/TSHL	---	---	---	---	---	---	---
20	0	123358	02	FAH-500-204	N	LP-500-007	E	---	---	---	---	---	---	---	---
20	0	123358	02	FE-500-204	N	NA	P	124033	W/FIT	---	---	---	---	---	1
20	0	123358	02	FIC-500-204	N	LP-500-007	E	---	---	---	---	---	---	---	---
20	0	123358	02	FIT-500-204	N	NA	C	121200	121423/1	---	---	121380/1	X03	165	---
20	0	123358	02	FSH-500-204	N	LP-500-007	E	---	---	---	---	---	---	---	---
20	0	123358	02	FV-500-204	N	NA	P	121200	---	---	121423/3	---	---	---	---
20	0	123358	02	FY-500-204	N	NA	C	121200	---	---	W/FV-204	---	X07	---	---
20	0	123358	02	HS-500-205	N	LP-500-004	E	---	---	---	---	---	---	---	3
20	0	123358	02	HS-500-206	N	LP-500-006	E	---	---	---	---	---	---	---	3

ATTACHMENT A

THIS PAGE INTENTIONALLY
LEFT BLANK

U.S. DEPARTMENT OF ENERGY
HANFORD WASTE VITRIFICATION PLANT
RICHLAND, WASHINGTON
DOE CONTRACT DE-AC06-86RL10838

D=DIRECT
E=ELECTRICAL
P=PROCESS PIPING
C=COMBINATION

CONSTRUCTION PKG A160
INSTALLATION INDEX
12/16/91

		P&ID		INSTRUMENT	DCS	PNL \ RACK	INSTL	LOCATION	INSTALLATION DETAIL DRAWINGS				ELECTRICAL	TEST	NOTES
BDG	RM	NUMBER	SHT	TAG NUMBER	I\O		TYPE	PLAN DWG	PROCESS	PNEUMATIC	IAS	SUPPORT	INSTL ASSY	PRESS	
20	0	123358	02	YC-500-206	N	LP-500-006	E	---	---	---	---	---	---	---	---
20	0	123358	02	HS-500-207	N	LP-500-007	E	---	---	---	---	---	---	---	---
20	0	123358	02	YC-500-207	N	LP-500-007	E	---	---	---	---	---	---	---	---
20	0	123358	02	TAH-500-208	N	LP-500-007	E	---	---	---	---	---	---	---	---
20	0	123358	02	TSH-500-208	N	NA	C	121200	---	---	---	---	X02	---	---
20	0	123358	02	TW-500-208	N	NA	P	W/TSH	---	---	---	---	---	---	---
20	0	123358	02	LE-500-209	N	NA	E	121200	---	---	---	---	X14	---	---
20	0	123358	02	LSH-500-209	N	NA	C	121200	---	---	---	121380/3	W/LE	---	---
20	0	123358	02	LSL-500-209A	N	NA	C	121200	---	---	---	W/LSH	W/LE	---	---
20	0	123358	02	LSL-500-209B	N	NA	C	121200	---	---	---	W/LSH	W/LE	---	---
20	0	123358	02	HS-500-210	N	LP-500-007	E	---	---	---	---	---	---	---	---
20	0	123358	02	YC-500-210	N	LP-500-007	E	---	---	---	---	---	---	---	---
20	0	123358	02	YV-500-210	N	NA	P	121200	---	---	---	---	---	---	---
20	0	123358	02	YY-500-210	N	NA	C	121200	---	---	121423/4	---	X01	---	---
20	0	123358	02	HS-500-211	N	LP-500-005A	E	---	---	---	---	---	---	---	2
20	0	123358	02	KS-500-211	N	LP-500-005A	E	---	---	---	---	---	---	---	2
20	0	123358	02	YC-500-211	Y	LP-500-005A	E	---	---	---	---	---	---	---	---
20	0	123358	02	HS-500-212	N	LP-500-005B	E	---	---	---	---	---	---	---	2
20	0	123358	02	KS-500-212	N	LP-500-005B	E	---	---	---	---	---	---	---	2
20	0	123358	02	YC-500-212	Y	LP-500-005B	E	---	---	---	---	---	---	---	---
20	0	123358	02	PSV-500-213	N	NA	P	124034	---	---	---	---	---	---	1
20	0	123358	02	TI-500-214	N	NA	P	124034	---	---	---	---	---	---	1
20	0	123358	02	TW-500-214	N	NA	P	W/TI	---	---	---	---	---	---	---
21	0	123358	02	HS-500-215	N	LP-500-002A	E	---	---	---	---	---	---	---	2
20	0	123358	02	KS-500-215	N	LP-500-002A	E	---	---	---	---	---	---	---	2
20	0	123358	02	YC-500-215	Y	LP-500-002A	E	---	---	---	---	---	---	---	---

ATTACHMENT A

THIS PAGE INTENTIONALLY
LEFT BLANK

U.S. DEPARTMENT OF ENERGY
HANFORD WASTE VITRIFICATION PLANT
RICHLAND, WASHINGTON
DOE CONTRACT DE-AC06-86RL10838

D=DIRECT
E=ELECTRICAL
P=PROCESS PIPING
C=COMBINATION

CONSTRUCTION PKG A160
INSTALLATION INDEX
12/16/91

		P&ID		INSTRUMENT	DCS	PNL \ RACK	INSTL	LOCATION	INSTALLATION DETAIL DRAWINGS				ELECTRICAL	TEST	NOTES
BDG	RM	NUMBER	SHT	TAG NUMBER	I\O		TYPE	PLAN DWG	PROCESS	PNEUMATIC	IAS	SUPPORT	INSTL ASSY	PRESS	
20	0	123358	02	ZAL-500-216	N	LP-500-002B	E	---	---	---	---	---	---	---	3
20	0	123358	02	ZSL-500-216	N	NA	C	121200	---	---	---	---	X13	---	3
20	0	123358	02	FE-500-217	N	NA	P	124033	W/FIT	---	---	---	---	---	1
20	0	123358	02	FIT-500-217	Y	NA	C	121200	121423/1	---	---	121380/1	X03	165	---
20	0	123358	02	FI-500-217A	N	LP-500-007	E	---	---	---	---	---	---	---	---
20	0	123358	02	JIC-500-218	N	LP-500-006	E	---	---	---	---	---	---	---	2
20	0	123358	02	TE-500-218	N	NA	C	121200	---	---	---	---	X11	---	---
20	0	123358	02	TIC-500-218	N	LP-500-006	E	---	---	---	---	---	---	---	2
20	0	123358	02	TALL-500-227	N	LP-500-007	E	---	---	---	---	---	---	---	---
20	0	123358	02	TSLL-500-227	N	NA	C	121200	---	---	---	---	X02	---	---
20	0	123358	02	TW-500-227	N	NA	P	W/TSLL	---	---	---	---	---	---	---
20	0	123358	02	HS-500-229	N	LP-500-002B	E	---	---	---	---	---	---	---	2
20	0	123358	02	KS-500-229	N	LP-500-002B	E	---	---	---	---	---	---	---	2
20	0	123358	02	YC-500-229	Y	LP-500-002B	E	---	---	---	---	---	---	---	---
20	0	123358	02	PSL-500-230	Y	NA	C	121200	121422/2	---	---	121380/3	X02	165	2
20	0	123358	02	PAL-500-230B	N	LP-500-004	E	---	---	---	---	---	---	---	2
20	0	123358	02	PSL-500-231	N	NA	C	121200	121422/2	---	---	121380/3	X02	165	3
20	0	123358	02	PSL-500-232	N	NA	C	121200	121422/2	---	---	121380/2	X02	165	3
20	0	123358	02	ZAL-500-233	N	LP-500-002B	E	---	---	---	---	---	---	---	3
20	0	123358	02	ZSL-500-233	N	NA	C	121200	---	---	---	---	X13	---	3
20	0	123358	02	ZAL-500-234	N	LP-500-002A	E	---	---	---	---	---	---	---	3
20	0	123358	02	ZSL-500-234	N	NA	C	121200	---	---	---	---	X13	---	3
20	0	123358	02	ZAL-500-235	N	LP-500-002A	E	---	---	---	---	---	---	---	3
20	0	123358	02	ZSL-500-235	N	NA	C	121200	---	---	---	---	X13	---	3
20	0	123358	02	FSL-500-236	N	NA	C	121200	---	---	---	---	X02	---	3
20	0	123358	02	PSV-500-238	N	NA	P	124033	---	---	---	---	---	---	1

ATTACHMENT A

THIS PAGE INTENTIONALLY
LEFT BLANK

U.S. DEPARTMENT OF ENERGY
HANFORD WASTE VITRIFICATION PLANT
RICHLAND, WASHINGTON
DOE CONTRACT DE-AC06-86RL10838

D=DIRECT
E=ELECTRICAL
P=PROCESS PIPING
C=COMBINATION

CONSTRUCTION PKG A160
INSTALLATION INDEX
12/16/91

		P&ID							INSTALLATION DETAIL DRAWINGS				ELECTRICAL		
BDG	RM	NUMBER	SHT	INSTRUMENT TAG NUMBER	DCS I\O	PNL \ RACK	INSTL TYPE	LOCATION PLAN DWG	PROCESS	PNEUMATIC	IAS	SUPPORT	INSTL ASSY	TEST PRESS	NOTES
20	0	123358	02	PSV-500-239	N	NA	P	124033	---	---	---	---	---	---	1
20	0	123358	02	PI-500-241	N	NA	P	124034	121422/3	---	---	---	---	165	1
20	0	123358	02	PI-500-242	N	NA	P	124034	121422/3	---	---	---	---	165	1
20	0	123358	02	PI-500-243	N	NA	P	124034	121422/3	---	---	---	---	165	1
20	0	123358	02	TI-500-244	N	NA	P	124033	---	---	---	---	---	---	1
20	0	123358	02	TW-500-244	N	NA	P	W/TI	---	---	---	---	---	---	---
20	0	123358	02	FO-500-245	N	NA	D	124034	---	---	---	---	---	---	1
20	0	123358	02	PI-500-246	N	NA	P	124034	121422/3	---	---	---	---	138	1
20	0	123358	02	PI-500-247	N	NA	P	124033	121422/3	---	---	---	---	165	1
20	0	123358	02	PI-500-248	N	NA	P	124034	121422/3	---	---	---	---	165	1
20	0	123358	02	PI-500-250	N	NA	P	124034	121422/3	---	---	---	---	138	1
20	0	123358	02	FE-500-251	N	NA	P	124033	---	---	---	---	---	---	1
20	0	123358	02	FI-500-251	N	NA	P	124033	121423/2	---	---	W/PSL-232	---	165	1
20	0	123358	02	IT-500-252	Y	LP-500-002A	E	---	---	---	---	---	---	---	---
20	0	123358	02	II-500-252B	N	LP-500-002A	E	---	---	---	---	---	---	---	2
20	0	123358	02	IT-500-253	Y	LP-500-002B	E	---	---	---	---	---	---	---	---
20	0	123358	02	II-500-253B	N	LP-500-002B	E	---	---	---	---	---	---	---	2
21	0	123359	01	PI-490-110	N	NA	P	124030	121422/3	---	---	---	---	138	1
23	0	123359	01	PI-490-311	N	NA	P	124030	121422/3	---	---	---	---	138	1
21	0	123361	07	LE-530-806	N	NA	E	121201	---	---	---	---	X14	---	---
21	0	123361	07	LSH-530-806	Y	NA	E	121201	---	---	---	W/LSL-806	W/LE	---	---
21	0	123361	07	LSL-530-806	Y	NA	E	121201	---	---	---	121380/3	W/LE	---	---
21	0	123361	07	PI-530-810	N	NA	P	124030	121422/3	---	---	---	---	110	1
21	0	123361	07	PI-530-811	N	NA	P	124030	121422/3	---	---	---	---	110	1

THIS PAGE INTENTIONALLY BLANK

ATTACHMENT A

THIS PAGE INTENTIONALLY
LEFT BLANK

GENERAL NOTES:

A. FOR ADDITIONAL INFORMATION ON INSTRUMENTS LISTED IN THIS INDEX, REFERENCE INSTRUMENT INSTALLATION INDEX, ATTACHMENT A TO SPECIFICATION SECTION B-595-C-A160-17704.

B. ALL DRAWING NUMBERS REFERENCED IN THIS INDEX ARE PRECEDED BY H-2-.

C. EXPLANATION OF ENGINEERING INSTRUMENT INDEX FIELDS:

1. P&ID NUMBER AND SHEET: INDICATES REFERENCE PIPING AND INSTRUMENTATION DIAGRAM WHERE INSTRUMENT IS FOUND.

2. SFTY CLS: AN "E" IN THIS FIELD INDICATES THAT THE DEVICE, INSTRUMENT, EQUIPMENT, OR PANEL SHALL BE MANUFACTURED, FABRICATED, ASSEMBLED, AND INSTALLED TO MEET SAFETY CLASS 1 DBE REQUIREMENTS - A "3" IN THIS FIELD INDICATES NO SPECIAL DBE REQUIREMENTS.

3. INSTRUMENT TAG NUMBER: DEFINED ON P&ID LEGEND.

4. SERVICE DESCRIPTION: ABBREVIATED DESCRIPTION OF INSTRUMENT SERVICE.

5. DCS I\O: IDENTIFIES INSTRUMENT THAT IS CONNECTED TO THE HWVP DISTRIBUTED CONTROL SYSTEM (DCS). THE DCS IS BY BUYER.

6. PNL\RACK: IDENTIFIES THE INSTRUMENT RACK OR LOCAL CONTROL PANEL WHERE INSTRUMENT IS LOCATED. INSTRUMENTS THAT ARE NOT ON A RACK OR PANEL HAVE AN 'NA' IN THE FIELD.

7. BLDG NO: HWVP BUILDING NUMBER. FOR THIS CONSTRUCTION PACKAGE THE APPLICABLE NUMBERS ARE:

BLDG NO	BLDG NAME
20	FIRE WATER TANK AND PUMP HOUSE
21	RAW WATER PUMP HOUSE
23	SANITARY WATER / RAW WATER MANIFOLD SHELTER

8. ROOM NO: ROOM NUMBER IN THE INDICATED BUILDING.

9. SPEC SECT NO: SECTION OF PACKAGE SPECIFICATION THAT COVERS THE INSTRUMENT. THE COMPLETE SPECIFICATION NUMBER IS B-595-C-A160-XXXXX, WHERE XXXXX IS THE SPECIFICATION SECTION NUMBER FOUND IN THE COLUMN.

10. CNST PKG: THE CONSTRUCTION PACKAGE IS A160.

11. INSTRUMENT TYPE: THIS AREA SHOWS INSTRUMENT DESCRIPTIONS FOR PHYSICAL INSTRUMENTS OR REFERENCES THE SCHEMATIC DRAWING FOR LOGIC.

TRADEMARK
WESTINGHOUSE HANFORD COMPANY

THIS PAGE INTENTIONALLY
LEFT BLANK

U.S. DEPARTMENT OF ENERGY
HANFORD WASTE VITRIFICATION PLANT
RICHLAND, WASHINGTON
DOE CONTRACT DE-AC06-86RL10838

ENGINEERING INSTRUMENT INDEX
12/16/91

P&ID NUMBER	SHT	SFTY CLS	INSTRUMENT TAG NUMBER	SERVICE DESCRIPTION	DCS I\O	PNL \ RACK	BLDG NO	RM NO	SPEC NO	CNST PKG	INSTRUMENT TYPE
123351	01	3	XCV-420-113	HPS HDR	N	NA	20	0	17801	A160	STEAM TRAP-TD
123351	01	3	XCV-420-114	HPS HDR	N	NA	20	0	17801	A160	STEAM TRAP-TD
123351	01	3	XCV-420-115	HPS HDR	N	NA	20	0	17801	A160	STEAM TRAP-TD
123351	01	3	XCV-420-116	HPS HDR	N	NA	20	0	17801	A160	STEAM TRAP-TD
123358	01	3	HS-500-101	RAW WTR BSTR PMP A	N	LP-500-001A	21	0	15540	A160	HAND SWITCH
123358	01	3	KS-500-101	RAW WTR BSTR PMP A	N	LP-500-001A	21	0	15540	A160	TIMING RELAY
123358	01	3	YC-500-101	RAW WTR BSTR PMP A	Y	LP-500-001A	21	0	15540	A160	VENDOR SCHEMATIC
123358	01	3	HS-500-102	RAW WTR BSTR PMP B	N	LP-500-001B	21	0	15540	A160	HAND SWITCH
123358	01	3	KS-500-102	RAW WTR BSTR PMP B	N	LP-500-001B	21	0	15540	A160	TIMING RELAY
123358	01	3	YC-500-102	RAW WTR BSTR PMP B	N	LP-500-001B	21	0	15540	A160	VENDOR SCHEMATIC
123358	01	3	IT-500-103	RAW WTR BSTR PMP A MOTOR	Y	LP-500-001A	21	0	15540	A160	CURRENT XMTR
123358	01	3	II-500-103A	RAW WTR BSTR PMP A MOTOR	N	LP-500-001A	21	0	15540	A160	ELECT INDICATOR
123358	01	3	IT-500-104	RAW WTR BSTR PMP B MOTOR	Y	LP-500-001B	21	0	15540	A160	CURRENT XMTR
123358	01	3	II-500-104A	RAW WTR BSTR PMP B MOTOR	N	LP-500-001B	21	0	15540	A160	ELECT INDICATOR
123358	01	3	PI-500-106	RAW WTR BSTR PMP A DSCH	N	NA	21	0	17801	A160	PRESS GAUGE
123358	01	3	PI-500-107	RAW WTR BSTR PMP B DSCH	N	NA	21	0	17801	A160	PRESS GAUGE
123358	01	3	YC-500-109	RAW WTR BSTR PMP DSCH VLV	Y	LP-500-001B	21	0	15540	A160	VENDOR SCHEMATIC
123358	01	E	YV-500-109	RAW WTR BSTR PMP DSCH VLV	N	NA	21	0	17801	A160	N/F BUTTERFLY VLV
123358	01	E	YY-500-109	RAW WTR BSTR PMP DSCH VLV	Y	NA	21	0	17801	A160	SOL PILOT
123358	01	E	ZSH-500-109	RAW WTR BSTR PMP DSCH VLV	Y	NA	21	0	17801	A160	VLV LIMIT SWITCH
123358	01	E	ZSL-500-109	RAW WTR BSTR PMP DSCH VLV	Y	NA	21	0	17801	A160	VLV LIMIT SWITCH
123358	01	E	PSL-500-111	RAW WTR BSTR PMP DSCH HDR	Y	NA	21	0	17801	A160	PRESS SWITCH
123358	01	E	PSL-500-112	4TH ST RAW WTR DSCH HDR	Y	NA	23	0	17801	A160	PRESS SWITCH
123358	01	E	PV-500-112	4TH ST RAW WTR SUPPLY VLV	N	NA	23	0	17801	A160	N/F BUTTERFLY VLV
123358	01	E	PY-500-112	4TH ST RAW WTR SUPPLY VLV	Y	NA	23	0	17801	A160	SOL PILOT
123358	01	E	ZSH-500-112	4TH ST RAW WTR SUPPLY VLV	Y	NA	23	0	17801	A160	VLV LIMIT SWITCH

ATTACHMENT B

THIS PAGE INTENTIONALLY
LEFT BLANK

U.S. DEPARTMENT OF ENERGY
HANFORD WASTE VITRIFICATION PLANT
RICHLAND, WASHINGTON
DOE CONTRACT DE-AC06-86RL10838

ENGINEERING INSTRUMENT INDEX
12/16/91

P&ID NUMBER	SHT	SFTY CLS	INSTRUMENT TAG NUMBER	SERVICE DESCRIPTION	DCS I\O	PNL \ RACK	BLDG NO	RM NO	SPEC NO	CNST PKG	INSTRUMENT TYPE
123358	01	E	ZSL-500-112	4TH ST RAW WTR SUPPLY VLV	Y	NA	23	0	17801	A160	VLV LIMIT SWITCH
123358	01	E	PI-500-113	RAW WTR VLV AIR SUPPLY	N	NA	23	0	WHC	A160	GAS REG GAUGE
123358	01	E	PI-500-114	4TH ST RAW WTR DSCH HDR	N	NA	23	0	17801	A160	PRESS GAUGE
123358	01	E	PCV-500-115	RAW WTR VLV AIR SUPPLY	N	NA	23	0	WHC	A160	GAS REG
123358	01	3	PI-500-117	RAW WTR BSTR PMP DSCH	N	NA	21	0	17801	A160	PRESS GAUGE
123358	01	E	PI-500-118	RAW WTR VLV AIR SUPPLY	N	NA	23	0	WHC	A160	GAS REG GAUGE
123358	01	3	PI-500-191	FIRE WTR	N	NA	20	0	15501	A160	PRESS GAUGE
123358	01	3	PI-500-192	FIRE WTR	N	NA	20	0	15501	A160	PRESS GAUGE
123358	01	3	PSH-500-193	FIRE WTR FLOW TRIP	N	NA	20	0	15501	A160	PRESS SWITCH
123358	01	3	PI-500-194	FIRE WTR	N	NA	21	0	15501	A160	PRESS GAUGE
123358	01	3	PI-500-195	FIRE WTR	N	NA	21	0	15501	A160	PRESS GAUGE
123358	01	3	PSH-500-196	FIRE WTR FLOW TRIP	N	NA	21	0	15501	A160	PRESS SWITCH
123358	02	E	LIT-500-201	FIRE & PROC WTR STO TK	Y	NA	20	0	17801	A160	DP IND XMTR
123358	02	3	LI-500-202	FIRE & PROC WTR STO TK	N	NA	20	0	17801	A160	FLOAT AND TAPE LEVEL
123358	02	3	TSHL-500-203	FIRE & PROC WTR STO TK	N	NA	20	0	17801	A160	TEMP SWITCH
123358	02	E	TW-500-203	FIRE & PROC WTR STO TK	N	NA	20	0	17801	A160	THERMOWELL
123358	02	E	FAH-500-204	JOCKEY PUMP MIN-FLOW RECIRC	N	LP-500-007	20	0	17801	A160	ANNUN WINDOW
123358	02	E	FE-500-204	JOCKEY PUMP MIN-FLOW RECIRC	N	NA	20	0	17801	A160	ORIFICE PLATE
123358	02	E	FIC-500-204	JOCKEY PUMP MIN-FLOW RECIRC	N	LP-500-007	20	0	17801	A160	ELECT PWR CONT
123358	02	E	FIT-500-204	JOCKEY PUMP MIN-FLOW RECIRC	N	NA	20	0	17801	A160	DP IND XMTR
123358	02	E	FSH-500-204	JOCKEY PUMP MIN-FLOW RECIRC	N	LP-500-007	20	0	17801	A160	ELECT SWITCH
123358	02	E	FV-500-204	JOCKEY PUMP MIN-FLOW RECIRC	N	NA	20	0	17801	A160	MOD GLOBE VALVE
123358	02	E	FY-500-204	JOCKEY PUMP MIN-FLOW RECIRC	N	NA	20	0	17801	A160	I/P CONVERTER
123358	02	E	HS-500-205	JOCKEY PUMP	N	LP-500-004	20	0	15540	A160	HAND SWITCH
123358	02	E	HS-500-206	FIRE WTR TK HTR	N	LP-500-006	20	0	15505	A160	HAND SWITCH
123358	02	3	YC-500-206	FIRE WTR TK HTR	N	LP-500-006	20	0	15505	A160	VENDOR SCHEMATIC
123358	02	E	HS-500-207	FIRE WTR HTR PMP	N	LP-500-007	20	0	17801	A160	HAND SWITCH

THIS PAGE INTENTIONALLY
LEFT BLANK

U.S. DEPARTMENT OF ENERGY
HANFORD WASTE VITRIFICATION PLANT
RICHLAND, WASHINGTON
DOE CONTRACT DE-AC06-86RL10838

ENGINEERING INSTRUMENT INDEX
12/16/91

P&ID NUMBER	P&ID SHT	SFTY CLS	INSTRUMENT TAG NUMBER	SERVICE DESCRIPTION	DCS I\O	PNL \ RACK	BLDG NO	RM NO	SPEC NO	CNST PKG	INSTRUMENT TYPE
123358	02	3	YC-500-207	FIRE WTR HTR PMP	N	LP-500-007	20	0	17801	A160	SCHEM DWG 122099-1
123358	02	3	TAH-500-208	FIRE WTR TK HTR OUTLET	N	LP-500-007	20	0	17801	A160	ANNUN WINDOW
123358	02	3	TSH-500-208	FIRE WTR TK HTR OUTLET	N	NA	20	0	17801	A160	TEMP SWITCH
123358	02	3	TW-500-208	FIRE WTR TK HTR OUTLET	N	NA	20	0	17801	A160	THERMOWELL
123358	02	3	LE-500-209	FIRE & PROC WTR STO TK	N	NA	20	0	17801	A160	CAP LEVEL PROBE
123358	02	3	LSH-500-209	FIRE & PROC WTR STO TK	N	NA	20	0	17801	A160	CAP LEVEL SWITCH
123358	02	3	LSL-500-209A	FIRE & PROC WTR STO TK	N	NA	20	0	17801	A160	CAP LEVEL SWITCH
123358	02	3	LSL-500-209B	FIRE & PROC WTR STO TK	N	NA	20	0	17801	A160	CAP LEVEL SWITCH
123358	02	3	HS-500-210	FIRE & PROC WTR STO TK MAKE UP	N	LP-500-007	20	0	17801	A160	HAND SWITCH
123358	02	3	YC-500-210	FIRE & PROC WTR STO TK MAKE UP	N	LP-500-007	20	0	17801	A160	SCHEM DWG 122099-1
123358	02	E	YV-500-210	FIRE & PROC WTR STO TK MAKE UP	N	NA	20	0	17801	A160	N/F BUTTERFLY VLV
123358	02	E	YY-500-210	FIRE & PROC WTR STO TK MAKE UP	N	NA	20	0	17801	A160	SOL PILOT
123358	02	3	HS-500-211	PROC WTR PMP A	N	LP-500-005A	20	0	15540	A160	HAND SWITCH
123358	02	3	KS-500-211	PROC WTR PMP A	N	LP-500-005A	20	0	15540	A160	TIMING RELAY
123358	02	3	YC-500-211	PROC WTR PMP A	Y	LP-500-005A	20	0	15540	A160	VENDOR SCHEMATIC
123358	02	3	HS-500-212	PROC WTR PMP B	N	LP-500-005B	20	0	15540	A160	HAND SWITCH
123358	02	3	KS-500-212	PROC WTR PMP B	N	LP-500-005B	20	0	15540	A160	TIMING RELAY
123358	02	3	YC-500-212	PROC WTR PMP B	Y	LP-500-005B	20	0	15540	A160	VENDOR SCHEMATIC
123358	02	3	PSV-500-213	FIRE WTR TK HTR OUTLET	N	NA	20	0	17801	A160	RELIEF VALVE
123358	02	3	TI-500-214	FIRE WTR TK HTR OUTLET	N	NA	20	0	17801	A160	THERMOMETER
123358	02	3	TW-500-214	FIRE WTR TK HTR OUTLET	N	NA	20	0	17801	A160	THERMOWELL
123358	02	3	HS-500-215	FIRE WTR PMP A	N	LP-500-002A	21	0	15540	A160	HAND SWITCH
123358	02	E	KS-500-215	FIRE WTR PMP A	N	LP-500-002A	20	0	15540	A160	TIMING RELAY
123358	02	E	YC-500-215	FIRE WTR PMP A	Y	LP-500-002A	20	0	15540	A160	VENDOR SCHEMATIC
123358	02	E	ZAL-500-216	FIRE WTR PMP B SUCT VLV	N	LP-500-002B	20	0	15540	A160	ANNUN WINDOW
123358	02	E	ZSL-500-216	FIRE WTR PMP B SUCT VLV	N	NA	20	0	15061	A160	VLV LIMIT SWITCH
123358	02	E	FE-500-217	FIRE & PROC WTR STO TK MAKE UP	N	NA	20	0	17801	A160	ORIFICE PLATE

ATTACHMENT B

THIS PAGE INTENTIONALLY
LEFT BLANK

U.S. DEPARTMENT OF ENERGY
HANFORD WASTE VITRIFICATION PLANT
RICHLAND, WASHINGTON
DOE CONTRACT DE-AC06-86RL10838

ENGINEERING INSTRUMENT INDEX
12/16/91

P&ID NUMBER	SHT	SFTY CLS	INSTRUMENT TAG NUMBER	SERVICE DESCRIPTION	DCS I\O	PNL \ RACK	BLDG NO	RM NO	SPEC NO	CNST PKG	INSTRUMENT TYPE
123358	02	E	FIT-500-217	FIRE & PROC WTR STO TK MAKE UP	Y	NA	20	0	17801	A160	DP IND XMTR
123358	02	3	FI-500-217A	FIRE & PROC WTR STO TK MAKE UP	N	LP-500-007	20	0	17801	A160	ELECT INDICATOR
123358	02	3	JIC-500-218	FIRE WTR TK HTR	N	LP-500-006	20	0	15505	A160	ELECT PWR CONT
123358	02	3	TE-500-218	FIRE WTR TK HTR	N	NA	20	0	15505	A160	RTD
123358	02	3	TIC-500-218	FIRE WTR TK HTR	N	LP-500-006	20	0	15505	A160	ELECT CONTROL
123358	02	3	TALL-500-227	FIRE & PROC WTR STO TK	N	LP-500-007	20	0	17801	A160	ANNUN WINDOW
123358	02	3	TSLL-500-227	FIRE & PROC WTR STO TK	N	NA	20	0	17801	A160	TEMP SWITCH
123358	02	E	TW-500-227	FIRE & PROC WTR STO TK	N	NA	20	0	17801	A160	THERMOWELL
123358	02	E	HS-500-229	FIRE WTR PMP B	N	LP-500-002B	20	0	15540	A160	HAND SWITCH
123358	02	E	KS-500-229	FIRE WTR PMP B	N	LP-500-002B	20	0	15540	A160	TIMING RELAY
123358	02	E	YC-500-229	FIRE WTR PMP B	Y	LP-500-002B	20	0	15540	A160	VENODR SCHEMATIC
123358	02	E	PSL-500-230	JOCKEY PUMP DSCH	Y	NA	20	0	17801	A160	PRESS SWITCH
123358	02	3	PAL-500-230B	JOCKEY PUMP DSCH	N	LP-500-004	20	0	15540	A160	ANNUN WINDOW
123358	02	E	PSL-500-231	FIRE WTR HDR	N	NA	20	0	17801	A160	PRESS SWITCH
123358	02	E	PSL-500-232	FIRE WTR HDR	N	NA	20	0	17801	A160	PRESS SWITCH
123358	02	E	ZAL-500-233	FIRE WTR PMP B DSCH VLV	N	LP-500-002B	20	0	15540	A160	ANNUN WINDOW
123358	02	E	ZSL-500-233	FIRE WTR PMP B DSCH VLV	N	NA	20	0	15061	A160	VLV LIMIT SWITCH
123358	02	E	ZAL-500-234	FIRE WTR PMP A SUCT VLV	N	LP-500-002A	20	0	15540	A160	ANNUN WINDOW
123358	02	E	ZSL-500-234	FIRE WTR PMP A SUCT VLV	N	NA	20	0	15061	A160	VLV LIMIT SWITCH
123358	02	E	ZAL-500-235	FIRE WTR PMP A SUCT VLV	N	LP-500-002A	20	0	15540	A160	ANNUN WINDOW
123358	02	E	ZSL-500-235	FIRE WTR PMP A SUCT VLV	N	NA	20	0	15061	A160	VLV LIMIT SWITCH
123358	02	3	FSL-500-236	FIRE WTR TK HTR OUTLET	N	NA	20	0	17801	A160	FLOW SW PADDLE TYPE
123358	02	E	PSV-500-238	FIRE WTR PMP A OUTLET	N	NA	20	0	17801	A160	RELIEF VALVE
123358	02	E	PSV-500-239	FIRE WTR PMP A OUTLET	N	NA	20	0	17801	A160	RELIEF VALVE
123358	02	E	PI-500-241	JOCKEY PUMP DSCH	N	NA	20	0	17801	A160	PRESS GAUGE
123358	02	E	PI-500-242	FIRE WTR HTR PUMP DSCH	N	NA	20	0	17801	A160	PRESS GAUGE
123358	02	E	PI-500-243	FIRE WTR HTR PUMP A DSCH	N	NA	20	0	17801	A160	PRESS GAUGE

ATTACHMENT B

THIS PAGE INTENTIONALLY
LEFT BLANK

U.S. DEPARTMENT OF ENERGY
HANFORD WASTE VITRIFICATION PLANT
RICHLAND, WASHINGTON
DOE CONTRACT DE-AC06-86RL10838

ENGINEERING INSTRUMENT INDEX
12/16/91

P&ID NUMBER	P&ID SHT	SFTY CLS	INSTRUMENT TAG NUMBER	SERVICE DESCRIPTION	DCS I\O	PNL \ RACK	BLDG NO	RM NO	SPEC NO	CNST PKG	INSTRUMENT TYPE
123358	02	3	TI-500-244	FIRE & PROC WTR STO TK	N	NA	20	0	17801	A160	THERMOMETER
123358	02	E	TW-500-244	FIRE & PROC WTR STO TK	N	NA	20	0	17801	A160	THERMOWELL
123358	02	3	FO-500-245	PROCESS WTR PUMPS MIN-FLOW	N	NA	20	0	17801	A160	RESTRICTION ORIF
123358	02	3	PI-500-246	PROCESS WTR PUMP B DSCH	N	NA	20	0	17801	A160	PRESS GAUGE
123358	02	E	PI-500-247	FIRE WTR PUMPS HDR	N	NA	20	0	17801	A160	PRESS GAUGE
123358	02	E	PI-500-248	FIRE WTR PUMP B DSCH	N	NA	20	0	17801	A160	PRESS GAUGE
123358	02	3	PI-500-250	PROCESS WTR PUMP A DSCH	N	NA	20	0	17801	A160	PRESS GAUGE
123358	02	E	FE-500-251	FIRE WTR PUMP SYS DSCH	N	NA	20	0	15540	A160	ANNUBAR
123358	02	E	FI-500-251	FIRE WTR PUMP SYS DSCH	N	NA	20	0	15540	A160	DP GAUGE
123358	02	E	IT-500-252	FIRE WTR PUMP A MOTOR	Y	LP-500-002A	20	0	15540	A160	CURRENT XMTR
123358	02	E	II-500-252B	FIRE WTR PUMP A MOTOR	N	LP-500-002A	20	0	15540	A160	ELECT INDICATOR
123358	02	E	IT-500-253	FIRE WTR PUMP B MOTOR	Y	LP-500-002B	20	0	15540	A160	CURRENT XMTR
123358	02	E	II-500-253B	FIRE WTR PUMP B MOTOR	N	LP-500-002B	20	0	15540	A160	ELECT INDICATOR
123359	01	3	PI-490-110	SANITARY WTR HDR	N	NA	21	0	17801	A160	PRESS GAUGE
123359	01	3	PI-490-311	SANITARY WTR HDR	N	NA	23	0	17801	A160	PRESS GAUGE
123361	07	3	LE-530-806	EFFL DSCH COLL SUMP	N	NA	21	0	17801	A160	CAP LEVEL PROBE
123361	07	3	LSH-530-806	EFFL DSCH COLL SUMP	Y	NA	21	0	17801	A160	CAP LEVEL SWITCH
123361	07	3	LSL-530-806	EFFL DSCH COLL SUMP	Y	NA	21	0	17801	A160	CAP LEVEL SWITCH
123361	07	3	PI-530-810	EFFL DSCH COLL SUMP PUMP	N	NA	21	0	17801	A160	PRESS GAUGE
123361	07	3	PI-530-811	EFFL DSCH COLL SUMP PUMP	N	NA	21	0	17801	A160	PRESS GAUGE

ATTACHMENT B

THIS PAGE INTENTIONALLY
LEFT BLANK

SECTION 17705
INSTRUMENT CALIBRATION AND CHECKOUT
(SAFETY CLASS 3)

PART 1 GENERAL

1.1 SUMMARY

This section includes the technical requirements for the instrument calibration and checkout for the mechanical site utilities instrumentation.

1.2 REFERENCES

The publications listed below form a part of this specification to the extent referenced. The publications are referred to in the text by basic designation only.

AMERICAN PETROLEUM INSTITUTE (API)

API STD-527	1978 Commercial Seat Tightness of Safety Relief Valves with Metal-To-Metal Seats (R 1988)

AMERICAN SOCIETY OF MECHANICAL ENGINEERS (ASME)

ASME Boiler and Pressure Vessel Codes	1989 BPVC Section VIII Rules for Construction of Pressure Vessels Division 1; Addenda - 1989, Addenda - 1990 (Interfiled)

AMERICAN SOCIETY FOR TESTING AND MATERIALS (ASTM)

ASTM A269	1990 Standard Specification for Seamless and Welded Austenitic Stainless Steel Tubing for General Service
ASTM B75	1986 Standard Specification for Seamless Copper Tube

1.3 RELATED REQUIREMENTS

Specification Section 17703	Instrument Piping Materials
Specification Section 17704	General Instrumentation Installation and Testing
Specification Section 17801	Mechanical Site Utilities Instrumentation

9 2 1 2 4 1 3 0 5 1 7

1.4 DEFINITIONS

Reference Accuracy -- In process instrumentation, a number or quantity that defines a limit that error will not exceed when a device is used under specified operating conditions. Error represents the difference between the measured value and the standard or real value.

Allowable Value -- The limiting value that the trip setpoint can have when tested periodically, beyond which the instrument channel is declared inoperable and corrective action must be taken.

Bias -- A voltage or current combined with a signal to shift its zero point by a desired amount.

Calibration -- Refers to the operation to be performed on all instruments and control devices requiring testing and/or adjusting to ensure that they are functioning correctly and are accurate within the manufacturer's specifications.

Checkout -- Refers to the functions required to ensure that all instrumentation are per specification and installed correctly, properly calibrated, functionally operational, and ready for Buyer acceptance.

Drift -- An undesired change in output over a period of time, which is unrelated to the input, environment, or load.

Error -- The undesired algebraic difference between a value that results from measurement and a corresponding true value.

Hysteresis -- That property of an element evidenced by the dependence of the value of the output, for a given excursion of the input, upon the history of prior excursions and the direction of the current traverse.

Instrument Range -- The region between the limits within which a quantity is measured, received, or transmitted, expressed by stating the lower and upper range values.

Measurement Standard -- Those devices used to calibrate M&TE or other measurement standards and provide traceability.

Measuring and Test Equipment (M&TE) -- All devices used to measure, gauge, test, inspect, or otherwise determine compliance with prescribed technical requirements.

9 2 1 2 4 1 3 0 6 1 8

Precision Calibration Test Equipment -- This indicates a highly accurate piece of instrumentation test hardware, in the order of 0.1 to 0.001 percent accuracy or better; utilized in the field for calibration of operational instrumentation and control systems. A ratio of at least 4 to 1 or better in relative accuracies is required, however, a ratio of 10 to 1 is recommended for best results. The calibration equipment must be checked against a lab standard traceable to the National Institute of Standards and Technology (NIST).

RTD -- Resistance Temperature Device

Repeatability -- The closeness of agreement among a number of consecutive measurements of the output for the same value of the input under the same operating conditions, approaching from the same direction, for full-range traverses.

Tolerance -- The allowable variation, plus or minus, from a specified or true value.

Traceability -- The ability to relate individual measurement results through an unbroken chain of calibrations to one or more of the following:

U.S. national standards maintained by the National Institute of Standards and Technology (NIST) and the U.S. Naval Observatory;

Fundamental or natural physical constants with values assigned or accepted by the NIST;

National standards of other countries which are correlated with U.S. national standards.

Trip Setpoint -- A predetermined value at which a bistable device changes state to indicate that the quantity under surveillance has reached the selected value.

1.5 SYSTEM DESCRIPTION

This specification section establishes the requirements for the calibration and checkout of all instrumentation and control devices. This section is for out of cell instrumentation only and will be performed subsequent to Specification Section 17704, General Instrumentation Installation and Testing. Bench calibration shall be required for all I&C devices upon receipt on site and prior to installation as specified in Paragraph 3.2. Related Documents listed in Paragraph 1.3 support this general installation specification. The scope of work in this section includes calibration and checkout of instruments on skid mounted systems.

1.6 **SUBMITTALS**

Submit the following in accordance with the Vendor Drawing and Data Requirements section of the Order/Subcontract.

1.6.1 Calibration

1.6.1.1 Calibration Equipment List: Listing all calibration equipment used on the job and the last date that the equipment was calibrated.

1.6.1.2 Calibration Log Sheet: Listing all instruments to be calibrated, anticipated calibration date, set points, ranges, accuracy required and date of completion.

1.6.1.3 Calibration Test Report: The Seller shall prepare formal field calibration test reports for each instrument. The test reports shall be complete as required in Paragraphs 3.3.1 and contain as a minimum the following information:

1) Job Title.

2) Date of Test.

3) Instrument serial number and tag number.

4) Specific type of test.

5) Description of test instrument and date of calibration.

6) Sections of specification defining test.

7) Test results.

8) Test by.

9) Comments, if any, in the approved test procedure for the system.

10) Signature of Seller's test supervisor.

11) Signature or stamp of Buyer's representative.

1.6.1.4 Calibration Test Procedure: Based on types of instrumentation to be tested.

1.6.1.5 Instrumentation Installation and Test Report: See Specification Section 17704, General Instrumentation Installation and Testing.

9 2 1 2 4 1 3 0 6 2 0

1.6.1.6 Valve Data Test Report: Listing all valves to be tested, and all test parameters identified in manufacturers' data.

1.6.1.7 Continuity Check Record: Listing of each loop or system number and completion certification with signatures included.

1.6.1.8 Punch list, listing of configuration changes and other action items.

1.7 **PROJECT OR SITE ENVIRONMENTAL CONDITIONS**

1.7.1 Climatic and Geographic Site Conditions

A. Site Elevation 714 feet above sea level

B. Barometric Pressure 14.3 psia

C. Outside Design Temperature

1) Maximum Design Temperature 110°F

2) Minimum Design Temperature -20°F

3) Wet Bulb Design Temperature 68°F

1.7.2 Operating Environment

A. Normal Temperature -20°F to 110°F

B. Relative Humidity Not Controlled

PART 2 PRODUCTS

2.1 **MATERIALS AND EQUIPMENT**

2.1.1 General Requirements

2.1.1.1 Furnish all precision calibration and test hardware, and support material except as noted on Contract Drawings.

2.1.1.2 Provide, and maintain in calibration and in working condition, all tools and test equipment necessary for the performance and completion of all work specified.

2.1.1.3 All instruments, equipment, temporary connections (both electrical and pneumatic) and support materials shall be new and unused. Materials used shall be in accordance with Specification Section 17703, Instrument Piping Materials. Materials, tolerances, and testing requirements for interconnecting stainless steel and copper tubing are in accordance with ASTM Standard Specifications A269 and B75.

2.2 TEST MEASUREMENT EQUIPMENT

2.2.1 All installed instrumentation and controls shall be calibrated utilizing precision calibration and testing equipment, as noted above, and as further defined in Paragraph 3.1 and related manufacturer's manuals.

2.2.2 All calibrating and testing equipment used for calibration of an instrument shall have its serial number and last date of calibration recorded on the Calibration Equipment List. The Calibration Equipment List shall be maintained by the Seller and submitted to the Buyer prior to use. Calibrating equipment calibration interval shall be no more than 3 months and the calibration standard shall have traceability to the National Institute of Standards and Technology. If an item of calibration equipment is found to be out of calibration, the Seller shall recalibrate all instruments calibrated with this equipment since the last calibration date.

2.2.3 The Calibration Equipment List shall also include the make, model, serial number and acceptable limits of all instruments and gauges used for calibration and testing. This listing shall include the instrument and/or gauge manufacturer's data sheet(s) which specify calibration requirements. The accuracy and readability of the calibration device shall be stated and must exceed the accuracy of the devices being calibrated by a factor of 4 or more. In no case shall the accuracies of these calibration instruments be less than 0.1 percent.

2.2.4 The Calibration Equipment List for the calibration devices shall be maintained by the Seller for inspection by the Buyer Representative and shall be turned over to the Buyer at job completion.

9 2 1 2 4 1 7 0 6 2 2

PART 3 EXECUTION

3.1 PREPARATION

3.1.1 Instrument Calibration

A. Calibration shall consist of the application of a precision input signal and measurement of the output signal by a precision digital meter or gauge. It shall be done in accordance with instructions contained in maintenance and operating instructions furnished by the manufacturer with each type of instrument or system. Specifically, the calibration shall verify that the accuracy (input vs. output), range linearity and hysteresis, meet the specification and are within the manufacturer's guarantees. NOTE: No attempt shall be made to adjust instruments that test within the manufacturer's specification. When required, calibration adjustments shall only be performed to the degree necessary to achieve compliance with the specification.

B. Instruments shall be inspected and calibrated in accordance with this specification before installation.

C. Instruments which are received in the field already mounted, such as panel boards, prefabricated houses, or mechanical equipment, shall be calibrated in place.

D. Seller shall submit for approval a Calibration Test Procedure for each type of instrument to be calibrated at least 30 days prior to the test.

3.1.2 Calibration Standards and Procedures

A. Calibration equipment shall be checked at least once every three (3) months against a lab standard traceable to a recognized national standard to ensure accuracy to specified tolerances. All calibration checks shall be logged on the Calibration Equipment List.

B. All fluids introduced to instrument bodies for the purpose of calibration, or for any other purpose, shall be compatible with the wetted material of the instrument and the fluid with which the instrument will be filled during normal operation. Fluid shall be drained from all instruments after calibration. NOTE: Use distilled water when calibrating instruments with stainless steel materials.

C. All devices will be calibrated prior to installation where practical. The date of calibration and expiration date

shall be recorded on the Calibration Test Report. Calibration standards used shall be traceable to a recognized source, such as the National Institute of Standards and Technology. The calibration expiration date shall be no later than the prior calibration date plus the manufacturer's recommended calibration interval. A distinctive tag or label shall be affixed to the instrument indicating it has been calibrated and is ready for installation. The calibration tag or sticker shall have the date calibrated, calibration expiration date, and the name of the test technician. Calibration labels shall be removable. This sticker shall not interfere with installation, operation or readability of the device.

D. All switching devices actuated by process variables, electrical variables, or analog signals shall be set to open or close on increase or decrease in input signal at the settings specified in the specification and then be exercised over full range to verify repeatability. Switch dead band before resetting shall be noted on the Calibration Test Report.

E. All analog devices shall be measured at 5 points (0-25-50-75-100 percent). As received results shall be recorded on the Calibration Test Report before attempting adjustment if necessary. All instruments shall be adjusted to within manufacturer's guaranteed accuracy as defined in the instruction manual or on the data sheet. Those which exhibit any malfunction or inaccuracy, even in portions of their range where they are not expected to function in normal operation, shall be considered unacceptable. Instruments deeded as unacceptable shall be identified and corrective action taken by the Seller.

F. Instruments shall only be subjected to the normal operating pressures, etc., indicated on the instrument specification sheets. They shall not be calibrated to function at any range other than those within the manufacturer's recommended range or subjected to pressure, voltage, etc., beyond the manufacturer's rating.

G. Every instrument shall be individually calibrated by applying measured inputs and measuring the outputs. In no case shall two or more instruments be gang calibrated as, for example, by providing measured pressure into a transmitter and then adjusting the receiver gauge to agree.

H. Pressure instruments shall be calibrated to cancel static-heads due to difference in elevation between the root connection and instrument (if range requires).

9 2 1 2 4 1 3 0 6 2 4

I. All calibrations shall be performed twice and in both directions, upscale and downscale. This will identify and quantify hysteresis, repeatability and dead band.

J. When an instrument has been calibrated, a Calibration Test Report shall be submitted. This report shall contain all pertinent information as noted in this specification, including "as found" and "as left" data.

K. Note that no attempt shall be made to adjust instruments that test within the manufacturer's specifications. When required, calibration adjustments shall only be performed to the degree necessary to achieve compliance with the specification.

3.2 INSTALLATION, APPLICATION AND ERECTION

3.2.1 Temperature Instruments

A. Bimetal dial thermometers shall be checked at ambient temperature (if in the meter span), or otherwise in lower 1/4 of scale; and one other temperature in the normal operating range. These points shall be at least 50 percent of scale apart.

3.2.2 Pressure Instruments

A. Pressure and pressure differential transmitters shall be calibrated by providing an input from a precision calibrator and monitoring the output with a precision meter or gauge.

B. Electronic pressure indicators, recorders and controllers shall be calibrated against a precision calibrator.

3.2.3 Pressure Gauges

A. Pressure gauges shall be calibrated using a precision calibrator.

3.2.4 Flow Instruments

A. Differential pressure type flow instruments shall be calibrated by providing an input from a precision calibrator and monitoring the output with a precision meter or gauge.

3.2.5 Level Instruments

A. Differentials pressure type level instruments shall be calibrated by providing an input from a precision calibrator and monitoring the output with a precision meter or gauge. Zero elevation or suppression as specified in the instrument specification shall be accounted for in the calibration procedure.

B. Capacitance type level sensors shall be calibrated in accordance with the manufacturer's instructions.

C. Float type level sensors shall be checked for proper operation over the full range by indexing the float and verifying the output by comparison with the actual float level. The zero calibration point on scale shall be set at the level of suction.

3.2.6 Control Valves

A. All pneumatically operated diaphragm control valves without positioners shall be stroked using a precision calibrator against the spring range shown on the nameplate.

B. All pneumatically operated diaphragm control valves with positioners shall be calibrated as a unit using a precision calibrator input to the positioners against the spring range shown on the nameplate. Verify seating and travel, set the position indicator and check valve failure action and record on the valve data test report.

C. ON-OFF control valves shall be stroked by simulating signals to energize and de-energize the pilot solenoid valve and the stroking time shall be recorded. Verification of closing time requirements and failure modes shall also be done and recorded as part of the test documentation.

3.2.7 Pressure Regulators

A. Self-contained pressure regulators will not be calibrated. Setting shall be verified before installation (check hardware tag with specification requirements).

3.2.8 Safety Relief Valves

A. Safety relief valves shall be bench set and leak tested. All safety relief valves shall be tested according to API STD 527, Commercial Seat Tightness of Safety Relief Valves with Metal-to-Metal Seats. All steam safety valves shall be

9 2 1 2 4 1 3 0 6 2 6

set according to the ASME Boiler and Pressure Vessel Code, Section VIII.

B. Valve data shall be verified and actual settings recorded on the valve data test report.

C. Valves shall be protected from dust and moisture after testing.

3.2.9 Alarm Switches and Electrical Devices

A. Differential pressure switches, pressure switches and electronic switches shall be calibrated by using the input from a precision calibrator and monitoring the switch action with an ohmmeter.

B. Snap-acting relays, selector relays, and other two-position devices shall be calibrated by using a precision calibrator as input and monitoring the output by a meter or gauge.

C. Solenoid valves shall be checked for conformance to the manufacturer's specifications. They shall also be operationally checked and failure position noted.

3.2.10 Transducers

A. Current to pressure (I/P) transducers shall be calibrated using a precision current input and monitoring output with a precision gauge.

3.2.11 Panel Instruments and Panel Board

A. Panels and instruments are tested and calibrated at the Seller's shop before shipment.

B. Panel-mounted receivers, controllers and other devices shall be verified by providing an input from a precision calibrator and monitoring the output with a precision meter or gauge. Ensure that the proper scaled chart is in place for all recorders.

3.2.12 Special Package Systems

A. Special package instrument systems, such as for heaters and pumps shall be completely field verified including calibration and switch settings with vendor calibration and test reports. Instruments removed for shipment shall be calibrated prior to reinstallation on package units.

3.3 FIELD QUALITY CONTROL

3.3.1 Test Equipment and Test Reports

A. Temporary test setups of calibration equipment shall be done in a safe and orderly manner to preclude damage to equipment or injury to personnel.

B. Ensure that all test equipment calibrations are up to date and that all necessary manufacturers technical data and operation and maintenance (O&M) manuals are available for each type of instrument to be calibrated or loop checked.

C. Verify that the Specification Section 17704, General Instrumentation Installation and Testing has been completed for the instrument and loop under test and that the appropriate Test Reports have been signed off and are on file.

D. The Seller shall prepare Calibration Log Sheet to document that all instrumentation calibrations, loop checkouts, and systems have been successfully completed in accordance with this Section.

E. Separate calibration test procedures for post-installation checkout shall be submitted to the Buyer for review 30 days before testing is to be performed.

F. Configuration changes to any system shall be made only with the Buyer's supervision and approval and must be recorded on a formalized discrepancy "action items" list or "punch list."

3.3.2 Instrument Checkout

A. General

1) Checkout shall consist of a thorough inspection of all components to verify that they are in accordance with Specification Section 17801, Mechanical Site Utilities Instrumentation, installed correctly, calibrated and functional. To ensure this status is achieved, the following shall be performed:

a) Calibration - This shall have been completed before start of final checkout. Records shall be available to verify that calibration is satisfactory.

b) Pressure Testing - This shall have been completed before start of final checkout. Records shall be available to verify this function.

c) Continuity testing, resistance testing, etc., shall have all been completed before checkout. A continuity check record shall be provided for testing verification.

B. Specific Items

1) A check, using Contract Drawings and the instrument manufacturer's installation instructions shall be made after installation to verify all instruments are correctly installed.

2) Each instrument installation shall be verified for correct and complete installation. Items to be checked shall include, but not be limited to manufacturers model number and nameplate data, instrument tagging, direction of flow through control valves, proper hookup of flow meters, and the installation of tubing for instruments and valves.

3) Thermocouples shall be verified with specification.

4) RTDs shall be verified with specification.

5) Orifice plates shall be visually verified for nameplate data and that they are installed in correct direction. Bore shall be calipered to verify compliance with the Seller's sizing calculations.

6) All control valve accessories, such as position switches, handwheels, boosters, and relays shall be visually inspected.

7) Butterfly valves shall be carefully checked to see that the valve disc moves freely into upstream and downstream piping. If "fishtail" type valves are used, verify that the "tail" is downstream.

8) Control valves and regulators shall be verified to ensure installation is in the correct orientation with the process flow.

9) Topworks shall be verified for acceptable orientation. Valve stems shall be clean of objectionable materials such as paint, concrete spatter, or protective tape. Limit and position switches and limit stops, where

9 2 1 2 4 1 3 0 6 2 9

required, shall have been installed and adjusted. Lubricators shall be installed where required.

10) Relief valves shall be verified against specifications and Contract Drawings to ensure proper valve is in place. They shall be checked to ensure no blinds or gags have been left in place.

11) Panel instruments and panels shall be verified as follows:

All nameplates, both front and rear, shall be verified for tag number, service, location and proper spelling.

END OF SECTION

9212413063 0

SECTION 17708
INSTRUMENT PIPING PRESSURE TESTING
(SAFETY CLASS 3)

PART 1 GENERAL

1.1 SUMMARY

This section includes the technical requirements and procedures for leak testing of instrument piping for the mechanical site utilities instrumentation. This piping is depicted on Contract Drawings and includes:

A. Instrument impulse tubing

B. Instrument pneumatic signal and air supply piping

C. Instrument air subheaders

Piping identified by line numbers on contract documents will be excluded from testing in accordance with this section.

1.2 REFERENCES

The publications listed below form a part of this specification to the extent referenced. The publications are referred to in the text by the basic designation only.

AMERICAN NATIONAL STANDARDS INSTITUTE (ANSI)

ANSI B31.1	1989 Power Piping
ANSI B31.3	1990 Chemical Plant and Petroleum Refinery Piping

INSTRUMENT SOCIETY OF AMERICA (ISA)

ISA RP7.1	1956 Pneumatic Control Circuit Pressure Test

1.3 RELATED REQUIREMENTS

Specification Section 17703	Instrument Piping Materials
Specification Section 17704	General Instrumentation Installation and Testing

9 2 1 2 4 1 3 0 6 3 1

1.4 **DEFINITIONS**

Installation - The term "installation" as used in this specification, shall be defined as follows: the placing of any component in its final position specified in the Contract Drawings and/or specifications. This includes welding, bolting or other joining for final operation of the component.

Impulse Tubing - The sensor line connecting a sensing instrument(s) to the commodity line(s), vessel(s) or equipment. The extent of impulse tubing shall be from the commodity pipe line "root" valve to the instrument connection and includes all valving, fittings, and test connections between these points.

Air Supply Tubing - Includes instrument air subheader from the block valve at the main air header to the regulator and the instrument air line after the regulator.

Root Valve - The valve used to block the commodity fluid from entering the impulse tubing. If more than one root valve is used, impulse tubing starts at the outermost (from commodity pipe line) valve connection.

PSIG - Pounds per square inch gauge

PPM - Parts per million.

1.5 **SYSTEM DESCRIPTION**

All components, fabrication, and testing, except as otherwise qualified herein, shall be in accordance with the requirements of ANSI B31.1, ANSI B31.3 and Specification Section 17703, Instrument Piping Materials, and Specification Section 17704, General Instrumentation Installation and Testing.

1.6 **SUBMITTALS**

Submit the following in accordance with the Vendor Drawing and Data Requirements section of the Order/Subcontract.

1.6.1 Certifications that shop and field testing conform to the requirements of this specification. The certificates shall include the Seller's authorized agent's signature and title.

1.6.2 A detailed plan for testing. As a minimum, this plan shall include a means of identifying instrument lines that are to be tested as a system, along with the method and locations of system isolation.

1.6.3 A plan or procedure for sealing open ends of instrument piping after pressure testing. The plan shall include a method of providing a waterproof seal and securement of the seal to the open ends of instrument piping.

1.6.4 A list of the actual equipment to be used for testing.

1.6.5 Notification of test dates.

1.6.6 Deviations from the testing procedures.

1.6.7 Instrument Piping Pressure Test Records

The Seller shall prepare and submit to the Buyer test records 30 days after test completion for all instrument piping systems requiring tests. The test record shall contain, as a minimum, the following data:

A. Job title

B. Date of test

C. Identification of instrument piping systems

D. Type of test, e.g., Impulse Air Supply

E. Ranges

1) Specified maximum pressure

2) Pressure applied

3) Material temperature

4) Length of time at test pressure

F. Test results

G. Test by

H. Signature of Seller's test supervisor

I. Comments, if any

J. Test gauge identification, calibration, and recalibration dates

K. Signature or stamp of the Buyer's representative

9 2 1 2 4 1 3 0 6 3 3

1.6.8 Manufacturer's testing instructions.

1.6.9 Submittal of Procedures.

1.7 **PROJECT OR SITE ENVIRONMENTAL CONDITIONS**

1.7.1 Climatic and Geographic Site Conditions

A. Site Elevation 714 feet above sea level

B. Barometric Pressure 14.3 psia

C. Outside Design Temperature

1) Maximum Design Temperature 110°F

2) Minimum Design Temperature -20°F

3) Wet Bulb Design Temperature 68°F

1.7.2 Operating Environment

A. Normal Temperature -20° to 110°F

B. Relative Humidity Not controlled

PART 2 PRODUCTS

2.1 **MATERIALS AND/OR EQUIPMENT**

2.1.1 Materials

2.1.1.1 Test Air - Dry, oil free (no greater than 10 ppm) air or nitrogen shall be used for pneumatic testing. Test air shall have a dew point of -20°F or less.

2.1.1.2 Leak Detector Solution - Leak detector solution for pneumatic testing shall be as manufactured by the Nupro Company, Snoop (or equal).

2.2 **FABRICATION AND MANUFACTURE**

2.2.1 Equipment

2.2.1.1 Precision Relays - Shall be of snap acting type with one percent throttling range. Manufacturer to be determined by the Seller.

2.2.1.2 Pressure Gauges - Gauge shall be marked in scale increments of 5 psig. Manufacturer to be determined by the Seller.

9212413063 4

2.2.1.3 Duplex Pressure Gauge - Shall be provided with red and black pointers. Manufacturer to be determined by Seller.

PART 3 EXECUTION

3.1 INSTALLATION, APPLICATION AND ERECTION

3.1.1 General

3.1.1.1 Unless specified otherwise within this document, leak testing shall be performed sequentially in accordance with the following order of operations.

A. Installation assemblies must be complete.

B. Purging - Instrument piping shall be purged clean with test air or nitrogen. Minimum purge velocity shall be obtained by applying three times the anticipated service pressure per Specification Section 17704, General Instrumentation Installation and Testing, Attachment A, Installation Index, to the line. Pipe cleanliness shall be checked by discharging the exhausted gas onto a clean white blotter for 15 seconds. The blotter shall be free of visual particulate matter after this test.

C. Pressure testing - See Paragraph 3.2.1 through Paragraph 3.2.5 of this specification section for the applicable test.

3.1.1.2 All piping assemblies or systems with unacceptable leaks, as determined by testing in accordance with this specification, shall be repaired and re-examined.

The Seller shall make provisions to exclude dirt, water, debris, etc., from entering the open ends of tested piping. These provisions shall be submitted to the Buyer for approval 30 days prior to the start of testing.

3.2 FIELD QUALITY CONTROL

3.2.1 Required Test

3.2.1.1 Impulse Tubing

Instrument impulse tubing shall be tested at 110 percent of the design pressure listed in the Piping Line List.

The Impulse Piping test pressures are listed, by instrument tag number in Specification Section 17704, General Instrumentation Installation and Testing, Attachment A, Installation Index.

3.2.1.2 Pneumatic Signal Leads

Transmitter leads, controller leads and tubing downstream of the filter-regulator shall be tested at 20 psig.

3.2.1.3 Air Subheader

Instrument air subheader lines and air supply lines to individual instruments whose normal operating pressure is not more than 150 psig may be tested at normal operating conditions with commodity carried. Instrument air lines operating over 150 psig shall be tested as an instrument impulse lead.

3.2.2 Pneumatic Test Preparation

3.2.2.1 Instrument piping systems shall be assembled and checked for complete compliance to the Contract Drawings and specification sections.

3.2.2.2 All joints shall be left uninsulated and exposed for examination during the test. Joints may be insulated or coated after test acceptance.

3.2.2.3 Installed instrument components shall be reviewed for their maximum pressure rating. If the rating is less than the test pressure, remove the component and install a temporary jumper line.

3.2.2.4 When a pressure test is required to be maintained for a period of time during which the testing medium in the system would be subject to thermal expansion, provision shall be made for relief of any pressure greater than the maximum test pressure.

3.2.2.5 In order to test as much piping as possible at one time, a systems test may be employed.

3.2.2.6 Pressure test gauges shall be calibrated once a month or following damage to the gauge (e.g., dropping or over pressuring). The calibration shall be made using a dead-weight tester. Calibration standards used shall be traceable to a recognized source, such as the National Institute of Standards and Technology. The gauge shall be tagged with the latest calibration, and recalibration dates, which shall also be recorded by the Seller.

3.2.2.7 Any leaks located during testing shall be repaired in accordance with appropriate contract specification sections and drawings, after releasing the test pressure.

9 2 1 2 4 1 3 0 6 3 6

3.2.3 Pneumatic Test Procedure

3.2.3.1 Pneumatic leak testing is broken into two categories: impulse tubing and air supply tubing. Refer to Paragraph 3.2.1 to determine the appropriate test and pressure to use.

3.2.3.2 Impulse Tubing

3.2.3.3 Instrument impulse tubing leak test pressures are listed, by instrument tag number, in Specification Section 17704, General Instrumentation Installation and Testing, Attachment A, Installation Index. The instrument maximum pressure rating shall be verified from the manufacturer's data. If the leak test pressure exceeds the instrument's maximum pressure rating, the instrument shall be removed from the piping prior to leak testing.

3.2.3.4 Prior to testing, the "root" valve(s) shall be closed.

3.2.3.5 Connect the test assembly (see Attachment A) supplied by the Seller to the instrument impulse piping.

3.2.3.6 The section under test shall be initially charged (pressured) to 25 psig, or 50 percent of the listed minimum test pressure, whichever is lower, to audibly locate major leaks. Any leaks located shall be repaired in accordance with Contract Drawings and specification sections listed in Paragraph 1.3 after first releasing the pressure from the system.

3.2.3.7 The test pressure shall be gradually increased in steps of 5 psig, or 10 percent of the listed minimum test pressure, whichever is greater. Test pressures shall be maintained for a minimum of 10 minutes at each step. If, at any step, the test gauge drops in pressure, within the 10 minute increment, the test assembly shall be visibly examined with leak detector solution (see Paragraph 2.1.1.2). Detected leaks shall be marked, then repaired after first releasing test pressure from the line.

3.2.3.8 When the minimum leak test pressure is reached, and no audible evidence of leakage is detected, leak detector solution shall be swabbed on all joints. The joints shall be visibly examined for bubbling of detector solution. Detected leaks shall be marked, then repaired after first releasing test pressure from the line.

3.2.3.9 If the repair of leaks is minor, such as tightening of threaded joints, the previous test pressure may be resumed in 2 equal steps after retesting at 25 psig. If the repair is major, a complete retest shall be performed.

3.2.3.10 Impulse tubing with test pressures listed at 25 psig or less may be tested with just 2 step pressures.

3.2.3.11 Final pneumatic test pressures shall be maintained for a sufficient length of time to permit thorough visual examination of all joints, but not less than 15 minutes.

3.2.4 Air Supply Tubing

3.2.4.1 Prior to leak testing, all instrument components within the tubing system shall be verified for tolerance to the test pressure. If the leak test pressure exceeds the component's pressure rating, that component shall be removed from the system prior to testing. The component maximum pressure rating may be verified from the manufacturer's data.

3.2.4.2 Air consuming pilots, such as valve positioners, shall be disconnected during leak testing. Tubing plugs or caps shall be used to seal open ends of tubing during test. Precautions shall be taken to avoid injury from plugs potentially popping during testing.

3.2.4.3 The test assembly shall be in accordance with ISA RP7.1 and connected (see Attachment B) to the dry air supply and the tubing assembly being tested. In the event that instrument air is not available at the time of testing, instrument quality air from a compressor, bottled dry air, or nitrogen may be used as a test medium. Instrument quality air shall meet the requirements given in Paragraph 2.1.1.1 for Test Air.

3.2.4.4 Open the toggle valve and adjust the pressure regulator until the red pointer reads 20 psig. Adjust the precision relay until the black pointer also reads 20 psig.

3.2.4.5 Close the toggle valve. A drop in pressure, as indicated by the black pointer, indicates a leak.

3.2.4.6 Locate the leak(s) using leak detector solution.

3.2.4.7 Leaks which cause the black pointer (Attachment B) to decrease at a rate of 1 psig per 100 feet of 1/4 inch tubing in five seconds or less (1 psig per 200 feet of 1/4 inch tubing in 10 seconds or less) are not acceptable. Instrument air leads that terminate in control valve topworks shall be corrected by converting the topworks capacity to equivalent length of tubing by means of the following table:

9 2 1 2 4 1 3 0 5 3 8

Conventional Control Valve Topworks	Approximate Equivalent Feet of 1/4 Inch Tubing
Valves with positioners	0
11 inch O.D. Topworks	104
15 inch O.D. Topworks	385
17 inch O.D. Topworks	770
20 inch O.D. Topworks	1,050

3.2.5 Test Completion

3.2.5.1 In the event that repairs or additions are made following leak testing, the affected lines shall be retested at the pressure originally specified.

3.2.5.2 After completion of testing, all temporary lines, plugs or equipment shall be removed and the tested portion returned to its operating configuration as shown on the Contract Drawings.

END OF SECTION

9 2 1 2 4 1 3 0 6 3 9

THIS PAGE INTENTIONALLY
LEFT BLANK

INSTALLATION PIPING PRESSURE TESTING

ATTACHMENT A

INSTRUMENT PIPING LINE
PNEUMATIC TEST ASSEMBLY

ITEM

1. REGULATOR W/GAUGES
2. GAUGE, MARKED IN 5 PSIG INCREMENTS, RANGE AS REQUIRED
3. RELIEF VALVE
4. 1/4 INCH ZERO LEAKAGE SHUTOFF VALVE

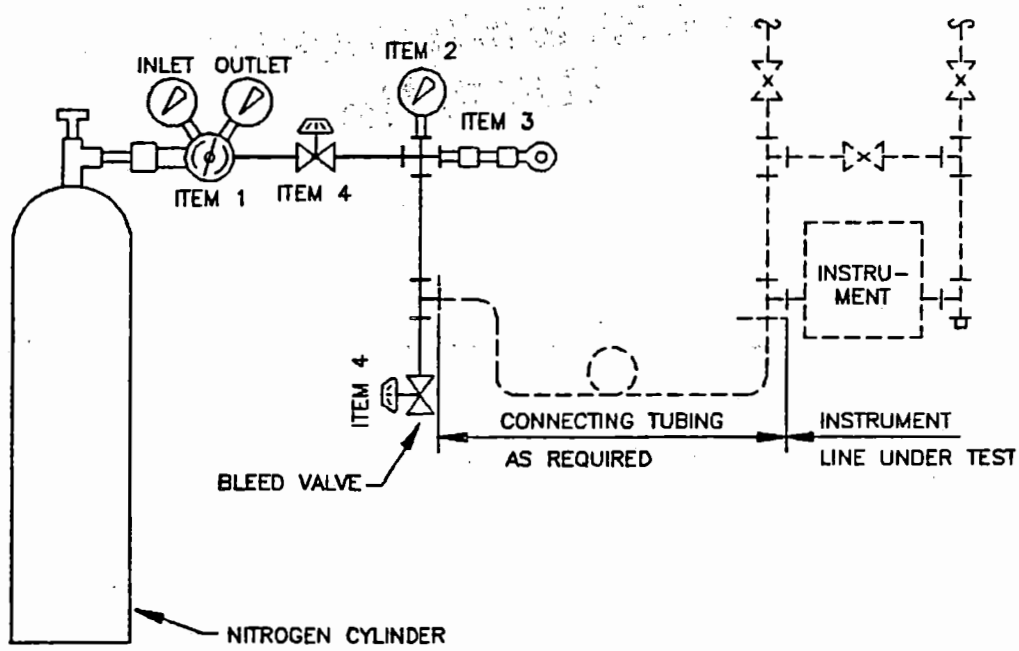

NOTE: SUPPORT REGULATOR AND PIPING AS REQUIRED.

9 2 1 2 4 1 3 0 6 4 0

THIS PAGE INTENTIONALLY
LEFT BLANK

INSTALLATION PIPING PRESSURE TESTING

ATTACHMENT B

INSTRUMENT PIPING PNEUMATIC
SIGNAL LINE TEST ASSEMBLY

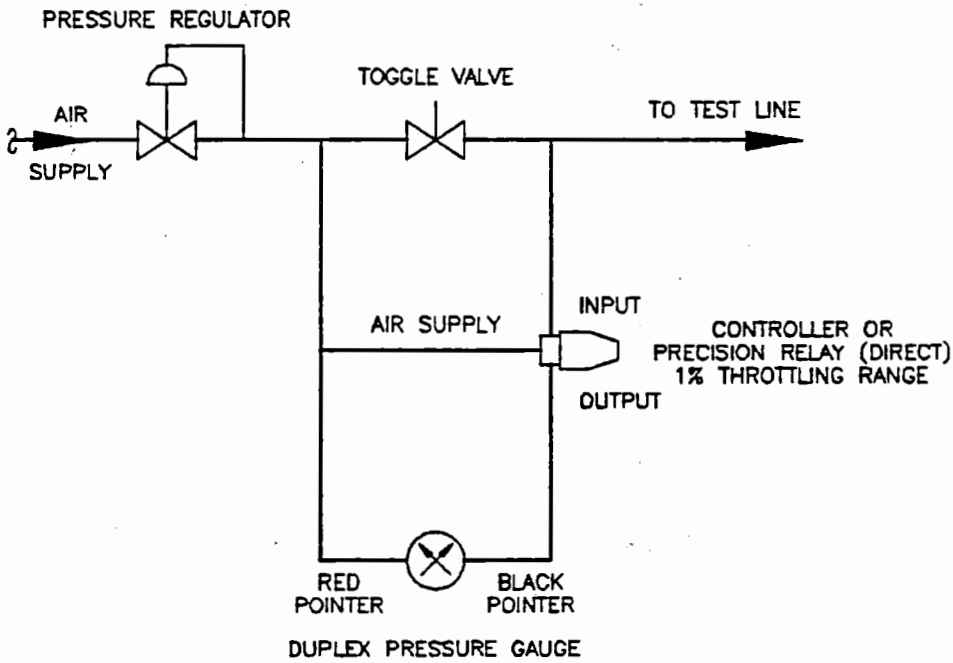

THIS PAGE INTENTIONALLY
LEFT BLANK

SECTION 17801
MECHANICAL SITE UTILITIES INSTRUMENTATION
(SAFETY CLASS 3, RATED FOR SAFETY CLASS 1 DBE AS NOTED)

PART 1 GENERAL

1.1 SUMMARY

This section includes the technical requirements for the furnishing, inspecting, and testing of the mechanical site utilities instrumentation.

1.2 REFERENCES

The publications listed below form a part of this specification to the extent referenced. The publications are referred to in the text by the basic designation only.

AMERICAN GAS ASSOCIATION (AGA)

AGA REPORT NO. 3	1985 Manual of Petroleum Measurement Standards Chapter 14 - Natural Gas Fluids Measurement Section 3 - Orifice Metering of Natural Gas and Other Related Hydrocarbon Fluids; Errata - 1985

AMERICAN NATIONAL STANDARDS INSTITUTE (ANSI)

ANSI B1.20.1	1983 Pipe Threads, General Purpose (Inch)
ANSI B16.5	1988 Pipe Flanges and Flanged Fittings; Errata - October 1988
ANSI B16.10	1986 Face-To-Face and End-To-End Dimensions of Valves

AMERICAN PETROLEUM INSTITUTE (API)

API STD 526	1984 Flanged Steel Safety Relief Valves Third Edition
API STD 527	1978 Commercial Seat Tightness of Safety Relief Valves with Metal-To-Metal Seats, Second Edition, Revision 1988

AMERICAN SOCIETY OF MECHANICAL ENGINEERS (ASME)

ASME Boiler and Pressure Vessel Codes	1989 BPVC Section VIII Rules for Construction of Pressure Vessels Division 1; Addenda - December 1989 (Interfiled)

AMERICAN SOCIETY FOR TESTING AND MATERIALS (ASTM)

ASTM A105/A105M	1987 Standard Specification for Forgings, Carbon Steel, for Piping Components, Revision A - 1987
ASTM A167 REV A	1990 Standard Specification for Stainless and Heat-Resisting Chromium-Nickel Steel Plate, Sheet, and Strip
ASTM A182/A182M	1990 Standard Specification for Forged or Rolled Alloy-Steel Pipe Flanges, Forged Fittings, and Valves and Parts for High Temperature Service
ASTM A216/A216M	1989 Standard Specification for Steel Castings, Carbon, Suitable for Fusion Welding, for High Temperature Service
ASTM A351/A351M	1989 Standard Specification for Castings, Austenitic, Austenitic-Ferritic (Duplex), for Pressure-Containing Parts, Revision B - 1989

FACTORY MUTUAL (FM)

Directory	1991 Approval Guide

FEDERAL STANDARDS (FED-STD)

FED-STD-595B	1989 Colors Used in Government Procurement

FLUID CONTROLS INSTITUTE, INC. (FCI)

FCI 70-2	1976 Control Valve Seat Leakage, Revision 1982

INSTITUTE OF ELECTRICAL AND ELECTRONIC ENGINEERS (IEEE)

IEEE STD 344	1987 Recommended Practice for Seismic Qualification of Class 1E Equipment for Nuclear Power Generating Stations

INSTRUMENT SOCIETY OF AMERICA (ISA)

ISA RP60.6	1984 Nameplates, Labels and Tags for Control Centers
ISA S20	1981 Specification Forms for Process Measurement and Control Instruments, Primary Elements and Control Valves
ISA S75.04	1984 Face-To-Face Dimensions for Flangeless Control Valves (ANSI Classes 150, 300, and 600)

NATIONAL ELECTRICAL MANUFACTURERS ASSOCIATION (NEMA)

NEMA 250	1985 Enclosures for Electrical Equipment (1000 Volts Maximum), Revision 2 - May 1988
NEMA ICS 6	1988 Enclosures for Industrial Controls and Systems, Revision 1 - March 1989

NATIONAL FIRE PROTECTION ASSOCIATION (NFPA)

NFPA 20	1990 Standard for the Installation of Centrifugal Fire Pumps
NFPA 70	1990 National Electrical Code

UNDERWRITERS LABORATORIES INC. (UL)

Directory	1991 Electric Appliance and Utilization Equipment Directory
Directory	1991 Recognized Component Directory
UL 83	1983 Thermoplastic-Insulated Wires and Cables Ninth Edition; February 22, 1989
UL 429	1982 Electrically Operated Valves, Third Edition, November 1988

1.3 RELATED REQUIREMENTS

Specification Section 01730	Operation and Maintenance Data
Specification Section 16100	Electrical Installation
Specification Section 16110	Electrical Materials and Devices

Specification Section 17703	Instrument Piping Materials
Specification Section 17704	General Instrumentation Installation and Testing
Specification Section 17705	Instrument Calibration and Checkout
Drawing H-2-121660	Instrument Panel Layout, LP-500-007

1.4 DEFINITIONS

C	-	Common
CS	-	Carbon Steel
CV	-	Control Valve
dB	-	Decibels (Sound Power Level)
DBE	-	Design Basis Earthquake
DOE	-	Department of Energy
D/P	-	Differential Pressure
DPDT	-	Double Pole Double Throw
FF	-	Flat Face
FNPT	-	Female National Pipe Thread
GPM	-	Gallons Per Minute
HWVP	-	Hanford Waste Vitrification Plant
IAS	-	Instrument Air Supply
I/O	-	Input/Output
I/P	-	Current-to-Pneumatic (Converter)
LED	-	Light Emitting Diode
LP	-	Local Panel
LS	-	Level Switch
MNPT	-	Male National Pipe Thread
NC	-	Normally Closed

9 2 1 2 4 1 3 0 6 4 5

NIC	-	Not In Contract
NPT	-	National Pipe Thread
NRC	-	Nuclear Regulatory Commission
OBE	-	Operating Basis Earthquake
PCV	-	Pressure Regulator (Self-Actuated)
PSIA	-	Pounds per Square Inch Absolute
PSID	-	Pounds per Square Inch Differential
PSIG	-	Pounds per Square Inch Gauge
PSV	-	Pressure Safety (Relief) Valve
RAM	-	Random Access Memory
RF	-	Raised Face
RFI	-	Radio Frequency Interference
RMS	-	Root Mean Square
SPDT	-	Single Pole Double Throw
SS	-	Stainless Steel
TFE	-	Polytetrafluorethylene (Teflon or equal)
XCV	-	Steam Trap
ZSH	-	Valve Open Position Switch
ZSL	-	Valve Closed Position Switch

1.5 **SUBMITTALS**

Submit the following in accordance with the Vendor Drawing and Data Requirements section of the Order/Subcontract.

1.5.1 Catalog information: Including overall dimensions, center of gravity, weight, model number, and connection sizes.

1.5.2 Certified drawings: Fully dimensioned and detailed component, assembly, outline, and layout drawings pertinent to each item. The size and location of all attachment points (bolt, flanges,

etc.) as well as all pertinent mounting details and the thickness of instrument/panel material at the attachment points shall be shown.

1.5.3 Manufacturer's installation, operating, and maintenance manuals in accordance with Section 01730, Operation and Maintenance Data.

1.5.4 Wiring diagrams including termination connections as applicable to instruments and controls.

1.5.5 Manufacturer's calibration instructions including calibration curves/tables.

1.5.6 Detailed parts list including manufacturer's part numbers.

1.5.7 Recommended spare parts list for one year's performance.

1.5.8 Inspection/Test Report in accordance with Paragraph 2.32.3.12.

1.5.9 Manufacturer's calculated noise level for all pressure regulators and control valves at normal and maximum flow.

1.5.10 Control valve, relief valve, orifice plate, restriction orifice and pressure regulator sizing calculations.

1.5.11 Schematic piping drawings, including connection sizes as applicable to instruments and controls with pipe or tubing connections.

1.5.12 Documentation stamped by a Professional Engineer registered by the State of Washington stating that control panel tag number LP-500-007 meets the requirements of Paragraph 2.25.1.4 of this specification section.

1.5.13 Data sheets: The Seller shall submit completed instrument data sheets similar to ISA-S20, Specification Forms for Process Measurement and Control Instruments, Primary Elements and Control Valves.

1.6 **PROJECT OR SITE ENVIRONMENTAL CONDITIONS**

1.6.1 Climatic and Geographic Site Conditions

A. Site Elevation 714 feet above sea level

B. Barometric Pressure 14.3 psia

C. Outside Design Temperature

1) Maximum Design Temperature 110°F

9 2 1 2 4 1 3 0 6 4 7

2) Minimum Design Temperature -20°F

3) Wet Bulb Design Temperature 68°F

1.6.1.1 Operating Environment

A. Normal Temperature -20° to 110°F

B. Relative Humidity Not controlled

1.6.2 Project Utility Source Design Information (Utility Interfaces) for Valve and Orifice Sizing

A. HPS - High Pressure Steam - 200 East Area, 225 psig, at 396°F, 8,450 lbs./hr., steam main at B-Plant.

B. SWX - Sanitary Water - 200 East Area, sanitary water from near B-Plant, at 65 psig, 40°F to 70°F, and 710 feet elevation.

C. SWX - Sanitary Water - sanitary water supply from south of 4th street at 65 psig, total of 1200 gpm for Paragraph 1.6.2.B and C, 40°F to 70°F, and 710 feet elevation.

D. RWX - Raw Water - raw water supply at 47 psig, 3000 gpm, 40°F to 70°F, and 710 feet elevation.

E. RWX - Raw Water - 200 east area raw water supply at 47 psig, 1300 gpm, 40°F to 70°F, and 710 feet elevation.

1.6.3 Project seismic information (instruments and control panels) - see Attachments A and B. All instruments and control panels are Safety Class 3. Certain instruments and control panels are rated for a Safety Class 1 DBE. See Engineering Instrument Index (Specification Section 17704, General Instrumentation installation and Testing, Attachment B) for identification of applicable seismic rating.

PART 2 PRODUCTS

2.1 MATERIALS AND EQUIPMENT - DIAL THERMOMETERS

2.1.1 General Requirements

2.1.1.1 The following dial thermometers and thermowells shall be assembled, furnished, and installed:

TAG NUMBER	RANGE	OPERATING TEMPERATURE	CONNECTION RATING AND TYPE	"U" DIM.
TI-500-214	30°F - 130°F	60°F	½ in. male NPT	See Note
TI-500-244	30°F - 130°F	60°F	½ in. male NPT	See Note
TW-500-214	-	-	150 lbs, 1½ in. R.F. Flange	6 in.
TW-500-244	-	-	300 lbs, 1½ in. R.F. Flange	12 in.

NOTE: The Seller shall size the dial thermometers stem length to match the thermowells insertion length ("U" Dim.).

2.1.1.2 Dial thermometers shall be bimetallic seal type, heavy duty, adjustable viewing angle, hermetically sealed, non-reset with external adjustment feature, Ashcroft Series EL or equal.

2.1.1.3 When two or more components of the same specifications are required, the components shall be identical (same manufacturer and catalog number).

2.1.1.4 Thermowells made of Type 304 stainless steel shall be furnished.

2.2 **OPERATING AND DESIGN CONDITIONS - DIAL THERMOMETERS**

2.2.1 The case shall be stainless steel. The dial shall be white painted nonrusting metal with black digits 1°F/division and graduation marks. The glass shall be shatter resistant.

2.2.2 Dials shall be 5 inch nominal diameter.

2.2.3 Stems shall be 1/4 inch diameter Type 304 stainless steel.

2.2.4 The dial thermometer connections shall be 1/2 inch MNPT.

2.2.5 All threaded connections shall be in accordance with ANSI B1.20.1.

2.2.6 All flanged connections shall be in accordance with ANSI B16.5.

2.2.7 Accuracy shall be ±1 percent of scale range.

2.3 **MATERIALS AND EQUIPMENT - DIFFERENTIAL PRESSURE TRANSMITTERS, ELECTRONIC**

2.3.1 General Requirements

2.3.1.1 The following electronic differential pressure transmitters shall be assembled, furnished, and installed:

TAG NUMBER	MOUNTING	RANGE
LIT-500-201	3 in. 150 lbs. R.F. Flange	0 to 750 in. water
FIT-500-204	2 in. Yoke	0 to 30 in. water
FIT-500-217	2 in. Yoke	0 to 100 in. water

2.3.1.2 Electronic differential pressure transmitters shall be provided with smart electronics and shall be furnished with 2 inch diameter 0 to 100% indicators.

2.3.1.3 Transmitters shall be two wire electronic type with 4-20 mA dc output signal, user selectable for linear or square root output, with a superimposed digital process variable signal that is available to a host. LIT-500-201 shall be a Rosemount Model 1151LT or equal flange mounted transmitter. FIT-500-204 and FIT-500-217 shall be a Rosemount Model 1151DP or equal differential pressure transmitter.

2.3.1.4 Threaded connections shall be in accordance with ANSI B1.20.1.

2.3.1.5 Loop power supply shall be 24 Vdc.

2.3.1.6 Radio frequency interference (RFI) protection against hardware damage and system errors shall be provided for the equipment being furnished. The effects of RFI on the transmitter shall be less than ±0.1% of span when tested with grounded conduit from 20 to 1000 MHz with a field strength up to 30 volts/meter.

2.3.1.7 When two or more components of the same specifications are required, the components shall be identical (same manufacturer and catalog number).

2.4 **OPERATING AND DESIGN CONDITIONS - DIFFERENTIAL PRESSURE TRANSMITTERS, ELECTRONIC**

2.4.1 Differential pressure transmitters shall be designed to accurately measure to within ±0.25 percent of actual differential pressure

span. The accuracy includes nonlinearity, hysteresis, and repeatability.

2.4.2 Zero and span drift due to ambient temperature variations shall be limited to 2.5%/30°F.

2.4.3 Transmitter shall have overpressure protection of at least 15 psid for ranges less than 2.25 inches of H_2O and at least 500 percent of full scale for ranges greater than 2.25 inches of H_2O.

2.4.4 Zero and span shall be field adjustable and with less than 0.01 percent full scale variation per volt change in power supply.

2.4.5 Transmitter and associated electronics shall be housed in a NEMA 4 enclosure which complies with the classifications of NEMA 250.

2.4.6 Pressure connections shall be 1/2 inch NPT.

2.4.7 Electrical conduit connection shall be 1/2 inch NPT hub connection. Terminal strips shall be provided for wiring connections.

2.4.8 Instruments shall be fully adjustable over entire range.

2.4.9 The transmitter shall perform continuous diagnostics, be capable of self test functions and be able to provide specific diagnostic information to a host interface, such as, sensor failure, circuit board failure, span failure, pressure range failure, and temperature range failure.

2.4.9.1 If the self-diagnostics detect a transmitter failure, the analog signal shall be driven either below 4 mA or above 20 mA to alert the system user. The high or low alarm signal shall be user-selectable.

2.4.10 The transmitter shall have the capability to accept and store information including range, date, descriptor, and tag number.

2.4.11 The transmitter shall be provided with a 316 stainless steel drain/vent valve. The transmitters shall be provided with a 2 inch mounting yoke as shown in Paragraph 2.3.1.1

9 2 1 2 4 1 3 0 6 5 1

2.5 MATERIALS AND EQUIPMENT - PRESSURE GAUGES

2.5.1 General Requirements

2.5.1.1 The following pressure gauges shall be assembled, furnished, and installed:

TAG NUMBER	RANGE	OPERATING PRESSURE	CONNECTION TYPE - LOCATION
PI-490-110	0 - 160 psig	70 psig	1/2 inch Male NPT - bottom
PI-490-311	0 - 160 psig	70 psig	1/2 inch Male NPT - bottom
PI-500-106	0 - 200 psig	130 psig	1/2 inch Male NPT - bottom
PI-500-107	0 - 200 psig	130 psig	1/2 inch Male NPT - bottom
PI-500-114	0 - 200 psig	130 psig	1/2 inch Male NPT - bottom
PI-500-117	0 - 160 psig	70 psig	1/2 inch Male NPT - bottom
PI-500-241	0 - 160 psig	105 psig	1/2 inch Male NPT - bottom
PI-500-242	0 - 60 psig	25 psig	1/2 inch Male NPT - bottom
PI-500-243	0 - 200 psig	130 psig	1/2 inch Male NPT - bottom
PI-500-246	0 - 160 psig	85 psig	1/2 inch Male NPT - bottom
PI-500-247	0 - 200 psig	130 psig	1/2 inch Male NPT - bottom
PI-500-248	0 - 200 psig	130 psig	1/2 inch Male NPT - bottom
PI-500-250	0 - 160 psig	85 psig	1/2 inch Male NPT - bottom
PI-530-810	0 - 60 psig	25 psig	1/2 inch Male NPT - bottom
PI-530-811	0 - 60 psig	25 psig	1/2 inch Male NPT - bottom

2.5.1.2 Pressure gauges shall be tested and calibrated at manufacturer's shop to the ranges given. The pressure gauges shown in the table in Paragraph 2.5.1.1 shall be Ashcroft Model Number 1279S or equal.

2.5.1.3 Threaded connections shall be in accordance with ANSI B1.20.1.

2.5.1.4 When two or more components of the same specifications are required, the components shall be identical (same manufacturer and catalog number).

9 2 1 2 4 1 3 0 6 5 2

2.6 OPERATING AND DESIGN CONDITIONS - PRESSURE GAUGES

2.6.1 Pressure gauges case sizes shall be:

Local mounted - 4-1/2 inches
Board mounted - 4-1/2 inches
Receiver - 2-1/2 inches

2.6.2 Connection shall be 1/2 inch MNPT for local and board mounted pressure gauges and 1/4 inch MNPT for receiver gauges.

2.6.3 Pressure elements shall be 316 stainless steel except that bronze elements may be used in air service.

2.6.4 Pressure gauge movements shall be hardened stainless steel. Bronze or stainless steel may be used with bronze tubes.

2.6.5 Overpressure protection shall be 1 and 1/3 times the maximum tube rating to prevent permanent set or loss of calibration from continuous overpressurization. Lower pressure range gauges which utilize wide bourdon tube design which inherently would not have the above characteristic shall be furnished with external gauge protectors for overpressure protection.

2.6.6 Cases for pressure gauges shall be black phenolic with a screwed ring or plastic turret with snap ring to hold the glass in place. Glass shall be shatter resistant type. Cases shall be weatherproof. Metal cases except for stainless steel shall be coated with epoxy black paint. Blowout protection shall be provided on all process service gauges connected directly to the pressure source. Rupture discs or blowout plugs shall be installed on the lower side of the case for local mounted gauges and on the back for board mounted gauges.

2.6.7 Dials shall be non-rusting metal, painted white, with black figures and graduations. Dial faces shall be marked with the words "Steel Tube" or "Stainless Steel Tube."

2.6.8 Pointers shall have micrometer adjustment and shall be field adjustable.

2.6.9 Accuracy shall be ±1/2 percent of maximum scale.

2.6.10 Pressure snubbers shall be provided for gauges in pulsating service.

9212413065 3

2.7 **MATERIALS AND EQUIPMENT - ORIFICE PLATES AND RESTRICTION ORIFICE**

2.7.1 General Requirements

2.7.1.1 The following orifice plates (FE tag numbers) and restriction orifice (FO tag number) shall be assembled, furnished, and installed:

TAG NUMBER	APPLICATION	MATING FLANGE
FE-500-204	Recirculation Control PX-500-004	300 lbs. 2 in. R.F. Flange
FE-500-217	Water Tank TK-500-001 Make-Up Control	300 lbs. 4 in. R.F. Flange
FO-500-245	Recirculation Control PX-500-005A and -005B	150 lbs. 3 in. R.F. Flange

2.7.1.2 Plate dimensions shall conform to the recommended dimensions table listed in AGA Report No. 3. The orifice plates and restriction orifice shall be manufactured by Daniel Industries, Inc. or equal.

2.7.1.3 When two or more components of the same specifications are required, the components shall be identical (same manufacturer and catalog number).

2.7.1.4 The Seller shall size the orifice plates and the restriction orifice for the conditions given. This information is to be submitted to the Buyer.

2.8 **OPERATING AND DESIGN CONDITIONS - ORIFICE PLATES AND RESTRICTION ORIFICES**

2.8.1 Orifice plates and restriction orifices shall be sharp edged concentric type.

2.8.2 Flange type restriction orifices shall be of the paddle type.

2.8.3 Orifice plates bore shall be to the nearest .005 inch for all sizes. The beta ratio shall be kept between 0.2 and 0.7.

2.8.4 Orifice plates material shall be in accordance with ASTM A167, Grade F304 (stainless steel).

2.8.5 Orifice plates shall be sized based on meter loss. Restriction orifices shall be sized based on total loss. The restriction orifice (Tag Number FO-500-245) for pump recirculation control shall be sized to allow 20 percent of the pump's total flow to be recirculated.

2.9 MATERIALS AND EQUIPMENT - LEVEL PROBES, CAPACITANCE TYPE

2.9.1 General Requirements

2.9.1.1 The following capacitance type level instruments shall be assembled, furnished, and installed:

TAG NUMBER	DESCRIPTION	SET POINT	FLUID
LE-500-209	Probe (4 in., 150 lbs., R.F. Flange Conn.)	-	Water
LSL-500-209A	Control Unit (Relay Contact)	27'-6"	-
LSL-500-209B	Control Unit (Relay Contact)	27'-6"	-
LSH-500-209	Control Unit (Relay Contact)	30'-11"	-
LE-530-806	Probe (4 in., 150 lbs., R.F. Flange Conn.)	-	Water
LSL-530-806	Control Unit (Relay Contact)	1'-0"	-
LSH-530-806	Control Unit (Relay Contact)	2'-4"	-

2.9.1.2 The switching range of all level switches shall include the set point. The level setpoints shall be independent from each other. The output relay shall be DPDT, rated 5 amps, 120 Vac, 60 Hz, resistive.

2.9.1.3 All level probes shall be factory tested in accordance with manufacturer's standards and procedures for the applicable pressure, temperature, and fluid. The probe and control unit shall be manufactured by Drexelbrook Engineering, Model Number 506-400D-1 or equal. The probes shall be stainless steel with a suitable dielectric insulation. The probes length shall be:

PROBE	PROBE LENGTH	PROBE CABLE LENGTH
LE-500-209	10 feet long	100 feet long
LE-500-806	7 feet long	25 feet long

2.9.1.4 The process connection for the sensing probe shall be 4 inch 150 pound R.F. flange.

2.9.1.5 When two or more components of the same specifications are required, the components shall be identical (same manufacturer and catalog number).

9212413065 5

2.10 **OPERATING AND DESIGN CONDITIONS - LEVEL PROBES, CAPACITANCE TYPE**

2.10.1 Level switch housing shall be designed for NEMA 4 per NEMA 250.

2.10.2 Electrical conduit connection shall be 1/2 inch knockout.

2.10.3 Threaded connections shall be in accordance with ANSI B1.20.1.

2.10.4 Flanged connections shall be in accordance with ANSI B16.5.

2.10.5 Instruments shall be fully adjustable over entire range.

2.10.6 The Seller shall provide the coaxial cable which connects the probe to the control unit. The length shall be as shown in Paragraph 2.9.1.3.

2.11 **MATERIALS AND EQUIPMENT - GLOBE TYPE CONTROL VALVE**

2.11.1 General Requirements

2.11.1.1 The following control valve including actuator and the appropriate accessories shall be assembled, furnished, and installed:

TAG NUMBER	FAILURE MODE	ACTUATOR	I/P CONVERTER	POSITIONER	FLUID	BODY SIZE
FV-500-204	Last Position (See Note)	Diaphragm Type	-	Yes	Water @ 60°F	1" 150# R.F. Flange
FY-500-204		-	Yes	-	-	-

NOTE: For FV-500-204, the Seller shall provide a switching valve and volume tank, piped and mounted, to allow the control valve to fail in the last position if the supply pressure is lost.

2.11.1.2 The unregulated instrument air supply pressure to the control valve is a minimum of 60 psig and a maximum of 150 psig, with a dewpoint of -20°F as a maximum.

2.11.1.3 The valve travel shall be clearly and permanently marked to indicate stem position. A position indicator with scale 0-100 percent open shall be included.

2.11.1.4 The direction of flow shall be clearly and permanently marked on the valve body.

2.11.1.5 The Seller shall size the valve and valve actuator for the service conditions given to verify suitable valve performance over the range of flow and pressure. The control valve shall be a Fisher Series EZ valve, equal percentage, micro-form, or equal. The

switching valve to obtain a last position failure mode shall be a Fisher Type 377 Series valve or equal. This information is to be submitted to the Buyer.

2.11.1.6 The Seller shall calculate anticipated noise level for the control valve at normal and maximum flow. This information is to be submitted to the Buyer. Noise greater than 90 dB, measured 3 feet from the piping and 3 feet downstream of the valve, is not permissible.

2.11.1.7 Where the material of construction for a component part is specified, the material supplied shall conform to the ASTM specifications as indicated below:

Carbon Steel (CS)	Castings-ASTM A216/A216M, GR WCB Forgings-ASTM A105/A105M
Stainless Steel (SS)	Castings-ASTM A351/A351M, GR CF8M Forgings-ASTM A182/A182M, GR F316 Forgings-ASTM A182/A182M, GR F304

2.11.1.8 The valve body material shall be carbon steel with hardened stainless steel trim.

2.11.1.9 Valve shut-off requirements shall be Class IV per FCI 70-2.

2.11.1.10 Seat leakage and testing shall be in accordance with FCI 70-2.

2.11.1.11 Items containing asbestos shall not be used or furnished with the control valve or accessories.

2.11.1.12 When two or more components of the same specifications are required, the components shall be identical (same manufacturer and catalog number).

2.12 **OPERATING AND DESIGN CONDITIONS - GLOBE TYPE CONTROL VALVE**

2.12.1 Single Seated Globe Valve

2.12.1.1 Single seated valve shall be top and bottom or heavy top guided. Single seated valve having top and bottom guides shall have interchangeable bonnet and bottom flanges.

2.12.1.2 All bonnets shall be bolted types. Valve shall be leakproof in any orientation of the stem.

2.12.1.3 Control valve shall be equipped with bolted type gland followers.

2.12.1.4 The valve stem shall be threaded and pinned to the valve plug.

2.12.1.5 Seat rings shall be threaded and shall have lugs for removal. Use of the manufacturer's standard inert thread lubricant is permitted, but sealing compounds or welding is not permitted.

2.12.1.6 The valve shall be 150 lbs., R.F. flanged. The valve shall have face-to-face dimensions in accordance with ANSI B16.10.

2.12.2 Cage Guided Globe Valve

2.12.2.1 The cage, seat, and sealing gaskets shall be removable through the top of the valve.

2.12.2.2 All bonnets shall be bolted type. Valve shall be leakproof in any orientation of the stem.

2.12.2.3 If controlled compression type gaskets are used between the seat ring and body web, they shall not be subject to inner valve seat ring loading and unloading.

2.12.2.4 The valve stem shall be threaded and pinned to the valve plug.

2.12.2.5 Valve shall be 150 lbs., R.F. flanged. The valve shall have face-to-face dimensions in accordance with ANSI B16.10.

2.12.2.6 Reduced trim for two nominal sizes smaller than the valve size shall be available for the valve size.

2.12.2.7 The valve stem finish shall be 5 micro inches rms or less.

2.12.2.8 Cage guided globe valve shall have the flow capacity changeable by replacing the cage. Hardened trim materials shall be Type 316 stainless steel.

2.12.3 End Connections

2.12.3.1 End connection shall be 150 lbs., R.F. flanged.

2.12.3.2 Flanged connections shall be in accordance with ANSI B16.5.

2.12.4 Valve Actuators

2.12.4.1 General

2.12.4.1.1 Valve actuator shall be sized to handle the maximum differential pressure.

2.12.4.1.2 Valve stem position shall be indicated on a reversible scale with the words "OPEN" and "CLOSED" at the stem travel limits. Scale shall be graduated to indicate intermediate positions in relation to full stroke.

2.12.4.1.3 In the opening direction, the actuator shall engage a stop which has sufficient area to absorb the maximum force of the actuator.

2.12.4.1.4 When travelling towards the "CLOSED" position, the valve plug shall seat before the actuator reaches its travel limit.

2.12.4.1.5 Pneumatic piping connections shall be 1/4 inch NPT, material shall be stainless steel in accordance with Specification Section 17703, Instrument Piping materials, Material Class "ZJ."

2.12.4.1.6 All threaded connections shall be in accordance with ANSI B1.20.1.

2.12.4.2 Spring and Diaphragm Actuators

2.12.4.2.1 Spring and diaphragm shall be fully enclosed. Springs shall be corrosion resistant to atmospheric conditions.

2.12.4.2.2 Valve positioners, current to pneumatic converters, and/or solenoids for spring and diaphragm actuators, shall be side mounted. Receiver type pressure gauges shall comply with the requirements of Paragraphs 2.5 and 2.6.

2.12.5 Accessories

2.12.5.1 General

2.12.5.1.1 All pneumatic piping shall be with 1/4 inch stainless steel tubing with stainless steel compression type fittings of the double ferrule type. Tubing and fittings shall be in accordance with Specification Section 17703, Instrument Piping Materials, Material Class "ZJ."

2.12.5.2 Valve Positioners

2.12.5.2.1 A valve positioner shall be provided and shall be mounted and piped.

2.12.5.2.2 The valve positioner shall be equipped with supply, input, and output gauges.

2.12.5.3 Filter-Regulator

2.12.5.3.1 Filter-regulator airsets shall be supplied, mounted, and piped.

2.12.5.3.2 The filter-regulator airsets shall be piped in accordance with Paragraph 2.12.5.1.1 of this specification section.

2.12.5.3.3 The filter-regulator airset shall be equipped with an integral output air gauge of appropriate range unless a supply air gauge

9 2 1 2 4 1 3 0 6 5 9

is provided on the valve. The gauges shall comply with the requirements of Paragraphs 2.5 and 2.6.

2.12.5.3.4 The filter-regulator airset shall be of all metal construction.

2.12.5.3.5 The filter-regulator airset shall be provided with internal relief.

2.12.5.3.6 The filter-regulator airset shall be sized to stroke the associated valve in a maximum of five seconds with 80 psig inlet pressure to regulator.

2.12.5.4 Current/Pneumatic Converter (Tag No. FY-500-204)

2.12.5.4.1 The current/pneumatic converter (I/P), shall be mounted and piped to the control valve.

2.12.5.4.2 The converter shall put out linear pressure signal of 3-15 psig for an input signal of 4-20 mA dc. Output shall not change more than 1 percent for a 5 psi change in supply pressure. Converter shall be accurate to ±1 percent of output range.

2.12.5.4.3 Input resistance of the converter shall not exceed 250 ohms.

2.12.5.4.4 Converter housing shall meet NEMA 4 requirements per NEMA 250.

2.12.5.4.5 Zero and span adjustment shall be concealed inside the cover and shall be provided with means to lock these adjustments.

2.12.5.4.6 Supply and output pressure connections shall be 1/4 inch NPT female per ANSI B1.20.1. Electrical conduit connection shall be 1/2 inch NPT.

2.12.5.4.7 The converter shall be field selectable for direct or reverse acting.

9 2 1 2 4 1 3 0 6 5 0

2.13 MATERIALS AND EQUIPMENT - BUTTERFLY TYPE CONTROL VALVES

2.13.1 General Requirements

2.13.1.1 The following control valves including actuators and the appropriate accessories shall be assembled, furnished, and installed:

TAG NUMBER	DESCRIPTION	VALVE HANDWHEEL	APPLICATION	BODY SIZE
YV-500-109	On-Off Control Valve	No	Water	10 in., 150 lbs. F.F. Flange
YY-500-109	Solenoid Valve (Pilot Valve)	-	IAS	-
ZSL-500-109	Limit Switch (Low) - DPDT	-	-	-
ZSH-500-109	Limit Switch (High) - DPDT	-	-	-
PV-500-112	On-Off Control Valve	Yes	Water	10 in., 150 lbs. F.F. Flange
PY-500-112	Solenoid Valve (Pilot Valve)	-	IAS	-
ZSL-500-112	Limit Switch (Low)- DPDT	-	-	-
ZSH-500-112	Limit Switch (High) - DPDT	-	-	-
YV-500-210	On-Off Control Valve	No	Water	4 in., 150 lbs. F.F. Flange
YY-500-210	Solenoid Valve (Pilot Valve)	-	IAS	

2.13.1.2 The unregulated instrument air supply pressure to the control valve is a minimum of 60 psig and a maximum of 150 psig, with a dewpoint of -20°F as a maximum. The instrument air is supplied by the Buyer.

2.13.1.3 The Seller shall size all valves and valve actuators for the service conditions given to verify suitable valve performance over the range of flows and pressures. The control valves shall be Posi-Seal/Fisher, Model A31 or equal. This information is to be submitted to the Buyer.

2.13.1.4 The Seller shall calculate anticipated noise level for all control valves at normal and maximum flow. This information is to be submitted to the Buyer. Noise greater than 90 dB, measured three feet from the piping and three feet downstream of the valve, is not permissible.

2.13.1.5 The direction of flow shall be clearly and permanently marked on the valve body.

2.13.1.6 The valve shaft shall be clearly and permanently marked to indicate disc position. A position indicator with scale 0-100 percent open shall be included.

2.13.1.7 Where the material of construction for a component part is specified, the material supplied shall conform to the ASTM specifications as indicated below:

Carbon Steel (CS)	Castings-ASTM A216/A216M, GR WCB Forgings-ASTM A105/A105M
Stainless Steel (SS)	Castings-ASTM A351/A351M, GR CF8M Forgings-ASTM A182/A182M, GR F316 or GR F304

2.13.1.8 The valve body and disc material shall be carbon steel. The stem and bearings shall be 316 stainless steel.

2.13.1.9 All valves shall be of a design that will not trap or pocket the process fluid in any portion of the valve, for any valve position.

2.13.1.10 Valve shut-off requirements shall be Class VI per FCI 70-2.

2.13.1.11 Seat leakage testing shall be in accordance with FCI 70-2.

2.13.1.12 Items containing asbestos shall not be used or furnished with control valves or accessories.

2.13.1.13 The valves shall be 150 lbs., F.F. insert (wafer type) with lug connections in accordance with ANSI B16.5.

2.13.1.14 When two or more components of the same specifications are required, the components shall be identical (same manufacturer and catalog number).

2.14 OPERATING AND DESIGN CONDITIONS - BUTTERFLY TYPE CONTROL VALVES

2.14.1 Butterfly Type Valves

2.14.1.1 Butterfly type valves shall be designed for 90 degree rotation of the disc provided by a totally enclosed linkage.

2.14.1.2 Valve connections shall be lugged wafer type. The valves shall have face-to-face dimensions in accordance with ISA S75.04.

2.14.1.3 Valves shall be full open port (port equal to line size).

9 2 1 2 4 1 3 0 6 6 2

2.14.1.4 Valves shall be designed with one piece shaft. The disc shall be pinned to the shaft. Shaft shall be of sufficient size and design to withstand full peak actuator stalling torque without damage to the valve. Bearings shall be designed for either vertical or horizontal installation.

2.14.1.5 All bonnets shall be bolted type. Valves shall be leakproof in any orientation of the stem.

2.14.1.6 Valves shall have TFE packing. O-ring shaft seals are not acceptable.

2.14.2 End Connections

2.14.2.1 The valves lugged wafer mounting holes shall be in accordance with ANSI B16.5.

2.14.3 Valve Actuators

2.14.3.1 General

2.14.3.1.1 Valve actuators shall be sized to handle the maximum differential pressure.

2.14.3.1.2 In the opening direction, the actuator shall engage a stop which has sufficient area to absorb the maximum force of the actuator.

2.14.3.2 Spring and Diaphragm Actuators

2.14.3.2.1 Spring and diaphragm shall be fully enclosed. Springs shall be corrosion resistant to atmospheric conditions.

2.14.4 Accessories

2.14.4.1 General

2.14.4.1.1 All pneumatic piping shall be with 1/4 inch stainless steel tubing with stainless steel compression type fittings of the double ferrule type. Tubing material shall be Material Class "ZJ" in accordance with Specification Section 17703, Instrument Piping Materials.

2.14.4.2 Filter-Regulators

2.14.4.2.1 Filter-regulator airsets shall be supplied, mounted, and piped.

2.14.4.2.2 All filter-regulator airsets shall be piped in accordance with Paragraph 2.14.4.1.1.

9 2 1 2 4 1 3 0 6 6 3

2.14.4.2.3 All filter-regulator airsets shall be equipped with an integral output air gauge of appropriate range unless a supply air gauge is provided on the valve.

2.14.4.2.4 All filter-regulator airsets shall be of all metal construction.

2.14.4.2.5 All filter-regulator airsets shall be provided with internal relief.

2.14.4.2.6 All filter-regulator airsets shall be sized to stroke the associated valve in a maximum of five seconds with 80 psig inlet pressure to regulator.

2.14.4.3 Solenoid Valves

2.14.4.3.1 Solenoid valves shall be mounted and piped to the control valve.

2.14.4.3.2 The solenoid valves shall be UL listed or FM approved 3-way switching valves, direct acting, and shall have an electrical rating of 120 Vac, 60 Hz. Solenoid valves shall be ported to provide, in the deenergized state, the valve failure action as shown below:

VALVE TAG NUMBER	SOLENOID TAG NUMBER	VALVE FAIL POSITION
YV-500-109	YY-500-109	Fail Open
PV-500-112	PY-500-112	Fail Closed
YV-500-210	YY-500-210	Fail Closed

2.14.4.3.3 Solenoid coils shall be molded type Class H insulation (as defined in UL 429) and designed for continuous operation at 105°F ambient air temperatures.

2.14.4.3.4 Solenoid coil enclosures shall be NEMA 4 (steel or aluminum construction) per NEMA 250.

2.14.4.3.5 Instrument port connections shall be 1/4 inch NPT.

2.14.4.3.6 All solenoids shall be piped in accordance with Paragraph 2.14.4.1.1 above.

2.14.4.3.7 Electrical conduit connection shall be 1/2 inch NPT.

2.14.4.3.8 All threaded connections shall be tapered and in accordance with ANSI B1.20.1.

9 2 1 2 4 1 3 0 6 6 4

2.14.4.3.9 Solenoid valves in on/off service shall be rated for an instrument air supply pressure of 150 psig maximum.

2.14.4.4 Limit Switches

2.14.4.4.1 Limit switches shall be mounted to the control valves and tagged as shown below:

VALVE TAG NUMBER	LIMIT SWITCH TAG NUMBER
YV-500-109	ZSL-500-109
YV-500-109	ZSH-500-109
PV-500-112	ZSL-500-112
PV-500-112	ZSH-500-112

2.14.4.4.2 The limit switches shall be a separate double pole, double throw switch for fully open and for fully closed positions. Contacts shall have electrical contact rating of 0.3 amp minimum at 120 Vac 60 Hz, non-inductive.

2.14.4.4.3 Limit switch enclosures shall be NEMA 4 (steel or aluminum construction) per NEMA 250. Valve limit switches field wiring connections shall be 1/2 inch conduit connection. Wiring shall terminate on screw type terminals.

2.14.4.4.4 All threaded connections shall be tapered and in accordance with ANSI B1.20.1.

2.14.4.4.5 ZSH and ZSL limit switches shall be marked such that the contact which is closed in valve position mid travel is marked "NC" and the common connection is marked "C."

2.14.4.5 Lubricators

2.14.4.5.1 Lubricators and isolating valves shall be furnished with all valves requiring stem lubrication.

2.14.4.5.2 One years supply of lubricant shall be furnished with each valve requiring lubrication.

9 2 1 2 4 1 3 0 6 6 5

2.15 MATERIALS AND EQUIPMENT - PRESSURE RELIEF VALVES

2.15.1 General Requirements

2.15.1.1 The following pressure relief valves shall be assembled, furnished, and installed:

TAG NUMBER	FLUID	TYPE	SET PRESSURE	SIZING BASIS	BODY SIZE
PSV-500-213	Water	Pressure Relief	100 psig	Thermal Expansion	3/4 in. MNPT x 1 in. FNPT
PSV-500-238	Water	Pressure Relief	150 psig	Blocked Discharge	3/4 in. MNPT x 1 in. FNPT
PSV-500-239	Water	Pressure Relief	150 psig	Blocked Discharge	3/4 in. MNPT x 1 in. FNPT

Note: Circulation relief valves PSV-500-238 and PSV-500-239 set pressure sized per NFPA 20, Paragraph 2-6.

2.15.1.2 All pressure relief valves shall meet the requirements of the ASME Boiler and Pressure Vessel Code, Section VIII.

2.15.1.3 The ASME Code Stamp is required on all relief valves. The valves shall be fabricated by a manufacturer who is in possession of a Code Symbol Stamp at the time of fabrication and has a valid Certificate of Authorization from the ASME Boiler and Pressure Vessel Committee.

2.15.1.4 The Seller shall size the relief valves for the service conditions given to verify suitable valve performance over the range of flows and pressures given. This information is to be submitted to the Buyer.

2.15.1.5 When two or more components of the same specifications are required, the components shall be identical (same manufacturer and catalog number).

2.15.1.6 The material of construction for a component part shall conform to the ASTM specifications as indicated below:

Carbon Steel (CS) Castings-ASTM A216/A216M, GR WCB
Forgings-ASTM A105/A105M

Stainless Steel (SS) Castings-ASTM A351/A351M, GR CF8M
Forgings-ASTM A182/A182M, GR F316 or GR F304

2.16 OPERATING AND DESIGN CONDITIONS - PRESSURE RELIEF VALVES

2.16.1 Blocked discharge relief valves shall be spring-loaded, high-capacity type with top-guided disc.

2.16.2 All pressure relief valve bodies and body joints shall meet the pressure and temperature ratings for the specified inlet and outlet flange sizes, in accordance with API Standard 526, Tables 1 through 14.

2.16.3 All flanged connections shall be in accordance with ANSI B16.5.

2.16.4 All threaded connections shall be in accordance with ANSI B1.20.1.

2.16.5 Center-to-center dimensions shall be in accordance with API Standard 526.

2.16.6 Valves shall be of closed bonnet construction.

2.16.7 Body (and bonnet) material shall be in accordance with API Standard 526. Bonnet shall be of the same material as the body.

2.16.8 Springs shall be made from materials meeting temperature ratings in accordance with API Standard 526.

2.16.9 Nozzle and disc material shall be of Type 304 or 316 stainless steel.

2.16.10 Items containing asbestos shall not be used.

2.16.11 Pressure relief valves shall meet requirements for seat leakage in accordance with API Standard 527.

9 2 1 2 4 1 3 0 6 5 7

2.17 **MATERIALS AND EQUIPMENT - TEMPERATURE SWITCHES, FILLED SYSTEM TYPE**

2.17.1 General Requirements

2.17.1.1 The following temperature switches shall be assembled, furnished, and installed:

TAG NUMBER	TRIP POINT(S)	FLUID	CONTACTS	CONNECTION RATING AND TYPE
TSHL-500-203	Sw.1 @ 45°F; Sw.2 @ 50°F	-	2 SPDT	½ in. Male NPT
TSH-500-208	80°F	-	2 SPDT	½ in. Male NPT
TSLL-500-227	40°F	-	2 SPDT	½ in. Male NPT
TW-500-203	-	Water	-	300 lbs, 1½ in. R.F. Flange
TW-500-208	-	Water	-	150 lbs, 1½ in. R.F. Flange
TW-500-227	-	Water	-	300 lbs, 1½ in. R.F. Flange

Note: TSHL-500-203 shall have independently adjustable trip points on each switch.

2.17.1.2 All switches shall be set to the actuation point specified prior to installation.

2.17.1.3 All switches shall have field setpoint adjustment capability over the full range of the switch. Temperature switch tag number TSHL-500-203 shall be a United Electric Model No. C402-9295 or equal. Temperature switches tag numbers TSH-500-20B and TSLL-500-227 shall be a United Electric Model No. B105-9410 or equal.

2.17.1.4 When two or more components of the same specifications are required, the components shall be identical (same manufacturer and catalog number).

2.18 **OPERATING AND DESIGN CONDITIONS - TEMPERATURE SWITCHES, FILLED TYPE**

2.18.1 Temperature switches shall be of the non-indicating type, vapor or liquid filled sensing element, furnished complete with thermowell and switch.

2.18.2 Switch housings shall be designed for NEMA 4 in accordance with NEMA 250.

2.18.3 Switch shall be snap-acting microswitch type rated 5 amperes (minimum) at 120 Vac, noninductive.

2.18.4 Setpoint repeatability shall be within ±1 percent throughout entire setpoint range.

2.18.5 Setpoint differential shall be fixed and shall not be more than 3 percent of the switch setting.

2.18.6 Switches subject to inadvertent operation (e.g., mercury wetted) due to shake or low level vibration shall not be used.

2.18.7 Thermowells shall be 304 stainless steel.

2.18.8 Threaded connections shall be in accordance with ANSI B1.20.1.

2.19 **MATERIALS AND EQUIPMENT - PRESSURE SWITCHES**

2.19.1 General Requirements

2.19.1.1 The following pressure switches shall be assembled, furnished, and installed:

TAG NUMBER	FLUID	RANGE	TRIP POINT	SWITCH
PSL-500-111	Water	20 - 200 psig	90 psig	2 SPDT
PSL-500-112	Water	20 - 200 psig	95 psig	2 SPDT
PSL-500-230	Water	20 - 200 psig	90 psig	2 SPDT
PSL-500-231	Water	20 - 200 psig	85 psig	2 SPDT
PSL-500-232	Water	20 - 200 psig	85 psig	2 SPDT

2.19.1.2 When two or more components of the same specifications are required, the components shall be identical (same manufacturer and catalog number).

2.19.1.3 The pressure switches shall be United Electric 115-Series or equal.

2.20 **OPERATING AND DESIGN CONDITIONS - PRESSURE SWITCHES**

2.20.1 Switch housings shall be designed for NEMA 4 in accordance with NEMA 250.

2.20.2 Process connection shall be 1/2 FNPT and electrical conduit connection shall be 3/4 inch FNPT hub.

9212413069

2.20.3 Setpoint shall be adjustable by means of an internal screw.

2.20.3.1 All switches shall be set to the actuation point prior to installation.

2.20.3.2 All switches shall have field setpoint adjustment capability over the full range of the switch.

2.20.4 Switch shall be snap acting type rated 5 amperes minimum at 120 Vac, noninductive.

2.20.5 Setpoint repeatability shall be within ±1 percent of full scale throughout entire setpoint range.

2.20.6 Setpoint differential (dead band) shall be fixed and shall not be more than 3 percent of the switch setting.

2.20.7 Proof pressure shall be at least 150 percent of the switch range.

2.20.8 Threaded connections shall be in accordance with ANSI B1.20.1

2.21 **MATERIALS AND EQUIPMENT - FLOW SWITCHES**

2.21.1 General Requirements

2.21.1.1 The following flow switch including the appropriate accessories shall be assembled, furnished, and installed:

TAG NUMBER	FLUID	TRIP POINT	CONNECTION TYPE
FSL-500-236	Water	5 gpm	2 inch NPT (male)

2.21.1.2 The flow switch shall be of the swing vane type and designed for pipe mounting. The swing vane length shall be sized to be installed in a Class 3000 socketweld tee per ASTM A105/A105M.

2.21.1.3 The flow switch shall be factory tested in accordance with manufacturer's standards and procedures. After completing the factory test, the flow switch shall be set as specified. The flow switch shall be a Ball Manufacturing Model D-3500S-S/S, 316 stainless steel, or equal.

2.22 **OPERATING AND DESIGN CONDITIONS - FLOW SWITCHES**

2.22.1 Housing shall be NEMA 4, per NEMA 250. Conduit connections shall be 1/2" FNPT.

2.22.2 Threaded connections shall be in accordance with ANSI B1.20.1.

2.22.3 The switch shall be double-pole, double-throw, rated 5 amperes, 120 Vac, 60 Hz, non-inductive load. Switches subject to inadvertent operation (e.g., mercury wetted) due to shake or low level vibration shall not be used.

2.22.4 Proof pressure shall be at least 150 percent of the maximum design pressure.

2.23 **MATERIALS AND EQUIPMENT - STEAM TRAPS AND DRAINERS**

2.23.1 General Requirements

2.23.1.1 The following steam traps shall be assembled, furnished, and installed:

TAG NUMBER	TRAP TYPE	NORMAL FLOW RATE	MAXIMUM FLOW RATE	PROCESS TEMPERATURE
XCV-420-113	Thermodynamic	65 lbs/hr	195 lbs/hr	396°F
XCV-420-114	Thermodynamic	65 lbs/hr	195 lbs/hr	396°F
XCV-420-115	Thermodynamic	65 lbs/hr	195 lbs/hr	396°F
XCV-420-116	Thermodynamic	65 lbs/hr	195 lbs/hr	396°F

2.23.1.2 Steam traps shall be of the thermodynamic type. The steam traps shall be a Yarway Series 721 or equal.

2.23.1.3 The steam trap shall have screwed connections conforming to the applicable provisions of ANSI B1.20.1.

2.23.1.4 Thermodynamic traps shall be disc type and can be installed in any position.

2.23.1.5 No asbestos or asbestos bearing material is acceptable.

2.23.1.6 When two or more components of the same specification are required, the components shall be identical (same manufacturer and catalog number).

2.24 **OPERATING AND DESIGN CONDITIONS - STEAM TRAPS AND DRAINERS**

2.24.1 Thermodynamic traps shall be all stainless steel construction.

9 2 1 2 4 1 3 0 5 7 1

2.25 **MATERIALS AND EQUIPMENT - LOCAL CONTROL PANEL**

2.25.1 General Requirements

2.25.1.1 The following local control panel (panel tag number LP-500-007) shall be assembled, furnished, and installed:

CONTROL PANEL TAG NUMBER LP-500-007 INSTRUMENTS AND COMPONENTS

TAG NUMBER	DESCRIPTION
FAH-500-204	Flow Alarm
FIC-500-204	Recirc. Controller for Jockey Pump
FSH-500-204	Flow Switch (part of FIC-500-204; set at 4 gpm)
HS-500-207	Oil-Tight Switch
YC-500-207	Loop 207 Logic
TAH-500-208	Fire Water Tank Heater Temperature Alarm
HS-500-210	Oil-Tight Switch
YC-500-210	Loop 210 Logic
FI-500-217A	Fire Water Tank Make-Up Flow Indicator
TALL-500-227	Fire Water Tank Heater Temperature Alarm

2.25.1.2 The selection of all accessories, materials, and methods of fabrication not specifically covered by this specification, but which are necessary to complete the fabrication of the control panel, shall be the responsibility of the Seller.

2.25.1.3 The control panels, accessories, materials, and all referenced instrumentation shall operate under the conditions of Paragraph 1.6.

2.25.1.4 The control panel, complete with all internal relays, circuits and instruments, shall be qualified to perform after an earthquake through a test program, by analytical methods, by experience or a combination thereof in accordance with IEEE Standard 344. The seismic input for any tests shall be the same as that specified herein, except that the DBE response spectra shall be scaled upward by a factor of 1.4.

9 2 1 2 4 1 3 0 6 7 2

The seismic criteria used for the qualification of the supplied panel shall be determined to be more severe than that represented by Attachment A, HWVP OBE response spectra, and Attachment B, HWVP DBE response spectra. It is noted that in certain high frequency ranges, the OBE is a more severe event than the DBE response.

2.25.1.5 When two or more components of the same specifications are required, the components shall be identical (same manufacturer and catalog number).

2.25.1.6 Control panel tag number LP-500-007 function.

A. If the fire water tank temperature drops below the setpoint temperature (TSLL-500-227), an alarm indicator (TALL-500-227) shall light.

B. If the water from the firewater heater outlet rises above its setpoint temperature (TSH-500-208), an alarm indicator (TAH-500-208) shall light.

C. Normally, there is no flow in fire water supply line (FWX-10"-500-030-G) due to a lack of demand for fire water. The jockey pump (PX-500-004) recirculates water to the fire water tank and the control valve (FV-500-204) is open. A flow indicating controller (FIC-500-204) indicates/controls the flow of the water in the fire water pressurization line (FWX-2"-500-030-G). When there is a demand for fire water greater than the setpoint of flow switch FSH-500-204, an alarm indicator (FAH-500-204) shall light and the controller (FIC-500-204) shall modulate the control valve (FV-500-204) in order to control the pump flow and maintain sprinkler system pressurization.

D. The fire water tank make-up water is controlled by valve YV-500-210. The flow indicator (FI-500-217A) indicates the flow of water into the tank. If the level of water in the tank is low (LSL-500-209A) the make-up valve (YV-500-210) opens. When the water level reaches its upper level (LSH-500-209), the make-up valve (YV-500-210) closes.

E. The fire water heater pump is normally set in auto mode. If the temperature drops below the low setpoint temperature (TSHL-500-203) both the fire water pump (PX-500-003) and the fire water heater (HT-500-001) shall activate. When the temperature of the water reaches the high setpoint, TSHL-500-203 shall turn off both the pump and the heater. In the manual mode, the heater and the heater pump will be off or on at the same time. In any mode, if there is a blockage in the fire water pump, the lack of flow will be detected (FSL-500-236) and the pump and heater shall shut off.

9 2 1 2 4 1 3 0 6 7 3

2.26 OPERATING AND DESIGN CONDITIONS - LOCAL CONTROL PANEL

2.26.1 Panel Construction

2.26.1.1 The control panel shall be fabricated for NEMA 12 classification in accordance with Contract Drawing H-2-121660, Instrument Panel Layout, LP-500-007, NEMA ICS 6, NEMA 250, and the requirements listed below.

2.26.1.2 The floor mounted control panel shall be fabricated from 12 gauge steel plate, except surfaces with cut-outs for instrument mounting shall be 3/16 inch steel plate or reinforced with 3/16 inch steel plate. The control panel shall have provisions to be anchored with a minimum of six 1/2 inch diameter bolts. Sub-panels shall be 10 gauge steel. All seams shall be continuously welded and ground smooth. The panels shall have strong, rigid construction and where shown on the Contract Drawing H-2-121660, Instrument Panel Layout, LP-500-007, stiffener plates or bracing shall be added to prevent buckling of panel surfaces. Panel doors shall be supplied with gaskets, and attached to the panel by a continuously welded piano type hinge. A 3-point (as a minimum) latching mechanism, with key lock handle, shall be provided on the door.

2.26.1.3 All burrs produced around cut-outs or bolt hole drillings shall be removed and cut-outs for instruments shall be within the tolerances specified by their manufacturer.

2.26.2 Steel Preparation and Painting

2.26.2.1 The outside of the panel shall be painted semi-gloss green (Federal Color No. 24277) per FED-STD-595B.

2.26.2.2 The inside of the panel, as well as any supporting brackets, mounting plates, etc., shall be painted white (Federal Color No. 27880) per FED-STD-595B.

2.26.2.3 The reference to federal colors is for the determination of color and hue only. The panel paint is not required to use the same pigments of the formulation specified in the federal standard.

2.26.2.4 One quart of paint of each color shall be furnished and shipped with the panel to be used for field touch-up.

2.26.3 Electrical Specifications

2.26.3.1 All wiring material and installation shall comply with NFPA 70, Specification Section 16110 - Electrical Materials and Devices, and Specification Section 16100 - Electrical Installation.

9 2 1 2 4 1 3 0 6 7 4

2.26.3.2 Wiring shall be contained by means of metal or plastic raceway or conduit. Cord connections will not be permitted, except where they are part of the instrument's design.

2.26.3.3 Terminal blocks for instrument and control wiring shall be in accordance with Specification Section 16110 - Electrical Materials and Devices.

2.26.3.4 All incoming and outgoing wiring between panel mounted devices shall be terminated on numbered terminal strips. No more than two wires or one wire and one jumper shall be terminated on any terminal. No uninsulated or exposed conductors shall extend beyond the sides of the terminal strip or its insulated barriers.

2.26.3.5 The greater of 25 percent or two spare terminals shall be provided for each terminal strip, in addition, the number of spares provided shall be an even number.

2.26.3.6 The main 120 Vac power to the panel shall be divided into the required number of circuits. The hot side of each circuit shall have its own fused disconnect switch. The neutral side of each circuit shall be terminated on a neutral terminal. The power shall be divided into the following circuits as a minimum:

Annunciator
24 Vdc Power Supply
Convenience Duplex Outlet
Relay Logic
Lamp Test

2.26.3.7 In addition, the 24 Vdc power shall also be divided into circuits, one for each analog loop and one for any instruments operating on 24 Vdc (such as receiver switches). The 24 Vdc power circuits terminal blocks shall be the same type as for 120 Vac but shall be physically separate.

2.26.3.8 Each circuit, either 120 Vac or 24 Vdc, shall be provided with a laminated plastic nameplate adjacent to the terminal blocks giving circuit number, circuit description and fuse rating.

2.26.3.9 All ac power wiring shall be color coded as follows:

Hot side of line	-	Black
Neutral side of line	-	White
Ground	-	Green
Shield/Drain	-	Clear

9 2 1 2 4 1 3 0 6 7 5

2.26.3.10 All panel wiring shall be in accordance with National Electrical Code, NFPA 70, Article 725, Class 1 and Class 2. The wire/cable shall be No. 16 AWG stranded copper with MTW 600 volt insulation in accordance with UL 83.

2.26.3.11 The control panel shall have a copper ground bus furnished and bolted to the frame. The bus shall have screws to fasten a minimum of 8 ground wires (10 to 14 gauge). A similar, but separate insulated, instrument ground bus of the same size shall also be furnished and installed. Each bus shall have a 3/8 inch diameter hole at one end for field ground attachment.

2.26.3.12 All wires and cables within the panel shall be identified on both ends with tubular shrink-on sleeves. The sleeves shall be white with permanently imprinted black letters and numbers. The wire number shall be the same at both ends of the wire or cable. Daisy chained wires shall maintain the same wire number throughout their run.

2.26.3.13 The wire number shall be the originating instrument number and a sequential number depending on the number of wires connected to the instrument or the power circuit number.

2.26.3.14. A lamp test pushbutton switch shall be provided for the panel's indicating lights. It shall be wired to illuminate all panel indicating lights when depressed.

2.26.4 Equipment Mounting

2.26.4.1 Equipment shall be mounted so that adjustments are readily accessible and that replaceable components may be replaced without removing other equipment.

2.26.4.2 Terminals shall be located and/or insulated as required to minimize the shock hazard to personnel performing routine adjustments or maintenance.

2.26.4.3 Two spare fuses of each kind used in each panel shall be supplied in a clear, sealed, plastic bag marked "Spare Fuses." This bag shall be tie-wrapped to the interior of the panel.

2.26.5 Nameplates

2.26.5.1 Nameplates shall be made of 1/16 inch thick laminated plastic stock with white surface and black core. They shall have beveled edges without burrs. They shall be engraved with sans serif (Gothic) style characters in accordance with ISA RP60.6 and shall be fastened with corrosive resistant number 4-40 machine screws or 1/8 inch drive rivets.

9 2 1 2 4 1 3 0 6 7 6

2.26.5.2 All back-of-panel instruments shall have nameplates engraved with their tag numbers. They shall be 1 inch or less in height and shall have 1/8 inch high characters in accordance with ISA RP60.6.

2.26.5.3 Each front-of-panel instrument shall be identified on the back side of the panel by means of a nameplate engraved with its tag number. The nameplate shall be 1 inch or less in height and shall have 1/8 inch high characters in accordance with ISA RP60.6.

2.26.5.4 Panel equipment number and other front of panel nameplates shall be as shown on Contract Drawing H-2-121660, Instrument Panel Layout, LP-500-007.

2.26.6 Panel Instruments

2.26.6.1 General

2.26.6.1.1 Panel instruments shall be provided in accordance with Paragraph 2.25 and Contract Drawing H-2-121660, Instrument Panel Layout, LP-500-007.

2.26.6.1.2 The panel drawings show the mounting arrangement and locations for all front of panel instruments. The panel instruments shall be removable without disturbing any connections exterior to the panel.

2.26.6.1.3 An elapsed time indicator shall be provided and operated on 120 Vac, and shall continuously measure time when energized. The indicator shall not reset when de-energized. The indicator shall be mounted to the front panel.

2.26.6.2 Controllers

2.26.6.2.1 Controllers shall be three mode type (proportional, integral, derivative) with local auto-manual switch. The controller shall indicate process variable and setpoint and output as a percent (0-100% range). Setpoint shall be locally adjustable.

2.26.6.2.2 Electronic controllers shall have input and output of 4-20 mA dc and supply loop power. They shall operate from 120 Vac and be compatible with remotely located 4-20 mA dc electronic transmitters.

2.26.6.3 Receiver Switches

2.26.6.3.1 Electronic receiver switches shall be surface mounted or plug-in card. They shall accept an input of 4-20 mA dc and have DPDT switches rated at 5 amps minimum, non-inductive, for 120 Vac. The

9 2 1 2 4 1 3 0 6 7 7

surface mounted type shall operate on 120 Vac, the plug-in type shall operate on 24 Vdc.

2.26.6.4 Receiver Indicators

2.26.6.4.1 Receiver indicators shall be shall be flush mounted.

2.26.6.4.2 Analog indicators shall operate from a 4-20 mA dc input with no external power required.

2.26.6.5 Hand Switches

2.26.6.5.1 Hand switches shall be provided with snap acting contacts. The switch operation, nameplate engraving and colors shall also be as shown on Contract Drawing H-2-121660, Instrument Panel Layout, LP-500-007.

2.26.6.6 Indicators

2.26.6.6.1 Indicators shall be provided with nameplate engraving and colors as shown on Contract Drawing H-2-121660, Instrument Panel Layout, LP-500-007.

2.26.6.6.2 Panel lights shall have at least a 50,000 hour life. It is recommended that type number 757 28 volt lamps be operated at 24 volts for the panel indicator lamps which require the use of colored lenses.

2.27 **MATERIALS AND EQUIPMENT - LEVEL GAUGE, FLOAT AND TAPE TYPE**

2.27.1 General Requirements

2.27.1.1 The following level gauge shall be assembled, furnished, and installed:

TAG NUMBER	FLUID	TEMPERATURE RANGE	TANK TYPE
LI-500-202	Water	40°F to 80°F	Vented Cone Roof (TK-500-001)

2.27.1.2 The tank gauge shall be a float operated mechanical instrument designed to provide continuous liquid level measurement of liquid product stored in tank equipment number TK-500-001. The tank level gauge shall be a Varec 2500 Series.

2.27.1.3 Threaded connections shall comply with ANSI B1.20.1.

2.27.1.4 The tank gauge shall be accurate to ±1/16 inch of liquid level.

2.28 **OPERATING AND DESIGN CONDITIONS - LEVEL GAUGE, FLOAT AND TAPE TYPE**

2.28.1 The gauge shall be float-actuated and measure changes in liquid level as a function of float travel.

2.28.2 The gauge shall be suitable for installation on an atmospheric pressure fixed roof above ground tank. The gauge head shall be designed for mounting near grade level in order to allow convenient viewing.

2.28.3 The floats shall be of a circular design, with a diameter less than 18 inches, with a welded stainless steel shell filled with glass foam.

2.28.4 The gauge head shall provide a direct reading English (fractional) units dial counter for the display of liquid level of the tank product. The numerals shall be white numerals on a black background. The numeral graduation shall be to 1/16 inch.

2.28.5 The gauge head tape outlet connection to the piping shall be top-mounted 1-1/2 inch FNPT.

2.28.6 The gauge head shall be sealed such that the gauge head and counter compartments may be filled with oil.

2.28.7 The gauge head shall be provided with a means to check float operation.

2.28.8 The gauge head shall be provided with TFE bearings and stainless steel shafts.

2.28.9 The level gauge shall have a mechanical mechanism to provide constant tension on the float tape to automatically compensate for the variations in the weight of the tape at different liquid levels.

2.28.10 The level gauge shall be furnished with all required elbows, guide cable, anchors, fittings, and attachment brackets.

2.28.11 The level gauge tape material, guide material, anchor material, and pulley material shall be stainless steel.

2.29 **SHOP COATING**

Instruments shall be coated with manufacturer's standard shop coating. Stainless steel parts shall not be coated. Coating shall withstand the environmental conditions described in Paragraph 1.6.

9 2 1 2 4 1 3 0 6 7 9

2.30 **LABELING**

2.30.1 All instruments shall be provided with an 18 gauge (minimum) stainless steel tag bearing the instrument tag number and the service description (stamped or engraved).

2.30.2 The tag shall be affixed to the instrument using stainless steel wire where possible, otherwise the use of stainless steel screws or rivets is acceptable. This tag is in addition to any standard nameplate showing manufacturer, model number, range, etc.

2.31 **CLEANING**

All instruments shall be shipped in a thoroughly clean condition. No sand, oil, grit, grease (except where required for lubrication), weld spatter, or other foreign material shall be present. All openings shall be capped or otherwise sealed with a dust-tight enclosure.

2.32 **INSPECTION AND SHOP TESTING**

2.32.1 Instruments shall be inspected in accordance with the requirements of Paragraphs 2.1 through 2.28.

2.32.2 Instruments shall be tested and calibrated for the range and to the performance requirements of Paragraphs 2.1 through 2.28.

2.32.3 Inspection and Testing of the Local Control Panel, Tag No. LP-500-007.

2.32.3.1 The control panel shall be inspected and tested at the shop prior to shipment.

2.32.3.2 The Buyer shall be notified prior to the completion of the panel so that he can arrange for an inspection by his representative.

2.32.3.3 Prior to the arrival of the Buyer's representative, the panel shall have been completely tested and inspected.

2.32.3.4 All electrical circuits shall be checked for continuity and operability.

2.32.3.5 All symbols and nameplates checked for correct spelling and size of letters.

2.32.3.6 All light bulbs shall have been tested.

2.32.3.7 Mechanical features, such as doors, hinges, and latches shall be free from defects.

9 2 1 2 4 1 3 0 6 8 0

2.32.3.8 The finish shall be free from defects.

2.32.3.9 The Seller shall perform all tests required to place the panels in operating condition.

2.32.3.10 The Seller shall submit a comprehensive inspection/test procedure to the Buyer for approval. The procedure shall include a functional test at inputs and outputs at 0, 25, 50, 75 and 100 percent of span.

2.32.3.11 The Seller shall have the responsibility to allocate adequate time, space, facilities, and assistance to permit inspection and testing to the satisfaction of the Buyer's representative. The Seller shall provide technicians and materials as required to make whatever measurements and connections the Buyer's representative deems necessary to assure that all functions and accuracies are according to specifications. Test instruments and equipment, test leads, temporary wiring, tools, etc., shall be made available, by the Seller, as required to permit 100 percent inspection and testing of the panel. All the above items are to remain the property of the Seller.

2.32.3.12 The Seller shall submit an Inspection/Test Report verifying that the requirements of Paragraph 2.32 have been met.

2.33 **PACKAGING**

Instruments shall be packed and/or protected by the manufacturer's standard packing materials to ensure safe shipment and subsequent storage at the jobsite prior to actual installation. Packages shall be labeled sufficiently to prevent damage during shipping and storage. Each package shall be individually identified with the following information:

Seller's Name
Project Identification and Destination
Purchase Order Number
Specification Number
Manufacturer's Name, Model, and Serial Number
Description of Instrument
Tag Number

Other detached component(s) which might be packed separately shall be provided with manufacturer's standard identification tag, with the main instrument tag number securely attached to the component(s) using stainless steel wire.

2.33.1 The panel shall have the instruments removed prior to panel shipment; the instruments which are removed shall be packaged individually and marked with the panel tag number as well as the

information in Paragraph 2.33. The panel shall be packaged and/or protected by materials to ensure safe shipment and subsequent storage at the jobsite prior to installation.

2.34 **APPROVALS**

All electrical and electronic instruments or control devices or components which operate at voltages higher than 30 volts shall be UL listed devices, UL recognized components, or FM approved devices (refer to FM and UL directories).

PART 3 EXECUTION

3.1 **INSTALLATION, APPLICATION AND ERECTION**

3.1.1 Installation

The Seller shall install the instruments in accordance with the procedure and requirements detailed in Specification Section 17704, General Instrumentation Installation and Testing, and the manufacturer's instructions.

3.2 **FIELD QUALITY CONTROL**

A field inspection shall be performed to verify that the installation meets the requirements of Paragraph 2.32. After installation inspection has been completed, necessary testing shall be performed on the installed instruments in accordance with Specification Section 17705, Instrument Calibration and Checkout.

END OF SECTION

THIS PAGE INTENTIONALLY
LEFT BLANK

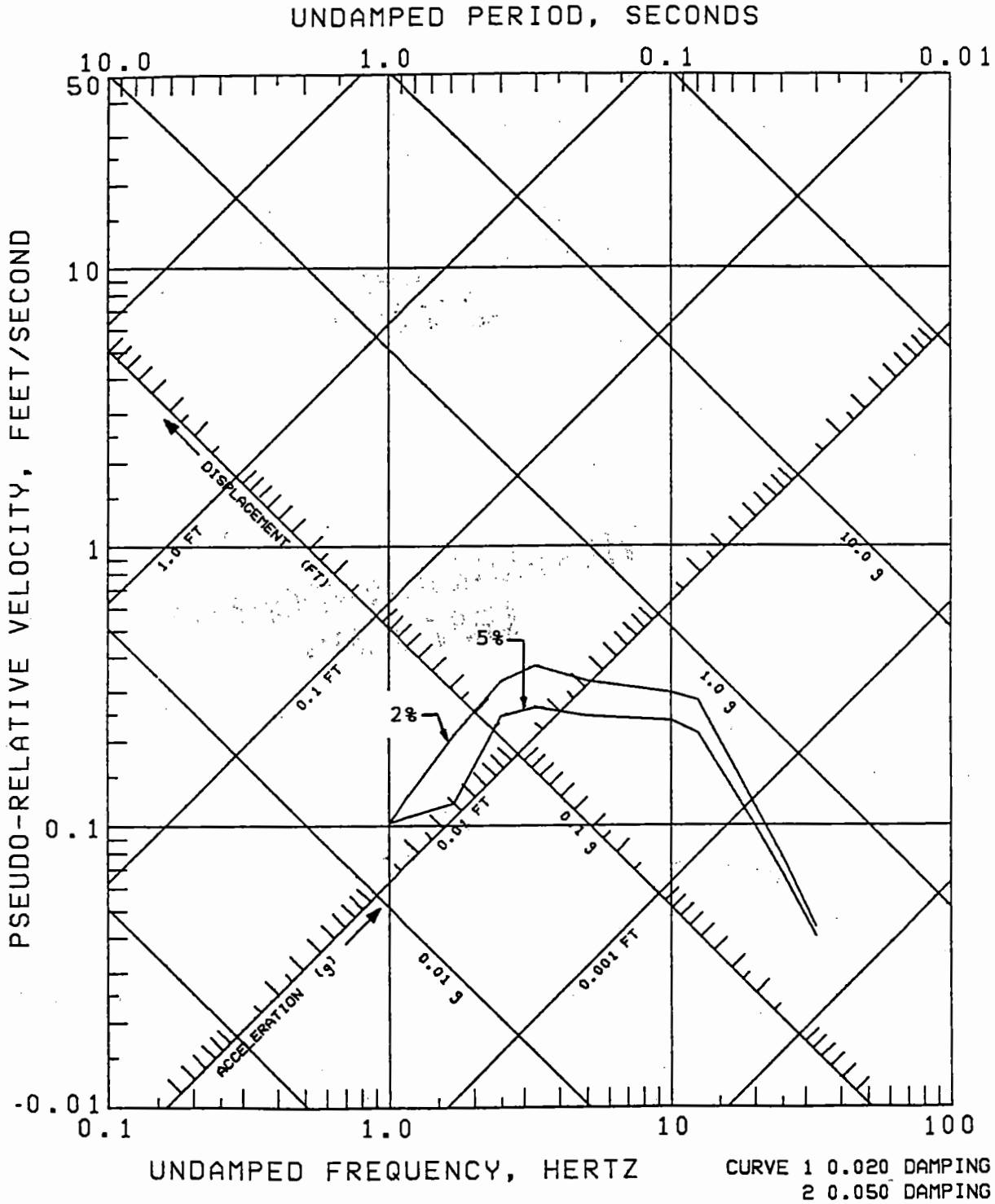

ATTACHMENT A

HWVP OBE RESPONSE SPECTRA

9 2 1 2 4 1 3 0 6 8 3

THIS PAGE INTENTIONALLY
LEFT BLANK

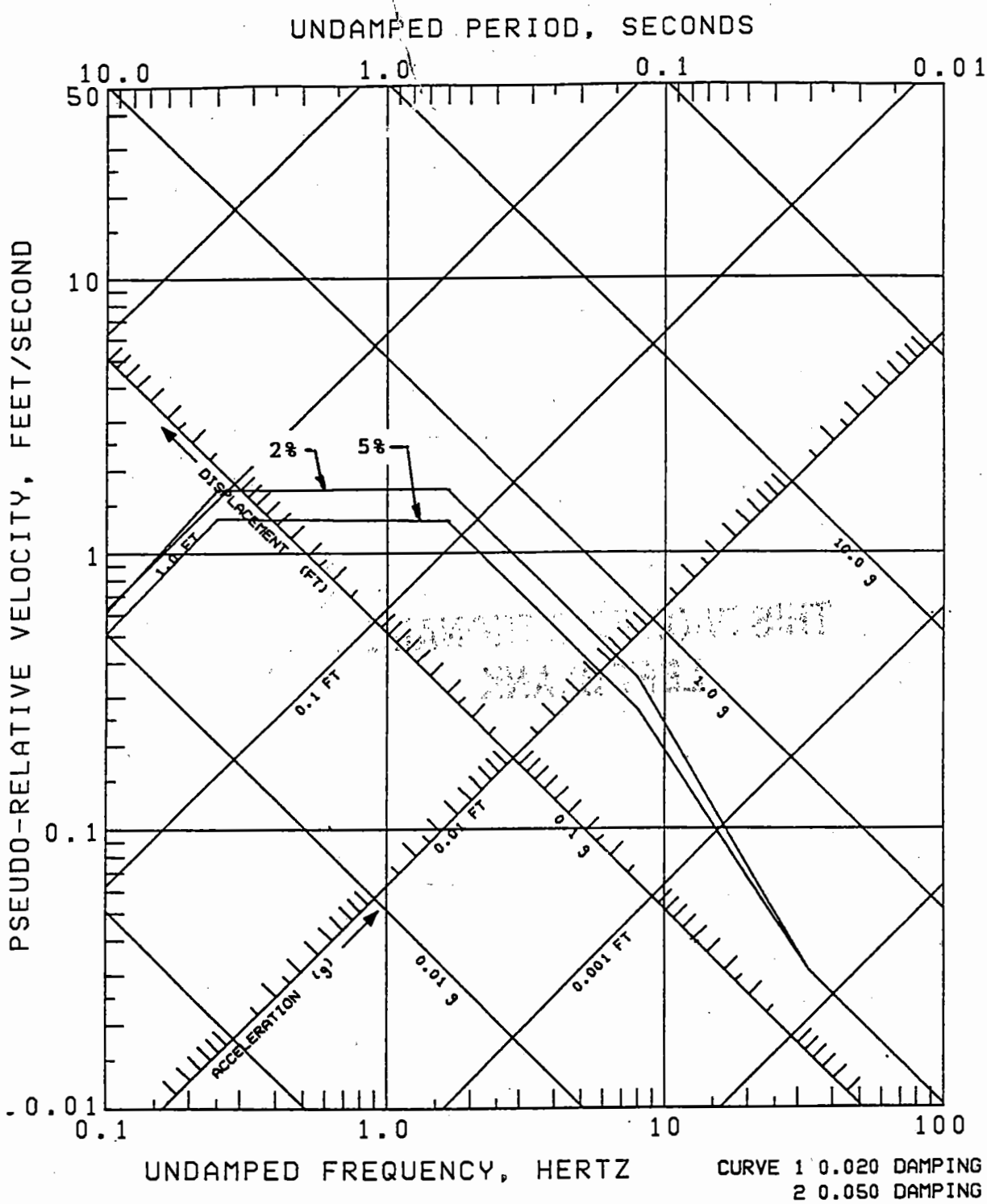

ATTACHMENT B

HWVP DBE RESPONSE SPECTRA

9212413068 4

THIS PAGE INTENTIONALLY
LEFT BLANK