Office of River Protection, State of Washington Department of Ecology
Tank Waste Retrieval Work Plan/Functions and Requirements Change Notice
(Per Hanford Federal Facility Agreement and Consent Order Section 9.3)

1. Document Title and Number: 241-AX-102 Tanks Waste Retrieval Work Plan, RPP-RPT-58933, Revision 1		
2. Minor Field Change: (Section 12.4 HFFACO Action Plan) ☐ Yes: (WRPS Signature Only – Attach signed form to Primary Document for record purposes) x No: Proceed to Box 3	**3.** Document Issue Date: 8/24/17 **4.** Document Modification Notice Date: 3/21/19	**5.** Notice Number: 2019-01
6. Do proposed changes require schedule changes? (Would this extend completion of retrieval beyond 12 months from date of initiation?) Yes x No	**7.** Do proposed changes include specific additions, deletions, or modification to scope and/or requirements which affect the overall intent of the plan? ☐ Yes x No	**8.** (Check only one box) ☐ Significant Modification (Check if the answer to question in <u>either</u> section 6 or 7 is "yes". Significant modifications require revision of the primary document.) Minor Modification x Requires modification of the document x Can be accomplished with Modification Notice.

9. Description and Justification of Change:

The TWRWP is being changed to align the work plan with both the field-deployed system and planned operational changes that have been implemented since the document was issued. Approved Tank Waste Retrieval Work Plan/Function Requirements Change Notices are incorporated through periodic revisions to the work plans.

Change Description:

See the redline strikeout pages attached to this notice. Please note that the page numbers are tentative because the redline markup includes both struck information and the modifications.

Justifications:

- Pages i, viii, 1-1, 2-1, 3-20, 3-21, 5-1, and 8-1: Changed DOE or ORP to DOE-ORP for consistency and/or updated Consent Decree Reference.
- Pages 2-1 and 2-3: Added additional schedule details and a simplified schedule.
- Pages 2-4, 2-5, 2-7, and 2-8: Updated figure numbers. The simplified schedule was added as a figure changing the figure numbering sequence.
- Page 2-5: Corrected two word auto correction errors.
- Page 3-15: Added a paragraph requested by Ecology.
- Pages 3-16, 3-27, 3-28, 3-29, and 3-30: Changed to show two sluicers rather than three.
- Pages 3-35 and 3-36: Section 3.10 was completely revised to describe the air monitoring program that has been deployed since the work plan was originally issued.
- Pages 4-1 and 4-3: Corrected typographical errors.
- Pages 4-6 and 4-7: Provide information about using a new gamma logging tool.

10. Impact of Change:

The original design included three extended reach sluicers. The shield plug could not be removed in one of the pits to make room for the third sluicer. The figure shown below shows the approximate coverage expected from the sluicers. Sluicers have been inserted in the R-001A and R-001C locations. The hashed areas show the area that the nozzles could reach within 6 inches. The dashed lines show the reach of the sluicers horizontal to the bottom of the tank. Spray will reach all parts of the tank. The impact of having two sluicers rather than three is a loss of retrieval efficiency and redundancy.

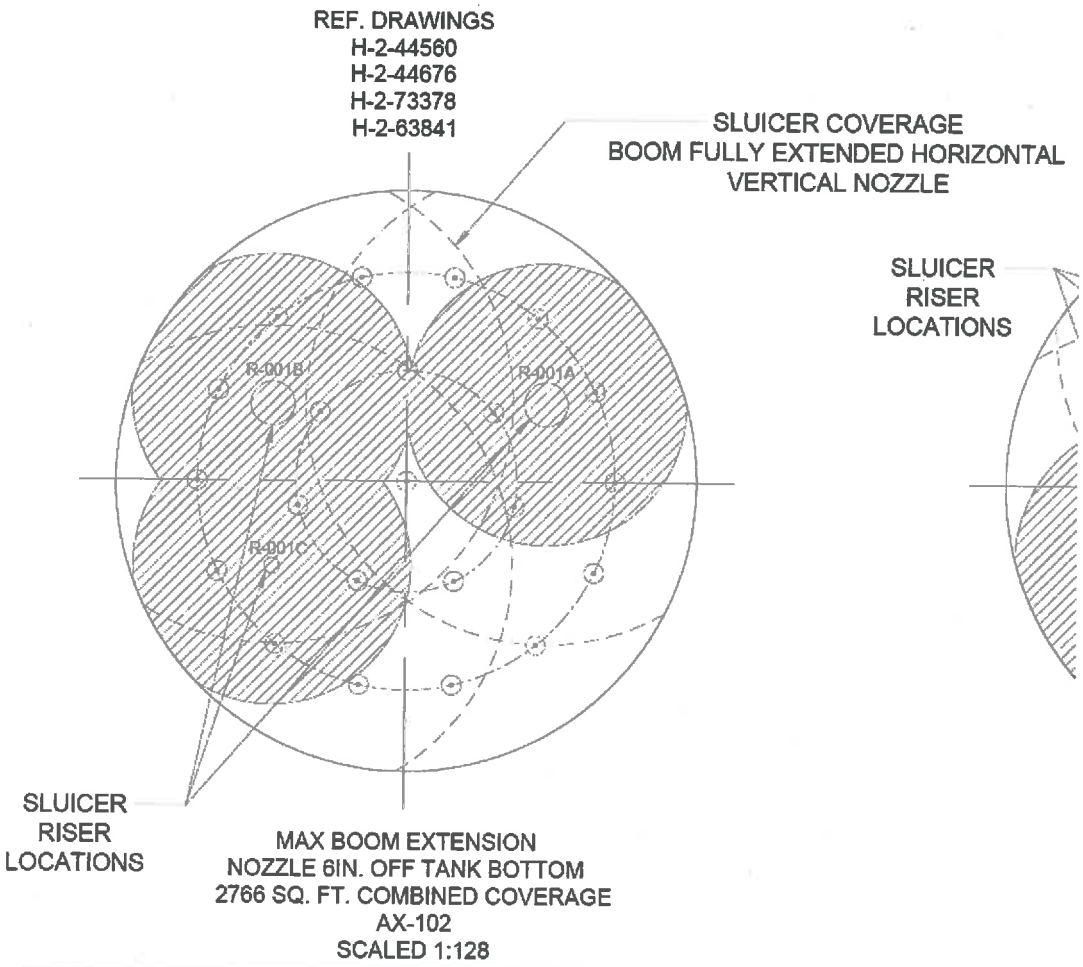

Office of River Protection, State of Washington Department of Ecology
Tank Waste Retrieval Work Plan/Functions and Requirements Change Notice
(Per Hanford Federal Facility Agreement and Consent Order Section 9.3)

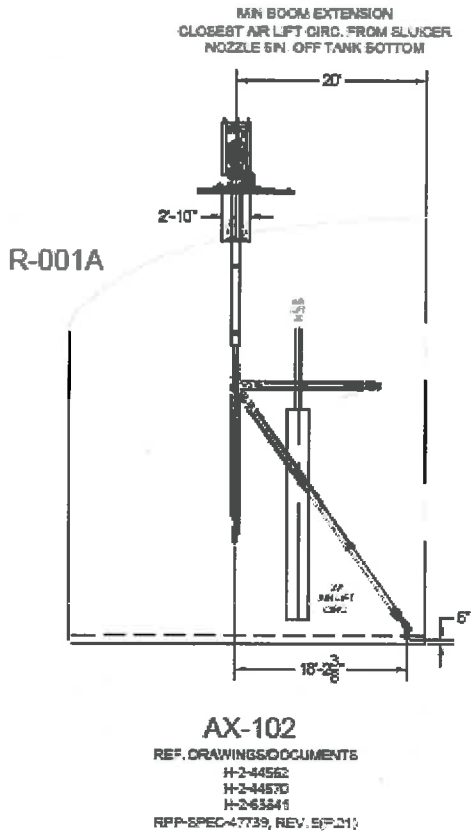

11. Additional Requirements and/or Provisions

Approvals

Washington River Protection Solutions, LLC.	Office of River Protection	State of Wash., Dept. of Ecology
☐ Provisional Approval[2] Date	☐ Provisional Approval[2] Date	☐ Provisional Approval[2] Date
☒ Final Approval Date 7/25/19	☒ Final Approval Date 7/25/19	☒ Final Approval Date 7/25/19

Notes

1 - For use by Ecology to identify any additional information needed to make a decision regarding the request for modifications. In addition, Ecology will identify actions, if any, regarding the modification request that DOE may take pending Ecology's final decision

2 – Provisional approval allows DOE and it's contractors to take specific actions identified in section 11, prior to final approval of this modification.

Tank Waste Retrieval Work Plan Format

Tank Waste Retrieval Work Plans (TWRWP) are documents that are required by both the Hanford Federal Facility Agreement and Consent Order, EPA Docket Number 1089-03-04-120; Ecology Docket Number 89-54, (HFFACO Attachment 2, Action Plan Appendix I) and Appendix C of the Consent Decree in *State of Washington v. Dept. of Energy*, Case No. 2:08-CV-05085-FVS (E.D. WA October 25, 2010).[1] The TWRWP content required in both the HFFACO and the Consent Decree is nearly identical and is delineated in outline form with section titles such as the following:

> Operational requirements during retrieval; and
>
> Functions and associated requirements necessary to support design of proposed waste retrieval and leak detection monitoring and mitigation system(s);

Prior to the creation and execution of the Consent Decree in 2010, the Departments of Energy and Ecology had cooperatively developed and employed a format for TWRWPs created under the HFFACO. Once the Consent Decree and its requirement for TWRWPs came into effect, Ecology and DOE-ORP simply decided to continue to use the TWRWP format developed under the HFFACO in satisfaction of the Consent Decree TWRWP requirement, thus avoiding, among other things, a potentially lengthy development period for a document that already existed and that both parties were already accustomed to and satisfied with.

The following pages provide a crosswalk to point to the sections in the TWRWP where the required elements of the Consent Decree, Appendix C, Parts 1 and 2, may be located.

[1] This Consent Decree was subsequently modified by the Amended Consent Decree (March 11, 2016), ~~and~~ the Second Amended Consent Decree (April 12, 2016), and the Third Amended Consent Decree (October 12, 2018).

Consent Decree Appendix C				TWRWP	
*Page	Part	Line Number	Requirement	Location by Section Number	Supplemental notes, if necessary
		21	General arrangement diagrams	3.5, *Waste Retrieval System Diagram*	
		22	System description	3.1.1, *Physical Description*	
		1-2	Piping and instrumentation drawings (P&ID) for the retrieval system	3.8, *Information for New Aboveground Tank Systems*	Not required. P&ID drawings are included with the IQRPE package.
		3	Process flow diagrams	3.8, *Information for New Aboveground Tank Systems*	Not required. Process flow diagrams are included with the IQRPE package.
		4-5	Information to demonstrate compliance with WAC 173-303-640	3.8, *Information for New Aboveground Tank Systems*	Not required. Compliance information is included with the IQRPE package.
		6-7	Describe the disposition of the system at completion of the retrieval.	3.7, *Anticipated Impacts of Tank Waste Retrieval on Future Pipeline/Ancillary Equipment Retrieval* 3.9, *Disposition of Waste Retrieval System Following Waste Retrieval*	

*Neither the Amended Consent Decree (March 11, 2016) ~~nor~~ the Second Amended Consent Decree (April 12, 2016) nor the Third Amended Consent Decree changed the text of Appendix C, as the Consent Decree was entered by the Court on October 25, 2010. This table refers to the page numbers and text as set forth in Appendix C as entered October 25, 2010.

1.0 INTRODUCTION

The U.S. Department of Energy, Office of River Protection (DOE-ORP) River Protection Project mission includes storage, retrieval, immobilization, and disposal of radioactive mixed waste presently stored in underground tanks located in the 200 East and 200 West Areas of the U.S. Department of Energy (DOE) Hanford Site. Single-shell tank 241-AX-102 (AX-102) located in the 200 East Area (Figure 1-1), is scheduled for waste retrieval using a modified sluicing system retrieval technology. Tank AX-102 is classified as "sound" as specified in HNF-EP-0182, Rev. 328, *Waste Tank Summary Report for Month Ending April 30, 2015*.

As of October 25, 2010, the Consent Decree in *State of Washington v. Department of Energy,* Case No. CV-08-5085-FVS[2] has provided the regulating direction for Tank Waste Retrieval Work Plans (TWRWP) for tanks that are required to be retrieved under the Consent Decree. The purpose of this TWRWP is to provide the State of Washington, Department of Ecology (Ecology) information on the planned approach for retrieving waste from AX-102 to allow Ecology to approve the waste retrieval action.

Where information regarding treatment, management, and disposal of the radioactive source, byproduct material, and/or special nuclear components of mixed waste (as defined by the *Atomic Energy Act of 1954*) has been incorporated into this TWRWP, it is not incorporated for the purpose of regulating the radiation hazards of such components under the authority of this tank waste retrieval work plan or *Revised Code of Washington,* Chapter 70.105 RCW, "Hazardous waste management."

[2] The "Consent Decree" collectively refers to the Consent Decree in Case No. 2:08-cv-05085-FVS (October 25, 2010), the Amended Consent Decree, Case No. 2:08-cv-05085-RMP (March 11, 2016), ~~and~~ the Second Amended Consent Decree, Case No. 2:08-cv-05085-RMP (April 12, 2016) and the Third Amended Consent Decree, Case No. 2.08-cv-05085-RMP (October 12, 2018). The TWRWP requirements of the October 25, 2010 Consent Decree were not modified by either the Amended Consent Decree or the Second Amended Consent Decree.

2.0 TANKS AND/OR ANCILLARY EQUIPMENT CONDITION AND CONFIGURATION AND WASTE CHARACTERISTICS

2.1 TANK

Tank(s) *and/or ancillary equipment condition and configuration*

Tank 241-AX-102 is the subject of this TWRWP.

2.1.1 Start Date

Submittal of the TWRWP shall be accompanied by a schedule provided for informational purposes only

The planned sequence of retrievals in AX Farm is AX-~~104~~102, AX-~~102~~104, AX-103, and AX-101. DOE-ORP anticipates that ~~retrieval systems will be installed in pairs so there should be operational flexibility to retrieve from either of two tanks at any one time. DOE expects to install retrieval systems for AX-101 and AX-103 while AX-104 and AX-102 are being retrieved. AX-104 retrieval is expected to start no earlier than the summer of 2019. AX-101 and AX-103 retrieval will start after AX-104 and AX-102 are completed. The duration of retrievals will be impacted by operational constraints associated with vapor protection for workers. As of June 2017, the start date for AX-102 retrieval can only be projected as after calendar year 2019~~AX-102 retrieval system installation is planned to be complete at the end of June 2019, followed by a month of testing, and then operations. Retrieval operations are planned to start as early as July 2019. Figure 2-1 shows the AX Farm retrieval schedule as of 3/19/19. All of the dates are approximate and are based on information, assumptions, forecast available on the noted date. Schedule changes are frequent and this document will not be modified for the sole purpose of providing an updated schedule.

2.1.2 History of Tank

Tank(s) and/or ***ancillary equipment condition and configuration***

Summary-level historical data related to the configuration and operating history for tank AX-102 is provided in Table 2-1.

Table 2-1. Summary-Level Data for Tank AX-102.

Constructed	1963-64
In service	1966
Diameter (ft)	75
Operating depth (in.)	360
Design capacity (gal.)	≈1,000,000
Bottom shape	Flat
Ventilation	Active*
Nominal burial depth (ft)	6

Figure 2-1. AX Tank ~~Composite~~Retrieval Schedule as of 4/18/19

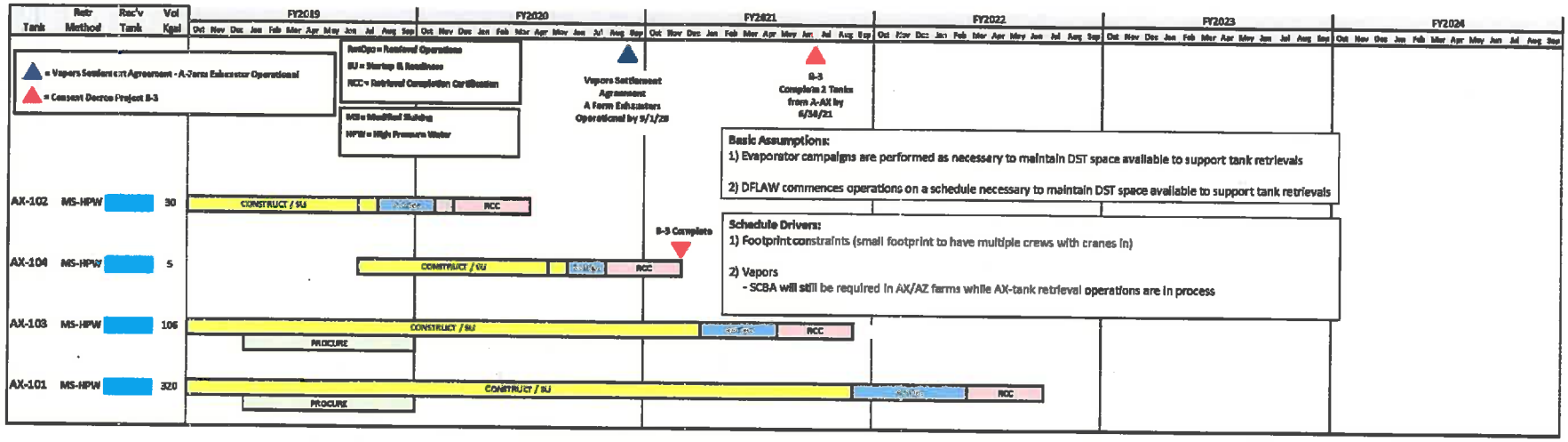

Figure 2-12. AX Tank Composite

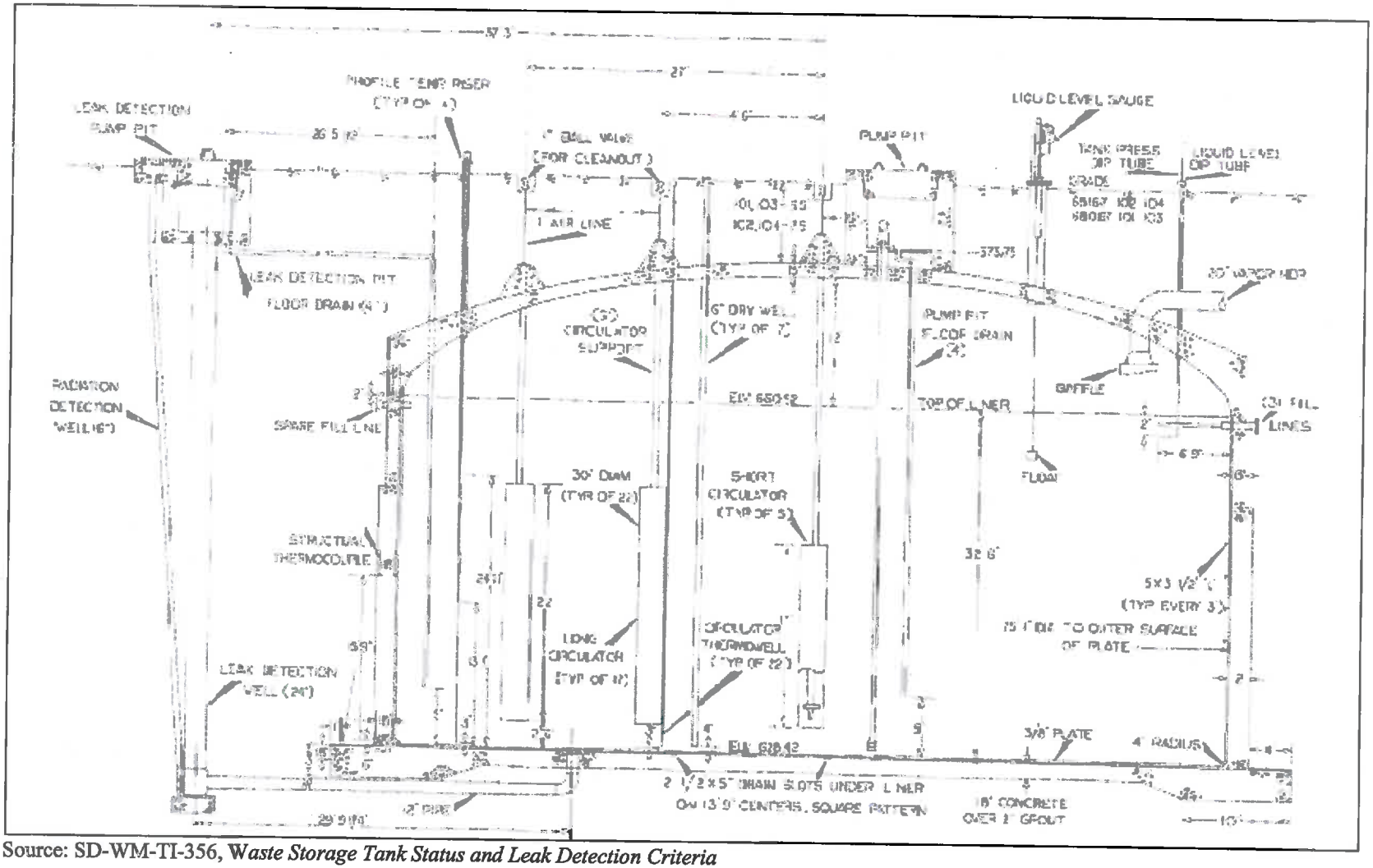

Source: SD-WM-TI-356, *Waste Storage Tank Status and Leak Detection Criteria*

Each tank was originally equipped with 54 risers that penetrated the tank dome and 22 airlift circulators that were ~~operators~~ operated to suspend solids, mix the tank contents, and dissipate heat. The airlift circulators positions are shown in Figure 2-2. The airlift circulators are welded to the bottom of risers and end about 2.5-ft from the bottom of the tank. The airlift circulator draft tubes are in two lengths; 17 and 22-ft.

Figure 2-~~2~~3. Tank AX-102 Airlift Circulator Position.*

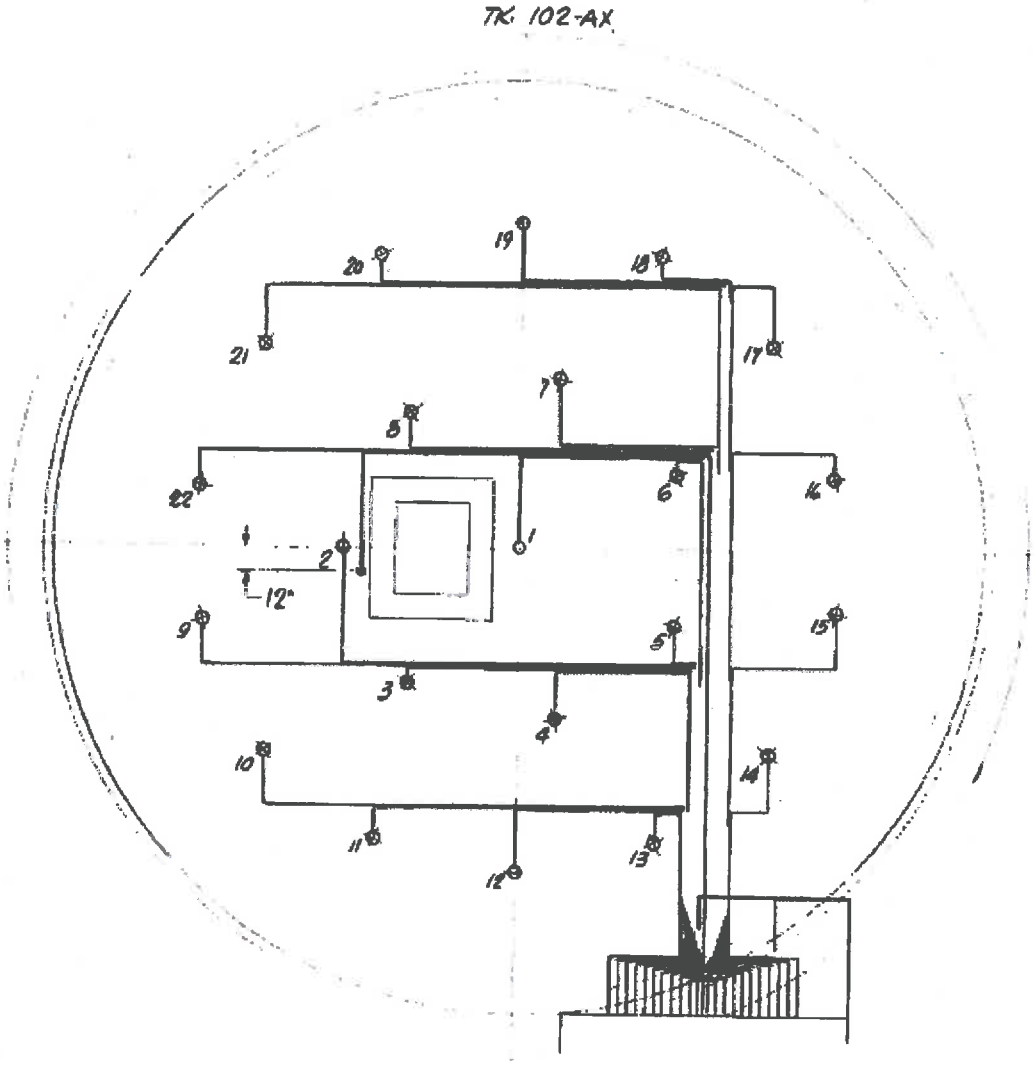

* From drawing H-2-44676, *Air Lift Circulator*

The 241-AX tanks were originally designed to contain liquid and solid wastes at a maximum temperature of 350°F (RPP-10435, *Single-Shell Tank Integrity Assessment Report*, page A-43).

The tank design includes a leak detection pit. A system of drain channels in the concrete base slab immediately below the carbon steel liner direct any leaked material to drain collection point. A 12 in. carbon steel pipe connects the drain network with a leak detection well. The sixty-foot deep well consists of a 24 in., schedule 20 carbon steel pipe, ~~surmounted~~ surrounded by a

Table 2-2. Tank AX-102 Riser Configuration[a] (2 Sheets)

Component Identification Number	Diameter (in.)	Use Descriptions and Comments
		Tank AX-102
13A	4	Temperature Probe, Weather Covered
13B	4	Temperature Probe
13C	4	Temperature Probe, Weather Covered
14	42	Steam Coil
15	4	Future Condensate-Below Grade

[a] Best-basis inventory documents from TWINS, Web Site - http://twinsweb.pnl.gov/twins.htm and H-14-010609
[b] Enraf is the supplier of the identified level gauges; ENRAF is a trademark of Enraf, Inc., Enraf B.V., Delft, The Netherlands.

Figure 2-34. Tank AX-102 Riser and Fill/Cascade Line Plan View.

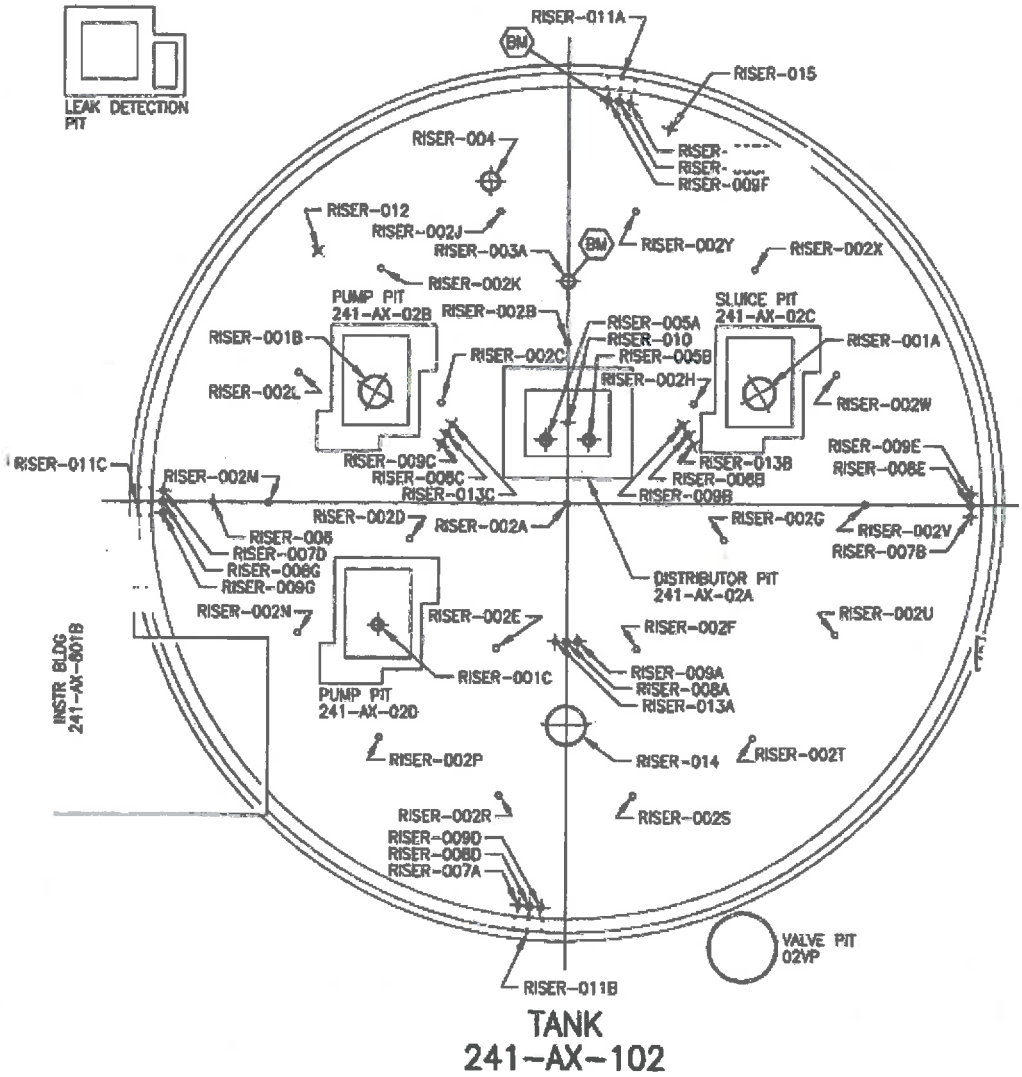

2.1.3 Tank Classification and Level History

Tank(s) and/or ancillary equipment ***condition*** *and configuration*

Tank AX-102 is classified as sound in HNF-EP-0182. Figure 2-4 shows the waste level history in the tank and some information on the waste stored in the tank.

Figure 2-45. Tank AX-102 Surface Level History

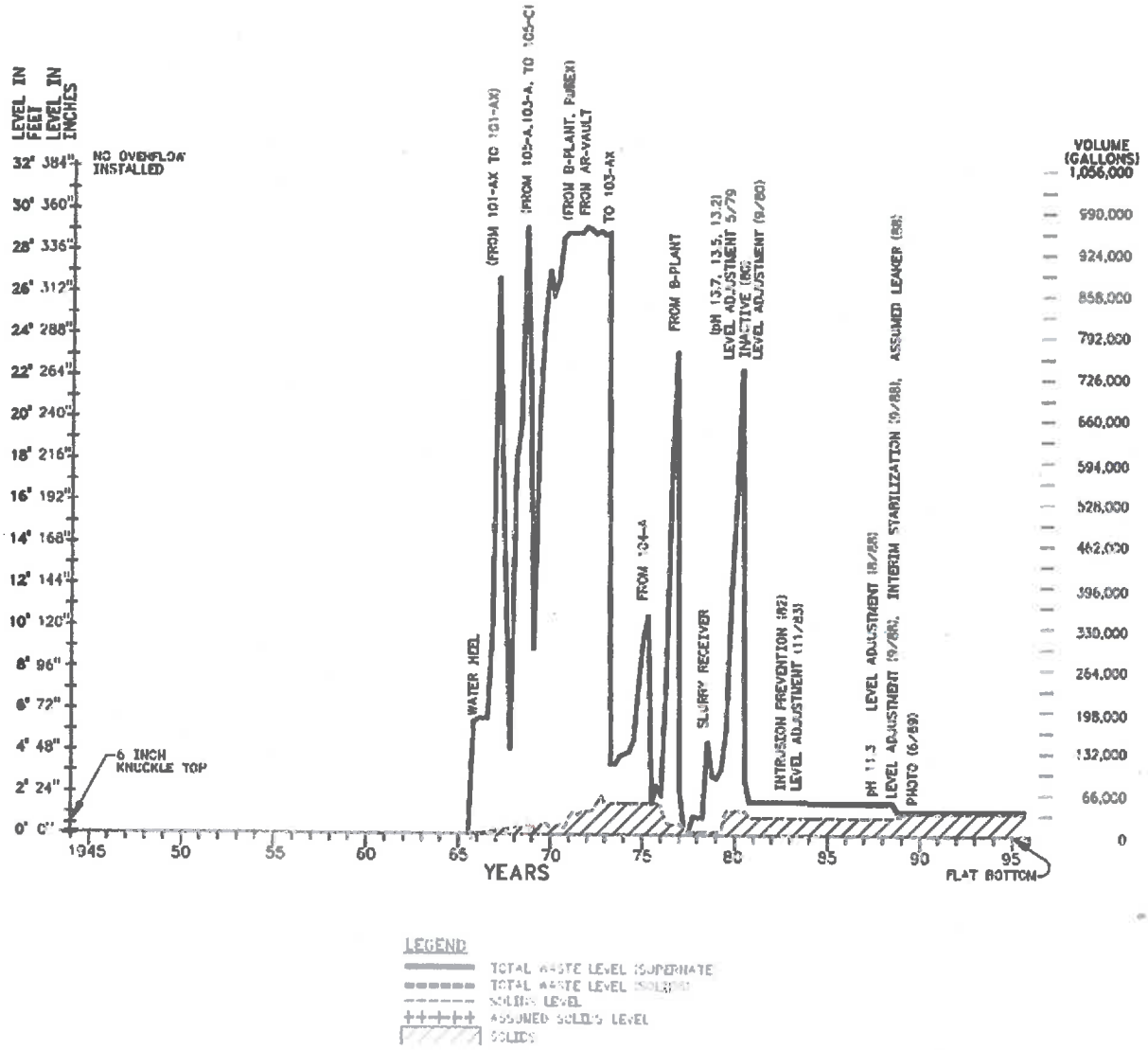

3.0 PLANNED RETRIEVAL TECHNOLOGY

...describe the retrieval technology or technologies to be implemented...

This section provides a description of the waste retrieval technologies that will be used, if needed, in tank AX-102. The first technology is sluicing using an extended reach sluicing system (ERSS). The second technology is high pressure water using the ERSS. The rationale for selection technologies is provided in Section 3.3. However, in accordance with Appendix C, Part 1 of the Consent Decree:

> If 360 cubic feet is reached with the first retrieval technology, the first retrieval technology shall be used to the "limits of technology" and a second retrieval technology shall not be required.

Retrieval activities will switch from one technology to the other as required in an attempt to reach the Consent Decree residual waste goal.

In accordance with the Consent Decree, Appendix C, Part 1:

> If the waste residual goal of 360 cubic feet is not achieved using the established two technologies, an additional retrieval technology established in a revised TWRWP shall be deployed to the "limits of technology;" provided that DOE may request that the State agree that DOE may forego implementing a third retrieval technology if DOE believes implementing such technology is not practicable under the criteria set forth above [in Appendix C, Part 1 of the Consent Decree].

Ecology approval of a change to revision 1 of this document (2019-01), includes the acknowledgment of USDOE's request to modify the design of the retrieval system. USDOE originally intended to install three extended reach sluicers, but a shield plug could not be removed in one of the pits to make room for the third sluicer. Accordingly the revised design is to install only 2 sluicers. Ecology recognizes that this change will likely result in a loss of retrieval efficiency and operational redundancy. However, for the purposes of monitoring compliance with the Consent Decree retrieval requirements, this revision to the design of the retrieval system will not alter or limit USDOE's obligation to achieve the same "limits of technology" as the design for 3 sluicers, which may require the deployment of an additional technology.

3.1 SYSTEM DESCRIPTION

...describe the retrieval technology or technologies to be implemented... and *system description*

This section provides a description of the waste retrieval system (WRS) and how it will be operated. Continued design development and incorporation of lessons learned may lead to changes in the design and/or operating strategy.

3.1.1 Physical Description

The in-tank WRS equipment will consist of an ERSS sluicing system to mobilize and retrieve waste from tank AX-102. The sluicing system will include ~~three~~ two ERSSs, ~~one more than C farm tanks,~~ with a centrally positioned slurry pump. The ERSSs will be positioned in the tank so that the nozzles can be moved in close proximity to the waste on the tank floor while still being high enough to be able to spray down into most of the aiflift circulators. The ERSSs will be controlled from a control trailer located outside the tank farm fence. The ERSSs will be installed in existing tank risers located roughly midway between the center of the tank and the tank wall (see Figure 2-3 and Table 3-1 for locations). The sluice nozzles will have the capability to direct liquid at various locations in the tank. The WRS will have the capability to use high pressure water to break apart hard agglomerations of waste. The WRS will also have the capacity to use hot or cold water for sluicing.

The configuration of tank AX-102 includes four concrete pits; the central pump pit contains two risers. The drains in the pits will be covered so that a buildup of liquid can reach the leak detector. A sump pump will be used to pump accumulated liquid into the tank. The WRS for tank AX-102 may require design and construction of riser extensions to support the installation of the sluice nozzles and a slurry pump. Table 3-1 provides the planned riser use for tank AX-102. This riser use may change.

Table 3-1. Planned Riser Use for Tank AX-102 Waste Retrieval System.

Riser Number	Tank AX-102
001A	Sluicer/ERSS
001B	~~Sluicer/ERSS~~obstructed riser
001C	Sluicer/ERSS
003A	Exhauster Con~~n~~nection/Camera
005A	Spare
005B	Slurry Pump
007A	Camera
007B	Sample Sleeve/Chemical Addition Port
007C	Camera
009B	ENRAF
009C	Camera
009D	Exhauster Inlet/Vacuum Controller
009E	Camera
009F	Exhaust
009G	Camera

Source: RPP-RPT-57187 and H-14-020109

The new slurry pump will be installed in a riser located in the center pit. The slurry pump design for tank AX-102 will allow the pump installation height to be adjusted to facilitate maximum

The retrieval process will be monitored using closed-circuit television to facilitate waste retrieval and aid in efficiently retrieving the tanks. Raw water will be used for waste mobilization and conveyance, transfer line flushing, equipment flushing, heel flushing, or as required for miscellaneous use. The liquid in tank AX-102 will be recycled and used to sluice and dissolve saltcake waste reducing the amount of water needed for retrieval. During all retrieval activities the tank liquid level will be maintained below the maximum waste level designated in the process control plan.

During all field activities, standard operating procedures and safety precautions will be implemented to protect worker health and safety, the public, and the environment. In accordance with standard operating procedures, health physics and industrial health technicians will monitor conditions within the tank farm in accordance with approved monitoring plans.

When the level of residual solids gets low in the tank, the volume of solids removed per unit volume of sluicing fluid removed from the tank or per unit of time or transfer will be tracked. The units used will be selected by engineering personnel.

The project will determine when a tank retrieval is complete by following the Consent Decree requirements stating "that the recovery rate of that retrieval technology for that tank is, or has become, limited to such an extent that it extends the retrieval duration to the point at which continued operation of the retrieval technology is not practicable, with the consideration of practicability to include matters such as risk reduction, facilitating tank closures, cost, the potential for exacerbating leaks, worker safety and the overall impact on the tank waste retrieval and treatment mission."

There is no limit of technology definition for an ERSS waste retrieval process. A limit of technology definition will not be developed until sufficient ERSS retrieval operations have been performed to enable development of a justifiable definition. Until an ERSS limit of technology definition is developed the same value used for modified sluicing in RPP-50910 is applied to ERSS retrieval operations.

The limit of technology for modified sluicing is defined in RPP-50910, *Single-Shell Tank Waste Retrieval Limit of Technology Definition for Modified Sluicing*, as when the concentration of SST waste in the retrieved slurry sent to the DST is within, or bracketing, the range of 0 to 0.6 volume percent. This limit of technology is used to gauge whether or not other retrieval technologies have reached their limit of technology.

The evaluation of limit of technology will consider all the requirements stated in the Consent Decree. Evaluation of risk reduction will include application of an AX risk decision assessment tool approved for use by both DOE-ORP and Ecology. The evaluation will be based on the estimate of remaining volume and projected concentrations of waste constituents.

Experience has shown that unexpected waste forms and tank conditions may be encountered and that equipment performance can degrade with time. The DOE-ORP will inform Ecology at least every two weeks, through normally scheduled meetings, about unexpected waste forms, behavior, and tank conditions, along with retrieval equipment performance changes that would

impact overall retrieval rates and retrieval volume. If a normally scheduled meeting does not occur, Ecology will initiate a meeting for this information exchange.

At these meetings, DOE-ORP will provide to Ecology the basis and rationale for continuing retrieval when it is suspected that waste form behavior, tank condition and/or equipment performance has diminished significantly or performance impacted the ability of the deployed equipment to operate in order to meet the waste residual goal of 360 ft^3.

The following information will be used to evaluate termination of retrieval and will be shared with Ecology prior to a decision to terminate field retrieval activities:

a. System performance and efficiency data.

b. In-tank visual confirmation of tank condition and waste retrieval.

c. Preliminary volume estimates using tank geometry and in-tank structural features.

d. Presentation and discussion of alternate system configurations and process modifications to enhance retrieval performance.

e. Presentation and discussion of residual sample location.

TFC-ENG-CHEM-P-47, *Single-Shell Tank Retrieval Completion Evaluation*, provides the methodology to follow for determining when an SST undergoing waste retrieval has reached the end of the retrieval process. The following summary of this procedure does not take the place of TFC-ENG-CHEM-P-47, and for any differences between this summary and the latest version of the procedure, the procedure takes precedence. Refer to TFC-ENG-CHEM-P-47 for details of the summary steps.

a. When waste retrieval starts, engineering personnel will begin tracking retrieval performance (e.g., percent of waste retrieved) and provide a weekly status report. Weekly status information will be forwarded to Ecology to brief them on retrieval activities, including residual volume estimates and performance parameters. Ecology will be invited to view waste retrieval activities and video images of the in-tank operations.

b. Engineering shall recommend configuration or procedure changes to enhance recovery as warranted. Management is notified after performance efficiency or retrieval rate has reduced significantly.

c. An attachment to TFC-ENG-CHEM-P-47 provides guidance for retrieval performance and limit of technology evaluations. Establishment of when the limits of technology have been reached includes the following:

    1. Examination of in-tank images to observe/record waste contours and characteristics.

Figure 3-2. Tank AX-102 Waste Retrieval System In-Tank Components.

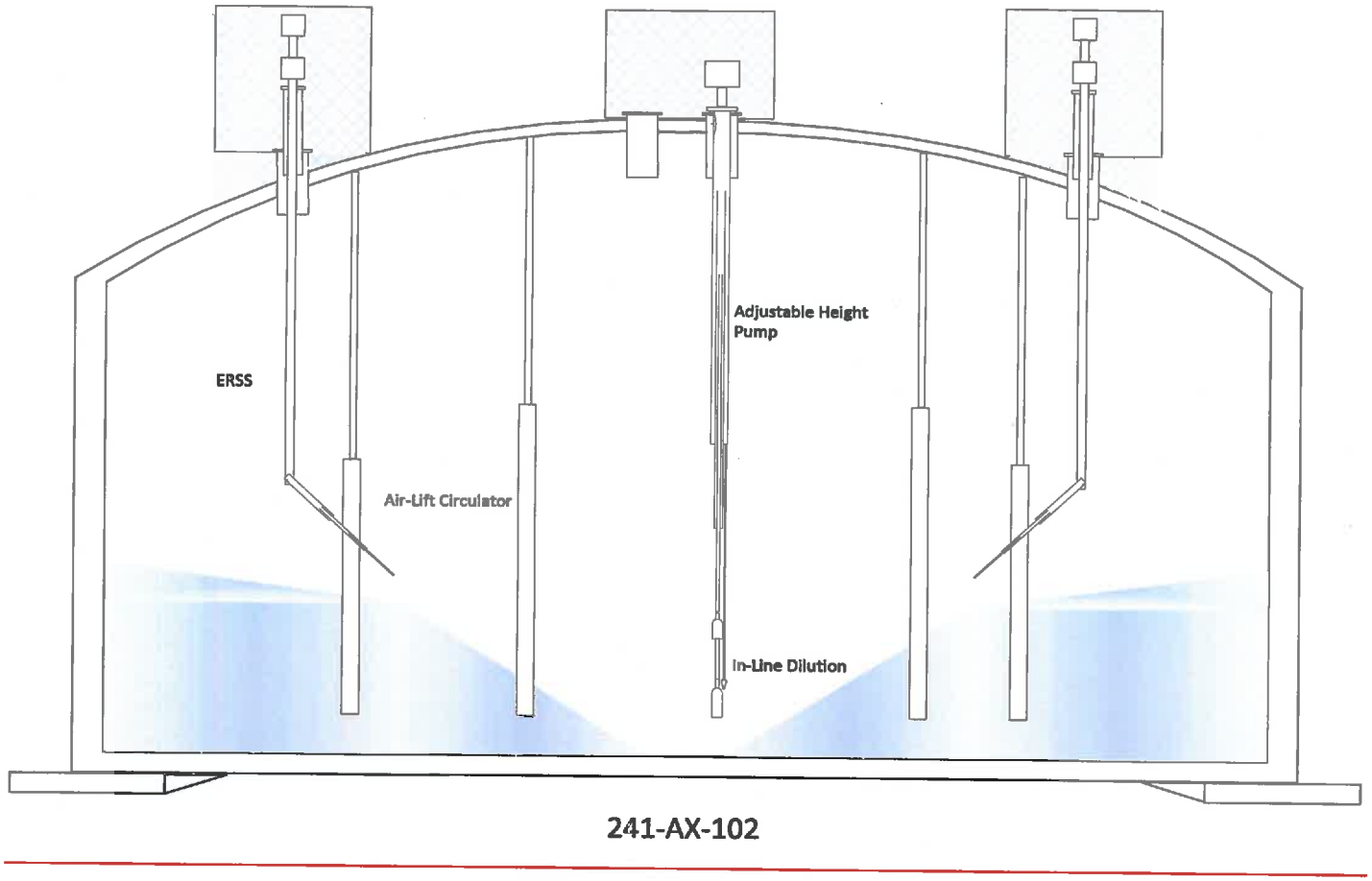

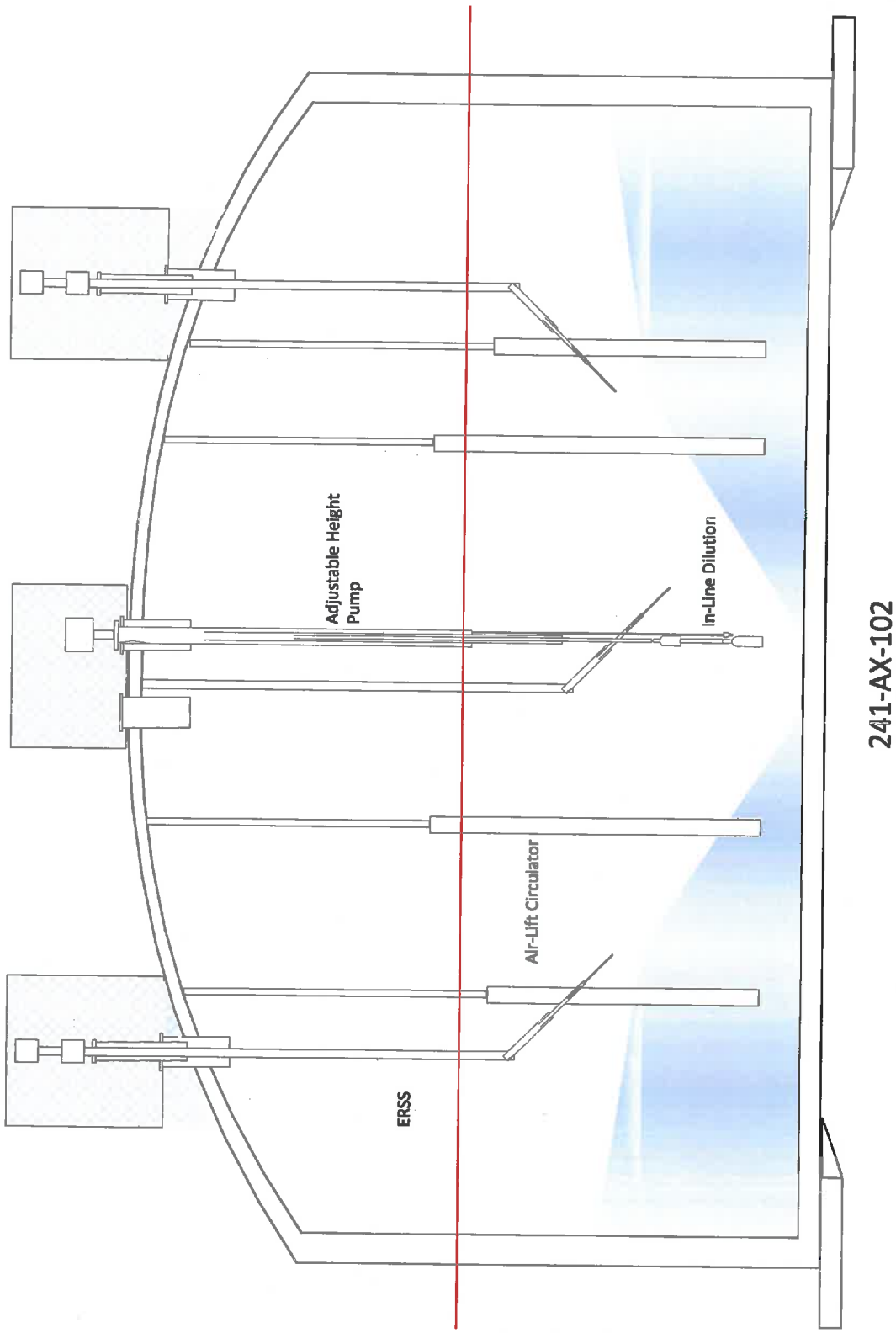
Adjustable Height Pump
In-Line Dilution
Air-Lift Circulator
ERSS
241-AX-102

Figure 3-3. Tank AX-102 Waste Retrieval System In-Tank Components.

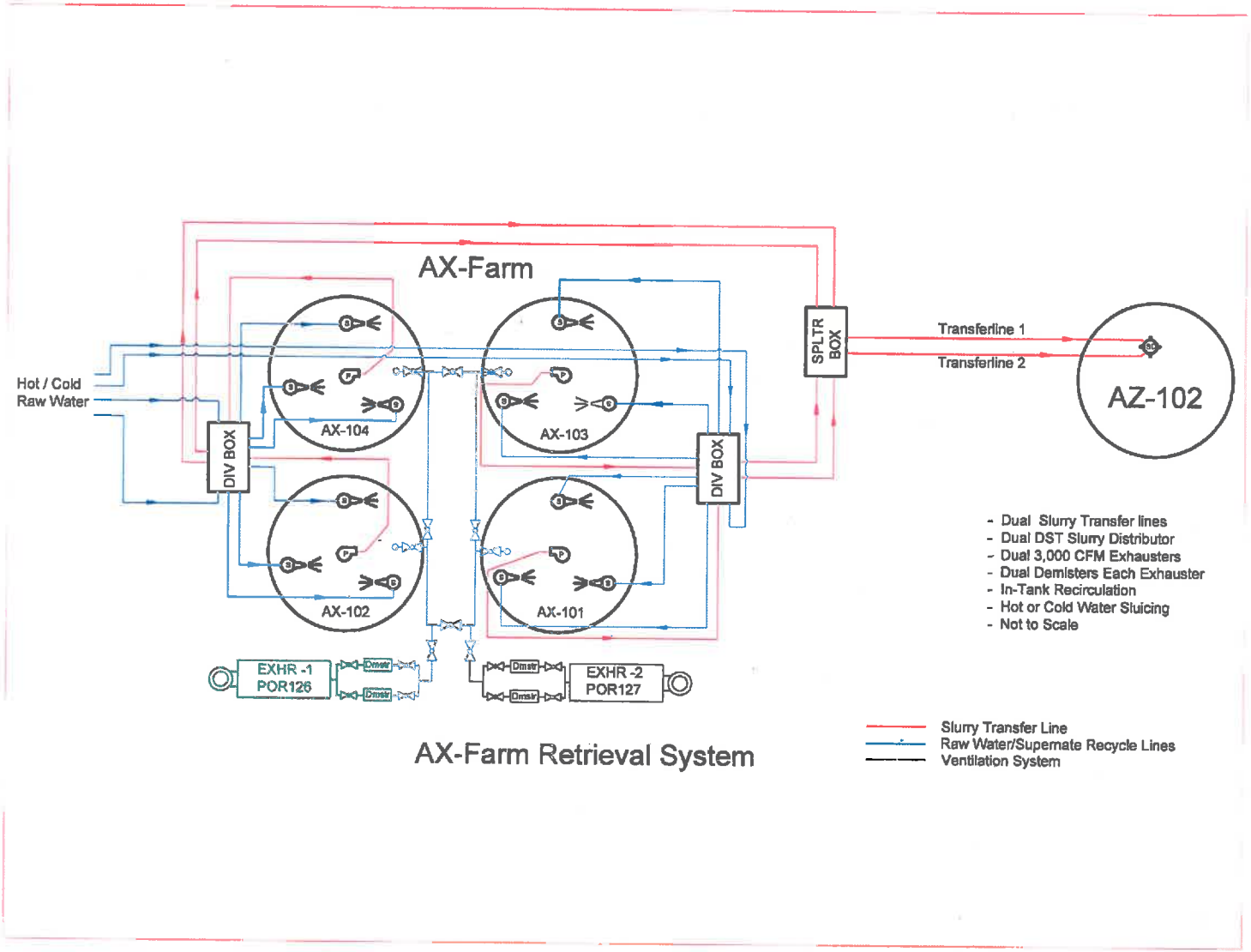

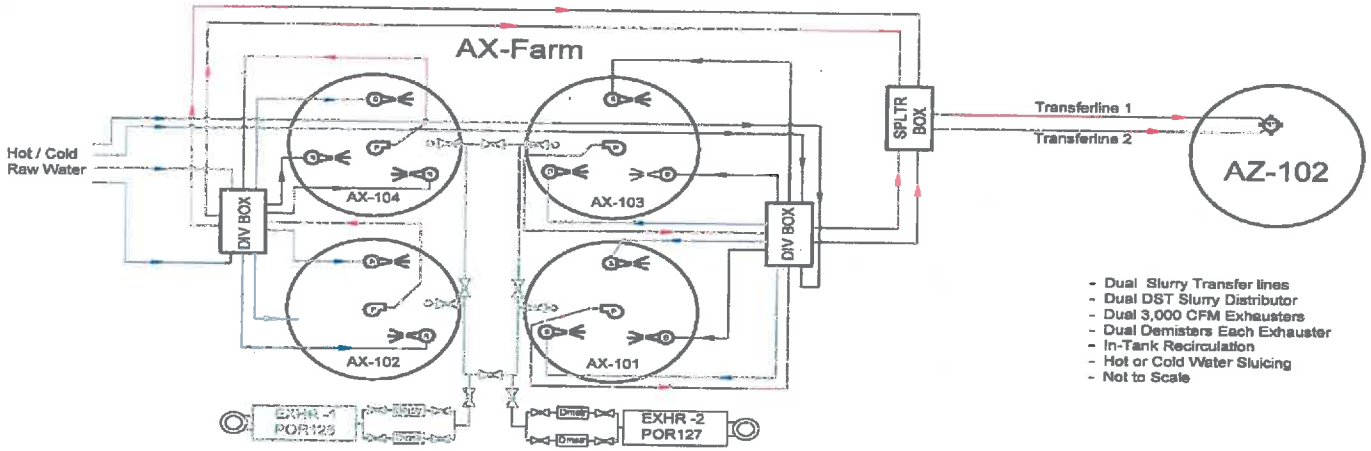

AX-Farm Retrieval System

3.9.2 Disposition of Existing Ancillary Equipment

Ancillary equipment associated with tank AX-102 is limited to waste transfer lines and equipment installed in pits and above-grade risers. The current status of the ancillary equipment associated with tank AX-102 is described in Section 2.2. Any existing contaminated ancillary equipment located within risers that needs to be removed following waste retrieval will be packaged and disposed of onsite in accordance with the approved waste acceptance criteria for the Hanford Site burial grounds or controlled as specified in TFC-OPS-WM-C-10.

In accordance with the current plans for development and submittal of the SST System Closure Plan under HFFACO milestone series M-45-00 and HFFACO Appendix I, disposition of the ex-tank ancillary equipment, including pipelines, will be performed in accordance with a separate component closure activity plan. Closure plans will be incorporated into the Hanford Facility RCRA Permit Revision 8C, or the renewed permit referred to as the Hanford Facility Dangerous Waste Permit, Revision 9, as appropriate.

3.10 AIR MONITORING PLAN

Operational requirements during retrieval

Monitoring shall be conducted in accordance with the approved criteria and toxics air permit and the radioactive air emissions licenses, and health and safety monitoring program. ORP and the Tank Farm contractor, pursuant to federal requirements for protection of their workers, will develop and implement industrial hygiene (IH) monitoring plans for exhauster stack emission for the retrieval of tank AX-102.

~~. ORP and the Tank Farm Contractor, pursuant to federal requirements for protection of their workers, will develop and implement industrial hygiene (IH) monitoring plans for exhauster stack emissions for the retrieval of tank AX-102. The plans will be developed and implemented pursuant to the requirements of TFC-PLN-34, *Industrial Hygiene Exposure Assessment Strategy*. The chemicals of potential concern (COPC), for which exhauster stack sampling and analysis will be conducted, will be identified in the IH monitoring plan for the retrieval. The COPC identified in the IH monitoring plans, as determined to be appropriate by the Tank Farm Contractor IH, will be all or a subset of those constituents listed in RPP-20949, *Data Quality Objectives for the Evaluation of Tank Chemical Emissions for Industrial Hygiene Technical Basis*, Table 4-1, developed with input from Ecology and RPP-22491, *Industrial Hygiene Vapor Technical Basis*. No COPC shall be dropped from the Tank Vapor Information Sheet (TVIS) list developed for AX Farm without 90 days prior notification to and approval from Ecology. If ORP notifies Ecology of its desire to cease exhauster stack sampling for a COPC initially identified and listed in an IH monitoring plan and no response is received from Ecology within 90 days, the COPC will be deleted from the IH monitoring plan and sample and analysis activities for that COPC will cease. New COPCs may be added to an IH monitoring plan without notification to or approval from Ecology and without modifying or revising this TWRWP.~~

~~The sampling and analysis methods shall be EPA, National Institute for Occupational Safety and Health, or Occupational Safety and Health Administration approved methods, or an equivalent Tank Farm Contractor approved method, as identified in RPP-20949. The exhauster stack~~

~~samples will be analyzed at the 222-S Laboratory, or an equivalent laboratory consistent with the quality assurance/quality control procedures for that laboratory. Further, laboratory analysis data will be kept on file at the laboratory consistent with the laboratory record keeping procedures for a period of not less than five years and will be available to Ecology within 24 hours on request.~~

~~Ecology and ORP understand and agree that the activities discussed above do not restrict ORP and the Tank Farm Contractor from taking any and/or all steps necessary as ORP and the Tank Farm Contractor deem appropriate to protect its workforce in response to data and information generated by an IH monitoring plan or incidents as they might arise during waste retrieval. Ecology and ORP also understand and agree that the preceding sampling and analysis discussion is presented to ensure ORP is achieving the agreed to sampling and analysis for the protection of the public and its workers and does not modify the exemption from the requirements of 40 CFR 264, "Standards for Owners and Operators of Hazardous Waste Treatment, Storage, and Disposal Facilities," and 40 CFR 265, "Interim Status Standards for Owners and Operators of Hazardous Waste Treatment, Storage, and Disposal Facilities," Subpart CC, granted to ORP under 40 CFR 265.1080(b)(6) incorporated by reference in WAC 173-303-400(3)(a). Therefore, this discussion does not imply any change to the respective authority of either Ecology or ORP regarding the sampling, analysis, monitoring, and control of airborne emissions from Hanford Site tanks.~~

4.0 DESCRIPTION OF PLANNED LEAK DETECTION AND MONITORING TECHNOLOGIES

Leak detection monitoring and mitigation plan, including technology description, rationale for selection, configuration, inspection and monitoring requirements, mitigation response, and anticipated performance goals

4.1 EXISTING TANK LEAK MONITORING

This section describes tank leak monitoring activities that have been historically performed or are currently being performed.

Prior to beginning retrieval operations, SSTs are in waste storage mode. The requirements for leak detection while in waste storage mode are provided in OSD-T-151-00031. When retrieval operations are ready to commence for AX-102 the tank enters retrieval mode as described in 1.4.

4.1.1 Drywell Monitoring

Seven drywells that are in the vicinity of tank AX-102 will be used for leak detection monitoring. The monitoring drywells are between 3 and 11 ft from the edge of the tank (Figure 4.1). The seven drywells are 11-02-01, 11-02-03, 11-02-04, 11-02-05, 11-02-07, 11-02-10, and 11-02-11. The drywells are from approximately 75 ft to 125 ft deep (GJ-HAN-50, *Vadose Zone Characterization Project at the Hanford Tank Farms Tank Summary Data Report for Tank AX-102*).

For tanks in waste storage mode no routine drywell logging performed.

4.1.2 Existing Tank Level Monitoring Equipment and Activities

In tank AX-102 liquid observation wells (LOW) are used for intrusion/leak detection monitoring. The receiver DST annulus has three leak detection devices installed, such as ENRAF level gauges or similar instruments and continuous air monitors for detection of leaks from the tank primary tank liner.

The waste level in tank AX-102, while in storage mode, is monitored for intrusion only on a quarterly basis (OSD-T-151-00031). The basis for in-tank leak detection and intrusion monitoring while in storage mode is provided in RPP-9937, *Single-Shell Tank System Leak Detection and Monitoring Functions and Requirements Document.*

The primary level monitoring in the receiver DST is performed as described in OSD-T-151-00031, Section ~~3~~2.0. The three annulus leak detector instruments provide indication of tank leaks as described in OSD-T-151-00031, Section ~~3~~2.0.

Level monitoring for the tank receiving the exhauster condensate, if not AX-102, will be performed as specified in the applicable Ecology approved TWRWP for that tank or estimated on a quarterly basis when requested by Ecology.

4.2 PROPOSED LEAK DETECTION MONITORIN SYSTEM DESCRIPTION

Leak detection monitoring and mitigation plan, including ***technology description****, rationale for selection, configuration, inspection and monitoring requirements, mitigation response, and anticipated performance goals.*

This section provides a description of the leak detection and monitoring (LDM)™ system that will be deployed at tank AX-102 during waste retrieval along with a description of how it will be operated.

The definition of when a tank is changed from storage mode to retrieval mode is provided in OSD-T-151-00031. A tank is considered to be officially in retrieval status if one of two conditions is met: either waste has been physically removed from the tank by retrieval operations or, preparations for retrieval operations are directly responsible for rendering a primary leak detection or intrusion monitoring device out of service.

When all waste removal operations have been completed, a final waste volume measurement is obtained, and all post-retrieval monitoring required by this document is completed, the tank retrieval status is maintained but retrieval leak detection is complete and the tank is monitored for intrusion as specified in Section 6.

4.2.1 Description of Proposed LDM System Configuration Used During Waste Retrieval

The LDM method for tank AX-102 during retrieval is an HRR LDM system with drywells and the tank thermocouple as electrodes. The HRR system will be fully implemented administratively as well as physically implemented in the field when used.

Established drywell logging methods will be used to survey the drywells surrounding tank AX-102 prior to the start of retrieval, and will be used as a backup means of leak detection if the HRR system becomes inoperable. The use of drywell logging as a backup is specified in 4.2.1.1.

Under limited conditions, as specified in 4.2.1.2, SST liquid level measurement may also be used for leak detection and monitoring.

Figure 4-~~3~~2 is a logic chart showing what leak detection method(s) are used, and when. Details of the methods shown in Figure 4-~~3~~2 are provided in 4.2.1.1 through 4.2.1.3.

LDM systems consisting of standard leak detection arrangements are used for transfer lines and pits.

The LDM system used for the receiver DST is the same one described in Section 4.1.~~3~~2.

Any resulting changes to LDM activities described in this TWRWP will be approved by Ecology within 24 hours through the Change Notice form.

™ Leak Detection and Monitoring (LDM) is a trademark of hydroGEOPHYSICS, Inc., Tucson, Arizona

moisture content observed during moisture logging and access is not practical for any gamma monitoring system, Ecology will be informed and an alternate means of investigation proposed.

Since post-retrieval gamma scans are to be performed following retrieval, there is no need to perform a post-retrieval moisture scan.

Drywell logging, when performed as a backup leak detection method, will monitor specific region(s) of interest for increases in soil moisture (or gamma) content. These may include the interval from above the existing waste surface to below the base of the tank. The depth interval to log when drywell logging is performed as a backup leak detection method will be specified in the process control plan.

Due to operational constraints, required drywell logging may be missed occasionally if it is used as backup to HRR. Ecology will be informed of missed required drywell monitoring.

Pre- and post-retrieval drywell gamma logging and any gamma logging done during retrieval operations may be performed with the radionuclide assessment system (RAS) truck, Retrieval Drywell Monitoring System (RDMS), or the spectral gamma system (SGLS). Moisture logging will be performed with hand-held moisture probes or any of the vehicle mounted systems setup for moisture logging. The following background information describes the drywell logging tools, what they measure, and general measurement capabilities.

The handheld moisture gauge is a commercially available system (model 503DR HYDROPROBE®)[4] designed for manual measurement of in situ moisture content. This unit employs an ^{241}Am/Be neutron source and a neutron detector to measure the neutron flux rate at a given depth in the drywell. A formula is then used to relate the neutron flux rate to volume percent moisture in the soil. Use of the handheld moisture gauge does not require truck access into the tank farm and is more practical for frequent use.

The RAS truck was specifically designed for routine gamma monitoring against the baseline established from the spectral gamma logging system data. The RAS uses a series of three interchangeable NaI(Tl)-based scintillation detectors for measurement over the range from background levels to about 10^5 pCi/g ^{137}Cs. The RAS records counts in specific energy ranges as well as total gamma activity. Although it does not have the energy resolution capability of the spectral gamma logging system, it is mounted on a smaller truck and collects data at a faster rate.

The RDMS handheld gamma logging system development began in 2014 and was completed and tested for use in 2019. The handheld system was developed so that gamma logs of the drywells could be obtained as easily as moisture logs. The system uses a commercially available NaI detector and meter with a custom built cable. Bar codes are attached to the cable every six inches and the bar code scanner wirelessly communicates with the meter matching position and counts.

The SGLS logging system was used to establish baseline conditions in 1995-2000. This logging system is based on a liquid nitrogen cooled high purity germanium detector, which provides

[4] 503DR HYDROPROBE® is a registered trademark of CPN International, Inc., Concord, California.

excellent gamma energy resolution for identification and quantification of individual radionuclides from background levels (method detection limit about 0.1 pCi/g ^{137}Cs under typical conditions) up to about 10,000 pCi/g ^{137}Cs. A high rate detector with internal and external shields is available to extend the measurement range to about 10^9 pCi/g ^{137}Cs.

The SGLS truck can also be used to operate a neutron moisture logging system, which measures in situ vadose zone moisture over the range of 0 to about 25 vol% moisture content. The neutron moisture logging system uses a similar source-detector relationship as the handheld moisture gauge.

It takes about one shift of operation to obtain moisture or RDMS logging data from all the drywells around a tank with the hand-held moisture probe. It takes about one shift of operation to obtain RAS data from one drywell.

The handheld moisture gauge will be deployed by qualified personnel in accordance with TO-320-022, *Operate Model 503DR M1 HP-2 or M1HP-3 Hydroprobe Neutron Moisture Detection* or TO-320-060 *Operate Model 503DR M1 HP-4 Hydroprobe Neutron Moisture Gauge*.

The logging systems will be deployed by qualified personnel in accordance with the applicable procedures for that equipment.

The results from drywell monitoring, as well as a summary and analysis of this monitoring, including tools used, calibration, boreholes logged, depth of logging, frequency, logging rate, and data analysis will be submitted to Ecology within the retrieval data report.

4.2.1.2 Leak Detection Using SST Liquid Level Measurement

Should conditions exist where a continuous liquid surface measurement is available (e.g., a pump fail prior to removing as much liquid as practical from the tank and replacement of the pump cannot occur immediately) this measurement could provide an additional means of leak detection superior to either drywell monitoring or HRR. SST Liquid level measurement can be used for leak detection during waste retrieval under the following conditions:

a. The tank level gauge must be an ENRAF level gauge of the type normally used in tank farms.

b. There must be a liquid surface under the ENRAF plummet, with no part of the plummet touching any waste solids or the tank bottom.

c. There are no active retrieval operations being performed.

d. The tank is not being actively exhausted except as required to meet air permit requirements.*

e. The measured waste level is not increasing, such as can occur if liquid is slowly draining from waste solids above the liquid surface.

5.0 REGULATORY REQUIREMENTS IN SUPPORT OF RETRIEVAL OPERATIONS

Functions and associated requirements necessary to support design of proposed waste retrieval and leak detection monitoring and mitigation system(s).

Retrieval of waste from the SSTs will be performed under the requirements of the Consent Decree, the *Atomic Energy Act of 1954*, and RCRA, RCW 70.105, "Hazardous Waste Management Act" and their implementing regulations. The SSTs do not provide secondary containment and are not compliant with RCRA, RCW 70.105 and some interim facility standards of Subpart J of 40 CFR 265. The SSTs are currently authorized to continue operations under the interim status standards pending closure in accordance with WAC 173-303-610, "Closure and Post-Closure," under the authority of HFFACO Action Plan Section 5.3, and Milestones series M-45-00. Interim status standards are authorized pursuant to the Hanford Facility RCRA Permit, Condition I.A. In addition to the regulatory requirements for interim status, the Hanford Facility RCRA Permit also imposes requirements on interim status Treatment, Storage, and /or Disposal Units based on those requirements identified in the Permit Applicability Matrix (Hanford Facility RCRA Permit Attachment 9). DOE-ORP conducts day-to-day operations of the SSTs in accordance with the interim status standards established in WAC-173-303-400(3), "Interim Status Facility Standards," to the extent practicable as documented in various compliance agreements. Additionally, the SSTs are governed by federal regulations promulgated under the authority of the *Atomic Energy Act of 1954* and various DOE directives incorporated into the contract between DOE-ORP and the Tank Farm Contractor (DE-AC27-08RV14800). These requirements are implemented through operating plans and procedures by the Tank Farm Contractor.

Interim status facility standards in WAC 173-303-400(3)(a) incorporate by reference the interim status standards set forth by EPA in 40 CFR 265 Subpart J for tank systems. Elements of the interim status standards relevant to the WRS along with the WRS features and/or operating plans and procedures are summarized in Table 5-1.

The ventilation system(s) used during waste retrieval operations are designed to pass air through the tank, thereby reducing condensation and fog within the tank. The ventilation systems required by the Washington State Department of Health include a heater, prefilter, demister, two high-efficiency particulate air filters and test sections, exhaust fan, and stack. Details of the ventilation systems are provided in 00-05-006, *Hanford Site Air Operating Permit*, as amended and succeeded.

8.0 REFERENCES

00-05-006, Hanford Site Air Operating Permit, Washington State Department of Ecology, Olympia Washington, as amended and succeeded.

10 CFR 830, "Nuclear Safety Management," *Code of Federal Regulations*, as amended.

10 CFR 835, "Occupational Radiation Protection," *Code of Federal Regulations*, as amended.

29 CFR 1910, "Occupational Safety and Health Standards," *Code of Federal Regulations*, as amended.

29 CFR 1926, "Safety and Health Regulations for Construction," *Code of Federal Regulations*, as amended.

40 CFR 264, "Standards for Owners and Operators of Hazardous Waste Treatment, Storage, and Disposal Facilities," *Code of Federal Regulations*, as amended.

40 CFR 265, "Interim Status Standards for Owners and Operators of Hazardous Waste Treatment, Storage, and Disposal Facilities," *Code of Federal Regulations*, as amended.

40 CFR 268, "Land Disposal Restrictions," *Code of Federal Regulations*, as amended.

40 CFR 302, "Designation, Reportable Quantities, and Notification," *Code of Federal Regulations*, as amended.

40 CFR 761, "Polychlorinated Biphenyls (PCBs) Manufacturing, Processing, Distribution, Commerce, and Use Prohibitions," *Code of Federal Regulations*, as amended.

Atomic Energy Act of 1954, 42 USC 2011 et seq., as amended.

CHPRC-02485-VA, 2015, *Groundwater Flow Beneath Waste Management Area A-AX,* CH2M HILL Plateau Remediation Company, Richland Washington

Consent Decree No. 2:08-cv-05085-FVS, United States District Court Eastern District of Washington, October 25, 2010, as amended by the Amended Consent Decree, Case No. 2:08-cv-05085-RMP (March 11, 2016), ~~and~~ the Second Amended Consent Decree, Case No. 2:08-cv-05085-RMP (April 12, 2016), and the Third Amended Consent Decree, Case No. 2.08-cv-05085-RMP (October 12, 2018).

DOE, 2003, *Dangerous Waste Permit Application—Single-Shell Tank System*, Rev. 8, U.S. Department of Energy, Washington, D.C.

DOE, 2011, *Dangerous Waste Permit Application—Single-Shell Tank System*, Rev. 13, U.S. Department of Energy, Washington, D.C.