AR TARGET SHEET

The following document was too large to scan as one unit; therefore, it has been broken down into sections.

DOCUMENT#	BNFL-5193-RCRA-01
TITLE	River Protection Project Waste Treatment Plant Dangerous Waste Permit Application (5 volumes)
EDMC#	0053076
SECTION	3 of 11

53076
2/6

BNFL Inc.

BNFL-5193-RCRA-01, Rev. 2

RIVER PROTECTION PROJECT
WASTE TREATMENT PLANT

RPP-WTP DANGEROUS WASTE PERMIT APPLICATION

Volume II

April 28, 2000

Prepared for:

U.S. Department of Energy
Richland Operations Office
Contract DE-AC06-96RL13308

Prepared By:

BNFL Inc.
3000 George Washington Way
Richland, Washington 99352

Appendix 2A

Appendix 2A
RPP-WTP Site Plot Plan (Topographic Map)

DWG No. DWG-W375 BF-C00001

NOTES:

1. ELEVATIONS OUTSIDE THE RPP BOUNDARY ARE SHOWN IN METERS AT 2.5 METER INTERVALS. LABELED FALOR CONTOURS ARE AT 2.5 METER INTERVALS. CONTOUR ELEVATIONS WITHIN THE RPP-WTP BOUNDARY ARE THE METRIC EQUIVALENT OF THE RPP-WTP SITE ELEVATIONS. (WHICH ARE IN FEET).

2. THIS DRAWING DEFINES THE NECESSARY INFORMATION FOR THE DWPA SITE ARRANGEMENT. SEE DWG W375BF-C00002 AS THE DOCUMENT OF RECORD FOR DESIGN INFORMATION.

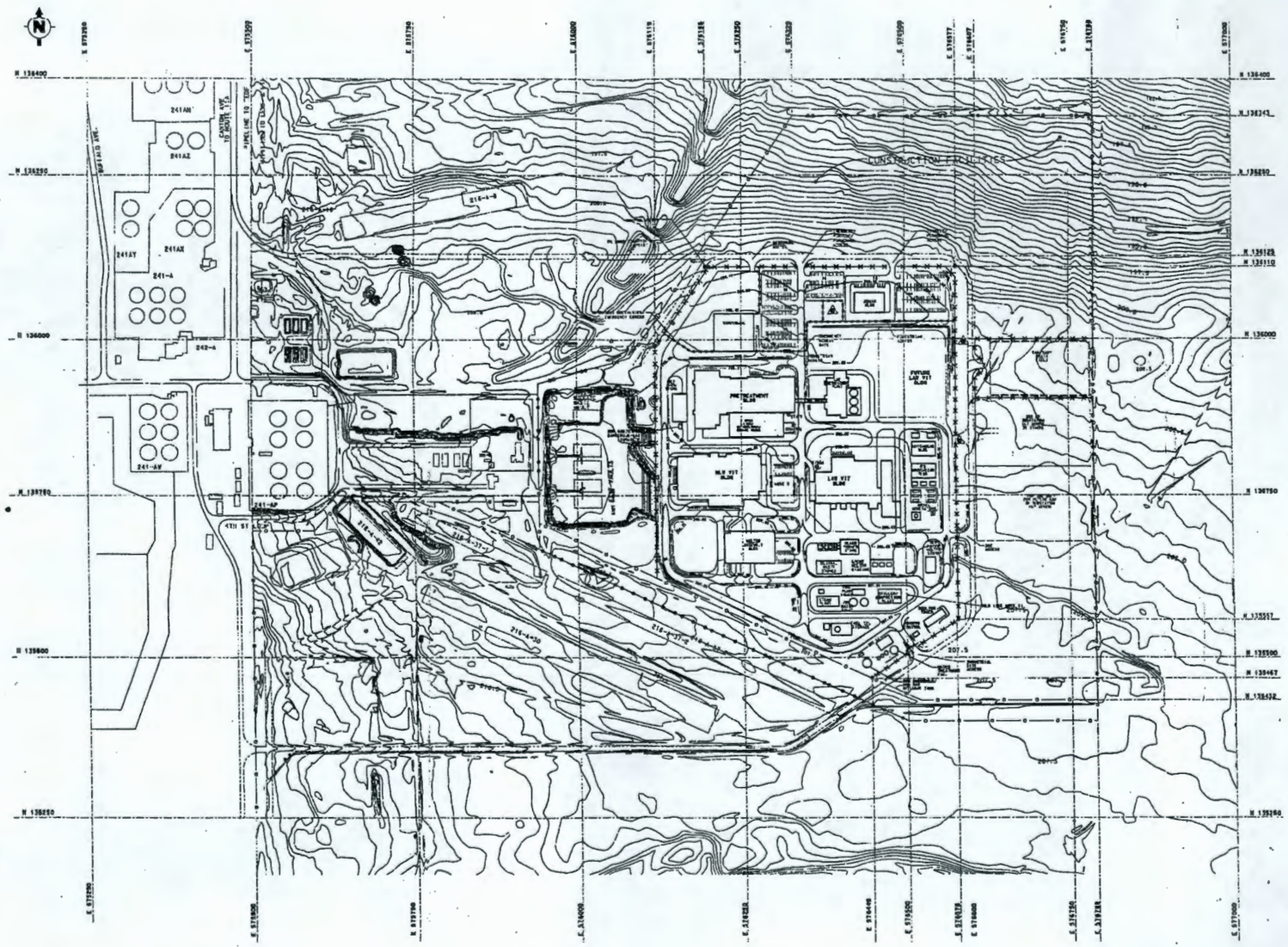

WIND ROSE FOR : 200L AREA PERIOD COVERED
STATION NO. 6 1/1/93 - 12/31/93

PADDLES INDICATE DIRECTION WIND IS COMING FROM.
RADIAL GRIDS REPRESENT 0.0% AND 10% OCCURRENCE.

WIND CLASS	MILES/HOUR
1	>1.0 - 3.0
2	4.0 - 7.0
3	8.0 - 12.0
4	13.0 - 18.0
5	19.0 - 24.0
6	25.0 - 31.0
7	32.0 +

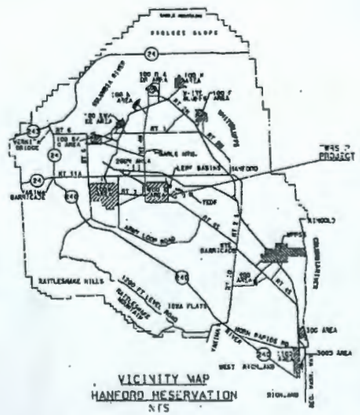

VICINITY MAP
HANFORD RESERVATION
NTS

LEGEND:

- ELECTRIC SUBSTATION
- EXISTING ROAD
- PROPOSED ROAD
- PC LOOP ROAD (W-5191)
- SECURITY FENCE
- EXISTING FENCE
- E 576700 WASHINGTON STATE GRID SYSTEM COORDINATE IN METERS
- DOE GROUNDWATER MONITORING WELL
- MINOR CONTOUR LINE
- MAJOR CONTOUR LINE

0 100 200 400 600 800 1000
SCALE: 1"=200'

262.48 0 131.24 262.48 524.96 787.44 1049.92 1312.40 FEET
80 0 40 80 160 240 320 400 METERS
METRIC SCALE

REV	DESCRIPTION	DRAWN	CHKD	APVD	DATE
1	ISSUED FOR APRIL 2000 DWPA	CMW			3/16/00
0	ISSUED FOR KOI	JRM	WJR	AJB	9/23/98

REVISION HISTORY

PROJECT No.	6375	
SITE	HANFORD	
AREA	200E /RPP-WTP	
BUILDING No.	10	
	BY	DATE
DESIGNER	J MILLER	----
CHECKED	W ROBERTS	----
APPROVED	AJ BOUS	9/23/98

BNFL INC.
RIVER PROTECTION PROJECT
WASTE TREATMENT PLANT
3000 GEORGE WASHINGTON WAY
RICHLAND, WA 99352

CONTRACT No. DE-AC06-96RL13304

RPP-WTP DWPA SITE PLOT PLAN

SCALE: 1"=200'
DWG No. DWG- W375BF-C00001
REV 1

FM REFERENCE No. DWG-W375-99-0163 REV 1
1" SIZE - 44x34
15 MAR 2000 13:05:14
COMPUTER GENERATED - MANUAL CHANGES NOT PERMITTED

Appendix 3A

Appendix 3A
River Protection Project – Waste Treatment Plant Waste Analysis Plan

BNFL Inc.

Document title:	**River Protection Project - Waste Treatment Plant Waste Analysis Plan**
Contract deliverable number:	B-1-35
Department:	Environmental, Safety, and Health Programs
Contract number:	DE-AC06-96RL13308
Author(s):	John Sipkowski
Principal Author Signature	
Document Number:	PL-W375-EN00006, Rev. 1
Checked by:	Jeffrey Markillie, REM
Principal Checker Signature	
Date of issue:	28 April 2000
Issue status:	Approved
Approved by:	O. Lee Bostic, PE
Approver's position:	Manager, Environmental Safety

Approver's signature

BNFL Inc.
RPP-WTP
3000 George Washington Way
Richland, WA 99352
United States of America
Tel: 509 371 3000
Fax: 509 371 3001

Circulation List

Purpose of issue: 1 For comment
2 For action
3 For information

Name	Location	No of copies	Remarks	Purpose of issue
A. Elsden	MPF, A217	1		3
K. Boomer	MPF, B222	1		3
L. Bostic	ETC-1, P123	1		3
S. Bostock	MPF, B142	1		3
M. Page	MPF, B223	1		3
I. Papp	ETC-1, N201	1		3
D. Swanberg	MPF, G113	1		3
B. Voke	MPF, I103	1		3
G. Voyles	MPF, B105	1		3

History Sheet

Rev	Date	Reason for revision	Revised by
A	7 May 1999	Draft	John Cook
B	3 November 1999	Draft	John Sipkowski
C	13 Dec 1999	Draft for Review	John Sipkowski
D	11 February 2000	Draft for Review	John Sipkowski
E	1 March 2000	Draft for Review	John Sipkowski
0	31 March 2000	Final	John Sipkowski
1	28 April 2000	Approved	John Sipkowski

Contents

Item | Page Number

Acronyms and Abbreviations vii

Glossary ix

1. Introduction [C-1] 1

2. RPP-WTP Unit Description [C-1] 3

2.1. Pretreatment 3
2.1.1. Low-Activity Waste Feed Pretreatment 4
2.1.2. High-Level Waste Feed Pretreatment 4

2.2. Vitrification Systems 5
2.2.1. Low-Activity Waste Vitrification 5
2.2.2. High-Level Waste Vitrification 5

2.3. Offgas Treatment Systems 6
2.3.1. Pretreatment Plant Offgas 6
2.3.2. Low-Activity Waste Pretreatment Plant Offgas 6
2.3.3. Low-Activity Waste Vitrification Offgas 6
2.3.4. High-Level Waste Vitrification Offgas 7
2.3.5. Air Emissions 7

3. Waste Acceptance [C-2] 12

3.1. Waste Description 12

3.2. Waste Feed Acceptance Process [C-3a] 12
3.2.1. Waste Feed Characterization [C-2a(3)], [C-2c] 12
3.2.2. Waste Feed Verification [C-2b(3)] 13
3.2.3. Waste Feed Profile [C-2b] 14
3.2.4. Preshipment Review 14
3.2.5. Non-Conformance Action [C-3c] 14
3.2.6. Waste Feed Confirmation [C-2b(1)] 15

3.3. Waste Acceptance Criteria [(C-2a)], [C-2a(1)], [C-2a(2)(a)], [C-2b(1)], and [C-2b(2)] 17
3.3.1. Organics 17
3.3.2. Incompatible Waste 18
3.3.3. Waste Feed pH 18
3.3.4. Polychlorinated Biphenyls 18

3.4. Waste Feed Designation 19
3.4.1. Ignitable Waste 19
3.4.2. Reactive Waste 20

3.5. Analytical Laboratories 21
3.5.1. RPP-WTP Analytical Laboratory 21
3.5.2. Selecting Other Analytical Laboratories 21
3.5.3. Establishing Quality Assurance/Quality Control Procedures For Laboratory Analysis 22

4. RPP-WTP Waste Streams [C-2] 29

Contents

Item — Page Number

4.1. **LDR Evaluation for Immobilized Waste [C-2a], [C-2a(1)]** 29
4.1.1. LDR Evaluation Approach 29
4.1.2. Waste Feed Sampling Location, Frequency and Method [C-2d] 30
4.1.3. LAW and HLW Waste Feed Analytes, Methods, Sample Volumes and Reporting Limits [C-2a(2)] 31
4.1.4. Glass Sampling and Analysis 31

4.2. **Secondary Waste Streams [C-2a], [C-2a(1)]** 33
4.2.1. Solid Waste Streams 34
4.2.2. Liquid Waste Streams 37

5. **Waste Transfer Documentation System [C-3]** 44

5.1. **Solid Waste Transfer** 44

5.2. **Liquid Waste Transfer** 44

5.3. **LDR Notification and Certification** 44

6. **Tracking System [C-4]** 45

6.1. **Inventory and Batch Tracking** 45

6.2. **Sample Tracking** 45

6.3. **Secondary Waste Stream Tracking** 46

7. **Recordkeeping** 48

References 49

Contents

Item | Page Number

FIGURES

Figure 2-1. Plan View of RPP-WTP 9
Figure 2-2. Simplified Flow Diagram and Sampling Locations 10
Figure 2-3. Pretreatment and LAW Pretreatment Offgas System 11
Figure 3-1. Example Auto Sampler 27
Figure 3-2. Example Manual Sampler Flow Path and Proposed "High Integrity" Sampling Cabinet 28
Figure 4-1. LDR Sampling Logic for ILAW 38
Figure 6-1. Plant Information Network Data Relationships 47

TABLES

Table 3-1. Summary of the Waste Feed Acceptance Process [C-3a] 23
Table 3-2. Summary of Dangerous Waste Numbers for RPP-WTP 24
Table 3-3. Waste Feed Analysis, Decision Criteria and Non-Conformance Actions [C-2a(2)], [C-2b(2)] 25
Table 3-4. Analysis for the Determination of Reactive Waste[a] [C-2a(2)] 26
Table 4-1. LDR Evaluation Analytes, Methods and TC Limits [C-2a(2)] 39
Table 4-2. Preparation and Analytical Methods for Inorganic Underlying Hazardous Constituents [C-2a(2)] 40
Table 4-3. Secondary Solid Mixed Waste Streams 41
Table 4-4. Variable Solid Waste Streams 42
Table 4-5. Liquid Mixed Waste Streams 43

Acronyms and Abbreviations

ALARA	as low as reasonably achievable
ASTM	American Society for Testing and Materials
BDAT	best demonstrated available technology
CFR	*Code of Federal Regulations*
DOE	US Department of Energy
DOE-RL	US Department of Energy, Richland Operations Office
DST	double-shell tank
DWPA	*Dangerous Waste Permit Application for the River Protection Project - Waste Treatment Plant*
Ecology	Washington State Department of Ecology
EPA	US Environmental Protection Agency
EQL	estimated quantitation limits
ETF	effluent treatment facility
HEME	high-efficiency mist eliminator
HEPA	high-efficiency particulate air (filter)
HLVIT	high-level vitrification
HLW	high-level waste
HSSWAC	*Hanford Site Solid Waste Acceptance Criteria*
HSLWAC	*Hanford Site Liquid Waste Acceptance Criteria*
ICN	integrated control network
IHLW	immobilized high-level waste
ILAW	immobilized low-activity waste
LAW	low-activity waste
LDR	land disposal restrictions
LERF	liquid effluent retention facility
LIMS	laboratory information management system
LSM	locally-shielded melter
NRC	Nuclear Regulatory Commission
PCB	polychlorinated biphenyl
QA	quality assurance
QAPjP	*Quality Assurance Project Plan for the Waste Analysis Plan* (BNFL Inc. 2000b)
QC	quality control
RCRA	Resource Conservation and Recovery Act of 1976
RPP-WTP	River Protection Project – Waste Treatment Plant
SAR	*Tank Waste Remediation System Final Safety Analysis Report* (DOE-RL 1999)
TC	toxicity characteristic
TCLP	toxicity characteristic leaching procedure
TOC	total organic carbon

TRU	transuranic
TSCA	Toxic Substances Control Act
TSD	treatment, storage, or disposal (facility)
UHC	underlying hazardous constituent
VOC	volatile organic compound
WAC	*Washington Administrative Code*
WAP	waste analysis plan
WTIS	waste tracking and inventory system

Glossary

This waste analysis plan relies on the definitions of terms as contained in Appendix 2B of the *Hanford Facility Dangerous Waste Permit Application, General Information Portion* (DOE-RL 1998) and the *River Protection Project - Waste Treatment Plant Dangerous Waste Permit Application* (BNFL 2000b), except as supplemented or amended below.

batch	Characterized waste staged in a single double-shell tank (DST) system unit waste tank for transfer to the River Protection Project – Waste Treatment Plant (RPP-WTP) for treatment.
feed characterization	Feed characterization refers to the process knowledge and/or sampling and analysis of the waste feed.
feed confirmation	The analyses that the RPP-WTP will conduct after receiving the waste feed, to confirm that the waste feed received is the same as the waste feed accepted for delivery.
feed verification	The activities the RPP-WTP will perform to verify that the staged waste feed meets the RPP-WTP acceptance criteria.
HLW feed	A highly radioactive mixed waste stream from the DST system unit tank farm, containing a high percentage by weight of solids.
HLW feed permeate	The liquid from the HLW feed ultrafiltration transferred to the low-activity waste (LAW) feed pretreatment.
immobilization	The act or process of reducing the mobility of waste constituents to limit their potential for long-term transport in the biosphere and subsequent exposure to humans, animals and plants. Vitrification is an example of an immobilization process.
LAW feed	A highly radioactive waste stream from the DST system unit tank farm containing a low percentage by weight of solids, and exhibiting a lower level of activity than the HLW feed. It is generally the supernatant portion of the tank waste.
LAW feed solids	The solids portion from the LAW feed pretreatment processes, which is transferred to the HLW feed pretreatment process.

Application Review Checklist

State of Washington Part B Permit Application Review Checklist for Treatment and Storage in Tanks and Containers, Section C

		Technically Adequate?	Location in WAP
C	Waste analysis		Chapter 3
C-1	Chemical, biological and physical analyses		1, 2
C-1a	Waste in piles		Not applicable
C-1b	Landfill wastes		Not applicable
C-1c	Wastes incinerated		Not applicable
C-2	Waste analysis plan		3, 4, and QAPjP (BNFL 2000b) [a]
C-2a	Detailed chemical, physical and/or biological analysis		3.3, 4.1, 4.2
C-2a(1)	Parameters and rationale		3.3, 4.1, 4.2
C-2a(2)	Analytical methods		Tables 3-3, 3-5, 4-1, 4-2, sections 4.1.3, 4.1.4.4, and QAPjP (BNFL 2000b) [a]
C-2a(3)	Generator-supplied analyses		3.2.1
C-2b	Additional requirements for wastes generated off-site		3.2.3
C-2b(1)	Parameters and rationale to confirm identity of off-site waste		3.2.6, 3.3
C-2b(2)	Analytical methods to confirm identity of off-site waste		3.3, Table 3-3
C-2b(3)	Representative sampling of incoming off-site wastes		3.2.2, 3.2.6.1, 4.1.2.1, 4.1.2.2, 4.1.4.1
C-2c	Methods for collecting samples for detailed and confirming analyses		3.2.2, 3.2.6.1, 4.1.2.3, 4.1.4.1
C-2d	Frequency of analyses		3.2.2.1, 3.2.6.1, 4.1.4.2, 4.1.4.3, 4.1.2
C-3	Manifest system		5
C-3a	Procedures for receiving shipments		3.2, Table 3-1
C-3b	Response to significant discrepancies		Not applicable
C-3c	Provisions for non-acceptance of shipment		3.2.5
C-3c(1)	Non-acceptance of undamaged shipment		Not applicable
C-3(2)	Contingency plan for damaged shipment		Not applicable
C-4	Tracking system		6

[a] BNFL 1999b. *River Protection Project – Waste Treatment Plant Quality Assurance Project Plan for the Waste Analysis Plan*, QP-W375-EN0004, Rev. 0. BNFL Inc., Richland, Washington, USA.

1. Introduction [C-1]

This waste analysis plan (WAP) describes the sampling and analysis for dangerous waste constituents for the River Protection Project – Waste Treatment Plant (RPP-WTP) to comply with the Washington State Dangerous Waste Regulations, contained in Chapter 173-303 of the *Washington Administrative Code* (WAC). It was prepared in accordance with the requirements of WAC 173-303-110, "Sampling and Testing Methods", WAC 173-303-300, "General Waste Analysis", and WAC 173-303-806, "Final Facility Permits", and the *Dangerous Waste Portion of the Hanford Facility Wide Resource Conservation and Recovery Act Permit,* (Ecology 1994). Some non-dangerous constituents are also discussed in this plan if they support compliance activities or if the discussion provides a more complete description of a particular sampling strategy. The descriptions in this plan of the waste feed stored at the Hanford Site double-shell and single-shell tank system units (collectively referred to as Hanford tank waste) and the planned process streams are based on available chemical and physical information and process knowledge.

Reactor fuel reprocessing is the primary source of waste material stored in Hanford double-shell and single-shell tanks. Minor amounts of other radioactive and/or mixed waste (such as low-level and transuranic waste) are also included in the double-shell tanks; however, the tank waste is managed as high-level waste (HLW) prior to treatment and vitrification. The waste feed to the RPP-WTP will consist of staged transfers of mixed waste from the DST system unit. This waste is comprised of sludge, saltcake, and liquids, and is considered mixed waste as defined by WAC 173-303; that is, it contains both radioactive and dangerous waste.

High-level waste is defined by the US Nuclear Regulatory Commission (NRC) in the *Code of Federal Regulations* 10 CFR 72.3, as:

> "(1) the highly radioactive material resulting from the reprocessing of spent nuclear fuel, including liquid waste produced directly in reprocessing and any solid material derived from such liquid waste that contains fission products in sufficient concentrations; and (2) other highly radioactive material that the Commission, consistent with existing law, determines by rule requires permanent isolation".

Hanford tank waste is consistent with the high-level waste definition. The treatment of Hanford tank waste is required under the *Hanford Federal Facility Agreement and Consent Order* (Ecology and others 1996), signed by the Washington State Department of Ecology (Ecology), the US Environmental Protection Agency (EPA), and the US Department of Energy (DOE).

In a letter to DOE, Richland Operations Office (DOE-RL) (Paperiello 1997), the NRC documented an agreement with DOE to classify a portion of the Hanford tank waste as "incidental waste" in accordance with the incidental waste classification criteria specified in an earlier letter from the NRC to DOE (Bernero 1993). The lower activity portion of the tank waste, referred to as low-activity waste (LAW) feed, generally refers to the supernatant portion of the tank waste. Following radionuclide removal and vitrification, the immobilized low-activity waste (ILAW) will be considered incidental waste, disposed of onsite at Hanford as low-level waste, and will not be subject to the licensing authority of the NRC, consistent with the NRC incidental waste determination. The ILAW will be managed as mixed waste for disposal.

The higher activity and higher solids portion of the tank waste is designated as high-level waste (HLW) feed in this *Dangerous Waste Permit Application for the River Protection Project - Waste Treatment*

Plant (DWPA). The two different terms describing the Hanford tank waste are used because the LAW and HLW feeds are processed differently in the RPP-WTP, as described in section 2 of this WAP.

The DST system unit will provide characterization information and a split sample aliquot for each waste feed that is staged for transfer to the RPP-WTP. The RPP-WTP will perform verification analysis on the aliquot to determine if the waste feed meets RPP-WTP acceptance criteria. The RPP-WTP will also analyze confirmation samples taken from the feed receipt tanks at the RPP-WTP, to confirm that the waste feed received corresponds to the waste feed sampled while it was staged for shipment. Additional samples will be collected after pretreatment and prior to the addition of melter additives to evaluate the presence and concentrations of land disposal restrictions (LDR) constituents. Descriptions of the sampling programs are provided in section 3 of this document.

Detailed process flow diagrams of operations at the RPP-WTP are identified in Appendix 4A of this DWPA.

The following sections of this WAP describe the RPP-WTP and the procedures that will be used to identify the dangerous waste constituents of the waste feed, treated waste, and secondary wastes from the treatment processes.

2. RPP-WTP Unit Description [C-1]

The RPP-WTP is a waste treatment unit described under the unit-specific portion of the *Dangerous Waste Portion of the Hanford Facility Wide Resource Conservation and Recovery Act Permit* (Ecology 1994). Figure 2-1 presents a plan view of the RPP-WTP. This section briefly describes the RPP-WTP processes and activities. More detailed process information is provided in Chapter 4 of this DWPA.

Figure 2-2 is a simplified diagram of the treatment components showing the relationship between:

- Waste feed (LAW feed and HLW feed)
- Pretreatment
- LAW pretreatment
- LAW vitrification
- HLW vitrification

Plant equipment will include:

- Pipelines, tanks and ancillary equipment
- Ultrafiltration units
- Ion-exchange columns
- Chemical addition equipment
- LAW and HLW melters
- Service and utility units
- Container management units
- Storage facilities
- Offgas treatment systems

Tank systems will be used to:

- Receive waste and chemicals
- Provide waste feed and chemicals to other systems
- Provide interim storage
- Perform blending
- Perform evaporations
- Perform ultrafiltration

The pretreatment and vitrification of the waste feed and the management of offgas from these processes are described in the following sections. The applicability of air emissions standards to the RPP-WTP is also discussed.

2.1. Pretreatment

Pretreatment will prepare the LAW feed and the HLW feed for vitrification. An overview of the pretreatment processes is provided below and illustrated in Figure 2-2. Descriptions of the LAW and HLW feed receipt tanks and pretreatment equipment are provided in Chapter 4, section 4.2 and Appendix 4A, of this DWPA.

2.1.1. Low-Activity Waste Feed Pretreatment

Pretreatment of the LAW feed will occur in two plants: the pretreatment plant and the LAW pretreatment plant. The processes in these two plants will concentrate the LAW feed and remove cesium, strontium, technetium, transuranics (TRU) and entrained solids before vitrification. The following sections present a description of the processes in each of the two pretreatment plants.

2.1.1.1. Pretreatment Plant

Following the receipt of the LAW feed from the DST system unit, the LAW feed evaporator will concentrate the feed. This forced-circulation vacuum evaporator will concentrate the waste feed prior to the ion-exchange processes that will separate cesium and technetium. Condensate from the evaporator offgas streams will be collected and transferred to condensate tanks for discharge to the liquid effluent retention facility (LERF) or the effluent treatment facility (ETF), or both, for subsequent treatment. Non-condensable gases that are extracted from the evaporator system will be routed to the pretreatment process tank ventilation offgas treatment system. Refer to section 2.3 for a description of the pretreatment offgas treatment systems.

Following evaporation, entrained solids will be removed from the concentrated LAW feed by ultrafiltration, and washed. The entrained solids will either be incorporated into the immobilized high-level waste (IHLW), incorporated into the ILAW, or returned to the DST system unit.

For certain waste feed, strontium and TRU will be precipitated by adding reagents to the LAW feed. The precipitate will be removed from the solution by ultrafiltration. These solids containing strontium and TRU will be concentrated and washed in the ultrafiltration system before incorporation into the HLW melter feed.

The LAW feed leaving the ultrafiltration unit will pass through the cesium ion exchange system. This will consist of two sets of ion exchange columns arranged in parallel, one set operational and one on standby at any given time, and each set will consist of two columns arranged in series. The removed cesium will be concentrated and blended with HLW feed.

2.1.1.2. LAW Pretreatment Plant

Following the removal of cesium, the LAW feed will be transferred to the LAW pretreatment plant for the removal of technetium in an ion exchange system. The system will consist of two sets of ion exchange columns arranged in parallel, one set operational and one on standby at any given time, and each set will consist of two columns arranged in series.

The LAW feed leaving the technetium ion exchange units will be concentrated by evaporation. The operation of the LAW melter feed evaporator will be similar to that of the LAW feed evaporator. The concentrated technetium stream will be blended with HLW feed. Following these processes, the LAW feed will be transferred to the LAW vitrification system.

2.1.2. High-Level Waste Feed Pretreatment

After transfer of the HLW feed from the DST system unit to the RPP-WTP feed receipt tanks, it will be processed by ultrafiltration to concentrate the solids. The concentrated solids from HLW feed ultrafiltration will be washed and mixed with the following products from LAW feed pretreatment: strontium and TRU precipitate, entrained solids, and cesium and technetium ion exchange products. The resultant mixture will be transferred to the HLW vitrification system. The permeate (liquid portion) from

the ultrafiltration unit will be transferred to the LAW evaporator feed tanks and subsequently treated as LAW feed.

2.2. Vitrification Systems

After pretreatment, LAW feed will be transferred to the LAW vitrification plant and HLW feed will be transferred to the HLW vitrification plant for conversion to the immobilized glass product.

2.2.1. Low-Activity Waste Vitrification

The concentrated LAW feed from the melter feed evaporator will be combined with necessary glass-forming additives (for example, silica, alumina, boric acid and calcium silicate) and reductants, and fed into the LAW melter. The slurry of waste feed and glass-formers will be transferred to the LAW melter feed tanks in a manner to provide a continuous feed to each of the three LAW melters. The electric-powered, joule-heated LAW melters will operate in parallel. The temperature of the molten glass in the melters will be approximately 950 °C to 1,250 °C.

In the melter, the feed components will be converted to their respective oxides and dissolved in the melt, destroyed by the high temperatures, or partitioned to the offgas. As these materials are heated, superheated gases will be released into the melter offgas system. Here, most of the solids entrained in the offgas will be captured and returned to the waste feed stream for treatment. The selective catalytic reduction, catalytic oxidation and scrubber components of the offgas treatment system will treat the volatile constituents that remain in the offgas. LAW offgas treatment is discussed in section 2.3.3.

Molten glass will be discharged from the melters to metal containers for cooling, solidification, and storage. The process will yield a durable glass containing the ILAW. The glass will be cooled and the container sealed, decontaminated, and temporarily stored before being transferred to an appropriate Hanford Site treatment, storage, or disposal (TSD) unit.

2.2.2. High-Level Waste Vitrification

The HLW vitrification system will receive feed slurry from the HLW pretreatment process. The feed slurry will be combined with necessary glass-forming additives (e.g., silica, boric acid, calcium silicate, ferric oxide and lithium carbonate) and reductants, and fed to the single HLW melter. The temperature of the molten glass in the HLW melter will be approximately 950 °C to 1,250 °C.

In the melter, feed components will be converted to their respective oxides and dissolved in the melt, destroyed by the high temperatures, or partitioned to the offgas. As these materials are heated, superheated gases, including volatile feed components, will be released into the melter offgas system, where most of the solids entrained in the offgas will be captured and returned to the waste feed stream for treatment. The catalytic oxidation and scrubber components of the offgas treatment system will treat the volatile constituents that remain in the offgas. The HLW offgas treatment system is discussed in section 2.3.4.

Molten glass will be discharged from the HLW melters to metal containers for cooling, solidification, and storage. The process will yield a durable glass containing IHLW. The glass will be cooled and the container sealed, decontaminated, and temporarily stored before being transferred to the Hanford Canister Storage Building unit for storage until final disposal.

2.3. Offgas Treatment Systems

The pretreatment plant, the LAW pretreatment plant, the LAW vitrification plant, and the HLW vitrification plant will each have a dedicated offgas treatment system. These systems are described in the following sections. The pretreatment plant and LAW pretreatment plant offgas treatment systems are illustrated in Figure 2-3. The LAW and HLW vitrification plants offgas treatment systems are illustrated in Figure 2-2. Air emissions are addressed in section 2.3.5. Details regarding the offgas treatment system components are discussed in Chapter 4 of this DWPA.

2.3.1. Pretreatment Plant Offgas

The LAW and HLW feed pretreatment emissions from fluidic devices will be treated through high-efficiency mist eliminators (HEMEs) and high-efficiency particulate air (HEPA) filters, and routed to the pretreatment plant stack.

The LAW and HLW pretreatment emissions from tanks will be treated through an acid gas scrubber or a volatile organic compound (VOC) oxidation unit, depending on the treatment requirements of the offgas. The treated offgas from the scrubber and the VOC unit will be combined and treated through HEMEs, HEPA filters and carbon bed adsorbers and routed to the pretreatment plant stack, where it will be monitored and released to the atmosphere.

2.3.2. Low-Activity Waste Pretreatment Plant Offgas

LAW pretreatment plant emissions from fluidic devices will be treated through HEPA filters and carbon bed adsorbers and routed to the pretreatment plant stack.

Emissions from the LAW melter feed evaporator will be treated through a VOC oxidation unit and combined with tank emissions. This combined offgas stream will join the fluidic device offgas stream upstream of the HEPA filters and carbon bed adsorbers. The combined treated offgas from the LAW pretreatment plant will be routed to the pretreatment plant stack, where it will be monitored and released to the atmosphere.

2.3.3. Low-Activity Waste Vitrification Offgas

The LAW melter offgas treatment system will consist of the following components, as illustrated in Figure 2-2:

- Film cooler
- Submerged bed scrubber
- Wet electrostatic precipitator
- HEPA filter
- Thermal catalytic oxidation unit
- Selective catalytic reduction unit
- Caustic scrubber

The treated LAW offgas will be monitored and released through the LAW stack.

2.3.4. High-Level Waste Vitrification Offgas

The HLW melter offgas treatment system will consist of the following components, as illustrated in Figure 2-2:

- Film cooler
- Submerged bed scrubber
- Wet electrostatic precipitator
- HEME
- HEPA filter
- Caustic scrubber
- Thermal catalytic oxidation unit
- Second HEPA filter

The treated HLW offgas will be monitored and released through the HLW stack.

2.3.5. Air Emissions

Emissions from the stacks that vent the RPP-WTP processes will be monitored according to the provisions of the Hanford Site air permit, as required by WAC 173-303-395(2). Monitoring and sampling to address air emissions concerns under that permit will not be addressed in this application. However, under the Dangerous Waste Regulations (WAC 173-303), the RPP-WTP must evaluate air emissions to determine the applicability of the air emissions requirements found in 40 CFR 264, Subparts AA, BB, and CC. Details of the air emissions control systems for the RPP-WTP are provided in Chapter 4 of this DWPA.

2.3.5.1. Air Emissions from Process Vents (Subpart AA)

WAC 173-303-690 regulates process vents that are associated with distillation, fractionation, thin-film evaporation, solvent extraction, or air or steam stripping operations that manage hazardous wastes with organic concentrations of at least 10 parts per million by weight. WAC 173-303-690 incorporates the provisions of 40 CFR 264.1031 through 40 CFR 264.1036 by reference. The RPP-WTP does not employ any of these listed devices or processes; therefore, the RPP-WTP will not be subject to regulation under Subpart AA.

2.3.5.2. Air Emission Standards for Equipment Leaks (Subpart BB)

WAC 173-303-691 applies to equipment that contains or contacts hazardous wastes with organic concentrations of at least 10 percent by weight. This provision will not apply to the facility because the RPP-WTP will not accept or treat wastes with organic concentrations at or above 10 percent by weight. Compliance with this provision will be documented through analyses of verification samples, as described in section 3.2.2, and confirmation analyses, as described in section 3.2.6.

2.3.5.3. Air Emission Standards for Tanks, Impoundments and Containers (Subpart CC)

The requirements for control of emissions from tanks and containers are found in 40 CFR 264.1080 and, in general, require owners and operators to control emissions according to specified standards. There are currently no corresponding provisions in the WAC, although Ecology has proposed to adopt the provisions. Waste management units, including tank systems, that will be used for managing mixed

waste at the RPP-WTP will be exempt from the requirements of Subpart CC as provided by 40 CFR 264.1080(6) and (7). Subpart CC may apply to newly generated wastes, accumulated or stored in containers, that is designated as dangerous waste only, meaning wastes that are not mixed waste. Dangerous-only waste will be managed in accordance with the requirements of Subpart CC, as appropriate.

Figure 2-1. Plan View of RPP-WTP

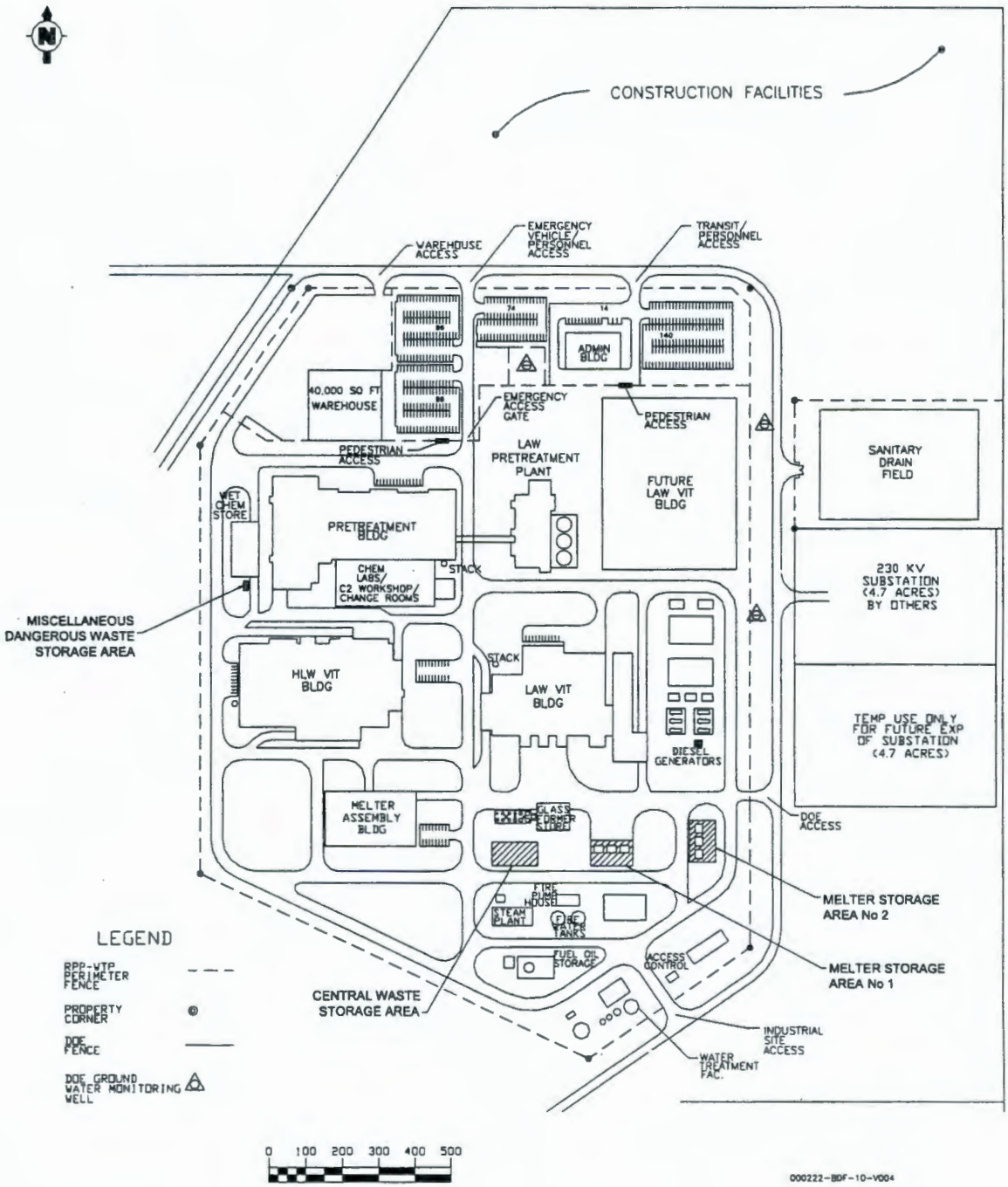

Figure 2-2. Simplified Flow Diagram and Sampling Locations

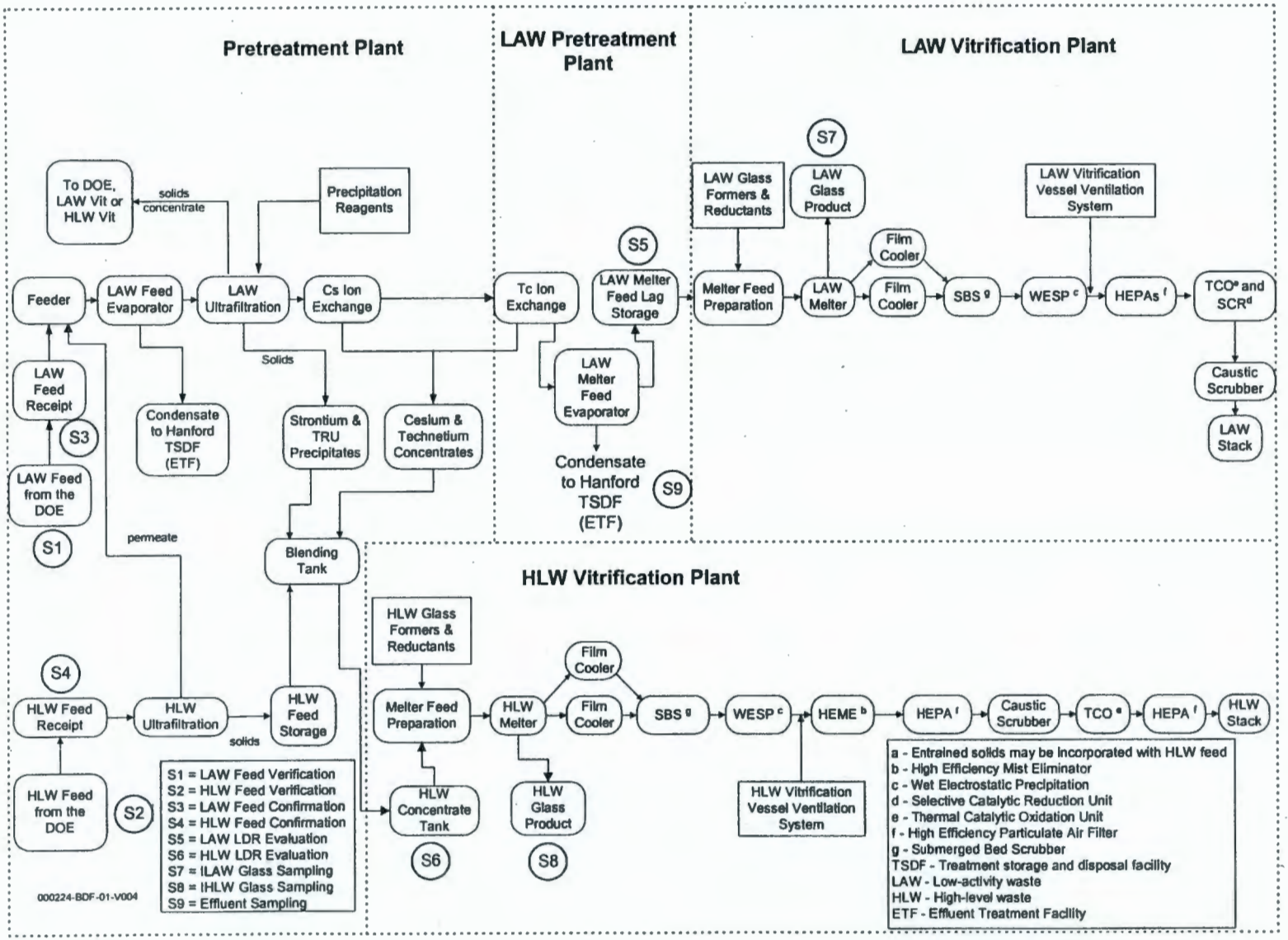

Figure 2-3. Pretreatment and LAW Pretreatment Offgas System

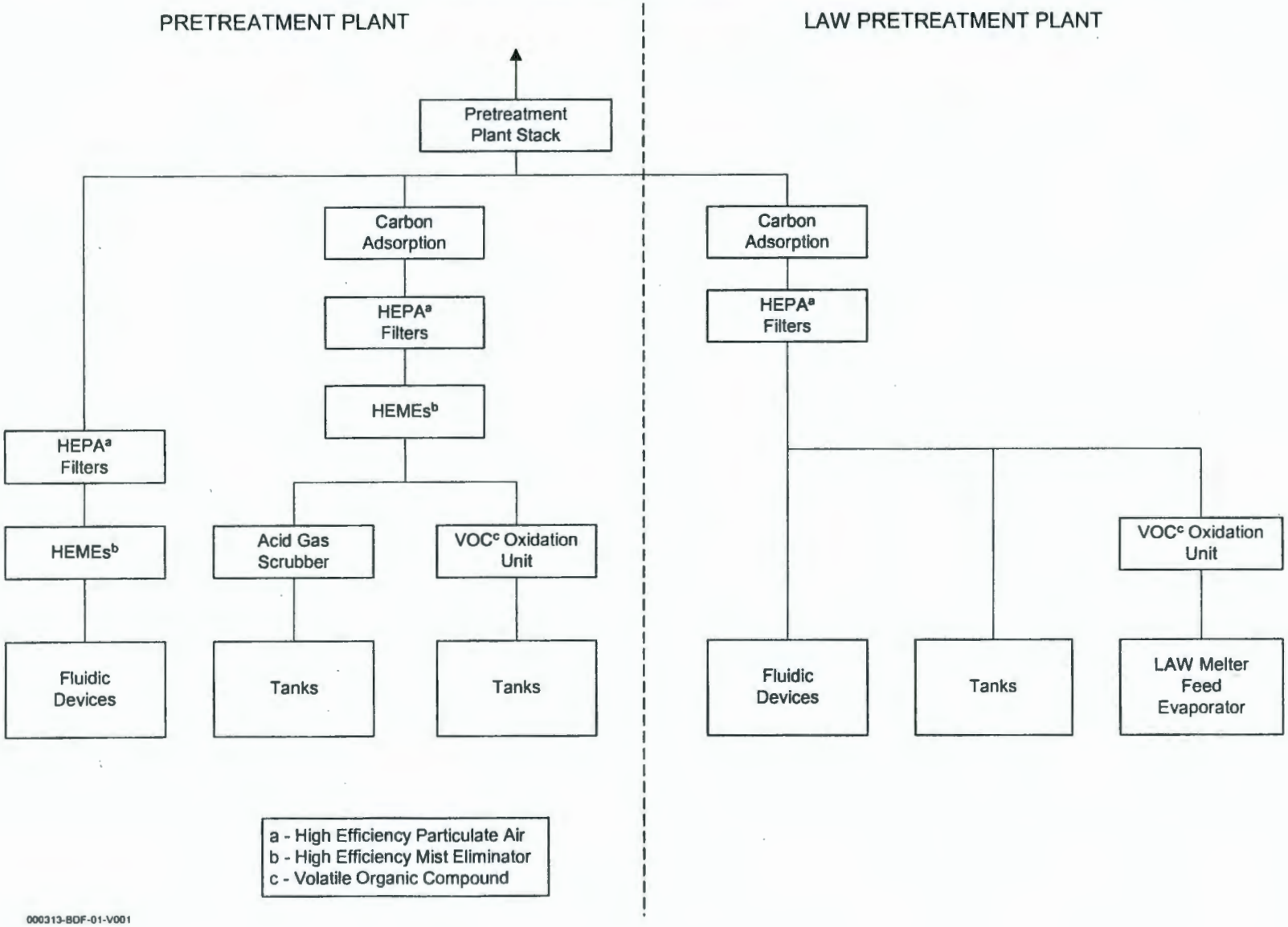

3. Waste Acceptance [C-2]

The waste feed to be transferred from the DST system unit to the RPP-WTP will undergo several stages of review before acceptance. The DST system unit will provide the RPP-WTP with characterization information for the waste feed batch staged for transfer to the RPP-WTP. The DST system unit will also provide an aliquot of the split sample of the waste feed for verification analysis performed by the RPP-WTP. During sampling and analysis for verification, the waste feed will remain within the control and responsibility of the DST system unit.

After RPP-WTP personnel determine that the verification analysis results meet the waste acceptance criteria, the DST system unit will be authorized in writing to transfer the waste feed through double-walled pipes to feed receipt tanks located inside the RPP-WTP. After transfer, the RPP-WTP will sample the receipt tanks and perform confirmation analysis to confirm that the waste feed received corresponds to the waste feed sampled while it was staged for transfer.

The steps involved in evaluating and accepting the waste feed into the RPP-WTP are summarized in Table 3-1, and are described in the following sections. Also discussed in the following sections are the rationale for the removal of dangerous waste numbers D001 (ignitable) and D003 (reactive) from the waste feed, and the selection of analytical laboratories.

3.1. Waste Description

The RPP-WTP will treat only waste transferred from the DST system unit. Waste numbers described in the *Double-Shell Tank System Dangerous Waste Part A Permit Application* (DOE-RL 1996) are potentially applicable to the waste feed. A list of these dangerous waste numbers is shown in Table 3-2. Waste feed received from the examined tanks[1] in the DST system unit is not expected to exhibit the characteristics of ignitability (D001) or reactivity (D003), based on process knowledge. Section 3.4 describes the process knowledge and additional analyses that will be used to ensure that the waste feed is not ignitable or reactive.

Table 3-2 includes multi-source leachate (F039) as a waste derived from non-specific source wastes F001 through F005. No F039 leachate is known to have been received into the DST system unit to date, as documented in the *Double-Shell Tank System Waste Analysis Plan (*LMHC 1998).

3.2. Waste Feed Acceptance Process [C-3a]

For each waste feed, the waste acceptance process is summarized in Table 3-1 and discussed in the remainder of section 3.2.

3.2.1. Waste Feed Characterization [C-2a(3)], [C-2c]

The DST system unit will provide the waste feed characterization information to the RPP-WTP before the waste feed is transferred to the RPP-WTP. Details of sampling and analyses to support waste feed

1 The examined feed tanks include: 241-AZ-101, 241-AZ-102, 241-AN-102, 241-AN-103, 241-AN-104, 241-AN-105, 241-AN-107, 241-AW-101, 241-AY-102, C-106 and C-104 (Klinger 1999). Note, tanks other than the examined feed tanks listed may be processed at RPP-WTP.

characterization are not addressed in this document because the data will be developed by the DST system unit to support its activities as a permitted facility.

The waste feed will be assigned waste numbers to identify the various constituents of the waste feed that will require treatment under the LDR of the Resource Conservation and Recovery Act of 1976 (RCRA 1976). Waste numbers will be assigned by DST system unit personnel before the feed is transferred to the RPP-WTP. Applicable hazardous and dangerous waste numbers are listed in Table 3-2.

3.2.2. Waste Feed Verification [C-2b(3)]

The DST system unit will supply a verification split sample aliquot as a representative sample of the waste feed. The methodology to be used by the DST system unit to obtain such a sample from the staging tank is outside the scope of this application. The aliquot will be analyzed for the waste acceptance criteria parameters, as listed in Table 3-3 and discussed in the following sections.

3.2.2.1. Verification Sampling and Frequency [C-2d]

The DST system unit will provide one verification split sample aliquot for each batch of waste feed transferred to the RPP-WTP. The sampling location for the LAW feed verification is identified on Figure 2-2 as sample point S1, and the sampling location for the HLW feed verification is identified as sample point S2.

Verification analyses are discussed in the following sections. Methods for selecting a laboratory and establishing laboratory quality assurance (QA) and quality control (QC) procedures are addressed in section 3.5. Detailed QC information is provided in the *Quality Assurance Project Plan for the Waste Analysis Plan* (BNFL Inc. 2000b) (QAPjP).

3.2.2.2. Verification Analysis

The waste acceptance criteria analyses that will be performed for waste feed verification are:

- Total organic carbon (TOC)
- Presence of a visible separate organic layer
- Compatibility
- pH
- Polychlorinated biphenyls (PCBs)

These waste acceptance criteria, corresponding analytical methods, and decision criteria are listed in Table 3-3 and discussed in section 3.3. The analytical results will be evaluated against the decision criteria listed in Table 3-3, as discussed in the following section.

3.2.2.3. Verification Data Evaluation

The verification analytical data will be evaluated against the waste acceptance criteria summarized in Table 3-3. The decision criteria are divided into those with quantitative decision limits and those with qualitative decision limits. Hypothesis testing with a confidence level of 95 percent will be used to support decisions on criteria relating to specific quantitative numbers. The exception is PCBs, since these have a fixed decision criterion of less than 50 parts per million.

The null hypothesis for the decision will be that the waste feed exceeds the waste acceptance criteria. If the null hypothesis is accepted based on the data from the verification or confirmation samples, additional evaluation of the data and, potentially, additional analysis of the waste feed may be performed. Should the data continue to support acceptance of the null hypothesis, the DST system unit will be notified that the waste feed does not conform. Action in response to non-conformance is addressed in section 3.2.5.

The waste feed will be deemed to meet the waste acceptance criteria and will be accepted for treatment by the RPP-WTP if the null hypothesis is rejected (concluding that the waste feed does not exceed the waste acceptance criteria).

The qualitative waste acceptance criteria for viscosity change will be compared with the decision criteria in Table 3-3.

3.2.3. Waste Feed Profile [C-2b]

The DST system unit will complete a profile of the waste feed before transferring it to the RPP-WTP. The content and format of the profile will be established prior to the transfer of waste feed. An example of the information that will be provided in the profile is:

- General information, such as the identification of the DST tank from which the transfer will be made and the date of the proposed transfer
- Physical properties of the waste feed, such as the proposed volume of the transfer and the presence or absence of a separate visible layer
- Appropriate analytical results, such as TOC
- Dangerous waste information, such as characterization and the designation of dangerous waste numbers
- LDR information

3.2.4. Preshipment Review

The purpose of the preshipment review is to evaluate the information provided by the DST system unit and the verification analysis results, to ensure compatibility and acceptability of the waste feed before it enters the RPP-WTP. Following successful completion of the preshipment review, the RPP-WTP will notify the DST system unit in writing that it is ready for a waste feed transfer. The two parties will agree on the waste feed transfer date and any other pertinent information. Actions to address non-conformant waste feed are discussed in the following section.

3.2.5. Non-Conformance Action [C-3c]

Confirmatory action, such as re-analysis and data review, will be performed if the verification analytical results do not initially meet the decision criteria presented in Table 3-3. Non-conforming waste feed that does not meet the decision criteria for TOC, visible separate organic layer, or PCBs will be refused for delivery. If waste feed does not conform on the basis of incompatibility or pH, the RPP-WTP will determine and execute actions necessary to be able to receive the waste feed. Non-conformance actions for incompatibility may include assessing whether an increase in viscosity will adversely affect the ability to pump the waste feed, and the possible removal of residual waste feed from the feed receipt tanks.

Non-conformance on the basis of pH is unlikely since the DST system unit tanks are maintained at above pH 7 for corrosion control (LMHC 1998). Should non-conformance occur on the basis of pH, representatives from the RPP-WTP and the DST system unit will coordinate a resolution. The logic, corrective actions, data and the names and titles of the individuals making these decisions that are part of non-conformance actions will be assembled and retained as a QA record document, according to procedures described in the WAP QAPjP (BNFL 2000b).

3.2.6. Waste Feed Confirmation [C-2b(1)]

Once the waste feed has been received into the feed receipt tanks, the RPP-WTP will sample and analyze the feed. Confirmation analyses are presented in Table 3-3. Compatibility testing will not be performed on the confirmation sample, since waste streams will already be combined in the feed receipt tanks. Confirmation will ensure that the verification analyses accurately represented the batch of waste feed that was received into the RPP-WTP feed receipt tanks, and that the feed can be managed within the RPP-WTP in accordance with the requirements of WAC 173-303-300(1) "General Waste Analysis". The details of the confirmation process are presented in the following sections.

3.2.6.1. Confirmation Sampling and Frequency [C-2d], Representative Sampling Methods [C-2b(3)], [C-2c]

LAW and HLW feed will be transferred from a DST system unit staging tank to respective LAW or HLW feed receipt tanks located within the RPP-WTP. Grab samples will be collected and analyzed from each of the feed receipt tanks that receive DST feed. The location of the LAW feed confirmation sampling is identified as sample point S3 on Figure 2-2, and the location of the HLW feed confirmation sampling is identified as sample point S4. The volume of each sample is approximately 60 to 70 milliliters.

The LAW and HLW feed receipt tanks will be maintained at a slight negative pressure and vented to the tank ventilation system. The tanks will be agitated prior to sampling to ensure representative sampling of the waste feed.

The sampling will be performed by a computer-controlled autosampler system. A clean sample vial is pneumatically transferred to the autosampler unit, where the vial is mounted on a sample needle through the vial septum. The other end of the sample needle penetrates a sample loop that is circulated by a reverse flow diverter. A venturi effect on the sample needle creates a slight negative pressure in the sample vial, as the diverter circulates the waste through the sample loop. When the flow in the sample loop slows to a stop, the venturi effect ceases and waste is drawn into the sample vial. The vial is withdrawn from the needle after the appropriate sample volume is collected, placed in a carrier and pneumatically transferred to a shielded sampling cabinet in the laboratory for sample preparation and analysis. The autosampler is illustrated in Figure 3-1. Although autosampling is preferred, manual sampling may be used. Figure 3-2 illustrates a manual sampling cabinet.

Disposable sampling equipment will eliminate the need for equipment decontamination after use. If the use of disposable equipment is not practical, the sampling equipment will be decontaminated before and following each sample event.

Methods and equipment selected for use will meet the applicable requirements of the specific SW-846 (EPA 1997a) or other appropriate sampling or analysis procedure being conducted, as discussed in the QAPjP (BNFL 2000b). Modifications of a procedure, other than sample size, will be requested in accordance with WAC 173-303-110, if required.

3.2.6.2. Sample Preservation, Storage and Holding Times

Sample preservation, storage, and holding times are discussed in the QAPjP (BNFL 2000b). No specific SW-846 (EPA 1997a) method limitations are expected beyond sample size reductions.

3.2.6.3. Establishing QA/QC Procedures for Sampling [C-2a(2)(b)]

A QA plan has been developed to provide control over activities affecting the quality of analytical data relating to the WAP. The QAPjP (BNFL 2000b) will be supplemented by standard operating procedures that will be developed for specific data collection efforts.

Sampling procedures, equipment, and sample preservation and handling requirements are discussed in the QAPjP (BNFL 2000b). Policies and procedures commensurate with the complexity and importance of data will be developed and implemented.

Equipment, instrumentation, and supplies at the sampling site will be identified in written procedures that will be developed to accomplish the activities planned. The procedures will typically include the following information:

- Sampling equipment
- Sample management
- Reagent and standard preparation
- Decontamination equipment
- Sample collection
- Field measurements
- Equipment calibration and maintenance
- Corrective action
- Data reduction and validation
- Reporting
- Generation, control and disposal of records

The QAPjP (BNFL 2000b) will describe how the following elements of the QC program will be implemented:

- Sample control
- Analyses
- Deviation
- Corrective action
- Data handling
- QA/QC measures of precision, accuracy and representativeness

The QA organization will conduct reviews consisting of internal and external assessments to assure that QA/QC procedures are in use and to assure that field staff conform to these procedures. QA reviews will be conducted as deemed appropriate and necessary, but at least annually.

3.2.6.4. Confirmation Analysis

Confirmation analyses, analytical methods and detection limits are the same as for the verification analysis (except that compatibility analysis is not performed on the confirmation samples) and are listed in Table 3-3. Confirmation analysis methods are described in section 3.3.

3.3. Waste Acceptance Criteria [(C-2a)], [C-2a(1)], [C-2a(2)(a)], [C-2b(1)], and [C-2b(2)]

Any method allowed in the most recent version of SW-846 (EPA 1997a) that is applicable to the analytes listed in Table 3-3 will be accepted for sample preparation and analysis, or another method which yields equivalent accuracy. Table 3-3 presents the currently-selected SW-846 preparation and analysis methods and the acceptance criteria that will be applied to the waste feed, to verify that it is acceptable for treatment by the RPP-WTP. If modifications to a procedure are needed, they will be requested in accordance with WAC 173-303-110. Specific technical guidance for modification of SW-846 methods will be obtained from *Guidance on Testing Requirements* (NRC, EPA 1997), *Preparation of Radioactive Mixed Waste Samples* (ASTM 1990), *Methods of Chemical Analysis* (PNL 1993), as well as recent publications (for example, Mong and others 1997). SW-846 (EPA 1997a) "Method Hotline" indicates that sample size is not a method modification unless detection limits are not sufficient for making decisions.

3.3.1. Organics

The RPP-WTP has established specific limits for organic content in the waste feed. The RPP-WTP will analyze the DST split sample to evaluate the TOC of the waste feed and check for the presence of a visible separate organic layer. These two criteria and associated test methods are discussed in the following sections.

3.3.1.1. Total Organic Carbon

TOC has been chosen for analysis of the waste feed to ensure that the RPP-WTP is not required to comply with Subpart BB of RCRA Part 264 (RCRA 1976) or WAC 173-303-691. SW-846 Method 9060 (EPA 1997a) and EPA Method 415.2 (EPA 1997b), using persulfate oxidation, will be used for the analysis. This method typically measures TOC to levels of about one part per million. The decision level for this verification process is 10 percent, or 100,000 parts per million TOC. The volume requirements for this analysis are expected to be less than one milliliter. In order to preserve the sample in accordance with Method 9060 (EPA 1997a), the waste feed sample will be diluted from one part per hundred to one part per thousand in water, with enough sulfuric acid added to maintain the pH at less than two. The dilution will be done because of the high alkalinity and the need to acidify for preservation. Even with the dilution, Method 9060 will meet the 10,000 parts per million detection limit as given in Table 3-3.

If any TOC sample (approximately one milliliter of liquid) contains more than 0.1 gram solids, the liquid sample will be decanted, diluted, and preserved. The solids will be analyzed separately for TOC and will not be acidified or diluted.

3.3.1.2. Visible Separate Organic Layer

A determination that there is no visible separate organic layer will be performed. A 15 milliliter aliquot of the homogenized waste feed sample will be placed into a 25 milliliter glass test tube and allowed to sit undisturbed for one hour. At the end of the hour, the sample will be observed for the presence of a visible separate layer. If a separate layer is observed, it will be aspirated from the test tube and subjected to a gross screening analysis, such as for TOC, to establish whether the separate layer is organic. If the analysis determines that the visible separate layer is not organic or if the observed layer is less than the limit given in the acceptance criteria, then the waste feed will be accepted into the RPP-WTP for processing. Table 3-3 presents the acceptance criteria.

3.3.2. Incompatible Waste

The LAW and HLW waste feeds will be evaluated for compatibility with the residual aqueous waste in the RPP-WTP feed receipt tanks, before being accepted into their respective feed receipt tanks. These evaluations will focus on the potential for an aqueous waste to react in an uncontrolled fashion with another waste (40 CFR 264, Appendix, "Examples of Potentially Incompatible Wastes"). Although problems associated with commingling aqueous waste feed are not expected, this evaluation will confirm the compatibility of two or more aqueous waste feeds from different DST system unit tanks.

Waste feed compatibility will be evaluated using the American Society for Testing and Materials Method D5058-90 (ASTM 1990). This provides three test methods to determine compatibility. Test method A, using a reduced sample volume, will be applied to the waste feed. This method prescribes the mixing of aliquots of the two waste feeds and an evaluation of any temperature change of the mixture. The method also calls for a visual examination to determine whether viscosity has increased. These are the only evaluations that will be performed, since these test for the potential incompatibilities that could adversely affect the management of the waste in the RPP-WTP.

The recommended sample volume for this test method is 150 to 300 milliliters. The sample size will be decreased to 10 milliliters from each waste feed source, for a total of 20 milliliters of the combined waste feeds for waste minimization and to comply with the as low as reasonably achievable (ALARA) philosophy.

All aqueous waste feed will be managed in a way that will preclude adverse reaction or interference with the RPP-WTP treatment process.

3.3.3. Waste Feed pH

The measurement of pH will ensure that a batch of waste feed is compatible with the RPP-WTP materials of construction and treatment processes. SW-846 Method 9040 (EPA 1997a) will be used to measure pH. The decision criterion is greater than pH 7, as presented in Table 3-3.

3.3.4. Polychlorinated Biphenyls

PCBs that may be present in the waste feed are not expected to be regulated under the Toxic Substances Control Act of 1976 (TSCA). The LAW and HLW waste feeds verification sample aliquots will be analyzed to ensure that the waste feed contains less than 50 parts per million PCBs and is therefore not regulated under TSCA.

The sample will be separated into solid and liquid phases. Rapid screening field tests such as SW-846 Method 4020, "Screening for Polychlorinated Biphenyls by Immunoassay" (EPA 1997a), will be evaluated for possible use. The evaluation will be made against SW-846 Method 8082 (EPA 1997a), which analyzes for PCBs by gas chromatography. If the field screening tests do not prove viable, the sample will be analyzed for PCBs by Method 8082.

If SW-846 Method 8082 (EPA 1997a) is used, modifications of the basic extraction procedure are expected to be needed, to decrease the sample size and allow the extraction to be performed in a shielded glove box. It is anticipated that a sample size of 0.5 to one gram would be required for solids, or 10 to 20 milliliters for liquids. If any single liquid sample contains more than five percent solids after centrifuging, the liquid and solid will be analyzed separately. Refer to Table 3-3 for the decision criteria.

3.4. Waste Feed Designation

The RPP-WTP will treat only waste transferred from the DST system unit. Waste numbers described in the *Double-Shell Tank System Dangerous Waste Part A Permit Application* (DOE-RL 1996a) are potentially applicable to the waste feed. These dangerous waste numbers are listed in Table 3-2.

Waste feed will carry the numbers for ignitable (D001) and reactive (D003) waste. However, based on past process knowledge, which includes the age, temperature, history, and chemical composition of the waste feed stored in the DST system unit, it is not expected to be ignitable or reactive. After the waste feed has been received into the RPP-WTP, this process knowledge will be used to remove the dangerous waste number for ignitability, as discussed in section 3.4.1. Process knowledge and analyses for cyanide and sulfide will be used to remove the dangerous waste numbers for reactivity, as discussed in section 3.4.2.

The waste compatibility test, as described in section 3.3.2, will also provide information on potential reactivity between waste feeds. Any precautions taken to prevent accidental ignition or reaction of ignitable or reactive waste will be in accordance with WAC 173-303-395(1)(a) through (d), and will be documented in the RPP-WTP operating record in accordance with WAC 173-303-395(1)(c) "Other General Requirements", as discussed in the QAPjP (BNFL 2000b).

3.4.1. Ignitable Waste

Four definitions found at WAC 173-303-090(5)(a) are used to determine whether a waste exhibits the characteristic of ignitability. The section (ii) definition pertains to solid material and section (iii) to compressed gas, and these two definitions do not apply to the waste feed to be processed at the RPP-WTP. The remaining two definitions are each discussed below.

WAC 173-303-090(5)(a)(i) states, in part: "It is a liquid, other than an aqueous solution containing less than 24 percent alcohol by volume, and has a flash point less than 60 °C (140 °F)." An EPA document, *Alcohol-Content Exclusion for the Ignitability Characteristic* (EPA 1992a), provides guidance on the application of this definition. An aqueous solution containing less than 24 percent alcohol by volume, that is at least 50 percent water by weight, including solutions that contain non-alcohol components, is excluded from the flash point requirement. The DST system unit waste feed is less than 24 percent alcohol since it is limited to no more than 10 percent TOC by analysis, and consists of approximately 80 percent water. Therefore, this waste feed is excluded from flash point requirements.

WAC 173-303-090(5)(a)(iv) states: "It is an oxidizer, if it is defined as such in 49 CFR 173.127 and 173.128." In addition, according to the Department of Transportation regulations in 49 CFR, subchapter 173.127(a), oxidizer "means a material that may, generally by yielding oxygen, cause or enhance the combustion of other materials".

The *Tank Waste Remediation System Final Safety Analysis Report* (SAR) (DOE-RL 1999) concludes that only under extreme conditions could the organic nitrate salt mixture in the waste feed support combustion. The report indicates that this condition could exist only in a situation where the waste feed has been dried to essentially a zero water condition, there is a sufficient amount of organic fuel in the waste feed to support the reaction, and there is some external source of ignition. Because the waste feed in the RPP-WTP generally will consist of more than 80 percent water, the necessary conditions for the reactions discussed above will not exist in the RPP-WTP. In addition, the TOC content of the waste feed will be limited to no more than 10 percent. Data in the SAR show that unless the water content of the waste feed were allowed to drop below 20 percent, no level of organic fuel in the waste feed could

support a combustion reaction. Therefore, the DST system unit waste feed does not meet the Department of Transportation definition of an oxidizer.

Based upon the previous discussions of process knowledge, the dangerous waste number D001 for ignitability will be removed from the waste feed after it is received into the RPP-WTP.

3.4.2. Reactive Waste

WAC 173-303-090(7)(a) states:

> "A solid waste exhibits the characteristic of reactivity if a representative sample of the waste has any of the following properties:
>
> (i) It is normally unstable and readily undergoes violent change without detonating;
>
> (ii) It reacts violently with water;
>
> (iii) It forms explosive mixtures with water;
>
> (iv) When mixed with water, it generates toxic gases, vapors or fumes in a quantity sufficient to present a danger to human health or the environment;
>
> (v) It is a cyanide or sulfide bearing waste which, when exposed to pH conditions between 2 and 12.5, can generate toxic gases, vapors or fumes in a quantity sufficient to present a danger to human health or the environment;
>
> (vi) It is capable of detonation or explosive reaction if it is subjected to a strong initiating source or if heated under confinement;
>
> (vii) It is readily capable of detonation or explosive decomposition or reaction at standard temperatures and pressure; or
>
> (viii) It is a forbidden explosive as defined in 49 CFR 173.54, or a Class 1 explosive, Division 1.1, Division 1.2, Division 1.3, and Division 1.5, as defined in 49 CFR 173.50."

Each of these eight definitions of a reactive waste is discussed in the following paragraphs.

Definitions (i), (vi), (vii) and (viii) relate to waste that will undergo violent change, detonation or explosion. The DST aqueous waste feed does not have these properties (see section 3.4.1 above).

Definitions (ii), (iii) and (iv) involve waste that, when mixed with water, produces hazardous reactions or generates toxic gases, vapors or fumes. Since the waste feed is approximately 80 percent water, it does not meet the definitions that: (ii) "It reacts violently with water;" (iii) "It forms explosive mixtures with water;" or (iv) "When mixed with water, it generates toxic gases, vapors or fumes in a quantity sufficient to present a danger to human health or the environment". Water is routinely mixed with the waste during line flushing after waste transfer.

Hydrogen gas is generated in the DST system unit tanks, due primarily to the radiological action on the organic material in the waste. Hydrogen, although flammable, is not a toxic gas and therefore the waste

does not meet definition (iv) "When mixed with water, it generates toxic gases, vapors or fumes in a quantity sufficient to present a danger to human health or the environment".

Definition (v) concerns the generation of toxic gases, vapors, or fumes when a cyanide or sulfide-bearing waste is exposed to pH conditions between 2 and 12.5. At issue is the generation of hydrogen cyanide and hydrogen sulfide toxic gases at acidic pH conditions "in a quantity sufficient to present a danger to human health or the environment". To ensure that this definition is not met, the confirmation sample will be analyzed for hydrogen cyanide gas generation using SW-846 method 9014 (EPA 1997a) and for hydrogen sulfide gas generation using SW-846 method 9034. The sampling points are identified on Figure 2-2 as S3 for LAW feed and S4 for HLW feed. Sampling and analytical methods and decision criteria are presented in Table 3-4. These tests will be used for waste determination, even though the EPA has recently withdrawn the guidance levels for hydrogen cyanide and hydrogen sulfide generation (EPA 1990), since these methods are still recognized by Ecology.

The RPP-WTP will remove the dangerous waste number D003 for reactivity from the waste feed, provided the analytical results are below the decision level given in Table 3-4.

3.5. Analytical Laboratories

3.5.1. RPP-WTP Analytical Laboratory

The RPP-WTP will establish and operate an on-site analytical laboratory. A laboratory QA program meeting the requirements of SW-846, Chapter 1, section 4.4 (EPA 1997a), will be prepared before initiation of laboratory operations. Waste analyses will be performed in accordance with the procedures discussed in the QAPjP (BNFL 2000b).

3.5.2. Selecting Other Analytical Laboratories

The RPP-WTP will contract with other Hanford Site laboratories to provide analytical services as necessary. Laboratories will either be operated by BNFL Inc. or contracted to supply analytical services, based on a review of their ability to provide acceptable data for the types of waste handled by the RPP-WTP. The review will include an onsite surveillance of the laboratory facilities, and a review of its documentation. Evaluation of candidate laboratories will be based on the following criteria:

- Licenses or permits issued by the applicable government authority, allowing the laboratory to handle waste samples that contain chemical and radiological components
- Analytical capacity, including number and type of analytical instruments, sample preparation facilities, and sufficient uncommitted capacity, or a commitment to procure sufficient capacity to handle the sample load
- Adequate number of qualified technical staff
- Demonstrated history of performing acceptable analyses
- A demonstrated QA program that meets the requirements of SW-846, Chapter 1, section 4.4 (EPA 1997a)

3.5.3. Establishing Quality Assurance/Quality Control Procedures For Laboratory Analysis

The RPP-WTP laboratory will conduct its operation in a way that ensures that reliable information is provided on request. The policies and procedures described in the QAPjP (BNFL 2000b) will be implemented to ensure reliable data.

Laboratory equipment and instrumentation will meet the requirements and specifications of the test methods and other procedures described in the QAPjP (BNFL 2000b).

The QAPjP (BNFL 2000b) will describe or refer to all laboratory activities that may affect data quality. Any deviation from an established procedure during a data collection activity will be documented. QC procedures will be available for the indicated activities as described in the QAPjP (BNFL 2000b).

The QA organization will conduct reviews consisting of internal and external assessments, to assure that QA/QC procedures are in use and that laboratory staff conforms to these procedures. QA reviews will be conducted as deemed appropriate and necessary, but at least annually. Non-conformances will be documented.

Table 3-1. Summary of the Waste Feed Acceptance Process [C-3a]

Step	Action
1	The DST system unit submits characterization information and a split sample aliquot of the waste feed to RPP-WTP for waste verification analyses, as described in sections 3.2.1 and 3.2.2 of this document.
2	Waste verification analyses are performed as described in section 3.2.2. A laboratory under RPP-WTP management or contractual control performs the testing, as described in section 3.5.
3	The DST system unit submits a completed waste profile for the waste feed to the RPP-WTP before transfer of either LAW or HLW waste feed to RPP-WTP, as described in section 3.2.3.
4	Qualified RPP-WTP personnel perform a preshipment review of the verification analytical results for conformance to waste acceptance criteria, as discussed in section 3.2.4.
5	The RPP-WTP authorizes transfer if the waste verification analyses meet the acceptance criteria. If the waste verification analyses do not meet the criteria, data are reviewed again. The transfer is not authorized if data do not meet criteria after the second review, or until after corrective action has been completed, as discussed in section 3.2.5.
6	The DST system unit schedules the transfer with the RPP-WTP if the waste feed is accepted for transfer.
7	Once waste feed is transferred to RPP-WTP, the RPP-WTP performs waste confirmation sampling and analyses, as described in sections 3.2.6.
8	The RPP-WTP evaluates the confirmation data against the verification data to confirm that the waste received is the same as the waste accepted for transfer, as described in section 3.2.6.

Table 3-2. Summary of Dangerous Waste Numbers for RPP-WTP

Characteristic Waste Numbers				Listed Waste Numbers		
D001	D002	D003	D004	F001	F002	F003
D005	D006	D007	D008	F004	F005	F039[a]
D009	D010	D011	D018			
D019	D022	D028	D029			
D030	D033	D034	D035			
D036	D038	D039	D040			
D041	D043	WT01[b]	WT02[b]			
WP01[b]	WP02[b]					

[a] Multi-source leachate (F039) is included as a waste derived from non-specific source wastes F001 through F005.

[b]Washington State criteria

Table 3-3. Waste Feed Analysis, Decision Criteria and Non-Conformance Actions [C-2a(2)], [C-2b(2)]

Parameter	Analytical Method[a]	Estimated Sample Volume[b]	Required Detection Limit[e]	Decision Criteria	Non-Conformance Actions
Total organic carbon using persulfate oxidation method	SW-846, Method 9060 and EPA Method 415.2[(d)]	1 mL liquid or 0.1 g solid	10,000 ppm[c]	TOC < 100,000 ppm = < 10%	Reject waste feed
No separate organic layer	Visual	15 mL	2 mm layer	No layer > 2 mm	Reject waste feed
Compatibility	ASTM D5058-90	10 mL	Temperature Change = 0.5 °C. Qualitative estimate of viscosity change	Acceptable temperature change < +/- 20 °C, No viscosity change adversely affecting waste processing.	Corrective actions to eliminate incompatible conditions
pH	pH meter (SW-846, Method 9040)	pH = 5 mL	pH units 0.1	Acceptable pH range >7	Corrective actions to correct pH
PCBs	GC SW-846 Method 8082 or immunoassay (SW-846 Method 4020)	10 to 20 mL liquid or 0.5 g solid	5 ppm	PCBs < 50 ppm	Reject waste feed

[a] SW-846 Method (EPA 1997a) unless specified otherwise.

[b] Sample volume needed for each analysis. Organic layer, pH, and compatibility can all be performed from the same sample if performed sequentially.

[c] 10 percent total organic carbon = 100,000 parts per million.

[d] EPA Method 415.2 (EPA 1997b).

[e] The laboratory will determine method detection limits and estimated quantitation limits per SW-846 Chapter 1.

GC = gas chromatography

parts per million = milligrams per liter or milligrams per kilogram (approximate)

Table 3-4. Analysis for the Determination of Reactive Waste[a] [C-2a(2)]

Parameter	Sample Type	Sample Volume	Analytical Method	EPA Guidance Level
Reactive cyanide	Grab	10 grams	SW-846, Method 9014[b]	250 mg HCN/kg waste
Reactive sulfide	Grab	10 grams	SW-846, Method 9034[c]	500 mg H_2S/kg waste

[a] The EPA has withdrawn these analyses; however, Ecology continues to accept these methods.
[b] Sample preparation and the evolution of hydrogen cyanide is given in SW-846, Chapter 7, section 7.3.3 (EPA 1997a). Method 9014 is the hydrogen cyanide detection method.
[c] Sample preparation and the evolution of hydrogen sulfide is given in SW-846, Chapter 7, section 7.7.3.4. Method 9034 is the hydrogen sulfide detection method.

Figure 3-1. Example Auto Sampler

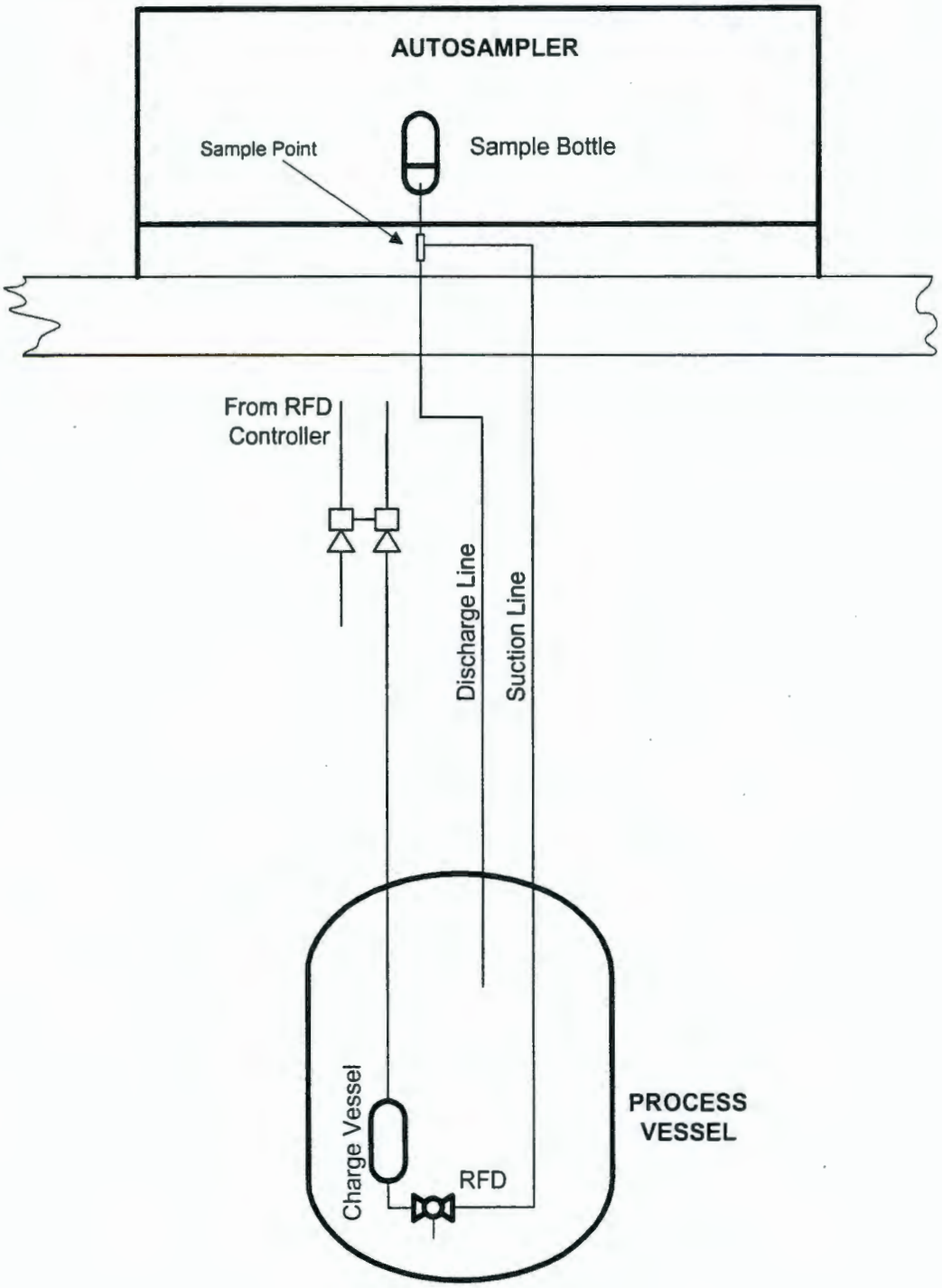

RFD = reverse flow diverter

Figure 3-2. Example Manual Sampler Flow Path and Proposed "High Integrity" Sampling Cabinet

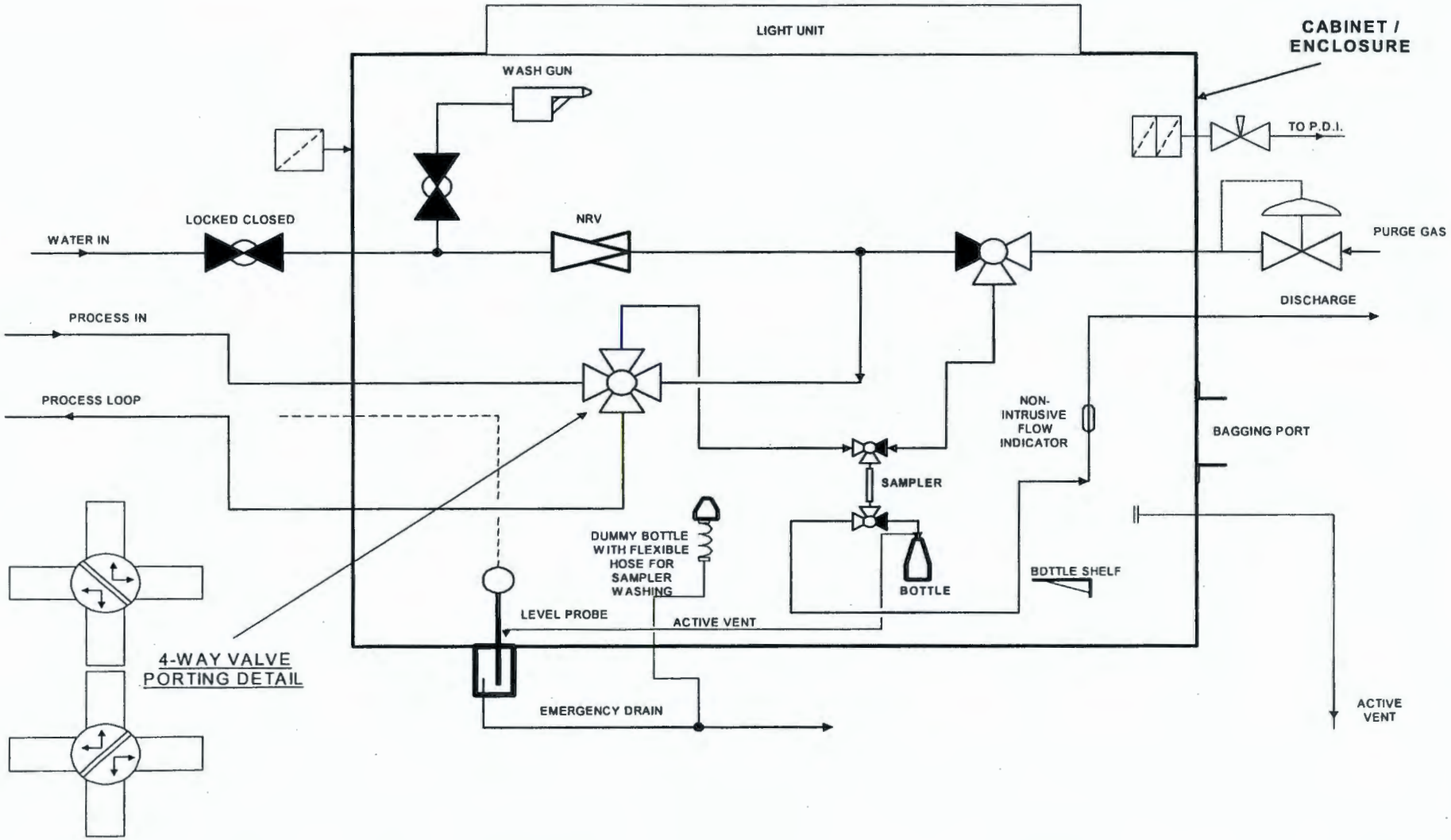

4. RPP-WTP Waste Streams [C-2]

In addition to the vitrified glass product, the pretreatment processes and the LAW and HLW vitrification processes will generate a variety of solid, liquid and gaseous waste streams. Some of these waste streams include waste derived from the incoming feed from the DST system unit. Other wastes include spent materials used in processing the waste feed, such as rinsate and scrubber solutions that come into contact with the waste feed or its derivatives, and contaminated equipment. General facility operations and maintenance activities are also a source of dangerous waste generation.

Waste streams regulated under WAC 173-303 because of dangerous waste concerns include the ILAW and IHLW, dangerous waste air emissions, and miscellaneous secondary solid and liquid waste streams. Air emissions subject to regulation under Subpart AA, BB, and CC are discussed in section 2.3.5. All other regulated air emissions are addressed under the permit applications to be developed under the Clean Air Act of 1990 and the Washington Clean Air Act of 1967 as amended, and are not included in the following discussions.

Section 4.1 describes the LDR evaluation for the immobilized waste streams and associated sampling and analysis activities. Section 4.2 describes the secondary waste streams at RPP-WTP, the associated sampling and analysis activities, and the ultimate treatment, storage, or disposal of the waste.

4.1. LDR Evaluation for Immobilized Waste [C-2a], [C-2a(1)]

This section describes the approach for addressing the LDR program requirements applicable to ILAW and IHLW. The approach includes discussions of sampling the LAW and HLW feed before vitrification. The results are used to determine whether sampling of the glass will be required.

4.1.1. LDR Evaluation Approach

For LDR evaluation, the LAW and HLW feeds will be sampled and analyzed after pretreatment and prior to the addition of glass formers for vitrification. This analysis will allow the RPP-WTP to determine which LDR-regulated constituents are present in the waste feed that potentially require verification of proper treatment. The samples will be analyzed for the applicable toxicity characteristic (TC) organic compounds. Sampling and analysis of the LAW and HLW feed for LDR evaluation are described in section 4.1.2.

If the concentration of an applicable TC organic compound in a LAW or HLW feed sample exceeds the TC limit, the glass produced from that tank will be sampled and analyzed for the inorganic underlying hazardous constituents (UHCs) that are not covered by the best demonstrated available technology (BDAT), which in this case is high-level vitrification (HLVIT). The glass will not be analyzed for organic compounds, since they are destroyed or removed in the vitrification process (EPA 1992b). The concentrations of the applicable UHCs in the glass will be compared with universal treatment standard limits. The details of the evaluation are presented in the following sections.

4.1.1.1. Basis for Approach

The LDR sampling approach will be based on the following:

- HLVIT is the BDAT applicable to specific characteristic inorganics in both the LAW and HLW feed from the DST system unit. This approach has been discussed in meetings with EPA and Ecology

(Ecology 1999), and it was agreed that HLVIT applies to both LAW and HLW. LDR regulations indicate that HLVIT is the BDAT for waste numbers D002 (corrosivity) and D004-11 (characteristic metals) in accordance with 40 CFR 268.40 and 268.42. In addition, HLVIT will be considered to meet the treatment requirements for state-only criteria waste, WT01, WT02, WP01 and WP02 (Ecology 1999). Thus, the ILAW and IHLW will meet LDR for D002, D004-11, WT01, WT02, WP01, and WP02, based on the HLVIT treatment standard.

- Volatile and semivolatile organics, including organic UHCs, will not be present in the ILAW and IHLW. The EPA's handbook, *Vitrification Technologies for Treatment of Hazardous and Radioactive Waste* (EPA 1992b), provides general information on organic destruction that supports 99.99 to 99.9999 percent destruction and removal efficiency of organics for vitrification.

- The RPP-WTP will determine the applicability of LDR requirements for UHCs by analyzing relevant TC organic compounds from the waste feed tank, after pretreatment and before vitrification. If the results of the analysis indicate that the waste feed is below TC limits for the applicable TC organic compounds, then the resultant glass from that tank (ILAW or IHLW) will meet LDR requirements, and glass sampling and analysis will not be performed. Should the sample from the waste feed tank fail for an applicable TC organic compound, then the resultant glass from that tank will be analyzed for the UHCs that are not included in the HLVIT BDAT. These inorganic UHCs are antimony, beryllium, thallium, nickel, and total and amenable cyanides.

Organic TC compounds will not be analyzed in the glass since they are destroyed or removed in the vitrification process (EPA 1992b), as discussed above.

Figure 4-1 summarizes the previously discussed logic.

4.1.2. Waste Feed Sampling Location, Frequency and Method [C-2d]

The LAW and HLW feed samples for LDR evaluation will be taken at the locations and frequencies described in section 4.1.2.1 and section 4.1.2.2, respectively. The same sampling method will be used for both the LAW feed and the HLW feed. The sampling method is presented in section 4.1.2.3.

4.1.2.1. LAW Sampling Location and Frequency [C-2b(3)]

The LAW feed sample for LDR evaluation will be taken from the LAW feed lag storage tank. Figure 2-2 identifies the LAW feed lag storage tank sampling point as S5. The tank will be mixed and sampled each time the tank if filled. The frequency of sampling may be reduced as process experience is gained.

4.1.2.2. HLW Sampling Location and Frequency [C-2b(3)]

The HLW feed sample for LDR evaluation will be taken from the HLW concentrate tank. Figure 2-2 shows the location of the sampling point as S6. The tank will be mixed and sampled each time the tank is filled. The frequency of sampling may be reduced as process experience is gained.

4.1.2.3. Sampling Method [C-2c]

Both the LAW feed and the HLW feed LDR evaluation samples will be collected by an automated sampling system described in section 3.2.6.1 and illustrated in Figure 3-1. Because VOCs will be measured in this sample and the sample vial will have headspace, only a single aliquot will be drawn into the sample vial. The vial will be self-sealing and will be prepared for volatile organic analysis by purge

and trap. The semivolatiles will be prepared for analysis by extraction. Sample preparation methods are listed in Table 4-1.

4.1.3. LAW and HLW Waste Feed Analytes, Methods, Sample Volumes and Reporting Limits [C-2a(2)]

The analytes, methods and TC limits are presented in Table 4-1. The toxicity characteristic leaching procedure (TCLP) levels listed in column 4 are based on analysis using the TCLP extract for the LDR evaluation samples. However, the EPA also allows measurement of the total concentration in the waste without leaching by TCLP, in which case the result will be compared with 20 times the TC limit. This is commonly called a 'total analysis' limit. Calculated values using this alternative approach are provided in column 5. Using the total analysis decreases the volume or mass of sample needed from 100 grams to less than one gram for volatiles, and less than five grams for semivolatiles, and achieves the same result with respect to evaluation for LDR (EPA 1993). Using smaller sample size is consistent with waste minimization and ALARA while still achieving detection limits below TC regulatory levels.

4.1.4. Glass Sampling and Analysis

The sampling method, sample preparation, and analytical methods will be the same for ILAW and IHLW. Sample preparation and analytical methods are presented in Table 4-2. The IHLW will have higher radiological activity, however, and may require smaller sample sizes for ALARA . The frequency of sampling will not be the same for the ILAW and IHLW. These topics are discussed in the following sections.

4.1.4.1. Glass Sampling Methods [C-2b(3)], [C-2c]

The waste feeds will be mixed in the tanks before the waste feed enters the melters. Convection of the molten glass in the melter will further mix the waste, before the molten glass is placed into the container where it solidifies.

As the vitrified waste cools, shards form on the surface of the glass. Once the glass has cooled, a sample of the shards will be collected by a vacuum wand and transferred to a sample container. A statistical analysis performed by the Pacific Northwest National Laboratory (PNNL 1990) demonstrated that shard analysis for metals is representative of the entire glass monolith. This method is used by the West Valley DOE facility for sampling the glass produced there (West Valley 1996).

4.1.4.2. ILAW Glass Sampling Location and Frequency [C-2d]

The ILAW glass will be sampled only if an applicable organic exceeds TC limits in the sampled LAW feed lag storage tank, as discussed in section 4.1.1. The glass will be sampled from the container. The sampling location for ILAW is identified on Figure 2-2 as sample point S7.

In such a case, sampling the ILAW glass product will demonstrate with 90 percent confidence that LDR treatment standards have been met for the containers of ILAW glass produced. A 90 percent confidence interval is based on recommended sampling for a one-tailed confidence interval, as discussed in SW-846, Chapter 9 (EPA 1997a). The statistical approach that will be used is recommended by the EPA in its two documents: *Guidance for the Data Quality Objectives Process* (EPA 1994) and *Guidance for Data Quality Assessment* (EPA 1996).

The following steps will be performed to assess whether the ILAW glass meets LDR treatment criteria.

1. Analyze samples from five randomly-selected containers of ILAW glass produced from the LAW feed lag storage tank that failed to meet the TC limit for an applicable organic compound. Refer to section 4.1.1 for a discussion on the LDR evaluation approach.

2. Measure concentrations of UHC inorganics (antimony, beryllium, nickel, thallium, and total and amenable cyanide).

3. Calculate a 90 percent confidence interval estimate of the mean for each UHC inorganic.

4. Compare the upper confidence limit of the interval with the appropriate treatment standard.

5. The ILAW glass product has satisfied the LDR treatment standard if the 90 percent upper confidence limit is *below* the LDR treatment standard.

6. If the 90 percent upper confidence limit is *above* the LDR treatment standard, randomly select another container and recalculate the confidence interval.

7. Repeat until the 90 percent upper confidence limit falls below the applicable LDR treatment standard or until 10 containers have been tested.

No more than 10 samples are recommended. Normally more samples will decrease the width of the confidence interval and provide a better estimate of the true population mean. Beyond 10 samples, however, the improved confidence interval derived from additional samples does not warrant the increased cost of sampling and analysis.

ILAW glass production will stop if the glass fails the disposal criteria after samples have been collected from 10 glass containers and analytical results are known. A corrective action investigation will be conducted to determine the best approach to correct the problem.

4.1.4.3. IHLW Glass Sampling Location and Frequency [C-2d]

The IHLW glass will be sampled only if an applicable organic exceeds the TC limit in the sampled HLW concentrate tank, as previously discussed in section 4.1.1. The glass will be sampled from the container. The sampling location for IHLW is identified on Figure 2-2 as sample point S8.

A statistical approach for sampling the IHLW glass product is not appropriate, since less than five containers of IHLW glass is produced from one tank of HLW concentrate. Therefore, each container of IHLW glass produced from a HLW concentrate tank that failed the TC limit for an applicable organic will be sampled.

The IHLW glass will be analyzed for UHC inorganics (antimony, beryllium, nickel, thallium, and total and amenable cyanide). If the analytical results indicate that the treatment standards for a UHC inorganic has not been met, then a corrective action investigation will be conducted to determine the best approach to correct the problem.

4.1.4.4. Analytical Methods and Sample Volumes [C-2a(2)]

Table 4-2 lists the currently selected SW-846 (EPA 1997a) preparation and analysis methods. Any method allowed in the most recent version of SW-846 that is applicable to the analytes listed in Table 4-2

will be accepted for sample preparation and analysis or methods which yield equivalent accuracy. As discussed previously, the analytes of interest in the glass are the inorganic UHCs. Inductively coupled plasma mass spectrometry or inductively coupled plasma emission analyses may be used for metals. A total analysis may be performed for the metals instead of TCLP, and the result compared with 20 times the TC limit to assess whether the LDR levels will be met in terms of EPA TCLP guidance (EPA 1993). The total constituent analysis requires a one to two gram sample size to perform analysis on all metals listed in Table 4-2, as opposed to the larger 10 gram sample size for TCLP.

The universal treatment standards used for determining LDR compliance for total cyanide and amenable cyanide require the use of 10 grams of sample, which must be distilled for one hour and 15 minutes as specified in 40 CFR 268.48. Table 4-2 lists the soil leaching method, followed by distillation and various analytical options, such as automated or manual colorimetric methods or selected ion electrode. Smaller sample sizes may be allowed according to the Federal Register, 62 FR 62079.

4.1.4.5. Reporting Limits

The method detection limits and estimated quantitation limits (EQLs) will be determined as defined by Chapter 1 of SW-846 (EPA 1997a). The method detection limits will include sample preparation methods, and will be determined by spiking uncontaminated water and solid (typically sand) with known concentrations of the target analyte.

Each EPA method in SW-846 (EPA 1997a) lists target EQLs in water, soil or both matrices. Water EQLs are lower than those in soil or waste. For various waste types, the methods list EQL multipliers relative to water or soil. The SW-846 methods stress that the EQL will differ by matrix and should be evaluated by matrix.

For each analyte or analysis, the goal is to provide EQLs that are below the LDR or TC levels, depending on the regulatory requirement for the sample. Refer to section 5.3 of the QAPjP (BNFL 2000b) for a more detailed discussion of detection limits and EQLs.

4.2. Secondary Waste Streams [C-2a], [C-2a(1)]

The RPP-WTP's primary mission is to vitrify waste. This process also generates a variety of secondary waste streams, which must be properly managed. The management of secondary waste streams that will be regulated as dangerous waste is discussed in this section.

Secondary waste streams that will be transferred back to the DST system unit will be designated with waste numbers consistent with those initially provided by the DST system unit, because secondary wastes are derived from the waste feed without the addition of dangerous waste.

Secondary waste streams are divided into solid waste streams, discussed in section 4.2.1, and liquid waste streams, discussed in section 4.2.2. Dangerous waste streams generated within the RPP-WTP will meet the waste acceptance criteria or protocols established by the receiving TSD facilities' permits and operating authority. This document does not outline the details of sampling and analyzing each waste stream because each TSD receiving waste may update its waste acceptance criteria and thus alter the required waste analyses.

The following general information related to waste classification applies to all solid and liquid secondary waste streams:

- The RPP-WTP will not accept or generate TSCA-regulated PCB waste except for analytical standards required by SW-846 (EPA 1997a).

- Analytical method procedures for determining waste numbers will be performed according to the latest revision of the applicable SW-846 (EPA 1997a) method.

- Acceptable knowledge for waste designation of secondary waste will include analytical data or process knowledge.

- Some waste streams will be designated using process knowledge. Acceptable process knowledge includes:

  - Historical analytical data
  - Mass balance from a controlled process with a specified output for a specified input
  - Material safety data sheets
  - Analytical data on the waste from a similar process
  - For mixed waste, process knowledge could include information from surrogate material

- Reactive and ignitable waste numbers will be removed from the DST material, and will not apply to secondary waste derived from waste feed.

- The listed waste numbers F001 through F005 will follow the secondary waste if the secondary waste is derived from the waste feed. F039 waste was never placed in the DST system unit, as discussed in section 3.1, and will not be designated to secondary waste.

- Secondary wastes that are not derived from the waste feed, such as laboratory and maintenance waste, will be characterized and designated with the appropriate EPA hazardous waste numbers and Washington State dangerous waste numbers and managed accordingly.

- Documentation of the process knowledge or analytical data used to designate the waste numbers will be maintained in RPP-WTP operating record. Documentation is discussed in section 5 and waste tracking is presented in section 6.

- Characteristic waste numbers can be removed after testing or the application of process knowledge, as appropriate.

4.2.1. Solid Waste Streams

Solid waste streams are managed in accordance with the current *Hanford Site Solid Waste Acceptance Criteria* (HSSWAC) (HNF 1998) and RPP-WTP will meet the waste acceptance criteria in the HSSWAC for the receiving TSD. Solid wastes that are stored at the RPP-WTP will meet the acceptance criteria of the specific storage area.

4.2.1.1. Solid Waste Characterized as Mixed Waste

Solid waste streams that will come into contact with the waste feed during any stage of the treatment processes will be designated as mixed waste by process knowledge. These secondary waste streams are

listed in Table 4-3. EPA hazardous waste numbers and Washington State dangerous waste numbers will be assigned to these mixed waste streams, based on the characterization of the waste feed. Each waste stream discussed below will meet the waste acceptance criteria of the receiving facility. A discussion of each of these mixed waste streams is provided below.

Out-of-Service Melters

It is anticipated that melters will require replacement at some point, due to the harsh conditions of the vitrification process. When the end of a melter's operational life is reached, residual molten glass will be removed as immobilized product as much as practical. The melter will be allowed to cool and will be disconnected from all systems.

The locally-shielded melter (LSM) will be a disposal container or overpack, defined as a RCRA miscellaneous unit, containing the LAW melter. The LSM, including residual glass, will be the final disposal container. After disconnection, the openings will be welded closed to provide complete containment. The LAW LSM will be transported to a permitted Hanford TSD. Refer to Chapter 4, section 4.2.4, of this DWPA for a more complete description of the LSM.

A HLW melter that is removed from service and that meets the HSSWAC will be placed into an overpack that will serve as its disposal container. The overpacked HLW melter will be transported to a permitted Hanford TSD.

An out-of-service HLW melter may not meet the HSSWAC, depending on its radionuclide content. If this should occur, the overpacked HLW melter will be stored at the RPP-WTP until facility closure, at which time it will be dismantled, packaged and transported to a permitted Hanford TSD.

The details for the disposal of the LAW LSM and overpacked HLW melters are currently under development.

HLW Glass Residue

The disposal path for HLW glass residue that may be removed from an out-of-service HLW melter will be determined case by case. Final disposal will be based on the radionuclide content and dangerous characteristics of the glass residue.

Melter Components

Melters will be fitted with various ancillary equipment, such as bubbler assemblies, heating elements and thermocouples, that may require periodic replacement. The ancillary equipment will be removed, designated by process knowledge as mixed waste, and packaged and transferred to an appropriate Hanford TSD.

Offgas Treatment System Components

HEMEs and HEPA filters will be components of the offgas treatment system incorporated to remove contaminants from the offgas streams prior to discharge. These components will periodically be replaced to maintain treatment efficiency. They will be designated as mixed waste by process knowledge, packaged and transferred to an appropriate Hanford TSD.

Spent Ion Exchange Resins

Ion exchange resins used for cesium and technetium removal will periodically be replaced to maintain treatment efficiency. These resins will be designated by process knowledge and managed as mixed waste. They will be eluted, removed from their respective columns, packaged and transferred to an appropriate Hanford TSD.

Out-of-Service Equipment

Ancillary equipment such as pumps, valves, piping, motors, and electrical equipment that is no longer fit for use will be removed from service and designated as out-of-service equipment. Out-of-service equipment that contacted the waste feed will be designated as mixed waste by process knowledge, packaged and transferred to an appropriate Hanford TSD.

Entrained Solids

Entrained solids will be generated by pretreating the LAW feed using ultrafiltration. The separated solids will be washed and again concentrated using ultrafiltration. The entrained solids will either be incorporated into the IHLW or the ILAW or returned to the DST system unit via pipeline in the form of a slurry.

4.2.1.2. Variable Solid Waste Streams

The wastes streams listed in Table 4-4 can be dangerous waste or mixed waste, depending on the source of the waste and whether it had contact with the waste feed. EPA hazardous waste numbers and Washington State dangerous waste numbers will be assigned to these waste streams, based on the designation of the waste by process knowledge. Each waste stream discussed below will meet the waste acceptance criteria of the receiving TSD.

Laboratory Waste

Non-wastewater laboratory waste derived from the waste feed will be designated as mixed waste by process knowledge, packaged and transferred to an appropriate Hanford TSD. Other non-wastewater laboratory wastes, such as off-specification laboratory chemicals, will be designated by process knowledge and managed accordingly. These wastes will be packaged and disposed of at an appropriate TSD.

Personal Protective Equipment

Personnel performing certain tasks such as facility maintenance, treatment process operations, and waste packaging activities, will wear personal protective equipment. Used personal protective equipment will be returned to the vendor for cleaning and refurbishment. That which cannot be recycled to the vendor, and which has had contact with waste feed, will be designated as mixed waste by process knowledge, packaged and transferred to an appropriate Hanford TSD. Personal protective equipment waste that is not radioactive but is designated as dangerous waste by process knowledge will be packaged and disposed of at an appropriate TSD.

Maintenance Waste

Maintenance wastes such as paints, lubricants, cleaning solvents, adhesives, and off-specification chemicals will be generated at the RPP-WTP. Maintenance wastes derived from the waste feed will be

designated as mixed waste by process knowledge, packaged and transferred to an appropriate Hanford TSD. Those not derived from the waste feed and designated as dangerous waste by process knowledge will be packaged and disposed of at an appropriate TSD.

4.2.2. Liquid Waste Streams

The dangerous liquid waste streams generated at RPP-WTP will be managed in accordance with the *Hanford Site Liquid Waste Acceptance Criteria* (HSLWAC) (WMFS 1998). The LERF or the ETF, or both, will receive all hazardous aqueous waste generated at RPP-WTP listed below. RPP-WTP will meet the acceptance criteria as outlined in the HSLWAC. The LERF and ETF will allow process knowledge to be used in lieu of some analyses in instances where process knowledge is adequate, and a LERF or ETF representative will work with a RPP-WTP representative to identify the waste acceptance criteria and analyses that are appropriate for characterizing the liquid waste. A discussion of each aqueous waste stream listed in Table 4-5 is presented below.

Should sampling be required, the sample will be drawn from a location identified on Figure 2-2 as S9. The aqueous waste streams listed in Table 4-5 will be collected in an effluent collection tank. A grab sample will be taken by autosampler from the effluent collection tank to verify that the analytes meet the established waste acceptance criteria from the HSLWAC, before transfer to the LERF or ETF. The autosampling system is described in section 3.2.6.1 and the autosampler is illustrated in Figure 3-1.

Aqueous Waste from Processes

Table 4-5 lists the aqueous waste streams from processing. Aqueous waste streams will be generated by condensing offgas streams that will be in direct contact with or will be derived from the waste feed being processed. The LAW melter offgas scrubber blowdown, technetium process condensate, and technetium ion exchange rinse water will also be aqueous waste streams. The analytical laboratory will also generate aqueous waste. These waste streams will contain both radioactive and dangerous waste components and will be similar to the process condensate stream described in the *Hanford Facility Dangerous Waste Permit Application, 242-A Evaporator* (DOE-RL 1997). These aqueous waste streams will be piped to the effluent collection tank prior to transfer to the LERF or ETF by underground pipeline for treatment.

Plant Waste Water

Waste water will be generated primarily from decontamination and washdown activities in the RPP-WTP. The waste water will be designated as mixed waste by process knowledge, since it will contain dilute waste feed constituents. Waste water will also be piped to the effluent collection tank prior to transfer to the LERF or ETF.

Figure 4-1. LDR Sampling Logic for ILAW

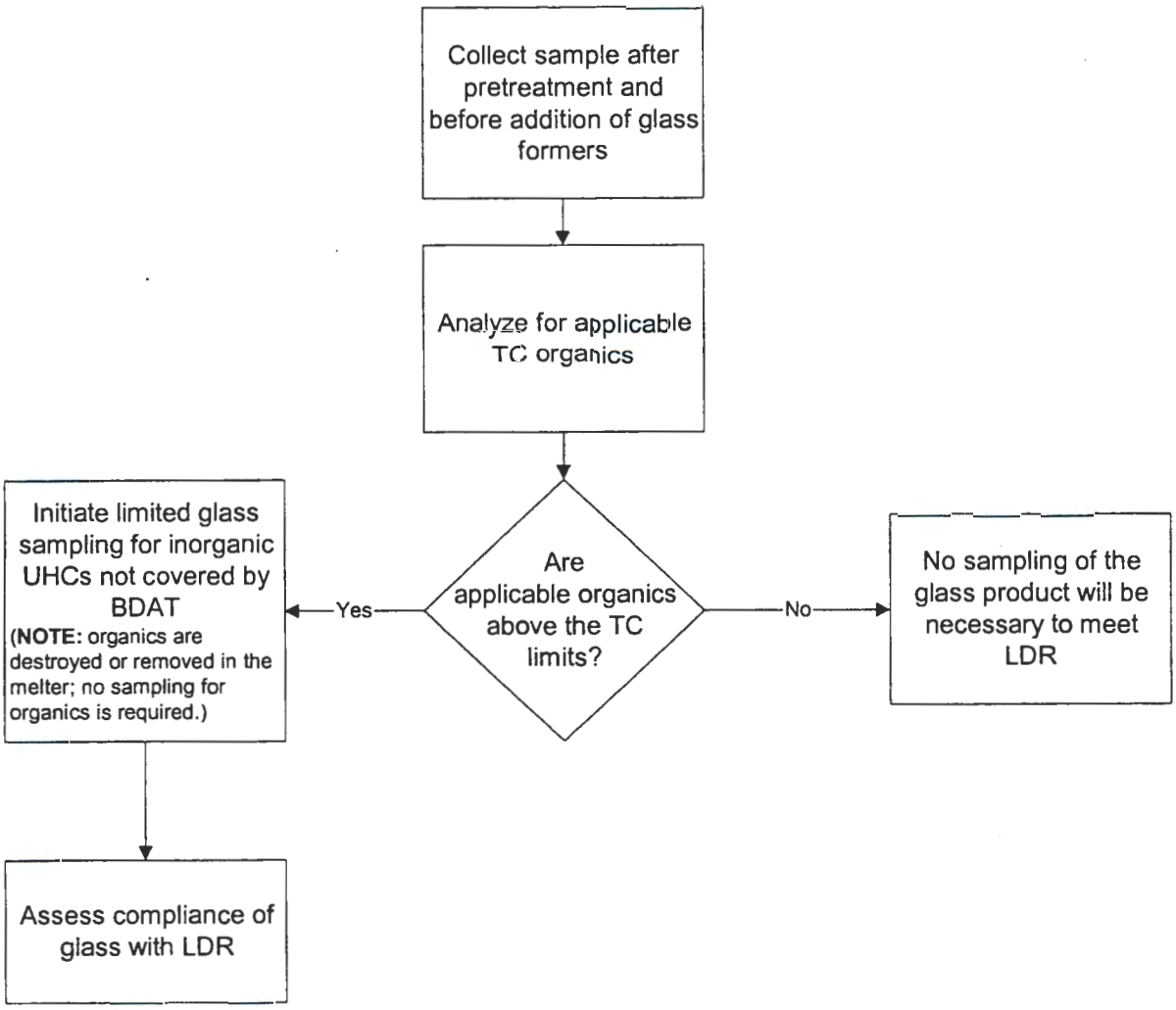

Table 4-1. LDR Evaluation Analytes, Methods and TC Limits [C-2a(2)]

CAS #	Compound	Waste Number	TCLP Level (mg/L)	Total Analysis Limit (mg/kg)	Prep[a] Method for Liquids	Prep[a] Method for Solids	Analysis Method[a]
71-43-2	Benzene	D018	0.5	10	5030B	5035	8260B
56-23-5	Carbon tetrachloride	D019	0.5	10	5030B	5035	8260B
67-66-3	Chloroform	D022	6	120	5030B	5035	8260B
107-06-2	1,2-Dichloroethane	D028	0.5	10	5030B	5035	8260B
75-35-4	1,1-Dichloroethene	D029	0.7	14	5030B	5035	8260B
121-14-2	2,4-Dinitrotoluene	D030	0.13	2.6	3510C or 3520C	3540C or 3550B	8270C
87-68-3	Hexachlorobutadiene	D033	0.5	10	3510C or 3520C	3540C or 3550B	8270C
67-72-1	Hexachloroethane	D034	3	60	5030B	5035	8260B
78-93-3	2-Butanone (Methyl ethyl ketone)	D035	200	4000	5030B	5035	8260B
98-95-3	Nitrobenzene	D036	2	40	3510C or 3520C	3540C or 3550B	8270C
110-86-1	Pyridine	D038	5	100	3510C or 3520C	3540C or 3550B	8270C
127-18-4	1,1,2,2-Tetrachloroethene	D039	0.7	14	5030B	5035	8260B
79-01-6	1,1,2-Trichloroethylene	D040	0.5	10	5030B	5035	8260B
95-95-4	2,4,5-Trichlorophenol	D041	400	8000	3510C or 3520C	3540C or 3550B	8270C
75-01-4	1-Chloroethene	D043	0.2	4	5030B	5035	8260B

[a] For all methods, any current version of methods published in SW-846 (EPA 1997a) is acceptable.
CAS# = Chemical Abstract Services number.

Table 4-2. Preparation and Analytical Methods for Inorganic Underlying Hazardous Constituents [C-2a(2)]

CAS #	Analyte	LDR Treatment Level as Determined by TCLP Level (mg/L)	LDR Treatment Level as Determined by Total Analysis (mg/kg) [a]	Prep Method [b]	Analysis Method [b]
7440-36-0	Antimony	1.15	23	3050B or 3051A	6010B or 6020A
7440-41-7	Beryllium	1.22	24.4	3050B or 3051A	6010B or 6020A
57-12-5	Cyanide	NA	590	[c]	[c]
57-12-5a	Cyanide (amenable)	NA	30	[c]	[c]
7440-02-0	Nickel	11	220	3050B or 3051A	6010B or 6020A
7440-28-0	Thallium	0.20	4	3050B or 3051A	6010B or 6020A

[a] The total is the TCLP limit times 20 to compensate for the normal 20:1 leachate to sample ratio used for TCLP. Analysis of the glass for total constituents is recommended, as smaller sample sizes may be used according to SW-846 (EPA 1997a) method criteria.

[b] For all methods, any current version of methods published in SW-846 is acceptable.

[c] The methods for determination of total and amenable cyanide, as recommended in the current SW-846, allow for either of the following preparation and analysis sequences:

1 9013 followed by 9010B for distillation, followed by either 9014 by titration or manual colorimetric analysis or 9213 by selected ion electrode for analysis

2 9013 for preparation followed by 9012A for distillation and automated colorimetric analysis

CAS# = Chemical Abstract Services number.

Table 4-3. Secondary Solid Mixed Waste Streams

Waste Stream	Disposal	Characterization
Out-of-service melters	[a]	Designated by process knowledge
HLW glass residue	Determined case by case	
Melter components	These wastes will be packaged and transferred to the appropriate Hanford TSD.	
Offgas treatment system components: high-efficiency mist eliminators HEPA filters		
Spent ion exchange resins		
Out-of-service equipment		
Entrained solids	[b]	

[a] Disposal of out of service melters is currently under development.

[b] Entrained solids may be returned to the DST system unit via pipeline as a slurry or added to the LAW or HLW feed for vitrification.

Table 4-4. Variable Solid Waste Streams

Waste Stream	Characterization	Disposal
Non-waste water laboratory waste	Each generation event of these wastes will be individually designated by process knowledge and will comply with the receiving TSD waste acceptance criteria	The wastes will be packaged and transferred for disposal to an appropriate TSD
Personal protective equipment		
Maintenance waste		

Table 4-5. Liquid Mixed Waste Streams

Waste Stream	Characterization and Disposal	Sampling Point	Sampling Frequency
LAW feed evaporator condensate	The waste streams will collect in a mixer tank, be designated as mixed waste by process knowledge and analysis, as necessary, and will be transferred to the LERF or ETF.	The streams collected in a mixer tank are grab sampled by autosampler.	Sampling will be: • before initial discharge • at major process change • at request for re-sampling by the ETF
LAW melter feed evaporator condensate			
HLW offgas condensate			
LAW melter offgas scrubber blowdown			
Technetium process condensate			
Technetium ion exchange rinse water			
Laboratory wastewater			
Plant wastewater containing waste feed			

5. Waste Transfer Documentation System [C-3]

Condition II.P.1. of the Hanford Site RCRA permit (Ecology 1994) requires a manifest for waste received from off-site or waste shipped off-site, but not for waste transferred between site facilities. The RPP-WTP will be considered a Hanford Site facility because it will operate under the same EPA identification number as all other Hanford Site facilities. Therefore, manifests are not required for waste transfers from the RPP-WTP to Hanford Site TSD facilities. Condition II.Q.1. requires documentation for on-site transportation over roadways, but specifically exempts waste that will be transported by rail or pipeline unless required by unit-specific conditions. This exemption will apply to waste feed that is transferred to and from the RPP-WTP by underground pipeline, and effluent transferred to the LERF or ETF by underground pipeline.

DOE owns and operates numerous Hanford TSD units used for solid and liquid waste treatment, storage and disposal. Since the RPP-WTP is part of the Hanford Site, waste transfers will be conducted in accordance with the current HSSWAC (HNF 1998) and the current HSLWAC (WMFS 1998). Both of these Hanford waste acceptance criteria provide the baseline criteria for the acceptance of radioactive waste at Hanford TSD units.

Waste transfer documentation and supporting process knowledge will be considered QA records and managed in accordance with the requirements for document control, as outlined in the QAPjP (BNFL 2000b). This documentation will specify the identity of the receiver and confirm that the receiver accepted the waste. RPP-WTP staff and the waste receiver's acceptance personnel will date and sign the waste transfer papers.

Section 5.1 describes how solid waste transfers will be conducted. Section 5.2 addresses the liquid waste transfers to the LERF or ETF. Section 5.3 addresses the LDR notification and certification of RPP-WTP shipped waste, should it contain LDR constituents above the treatment standards listed in 40 CFR 268.40.

5.1. Solid Waste Transfer

The RPP-WTP, as a waste generator, will provide documentation with each shipment of regulated waste to a Hanford TSD that meets the requirements of the Hanford RCRA Permit, General Condition II.Q.1. Regulated waste shipped to an offsite TSD will be accompanied by a manifest according to WAC 173-303-180.

5.2. Liquid Waste Transfer

A waste profile sheet as required in the HSLWAC will accompany aqueous waste transfers from the RPP-WTP to the 200 Area LERF or ETF.

5.3. LDR Notification and Certification

RPP-WTP will provide an LDR information form to the receiving TSD facility with the transfer documents for solid waste and liquid waste transfers.

6. Tracking System [C-4]

The plant information network will be a database management system designed to track the processing of waste material through the RPP-WTP and to collate product quality information collected from associated systems. An overview of the network software systems is provided in Figure 6-1 and summarized in this section. The plant information network will interface with the integrated control network (ICN) and will include the following:

- Laboratory information management system (LIMS)
- Waste tracking and inventory system (WTIS)
- Maintenance management system
- Manufacturing resource planning system

The ICN will maintain and display "maps" of all relevant equipment locations, as well as container identification and status information that will be communicated to the WTIS.

The LIMS will record all sample results and other laboratory-related information, as described in section 6.2.

6.1. Inventory and Batch Tracking

The manufacturing resource planning system supports the planning of resources, including process material and an inventory of containers and chemicals, as well as production schedule items, receipts and items relating to process inspections.

The WTIS will contain a record of all glass product containers, empty containers and rejected glass products that will be located in the RPP-WTP. All product containers will bear unique numbers for identification. The WTIS will serve as the main repository for all relevant information through each sequence or step of processing, from waste receipt through final disposal, and will include QA control tracking throughout the processing history of any given batch of waste feed and data generated for each container of vitrified waste.

When a container is due for export, the final QA checks will be logged into the WTIS system along with the number of the export container. At the end of a batch cycle, all data applicable to that particular batch will be catalogued to facilitate historical recording and reporting.

Data input into the WTIS by operators will be limited during sampling and analysis, and during container loading and storage. To minimize operator error, suitable control features will be provided where required, along with interlocks and viewing facilities.

6.2. Sample Tracking

Sampling activities will be started, monitored, and controlled by the plant ICN, with key sequence durations and operations logged into the waste tracking system directly from the ICN. Sampling operations will be requested by the ICN, plant operators or laboratory personnel. These requests will be time and date stamped, as will the actual sampling operation and all associated sample handling and laboratory activities. Sample requests and operations will be channeled through the ICN, which will operate in a supervisory capacity and will communicate the necessary information to the waste tracking system.

The LIMS will be an integral feature of the plant information network. Workstations will be located within the laboratory and the main plant control room. The LIMS will record the required quality control checks to assure correct sample preparation and selection of analyses, and controlled checking and approval of results. Samples will be tracked within the laboratory area.

Sample containers received in the preparation area will be identified by their ID label. The ID label provides details of the sample source and, therefore, specifies the required preparation and analysis techniques. The ID will be registered at all locations where manual intervention is required, such as manual samplers. The results of calibration checks on equipment and analyzers will be recorded.

Analytical results will be compiled by the LIMS and held pending checking and approval by laboratory staff before being formally recorded within the WTIS. Results that affect the progression of the main plant process will be communicated to appropriate plant personnel where required. Samples transferred to any laboratory external to RPP-WTP will also be tracked in the LIMS. Samples that come under the exclusion provided in WAC 173-303-071(3)(l) may not be tracked.

6.3. Secondary Waste Stream Tracking

Secondary waste streams, as well as waste streams returned to the process, will be tracked within the WTIS in a similar manner to primary waste streams. All secondary waste streams will be managed by using assigned, unique ID numbers. Corresponding histories and data collection triggers will gather process and status information during the processing of secondary waste. Shipments of over-packs will be labeled and tracked as part of the inventory control function of the WTIS, in order to satisfy tracking of waste disposal records, customer receipts, and deliveries.

Personnel using consumables that come into contact with hazardous waste may generate hazardous waste at the time of performing maintenance, decommissioning, or disposal activities. These wastes may include such items as equipment, hardware, personal protective equipment, and materials used in the normal operation of the facility. Consumables will be tracked by the maintenance management system, with appropriate fields denoting the hazardous classification of the replaced parts and materials, along with the cross-linked document references to disposal records. Waste being accumulated in satellite accumulation areas under the provisions of WAC 173-303-200 may not be tracked until it has been accepted into a permitted portion of the RPP-WTP.

Figure 6-1. Plant Information Network Data Relationships

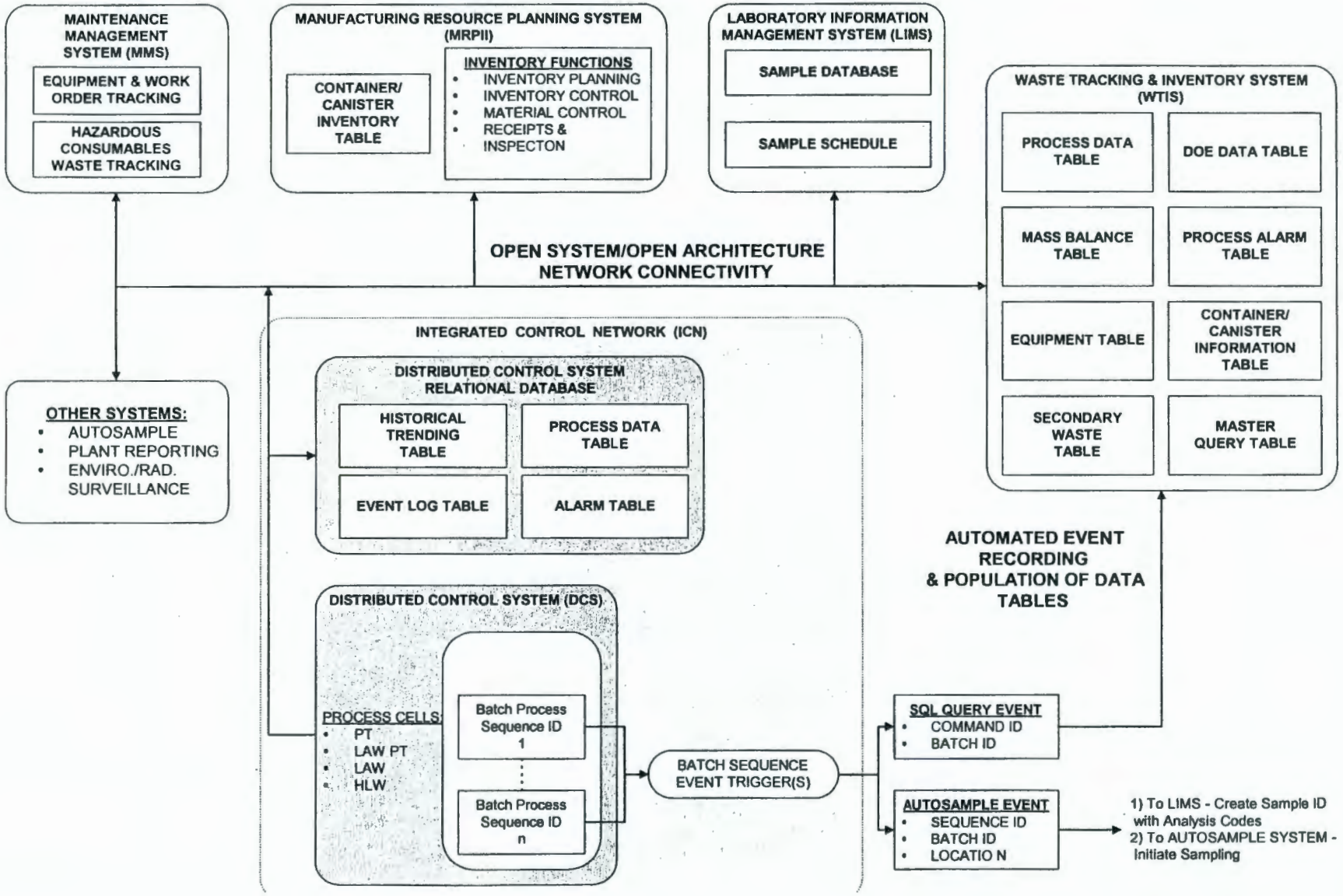

7. Recordkeeping

Records generated for environmental compliance are documents or electronic files that furnish evidence of quality, and will be specified, prepared and maintained. Records will be legible, identifiable, and retrievable, and will be protected against damage, deterioration, or loss. Requirements and responsibilities for record transmission, distribution, retention, maintenance, and disposal will be established and documented. The requirements contained in (a), (b), and (c) of WAC 173-303-380 "Facility Recordkeeping" are addressed in this WAP and will be managed through the waste tracking system recordkeeping policies. Additional requirements listed under WAC 173-303-380 are addressed in the QAPjP (BNFL 2000b). Records generated to support activities described in the WAP will be considered QA records. These may be in electronic or hardcopy format, and will be managed according to the requirements outlined in the QAPjP (BNFL 2000b).

The following documents that support this WAP are considered QA records:

- Sample information provided by the DST system unit, including constituents of concern from sampling activities, laboratory analysis results, waste certifications, shipping and transfer papers
- Verification sampling and analysis data, including laboratory data
- Documentation used for any discrepancy resolution and non-conformance action
- Confirmation sampling and analysis data, including constituents of concern and laboratory data
- Documentation used for LDR evaluation
- LDR evaluation analysis data, including constituents of concern and laboratory data
- Analytical data developed for meeting the waste acceptance criteria of other receiving facilities
- Calibration data from analytical equipment
- All shipment and waste transfer documentation, including waste profile sheets and LDR information forms

References

10 CFR 72.3. *Licensing Requirements for the Independent Storage of Spent Nuclear Fuel and High-Level Radioactive Waste*, as amended. Code of Federal Regulations.

40 CFR 264. *Standards for Owners and Operators of Hazardous Waste Treatment, Storage, and Disposal Facilities*, as amended. Code of Federal Regulations.

40 CFR 268. *Land Disposal Restrictions*, as amended. Code of Federal Regulations.

49 CFR 173. *Shippers – General Requirements for Shipments and Packages*, as amended. Code of Federal Regulations.

62 FR 62079. 1997. *Joint NRC/EPA Guidance on Testing Requirements for Mixed Radioactive and Hazardous Waste*, Vol. 62, No. 224. 20 November 1997. Federal Register.

ASTM. 1990. *Preparation of Radioactive Mixed Waste Samples for Measurement of RCRA Organic Compounds*, Tomkins BA and Caton JE, Waste Testing and Quality Assurance, Second Volume, ASTM STP 1062, Friedman D, Editor. American Society for Testing and Materials, Philadelphia, Pennsylvania, USA.

Bernero RM. 1993. Letter to Lytle J, Deputy Assistant Secretary for Waste Operations, Office of Waste Management, Environmental Restoration and Waste Management, US Department of Energy, Washington D.C., from Nuclear Regulatory Commission, Washington D.C., 2 March 1993. US Department of Energy, Washington D.C. USA.

BNFL. 1999. *Organic Analysis of AW-101 and AN-107 Tank Waste*, Klinger GS and others, BNFL-RPT-001, Revision 0. 1 March 1999. BNFL Inc. Richland, Washington, USA.

BNFL. 2000a. *River Protection Project - Waste Treatment Plant Dangerous Waste Permit Application*, BNFL-5193-RCRA-01, Revision 0. 31 March 2000. BNFL Inc., Richland, Washington, USA.

BNFL. 2000b. *River Protection Project – Waste Treatment Plant Quality Assurance Project Plan for the Waste Analysis Plan*, QP-W375-EN00004, Revision 0, 31 March 2000. BNFL Inc., Richland, Washington, USA.

CAA. 1970. *Clean Air Act of 1970,* 42 USC, Section 7401. US Congress, Washington D.C., USA.

DOE-RL. 1996. *Double-Shell Tank System Dangerous Waste Permit Application*, DOE/RL-90-39, Revision 8. October 1996. US Department of Energy, Richland Operations Office, Richland, Washington, USA.

DOE-RL. 1997. *Hanford Facility Dangerous Waste Permit Application, 242-A Evaporator*, DOE/RL-90-42. July 1997. US Department of Energy, Richland Operations Office, Richland, Washington, USA.

DOE-RL. 1998. *Hanford Facility Dangerous Waste Permit Application, General Information Portion*, DOE/RL-91-28, Revision 4. May 1998. US Department of Energy, Richland Operations, Richland, Washington, USA.

DOE-RL. 1999. *Tank Waste Remediation System Final Safety Analysis Report,* HNF-SD-WM-SAR-067, Revision 0. US Department of Energy, Richland, Washington, USA.

Ecology. 1994. *Dangerous Waste Portion of the Resource Conservation and Recovery Act Permit for the Treatment, Storage, and Disposal of Dangerous Waste,* WA7890008967. Washington State Department of Ecology, Olympia, Washington, USA.

Ecology. 1999. *LDR & Delisting Strategies Meeting Minutes*, June 24, 1999. Washington State Department of Ecology Offices, Lacey, Washington, USA.

Ecology, EPA, and DOE. 1996. *Hanford Federal Facility Agreement and Consent Order*, (Tri-Party Agreement), 2 vols., as amended. Washington State Department of Ecology, Olympia, Washington, USA, US Environmental Protection Agency, Washington D.C., USA, and US Department of Energy, Washington D.C., USA.

EPA. 1990. *Withdrawal of Cyanide and Sulfide Reactivity Guidance.* US Environmental Protection Agency, Office of Solid Waste and Emergency Response, Washington, D.C., USA.

EPA. 1992a. *Alcohol-Content Exclusion for the Ignitability Characteristic*, EPA/530/R-92/014G. July 1992. US Environmental Protection Agency, Washington, D.C., USA.

EPA. 1992b. *Vitrification Technologies for Treatment of Hazardous and Radioactive Waste*, EPA/625/R-92/002. May 1992. US Environmental Protection Agency, Washington, D.C., USA.

EPA. 1993. *Technical Assistance Document for Complying with the TC Rule and Implementing the Toxicity Characteristic Leaching Procedure (TCLP)*, DCN EPA 902-B-93-001, Volume II. US Environmental Protection Agency, Region II, RCRA Outreach Program, Edison, New Jersey, USA.

EPA. 1994. *Guidance for the Data Quality Objectives Process*, EPA QA/G-4. US Environmental Protection Agency, Washington, D.C., USA.

EPA. 1996. *Guidance for Data Quality Assessment*, EPA QA/G-9. US Environmental Protection Agency, Washington, D.C., USA.

EPA. 1997a. *Test Methods for Evaluating Solid Waste, Physical Chemical Methods*, SW-846, Third Edition, (as amended by Updates I, II, IIA, IIB, and III). US Environmental Protection Agency, Washington, D.C., USA.

EPA. 1997b. *Methods and Guidance for Analysis of Water*, CD-ROM EPA 821-C-97-001, Version 1.0. April 1997. US Environmental Protection Agency, Office of Science and Technology, Washington, D.C., USA.

LMHC. 1998. *Double-Shell Tank System Waste Analysis Plan*, Mulkey CH, HNF-SD-WM-EV-053, Revision 5. September 1998. Lockheed Martin Hanford Corporation, Richland, Washington, USA.

HNF. 1998. *Hanford Site Solid Waste Acceptance Criteria,* HNF-EP-0063, Revision 5. June 1998. Fluor Daniel Hanford, Inc., Richland, Washington, USA.

Mong GM, Campbell JA, Orr RD, Clauss SA , Wahl KL and Hoopes FV. 1997. *Activity reduction of radioactive mixed wastes for subsequent carboxylate determinations*, Journal of Radioanalytical and Nuclear Chemistry, Vol. 219, No. 1. Akademia Kiado, Hungary.

NRC, EPA. 1997. *Joint NRC/EPA Guidance on Testing Requirements for Mixed Radioactive and Hazardous Waste*, November 1997. US Nuclear Regulatory Commission, Washington D.C., USA, and US Environmental Protection Agency, Washington D.C., USA.

Paperiello CJ. 1997. Letter to Kinzer J, Office of Tank Waste Remediation System, US Department of Energy, Richland Operations Office, Richland, Washington, from Nuclear Regulatory Commission, Washington D.C, June 9, 1997. US Department of Energy, Richland, Washington, USA.

PNL.1993. *Methods of Chemical Analysis for Organic Waste Constituents in Radioactive Materials: A Literature Review*, Clauss SA and Bean RM, PNL-8266. Pacific Northwest Laboratory, Richland, Washington, USA.

PNNL. 1990. *Statistical Analysis of Shard and Container Glass Correlation Test*, Pulsipher BJ, PNL-10655. Pacific Northwest National Laboratory, Richland, Washington, USA.

RCRA. 1976. *Resource Conservation and Recovery Act of 1976*, 42 USC 6901. US Congress, Washington D.C., USA.

TSCA. 1976. *Toxic Substances Control Act of 1976*, 15 USC 2601. US Congress, Washington D.C., USA.

WAC 173-303. *Dangerous Waste Regulations,* as amended. Washington Administrative Code.

WCAA. 1967. *Washington Clean Air Act of 1967*, as amended. Revised Code of Washington.

West Valley. 1996. *Waste Form Compliance Plan for the West Valley Demonstration High Level Waste Form*, WVDP-186, Revision 1, August 1996. West Valley Nuclear Services Company Incorporated, West Valley, New York, USA.

WMFS. 1998. *Hanford Site Liquid Waste Acceptance Criteria,* HNF-3172, Revision 0, September 1998. Waste Management Federal Services of Hanford, Inc., Richland, Washington, USA.

Appendix 3B

Appendix 3B
Quality Assurance Project Plan for the Waste Analysis Plan

BNFL Inc.

Document title:	**Quality Assurance Project Plan for the Waste Analysis Plan**
Contract deliverable number:	B-1-35
Department:	Environmental, Safety, and Health Programs
Contract number:	DE-AC06-96RL13308
Author(s):	John Sipkowski
Principal Author Signature	
Document Number:	QP-W375-EN00004, Rev. 0
Checked by:	Jeffrey Markillie, REM
Principal Checker Signature	
Date of issue:	31 March 2000
Issue status:	Approved
Approved by:	O. Lee Bostic, PE
Approver's position:	Manager, Environmental Safety
	Approver's signature

BNFL Inc.
RPP-WTP Project
3000 George Washington Way
Richland, WA 99352
United States of America
Tel: 509 371 3000
Fax: 509 371 3001

BNFL Inc.

QUALITY ASSURANCE PROJECT PLAN APPROVAL FORM

Title: Quality Assurance Project Plan for the Waste Analysis Plan
Project: River Protection Project – Waste Treatment Plant
US Department of Energy, Office of River Protection, Hanford Site

Commitment to Implement this Quality Assurance Project Plan:

A. Dobson
Head of Operations and Safety
BNFL Inc.
Signature
Date 3 April 2000

G. Voyles
RPP-WTP Quality Assurance Manager
BNFL Inc.
Signature
Date 3 April 2000

LIST OF QUALITY ASSURANCE PLAN RECIPIENTS

Name	Affiliation	Responsibility
A. Dobson	BNFL Inc.	RPP-WTP Head of Operations and Safety
G. Voyles	BNFL Inc.	RPP-WTP Quality Assurance Manager
Project Manager	Analytical Contractor	Analytical Project Manager
Quality Assurance Manager	Analytical Contractor	Analytical Quality Assurance Manger

Circulation List

Purpose of issue: 1 For comment
2 For action
3 For information

Name	Location	No of copies	Remarks	Purpose of issue
A. Elsden	MPF, A217	1		3
K. Boomer	MPF, B222	1		3
O.L. Bostic	ETC-1, P-123	1		3
S. Bostock	MPF, B142	1		2
M. Page	MPF, B223	1		3
I. Papp	ETC-1, N201	1		3
D. Swanberg	MPF, G113	1		3
B. Voke	MPF, I103	1		3
G. Voyles	MPF, B105	1		2

History sheet

Rev	Date	Reason for revision	Revised by
A	7 May 1999	Draft	John Cook
B	3 Nov 1999	Draft	John Sipkowski
C	13 Dec 1999	Draft for Review	John Sipkowski
D	1 March 2000	Draft for Review	John Sipkowski
0	31 March 2000	Final	John Sipkowski

Contents

Item — Page Number

Acronyms and Abbreviations vii
1. Introduction 1
2. Project Description 2
3. Constituents of Concern 4
4. Project Management 5
4.1. Project Organization and Responsibility 5
4.2. Special Training Requirements 5
4.3. Documentation and Records 6
4.3.1. Document and Record Procedures 6
4.3.2. Document and Records Storage 7
4.4. Standard Operating Procedures 7
5. Quality Objectives and Criteria for Measurement Data 9
5.1. Data Quality Objectives 9
5.2. Data Quality Indicators 9
5.2.1. Analytical Measurement Accuracy 9
5.2.2. Analytical Precision 10
5.2.3. Representativeness 10
5.3. Detection Limits and Estimated Quantitation Limits 10
5.4. Reporting Requirements 11
6. Data Acquisition and Measurement 13
6.1. Sampling Procedures and Management 13
6.1.1. Sampling Procedures and Design 13
6.1.2. Selected Sampling Equipment 13
6.1.3. Sample Handling and Shipping 13
6.1.4. Sampling Quality Assurance and Quality Control Procedures 15
6.2. Instrument and Equipment Calibration, Testing, Inspection and Maintenance 15
6.2.1. Instrument Calibration Frequency 15
6.2.2. Instrument and Equipment Testing, Inspection and Preventive Maintenance Requirements 16
6.3. Sample Preparation Methods, Analytical Procedures and Analytical Performance Requirements 16
6.4. Information Management 16
6.5. Laboratory Quality Control 16

Contents

Item — Page Number

7. Performance Assessments, Corrective Actions and Evaluations 23
   7.1. Routine Laboratory Assessment and Corrective Actions 23
   7.2. Data Reduction and Validation 23
   7.3. Reports to Management 23
8. Data Report Packages 24
9. Verification and Validation of Analytical Data 25
   9.1. Data Verification 25
   9.2. Data Validation 25
10. Data Quality Assessment 26
References 27

FIGURES

Figure 2-1. Simplified Flow Diagram and Sample Locations 3
Figure 4-1. RPP-WTP Sampling and Analysis Program Organization 8

TABLES

Table 5-1. Data Quality Objective Seven Step Process 12
Table 6-1. Proposed Sampling Methods 17
Table 6-2. Sample Preservatives, Containers, and Holding Times 18
Table 6-3. Field Quality Control Sampling 19
Table 6-4. Analytical Method Requirements 20
Table 6-5. Laboratory Quality Control Requirements 22

Acronyms and Abbreviations

DST	double-shell tank
EPA	US Environmental Protection Agency
EQL	estimated quantitation limit
HLW	high-level waste
LAW	low-activity waste
LDR	land disposal restrictions
LIMS	laboratory information management system
MDL	method detection limit
PCB	polychlorinated biphenyl
QA	quality assurance
QAPjP	Quality Assurance Project Plan
QC	quality control
RPP-WTP	River Protection Project - Waste Treatment Plant
WAC	*Washington Administrative Code*
WAP	waste analysis plan (BNFL 2000b)

1. Introduction

This quality assurance project plan (QAPjP) has been prepared to support sampling and analysis to be implemented by the River Protection Project - Waste Treatment Plant (RPP-WTP), particularly in support of the following activities:

- Verification and confirmation of waste composition
- Compliance with land disposal restrictions (LDRs)
- Vitrification process monitoring for compliance assessment
- Characterization of secondary waste streams for disposal purposes

This QAPjP will ensure that the quality and quantity of data resulting from these sampling and analysis activities can support the decision-making process for the management of RPP-WTP wastes. This document was prepared using guidance provided in the following references:

- EPA. 1998. *EPA Guidance for Quality Assurance Project Plans*
- EPA. 1997. *Test Methods for Evaluating Solid Waste - Physical/Chemical Methods*
- EPA. 1992. *Quality Management Program Plan for Region 10*

Quality assurance (QA) and quality control (QC) ensure that an activity or project meets a required quality standard. QA is associated with record-keeping, tracking, audits and assessments, and involves determining the desired level of quality and setting limits in advance. QC is associated with the controls that are implemented while an activity is being performed.

2. Project Description

The US Department of Energy is leasing property at Hanford to BNFL Inc. for construction and operation of the RPP-WTP. The RPP-WTP will store and treat mixed waste currently stored in the Hanford Site tank system unit. The waste is divided into two categories for processing and disposal purposes: high-level waste (HLW) feed, which has a higher radionuclide and solids content, and low-activity waste (LAW) feed, which has a lower radionuclide and solids content. The LAW feed is generally the supernatant portion of the tank waste. The treatment processes are being designed to pretreat the LAW and HLW feeds, immobilize the waste feed in a glass matrix through vitrification, and treat the offgas to a level that protects human health and the environment.

BNFL Inc. will conduct sampling and analysis to characterize incoming waste feed and to assess the effectiveness of the treatment processes at the RPP-WTP. Figure 2-1 presents a simplified flow diagram showing the locations where samples will be collected for analytical testing.

Figure 2-1. Simplified Flow Diagram and Sample Locations

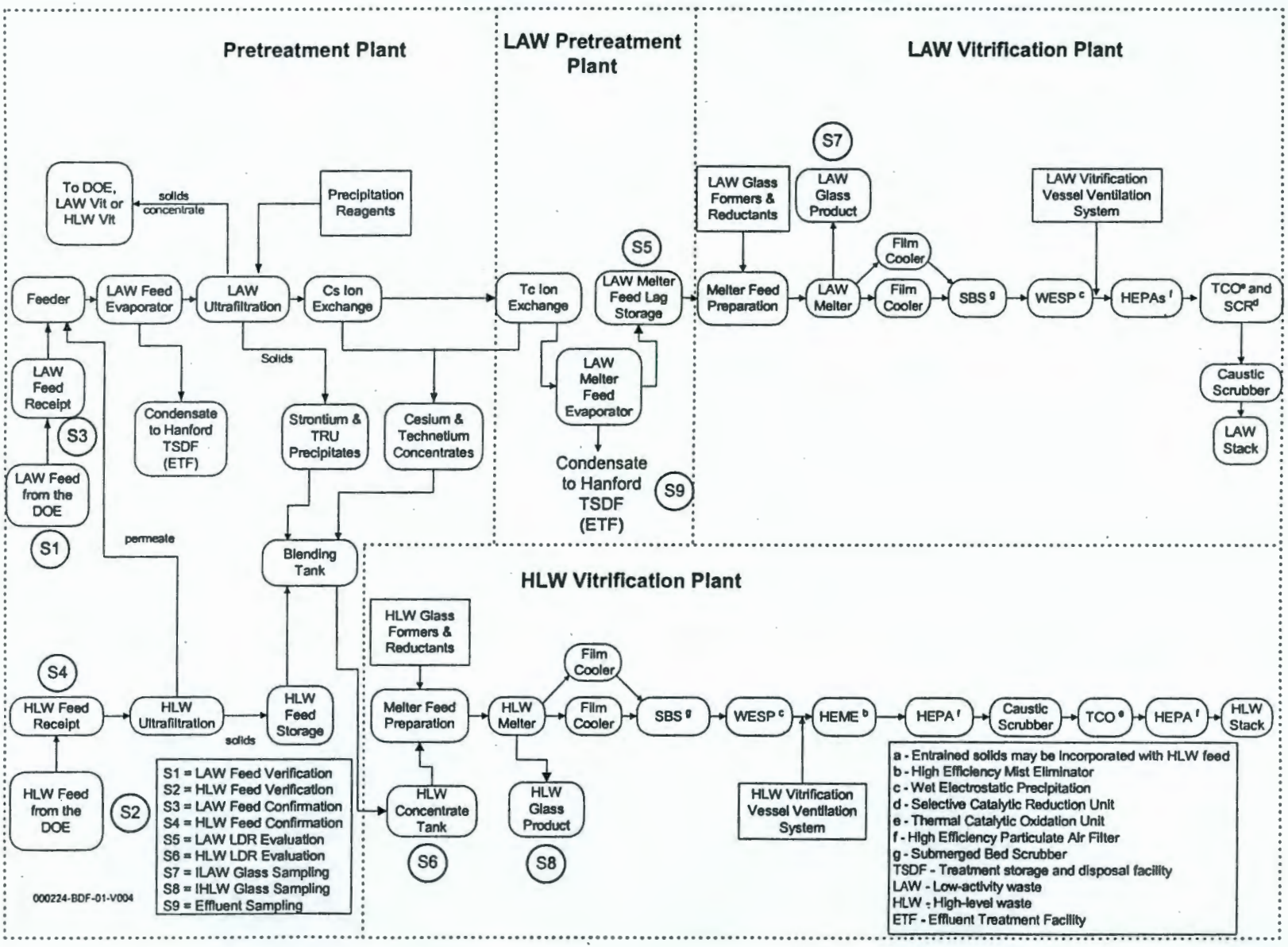

3. Constituents of Concern

The waste analysis plan (WAP) (BNFL 2000b) of the RPP-WTP dangerous waste permit application identifies the sampling locations and associated constituents of concern. These constituents are:

Waste acceptance criteria:

- Total organic carbon
- Separate visible organic layer
- Compatibility
- pH
- Polychlorinated biphenyls (PCBs)

Organics for LDR evaluation

- Benzene
- Carbon tetrachloride
- Chloroform
- 1,2-Dichloroethane
- 1,1-Dichloroethene
- 2,4-Dinitrotoluene
- Hexachlorobutadiene
- Hexachloroethane
- 2-Butanone (methyl ethyl ketone)
- Nitrobenzene
- PCBs
- Pyridine
- 1,1,2,2-Tetrachloroethene
- 1,1,2-Trichloroethylene
- 2,4,5-Trichlorophenol
- 1-Chloroethene (vinyl chloride)

Inorganics for LDR evaluation

- Antimony
- Beryllium
- Cyanide, total and amenable
- Nickel
- Thallium

Miscellaneous

- Reactive sulfide
- Reactive cyanide

4. Project Management

This section of the QAPjP addresses the following requirements:

- Project organization and responsibility
- Special training requirements
- Documentation and records
- Standard operating procedures

4.1. Project Organization and Responsibility

An example of the RPP-WTP management structure supporting sampling and analysis activities is depicted in Figure 4-1. These functions may change over the life of the facility.

The operations managers (or designates) for pretreatment and balance of facility, HLW vitrification and LAW vitrification, supported by the laboratory manager, will co-ordinate the execution of all sampling and analysis activities and ensure compliance with this QAPjP.

The RPP-WTP QA manager (or designate) reports directly to the BNFL Inc. QA manager and is matrixed to the president and CEO, Special Purpose Company. The RPP-WTP QA manager will provide oversight for compliance with this QAPjP by overseeing all the sampling, analytical laboratory activities, data review (including process knowledge) and reporting.

The shift managers (or designates) for pretreatment and balance of facility, HLW vitrification and LAW vitrification will be responsible for the activities associated with sampling.

The analytical laboratory manager (or designate) will ensure that analysis is conducted in accordance with this QAPjP. He will oversee the RPP-WTP onsite laboratory, and will be responsible for the coordination and technical oversight of any subcontracted laboratories. He will conduct periodic checks to verify that onsite and subcontracted laboratory activities are being performed in accordance with this QAPjP.

All subcontracted analytical laboratory managers will be responsible for ensuring that this QAPjP is implemented in their respective laboratories.

4.2. Special Training Requirements

Individuals involved in sampling, analysis or data review will have training and experience that enables them to implement the activities addressed in the WAP (BNFL 2000b) and this QAPjP in a safe manner. Individuals performing data validation will have analytical laboratory and data validation experience. Training will conform to training requirements specified in *Washington Administrative Code, Personnel Training* (WAC 173-303-330) as detailed in the RPP-WTP training plan (BNFL 1999).

Only individuals familiar with and trained in the requirements for waste acceptance criteria will approve waste shipments into the RPP-WTP. Evaluations will be performed by process engineers or chemists who are qualified to evaluate the waste for compatibility and acceptability for processing. Qualification criteria will include experience with radiochemistry, waste treatment analysis, RPP-WTP processing, and evaluating data for conformance with the dangerous waste requirements of the Washington State Department of Ecology.

RPP-WTP supervisors will be responsible for identifying any additional training requirements that apply to specific personnel or activities. These requirements may include the development of job descriptions, minimum education and experience requirements, and ongoing indoctrination and training needs. Any additional training required under the internal contractors' QA program plans will also be completed prior to beginning work. Training records will be maintained in accordance with section 4.3 of this document.

4.3. Documentation and Records

This section presents the requirements associated with the development, management and distribution of data and documents.

4.3.1. Document and Record Procedures

BNFL Inc. will follow procedures for the preparation, review, approval, distribution, use, control, revision and maintenance of documents. All documents and records generated, as part of the waste analysis program, will be controlled by procedures that will:

- Specify the required content and format of process control procedures, to maintain an operating environment that enables a consistent and controlled production of outputs
- Establish the minimum requirements for the review and approval of documents describing project activities, and specify the level of review for types of documents and the organization level of the reviewer(s) and approval signatures
- Describe the process for collection, maintenance, storage, retrieval and eventual storage or disposal of project documentation
- Communicate the method for researching, writing and producing project documents, including author qualifications, document formats and numbering, and an outline of content requirements
- Provide the practices for the definition, storage or disposal, and inventory requirements of project records
- Provide requirements related to processing incoming and outgoing correspondence, including capturing action items and commitments
- Control documents of all types that are received, generated or maintained by the project, including roles and responsibilities, a document distribution matrix and a document turnover and retention schedule
- Ensure that documents are formally controlled and submitted to project document control for logging, distribution and filing for future retrieval. It will include methods and forms for updating or changing documents

Organizations that generate or use data in an electronic format are responsible for establishing controls to ensure:

- Data input is complete and accurate
- Changes to data input are complete and accurate
- The security and integrity of the data are maintained

- Data retrieved satisfies the affected organization's needs

4.3.2. Document and Records Storage

Certain documents and records will be stored and maintained according to procedures that will be written as described above. These documents and records will include but not be limited to the following:

- Training (see section 4.2)
- Data report packages
  - Chain-of-custody forms
  - Sampling methods
  - Sampling conditions
  - Sample descriptions
  - Sample management records
  - Analytical methods
  - Data summary reports
  - QA and QC reports
- Assessment reports (including non-conformance and deficiency reports)
- Instrument inspection, maintenance and calibration logs
- Contractor deliverables
- Records and results of waste analysis, specifically:
  - Waste profiles
  - Waste verification
  - Waste confirmation
  - LDR evaluation
  - Waste acceptance
  - Waste non-conformance

4.4. Standard Operating Procedures

Standard operating procedures for waste sampling and analysis will be developed after the system design has been completed and before waste is received for processing.

Figure 4-1. RPP-WTP Sampling and Analysis Program Organization

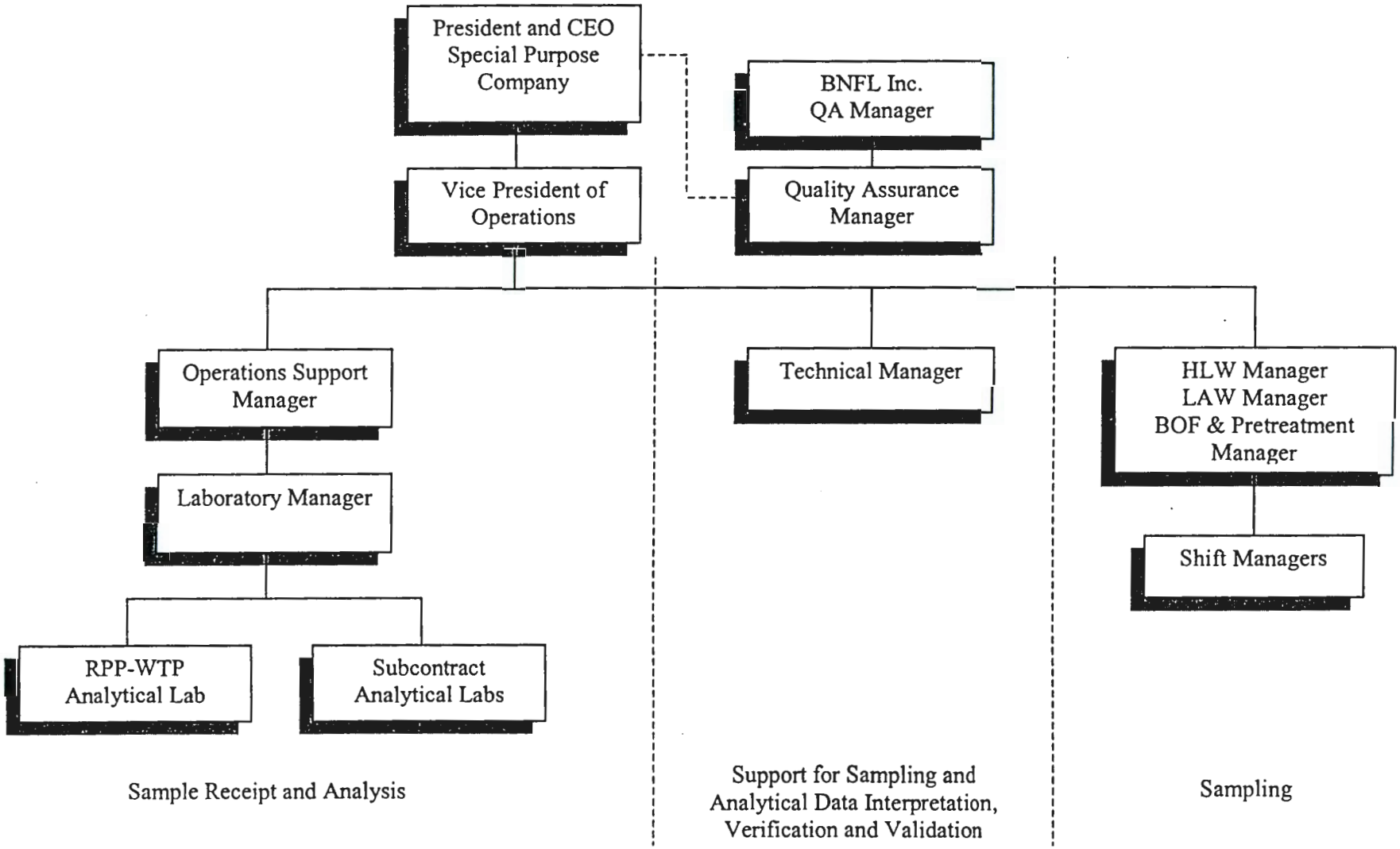

5. Quality Objectives and Criteria for Measurement Data

5.1. Data Quality Objectives

The seven-step procedure provided in *Guidance for the Data Quality Objectives Process* (EPA 1994) may be implemented to support the decision-making process, particularly when complex decisions such as LDR compliance need to be made using analytical data. Using the data quality objective process ensures that the data collected are of adequate quality and quantity to support the decision-making process. The seven steps of this process are identified in Table 5-1, along with a summary of the key activities that are performed under each step.

5.2. Data Quality Indicators

This section presents the specific calculations that will be used to determine the following data quality indicators:

- Analytical accuracy
- Analytical precision
- Representativeness

5.2.1. Analytical Measurement Accuracy

Accuracy can be estimated by calculating the percentage recovery of laboratory matrix spike samples using the following equation, described in *Preparation Aids for the Development of Category II Quality Assurance Project Plans* (EPA 1991):

$$\%R = \left(\frac{s - u}{C_{sa}}\right)100$$

Where

%R	=	percentage recovery
s	=	measured concentration in spiked laboratory aliquot
u	=	measured concentration in unspiked laboratory aliquot
C_{sa}	=	actual concentration of spike added

Accuracy can also be estimated by calculating percentage recovery for the use of standard reference materials or surrogates using the following equation, as outlined in *Preparation Aids for the Development of Category II Quality Assurance Project Plans* (EPA 1991):

$$\%R = \left(\frac{C_{m}}{C_{srm}}\right)100$$

Where

C_{m} = measured concentration of standard reference material or surrogate
C_{srm} = actual concentration of standard reference material or surrogate

Table 6-4 identifies those parameters for which accuracy will be estimated.

5.2.2. Analytical Precision

Precision can be estimated by analyzing matrix spikes and matrix spike duplicates. The relative percentage difference between the analytical results for the matrix spike samples and the matrix spike duplicate samples will be calculated as outlined in *Preparation Aids for the Development of Category II Quality Assurance Project Plans* (EPA 1991):

$$RPD = \frac{|S_{ms} - S_{msd}|}{\left(\frac{S_{ms} + S_{msd}}{2}\right)} \times 100$$

Where

RPD = relative percentage difference
S_{ms} = matrix spike sample
S_{msd} = matrix spike duplicate sample

Precision can also be estimated by analyzing duplicate samples. The relative percentage difference between the analyte levels measured in these samples will be calculated using the following equation, provided in *Preparation Aids for the Development of Category II Quality Assurance Project Plans* (EPA 1991):

$$RPD = \frac{(C_1 - C_2)}{\left(\frac{C_1 + C_2}{2}\right)} \times 100$$

Where

RPD = relative percentage difference
C_1 = larger of the two observed values
C_2 = smaller of the two observed values

Table 6-4 identifies those parameters for which precision will be estimated.

5.2.3. Representativeness

Representativeness is a qualitative QA objective which determines the degree to which a sample or group of samples is indicative of the subject being studied. It takes into account the size and volume of the sample, as well as the times and locations of sampling. The number of samples collected for the characterization of waste feed and secondary waste streams will be evaluated during the development of standard operating procedures, to ensure that it is representative of the total waste being sampled.

5.3. Detection Limits and Estimated Quantitation Limits

For analyses, the laboratory will establish the method detection limits (MDLs) and the estimated quantitation limits (EQLs) in conformance with SW-846 (EPA 1997) or other guidance.

The MDL is a matrix-independent statistical limit, defined as the minimum concentration of a substance that can be measured and reported with 99 percent confidence that the analyte concentration is greater than zero.

EQLs are defined as the lowest concentration that can reliably be achieved within specified limits of precision and accuracy during routine laboratory operating conditions. The EQL is generally five to 10 times the MDL. For many analytes, the EQL analyte concentration is selected as the lowest non-zero standard in the calibration curve. Sample EQLs are highly matrix-dependent. The EQLs in SW-846 (EPA 1997) are provided for guidance and may not always be achievable.

The MDLs and EQLs will be determined as defined by Chapter 1 of SW-846 (EPA 1997). The MDLs will include sample preparation methods, and will be determined by spiking uncontaminated water and solid (typically sand) with known concentrations.

The EQL is affected by:

- Sample matrix
- Sample volume or mass used
- Final concentrate volume or final digestate volume from sample preparation
- Amount introduced into the instrument for quantitation
- Use of dry or wet weight for reporting solids

Each US Environmental Protection Agency (EPA) method in SW-846 (EPA 1997) lists target EQLs in water, soil or both matrices. Water EQLs are lower than those in soil or waste. For various waste types, the methods list EQL multipliers relative to water or soil. The SW-846 methods stress that the EQL will differ by matrix, and should be evaluated by matrix.

Section 6.3 and Table 6-4 presents the project-specific analytical performance requirements.

5.4. Reporting Requirements

Data generated from laboratory analyses will be reported to BNFL Inc. in an organized format that contains all the supporting information required in the data report package for the appropriate level of data verification or validation. Refer to section 8 for a discussion of the data report package and to section 9 for a discussion of data verification and validation.

The reported data will identify the concentration units (such as milligrams per liter) and appropriate laboratory qualifiers. Data reported as non-detected will be referenced against a stated MDL or instrument detection limit value. Values between the MDL and the EQL will be qualified and documented. If selected reporting limits are used instead of EQLs or detection limits, the reporting limits will be consistent with the specific data reporting requirements presented throughout the WAP (BNFL 2000b).

Table 5-1. Data Quality Objective Seven Step Process

	Key Activities
Step 1: State the problem	• Identify the constituents of concern • Develop a conceptual site model • Formulate a concise problem statement
Step 2: Identify the decisions	• Identify the principle study questions that the study will attempt to resolve • Identify the alternative actions that may result once each of the principal study questions has been resolved • Integrate the principal study questions and alternative actions to form decision statements
Step 3: Identify required inputs	• Identify the information needed to resolve each decision statement • Define the source and level of quality for the information needed • Determine whether data of adequate quality already exist
Step 4: Define study boundaries	• Define the population of interest and the geographic area or volume to which each decision statement applies • Divide the population into statistically-based strata with relatively homogeneous characteristics • Define the temporal boundaries of the problem • Define the time frame to which each decision applies • Determine when to collect the data
Step 5: Develop a decision rule	• Define the statistical parameters (e.g., mean, upper confidence limit) • Determine the final action • Develop "if… then…" statements that incorporate the parameter of interest, scale of decision-making, action level, and actions that would result from the decision
Step 6: Specify tolerable limits on decision errors	• Define the expected concentration range for the analyte of interest • Identify the decision error • Define the null hypothesis • Select a statistical vs. nonstatistical sampling design • For statistical designs, define the boundaries of the gray region and set tolerable limits for decision error
Step 7: Optimize the design	<u>Non-statistical design</u> • Summarize applicable screening method alternatives • Summarize applicable sampling method alternatives • Develop an integrated screening or sampling design <u>Statistical design</u> • Identify statistical sampling design alternatives (e.g., simple random, stratified random) and select the preferred option • Select the statistical hypothesis test for testing the null hypothesis • Evaluate various design options by varying the decision error criteria and width of the gray region • Select the preferred sampling design

6. Data Acquisition and Measurement

This following section addresses the QA requirements for data acquisition and measurement.

6.1. Sampling Procedures and Management

Subsections 6.1.1 through 6.1.4 provide direction on the types of sampling procedures to be implemented and the types of equipment that may be used to support the sampling, as well as guidance on how to manage and document field activities.

6.1.1. Sampling Procedures and Design

The sampling procedures to be implemented for analyzing waste feed from the DST system unit, characterization of treated waste from the RPP-WTP, and characterization of secondary waste streams are described in the following sections. General sample requirements are shown in Table 6-1. Standard operating procedures for sample collection will be developed after the system design is complete and before waste is received for processing.

6.1.2. Selected Sampling Equipment

Equipment selected to support waste sampling activities will meet the requirements of the specific SW-846 method (EPA 1997) or other applicable guidance. If modifications of the procedure are needed, they will be requested in accordance with WAC 173-303-110.

When feasible, disposable equipment will be used to collect samples to obviate the need to decontaminate equipment after use. The process for decontamination of sampling equipment, when necessary, is presented in section 6.1.3.3.

6.1.3. Sample Handling and Shipping

Personnel involved in sampling will be required to have read and understood the operating procedures for sampling before implementing sampling activities. The sample preservation, containers and holding times for each of the types of analyses to be performed are specified in Table 6-2.

Storage conditions will be evaluated to ensure that the samples remain representative. Normally, samples will be transported to the analytical laboratory pneumatically.

A unique identification number generated by the laboratory information management system (LIMS) will be marked using bar code on all sample containers, before introducing the waste. This number will be recorded on the chain-of-custody form. The sample labeling and chain-of-custody documentation will be checked to ensure the traceability of each of the samples.

6.1.3.1. Chain-of-custody

The ability to demonstrate that samples were obtained from the locations specified in the applicable WAP (BNFL 2000b), and that they reached the laboratory without alteration, are key considerations for data resulting from laboratory analysis. Evidence of collection, shipment, reception at the laboratory, and laboratory custody until disposal will be documented using a chain-of-custody form. The chain-of-custody form will, as a minimum, supply the following information:

- Sample identification number
- Sampling date and time
- Sampling location
- Name of the sampler for manual sampling
- Shipping date
- Analyses to be performed
- Preservation method

A sample will be considered to be in custody when it is under any of the following conditions:

- In a person's possession
- In view, after having been in a person's physical possession
- Locked so that it cannot be tampered with, after having been in a person's physical custody
- Sealed with tamper-proof seal
- In a secured area, restricted to authorized personnel only

All chain-of-custody forms will be included in the final data report package. Electronic chain-of-custody forms and electronic signatures may be used.

The chain-of-custody practices for the RPP-WTP will address the following general requirements for custody records:

- Sample management planning will identify responsibilities, including interfaces between organizations for documenting possession of a sample from collection and identification through handling, preservation, shipment, transfer, analysis, storage and final use.

- Sample traceability will ensure that it can be tracked at all times from its collection through final use.

- Sample identification will be documented and checked before the sample is released for use.

- If individual samples have specific custody requirements, as required by documents such as the WAP (BNFL 2000b), test plans, study plans or job packages, these requirements will be implemented.

- For samples with limited use or storage life, methods will be established that preclude using an out-of-date sample.

Implementing documents will identify those representative samples that need to be archived.

6.1.3.2. Sample Preservation, Containers and Holding Time

Table 6-2 presents the sample preservation, container and holding time requirements for different types of analyses.

6.1.3.3. Maintaining and Decontaminating Field Equipment

Field equipment used to support waste monitoring and sampling activities will be maintained in accordance with manufacturer guidelines, and will be decontaminated prior to use. Disposable sampling equipment will be used whenever possible due to the high concentrations of radionuclides in the waste materials to be sampled.

Equipment decontamination will be performed in accordance with guidance provided in the following references or as the manufacturer recommends:

- EPA. 1997. *Test Methods for Evaluating Solid Waste - Physical/Chemical Methods*, SW-846, Third Edition as amended by updates. US Environmental Protection Agency, Washington, D.C., USA.

- EPA. 1987. *A Compendium of Superfund Field Operations Methods*, EPA/540/P-87/001b. US Environmental Protection Agency, Washington, D.C., USA.

6.1.4. Sampling Quality Assurance and Quality Control Procedures

The technical manager (or designate) will be responsible for developing sampling procedures and conducting periodic surveillances, to verify that sampling is being conducted in accordance with this QAPjP. In addition, an internal surveillance and audit will be conducted by the RPP-WTP QA manager (or designate) to ensure further that sampling and laboratory activities are meeting the requirements of this QAPjP.

All planned and unintentional deviations from established procedures will be reviewed and documented to determine their possible impacts on data quality. Field records and documentation, including field measurements, will be handled and preserved in a manner consistent with section 4.3 of this QAPjP.

Quality assurance surveillances and internal audits, corrective actions, and root cause analyses will be implemented as described in section 7.1 of this document.

Sampling QC procedures may involve the collection of trip blanks, field blanks, equipment rinsate blanks and duplicate samples. The purpose and frequency of collection for each of these samples are presented in Table 6-3, together with sampling QC objectives.

6.2. Instrument and Equipment Calibration, Testing, Inspection and Maintenance

The following section addresses instrument calibration, testing, inspection and maintenance requirements.

6.2.1. Instrument Calibration Frequency

The RPP-WTP laboratory manager (or designate) will ensure that all instruments are calibrated in accordance with the requirements specified by specific SW-846 procedures (EPA 1997) or the manufacturer's recommendations. Instrument calibration records will be managed in accordance with section 4.3.

6.2.2. Instrument and Equipment Testing, Inspection and Preventive Maintenance Requirements

The RPP-WTP laboratory manager (or designate) will ensure that laboratory instruments are routinely tested and inspected to confirm that they are in proper working order. Preventive maintenance schedules recommended by the equipment manufacturer will be implemented and documented.

6.3. Sample Preparation Methods, Analytical Procedures and Analytical Performance Requirements

The sample preparation methods, analytical procedures and performance requirements (such as EQL, precision, and accuracy) for organic and inorganic analyses are summarized in Table 6-4, and are consistent with the requirements specified in SW-846 methods (EPA 1997) or other applicable guidance. In cases where one or more constituents of concern are not covered by the standard SW-846 methods, the methods will be modified, or alternative EPA or other methods will be used as described in *Regulatory Data Quality Objectives Supporting Tank Waste Remediation System Privatization Project* (PNNL 1998).

6.4. Information Management

The plant information network will be a database management system. It will be part of the integrated control network and will include the LIMS, the waste tracking and inventory system, the maintenance management system, and the manufacturing resource planning system. The plant information network interfaces with the auto-sampling control system via the facility network infrastructure, to acquire the necessary data to satisfy operations, regulators and customers.

All final sample and QC data reported in contractor deliverables will be stored and maintained in the LIMS database. As a minimum, this database will hold the sample number, sample collection date, analysis date, analytical methods employed, analytical results and validation qualifiers. For a more complete description of the LIMS, refer to section 6 of the WAP (BNFL 2000b).

6.5. Laboratory Quality Control

Laboratory QC procedures will involve the analysis of duplicates, method blanks and matrix spike samples. The purpose and frequency for each of these samples is presented in Table 6-5.

Table 6-1. Proposed Sampling Methods

Waste Category	Waste Type	Type of Sample
DST system unit feed waste	Verification sample	Representative split sample from the Department of Energy
	Confirmation sample	Representative grab sample from circulating system
Solid	**Mixed Waste Streams**	
	HLW glass residue	Grab
	Entrained solids	Grab
	Spent ion exchange resin	Grab
	Offgas treatment system equipment and components	Grab or smear
	Out-of-service equipment	Grab or smear
	Dangerous or Mixed Waste Streams	
	Laboratory waste	Grab
	Maintenance waste	Grab
	Used personal protective equipment	Grab
Liquid	**Mixed Waste Streams**	
	LAW feed evaporator condensate[a]	Grab
	LAW melter feed evaporator condensate[a]	Grab
	HLW offgas condensate[a]	Grab
	LAW melter offgas scrubber blowdown[a]	Grab
	Technetium process condensate[a]	Grab
	Technetium ion exchange rinse water[a]	Grab
	Plant wastewater containing DST waste [a]	Grab
	Dangerous or Mixed Waste Streams	
	Maintenance waste	Grab
	Off-specification chemicals	Grab

[a]These aqueous waste streams are collected in the effluent mixing tank prior to sampling.

Table 6-2. Sample Preservatives, Containers, and Holding Times

Analysis	Container	Minimum Sample Size[a]	Preservative	Holding Time
Liquid Samples				
Volatile organic compounds	Gas-tight plastic	5 mL	Cool to 4 °C	14 days
PCB[b] compounds	Plastic	10 mL	Cool to 4 °C	7 days (extraction) 40 days (analysis)
Total organic carbon	Plastic	1 mL	H_2SO_4 to pH<2 Cool to 4 °C	28 days
pH	Plastic	5 mL	None	Immediately
Visible separate organic layer	Plastic	15 mL	Cool to 4 °C	14 days
Compatibility	Plastic	10 mL	None	Not applicable
Metals	Plastic	1 mL, metals 1 mL, Hg	HNO_3 to pH<2. Cool to 4°C	180 days, metals 28 days, Hg
TCLP[c] analysis	Plastic	10 mL	None	14 days (initial extractions)
Reactivity (cyanide and sulfide)	Plastic	20 mL	HNO_3 to pH<2	14 days
Solid Samples				
Volatile organic compounds	Gas tight plastic	5 g	Cool to 4 °C	48 hrs preserve at laboratory
PCB[b] compounds	Plastic	0.5 g	Cool to 4 °C	14 day (extraction) 40 days (analysis)
Total organic carbon	Plastic	0.1 g	Cool to 4 °C	28 days
pH	Plastic	5 g	None	As soon as possible
Metals	Plastic	2 g	None	180 days Hg at 28 days
TCLP[c] analysis	Plastic	5 g	None	14 days (initial extraction)

Notes:
[a] Minimum sample size subject to change based on ALARA ("as low as reasonably achievable") philosophy
[b] PCB = Polychlorinated biphenyls
[c] TCLP = Toxicity characteristic leaching procedure

Table 6-3. Field Quality Control Sampling

Sample Type	Frequency	Purpose
Water blank	The frequency will be determined and documented in operating procedures before sampling operations are begun.	This will be a water sample which receives the same analysis steps as the sample for the specified procedure. The blank will confirm that the water is not contaminated.
Equipment blank		A sample of analyte-free water used to rinse the sampling equipment. It is used to document of adequate decontamination of sampling equipment[a]. Analysis will be for tests performed for the specified procedure.
Duplicate		This QC sample is a second aliquot of the collected sample and is used to determine method precision.

[a]Decontamination will be performed if disposable equipment cannot be used.

Table 6-4. Analytical Method Requirements

CAS# [a]	Constituent of Concern	TC Limit [b] (mg/L)	UHC Limit (mg/L)	EQL [c] (mg/L)	SW-846 Method [d]		Precision	Accuracy
					Solid	Liquid		
None	Total organic carbon	NA [e]	-	10	9060	9060	± 20 %	± 20 %
None	Separate visible organic layer	NA [e]	NA [e]	NA [e]	NA [e]	TBD	TBD	TBD
None	Compatibility, as Δ °C	NA [e]	NA [e]	± 1	NA [e]	ASTM D 5058-90	NA [e]	± 10 %
None	pH	NA [e]	NA [e]	± 0.1	9040B/EPA 150.1	9041A/ EPA 150.1	± 5 %	± 5 %
1336-36-3	Polychlorinated biphenyls (PCBs) [f]	NA [e]	NA [e]	3.3	3550B/8082	3510C/8082	± 20 %	± 20 %
75-35-4	1,1-Dichloroethene [D029]	0.7	-	0.2	5035/8260B	5030B/8260B	± 30 %	± 30 %
107-06-2	1,2-Dichloroethane [D028]	0.5	-	0.1	5035/8260B	5030B/8260B	± 30 %	± 30 %
121-14-2	2,4-Dinitrotoluene [D030]	0.13	-	0.2	3550B/8270C	3510C (or 3580A)/8270C	± 30 %	± 30 %
95-95-4	2,4,5-Trichlorophenol [D041]	400.0	-	133	3550B/8270C	3510C (or 3580A)/8270C	± 30 %	± 30 %
71-43-2	Benzene [D018]	0.5	-	0.1	5035/8260B	5030B/8260B	± 30 %	± 30 %
56-23-5	Carbon tetrachloride [D019]	0.5	-	0.1	5035/8260B	5030B/8260B	± 30 %	± 30 %
67-66-3	Chloroform [D022]	6.0	-	2.0	5035/8260B	8260B	± 30 %	± 30 %
87-68-3	Hexachlorobutadiene [D033]	0.5	-	0.1	3550B/8270C	3510C (or 3580A)/8270C	± 40 %	± 40 %
67-72-1	Hexachloroethane [D034]	3.0	-	1.0	3550B/8270C	3510C (or 3580A)/8270C	± 40 %	± 40 %
78-93-3	Methyl ethyl ketone [D035] (2-Butanone)	200	-	67.0	5035/8260B	5030B/8260B	± 30 %	± 30 %
98-95-3	Nitrobenzene [D036]	2.0	-	0.7	3550B/8270C	3510C/8270C	± 40 %	± 40 %
110-86-1	Pyridine [D038]	5.0	-	5.0	3550B/8270C	3510C (or 3580A)/8270C	± 40 %	± 40 %
127-18-4	Tetrachloroethylene [D039]	0.7	-	0.2	5035/8260B	5030B/8260B	± 30 %	± 30 %
79-01-6	Trichloroethylene [D040]	0.5	-	0.1	5035/8260B	5030B/8260B	± 30 %	± 30 %
75-01-4	Vinyl chloride [D043]	0.2	-	0.1	5035/8260B	5030B/8260B	± 30 %	± 30 %

Table 6-4. Analytical Method Requirements

CAS# [a]	Constituent of Concern	TC Limit [b] (mg/L)	UHC Limit (mg/L)	EQL [c] (mg/L)	SW-846 Method [d]		Precision	Accuracy
					Solid	Liquid		
7440-36-0	Antimony	-	1.15	0.4	3050B,3051/ 6010B or 6020A	3010/6010B	± 20 %	± 20 %
7440-41-7	Beryllium	-	1.22	0.4	3050B,3051/ 6010B or 6020A	3010/6010B	± 20 %	± 20 %
57-12-5	Cyanides, total	-	590	197	[g]	[g]	± 20 %	± 20 %
57-12-5a	Cyanides, amenable	-	30	10	[g]	[g]	± 20 %	± 20 %
7440-02-0	Nickel	-	11	3.6	3050B,3051/ 6010B or 6020A	3010/6010B	± 20 %	± 20 %
7440-28-0	Thallium	-	0.2	0.	3050B,3051/ 6010B or 6020A	3010/6010B	± 20 %	± 20 %
	Reactivity	**Limit: (mg/kg of waste)**						
None	Reactive cyanide	250	NA [e]	84	[h] / 9014	[h] / 9014	± 20 %	± 20 %
None	Reactive sulfide	500	NA [e]	167	[i] / 9034	[i] / 9034	± 20 %	± 20 %

Notes:
[a] CAS – Chemical Abstracts Service
[b] TC – toxicity characteristic
[c] EQL – estimated quantitation limit
[d] EPA. 1997. *Test Methods for Evaluating Solid Waste - Physical/Chemical Methods*, SW-846, Third Edition as amended by updates. EPA, Washington, D.C., USA., unless otherwise specified.
[e] NA – not applicable
[f] PCBs have a limit of 50 parts per million.
[g] The methods for determination of total and amenable cyanide, as recommended in the current SW-846, allow for either of the following preparation and analysis sequences:
a) 9013 followed by 9010B for distillation, followed by either 9014 by titration or manual colorimetric analysis or 9213 by selected ion electrode for analysis
b) 9013 for preparation followed by 9012A for distillation and automated calorimetric analysis
[h] Sample preparation and hydrogen cyanide generation is according to SW-846, Chapter 7 section 7.3.3, *Interim Guidance For Reactive Cyanide.*
[i] Sample preparation and hydrogen sulfide generation is according to SW-846, Chapter 7, section 7.3.4, *Interim Guidance For Reactive Sulfide.*
Note: The EPA has withdrawn the test methods for reactive cyanide and reactive sulfide; however, these tests are still recognized by Washington State Department of Ecology.

Table 6-5. Laboratory Quality Control Requirements

Sample Type	Frequency	Purpose
Duplicate	The frequency will be determined and documented in operating procedures before analytical operations are begun.	This QC sample is a second aliquot of the collected sample and is used to determine method precision.
Method blank		An analyte-free matrix to which all reagents are added in the same volumes or proportions as those used in sample processing. It is used to document contamination resulting from the analytical process. This method blank will be carried through the complete sample preparation and analytical procedure.
Matrix spike or matrix spike duplicate		This QC sample is spiked with known quantities of analytes. The QC spike ensures that the analysis is testing for the specified analyte.

7. Performance Assessments, Corrective Actions and Evaluations

The following subsections address assessment and oversight requirements.

7.1. Routine Laboratory Assessment and Corrective Actions

The RPP-WTP laboratory manager (or designate) will be responsible for conducting surveillance at least annually to verify that sampling and analysis are being performed in accordance with this QAPjP. In addition, an internal surveillance and audit will be conducted by the RPP-WTP QA manager (or designate) to ensure further that sampling and laboratory activities are meeting the requirements of this QAPjP. Each surveillance, internal audit, corrective action and root cause analysis will be implemented according to approved procedures.

7.2. Data Reduction and Validation

Data reduction and validation procedures will be developed for data generated for environmental compliance according to the requirements of the current version of SW-846 (EPA 1997) or other applicable guidance, prior to the operation of the analytical laboratory. Refer to section 9.

7.3. Reports to Management

All conditions identified as having an adverse effect on quality, the significance of such conditions, and corrective actions, as determined by the QA manager, will be documented and reported to the appropriate level of management.

The assessment reports may include the following items, as appropriate:

- Deviations from the requirements specified in the QAPjP.
- Limitations or constraints on the applicability of the resulting analytical data.
- Results of technical systems and performance evaluation QC audits.
- Assessments of data quality in terms of MDLs, precision, accuracy and representativeness. The quantitative performance indicators for precision and accuracy are given in Table 6-4.

8. Data Report Packages

The data reports received from the laboratory will serve as documentation of an analytical project. The primary data reporting will be by electronic systems. An example of the information contained in data reports documenting environmental support activities is as follows:

- Sample identifications
- Holding times, including
  - Sampling date
  - Date the laboratory received the sample
  - Extraction or preparation date
  - Analysis date
  - Re-extraction or re-analysis dates
- Analytical parameters
- QA, including
  - Descriptions of procedures and methods used to generate the results
  - Deviations from procedures
  - Analytical anomalies for raw data results, spikes, surrogates and method blanks
  - Analytical qualifiers
  - Calibration and instrument tuning
  - Corrective actions implemented
- Raw analytical data, as appropriate
- Chain-of-custody, as appropriate

9. Verification and Validation of Analytical Data

The data verification and validation processes will ensure that the data resulting from the selected analytical method are consistent with the requirements specified in this QAPjP.

9.1. Data Verification

The primary data reporting will be by electronic data systems. Data verification will be performed on all data packages received from the laboratory in support of environmental compliance, to ensure that their content is complete and in order. Data verification will be performed as follows:

- Review the data package page by page to verify that it is paginated and contains all the required technical information.
- Document any deficiencies identified during the review.
- Where deficiencies are identified, contact the laboratory to have the appropriate revisions made.
- Replace deficient pages with the laboratory corrections.
- Track data package revisions.
- Place a copy of the completed verification report in the data file.

9.2. Data Validation

Data validation ensures that the data resulting from analytical measurements meet the quality requirements specified in this QAPjP. It will be performed on data packages that support environmental compliance.

A validation plan will be developed and implemented prior to the operation of the laboratory, according to guidance found in SW-846, chapter 4, (EPA 1997) or other appropriate guidance.

10. Data Quality Assessment

Data obtained will be evaluated to determine whether they are of the appropriate type, quality and quantity to support their intended use. Such data quality assessment will be performed, in accordance with *Guidance for Data Quality Assessment* (EPA 1996), on data packages used to ensure compliance with LDR and waste acceptance criteria.

References

BNFL. 1999. *TWRS Privatization Training and Development Plan – Design Confirmation,* PL-W375-TR00001, Rev. 0, 25 February 1999. BNFL Inc., Richland, Washington, USA.

BNFL. 2000a. *River Protection Project - Waste Treatment Plant Dangerous Waste Permit Application,* BNFL-5193-RCRA-01, Revision 1, 31 March 2000. BNFL Inc., Richland, Washington, USA.

BNFL. 2000b. *River Protection Project - Waste Treatment Plant Waste Analysis Plan,* PL-W375-EN00006, Revision 0, 31 March 2000. BNFL Inc., Richland, Washington, USA.

EPA. 1987. *A Compendium of Superfund Field Operations Methods*, EPA/540/P-87/001b. US Environmental Protection Agency, Washington, D.C., USA.

EPA. 1991. *Preparation Aids for the Development of Category II Quality Assurance Project Plans*, EPA/600/8-91/004. US Environmental Protection Agency, Washington, D.C., USA.

EPA. 1992. *Quality Management Program Plan for Region 10*, DCN RQMP-001/92. US Environmental Protection Agency, Region 10, Washington, D.C., USA.

EPA. 1994. *Guidance for the Data Quality Objectives Process*, EPA QA/G-4, September 1994. US Environmental Protection Agency, Washington, D.C., USA.

EPA. 1996. *Guidance for Data Quality Assessment*, EPA QA/G-9. US Environmental Protection Agency, Washington, D.C., USA.

EPA. 1997. *Test Methods for Evaluating Solid Waste, Physical Chemical Methods*, SW-846, Third Edition as amended. US Environmental Protection Agency, Washington, D.C., USA.

EPA. 1998. *EPA Guidance for Quality Assurance Project Plans*, EPA QA/G-5, February 1998. US Environmental Protection Agency, Washington, D.C., USA.

PNNL. 1998. *Regulatory Data Quality Objectives Supporting Tank Waste Remediation System Privatization Project*, PNNL-12040, Rev. 0. Pacific Northwest National Laboratory, Richland, Washington, USA.

WAC 173-303. *Dangerous Waste Regulations*, Washington Administrative Code.

Appendix 4A

Appendix 4A
Engineering Support Documents

Appendix 4A
Engineering Support Documents

The documents listed below and the engineering drawings in Tables A-1a and A-1b provide supplementary information to Chapter 4. This appendix provides the reader with an information bridge to where this supporting material is located.

Location	Title	Document Number
Supplement 1	Final Work Plan for Screening Level Risk Assessment for the RPP-WTP	RPT-W375-EN00001, Rev. 1
Supplement 2	Environmental Performance Demonstration Plan	PL-W375-EN00003, Rev. 1
Supplement 3	Quality Assurance Project Plan for the Environmental Performance Demonstration	QP-W375-EN00001, Rev. 0
Supplement 4	Seismic Analysis and Design Approach	RPT-W375-RU00005, Rev. D
Supplement 5	Worked Example for Vessel V13024A	RPT-W375PT-PR00014, Rev. 1
Supplement 6	Flowsheet Results for Envelope A/D at 60 t/d LAW	RPT-W375-TE00019, Rev. 0
Supplement 7	Waste Compatibility and Structural Integrity of System Vessels	RPT-W375-EN00003, Rev. 1
Supplement 8	Completion Schedule	
Supplement 9	Engineering Drawings	
Supplement 10	Business Sensitive and Confidential Engineering Drawings	
Supplement 11	Report of Pre-Submittal Meeting	CCN 012313
Supplement 12	State Environmental Policy Act Environmental Checklist for the River Protection Project - Waste Treatment Plant	RPT-W375-EN00014, Rev. 1
Appendix 4D	Treatment Effectiveness Report for Miscellaneous Units	
Appendix 4E	Subpart AA Analysis	CCN 011419
Appendix 4F	Detailed Engineering Descriptions	
Appendix 4G	Business Sensitive and Confidential Engineering Descriptions	

Table A-1a. Design Media Tracking (sorted by system/facility)

Facility	System Number	Title	Document Number	Location
General	General	Process Flow Diagram Symbols and Legends	DWG-W375PT-PR00001	Supplement 9
General	General	Mechanical Handling Symbols and Legends Sheet 1 of 2	DWG-W375SH-J00001	Supplement 9
General	General	Mechanical Handling Symbols and Legends Sheet 2 of 2	DWG-W375SH-J00008	Supplement 9
General	General	P&ID Symbols and Legends 1 of 5	DWG-W375-M00001	Supplement 9
General	General	P&ID Symbols and Legends 2 of 5	DWG-W375-M00002	Supplement 9
General	General	P&ID Symbols and Legends 3 of 5	DWG-W375-M00003	Supplement 9
General	General	P&ID Symbols and Legends 4 of 5	DWG-W375-M00004	Supplement 9
General	General	P&ID Symbols and Legends 5 of 5	DWG-W375-M00005	Supplement 9
PT	110	Process Flow Diagram LAW Feed Receipt System PT-110	DWG-W375PT-PR00017	Supplement 9
PT	120	Process Flow Diagram LAW Feed Evaporation System PT-120	DWG-W375PT-PR00003	Supplement 9
PT	210	Process Flow Diagram HLW Feed Receipt and Pre-Treatment System 210/220	DWG-W375PT-PR00016	Supplement 9
PT	220	Process Flow Diagram HLW Feed Receipt and Pre-Treatment System 210/220	DWG-W375PT-PR00016	Supplement 9
PT	230	Process Flow Diagram LAW Ultrafiltration System PT-230	DWG-W375PT-PR00004	Supplement 9
PT	310	Process Flow Diagram Cesium Removal Using Ion Exchange System PT-310	DWG-W375PT-PR00005	Supplement 9
PT	320	Process Flow Diagram Cesium Nitric Acid Recovery System PT-320	DWG-W375PT-PR00009	Supplement 9
PT	360	Process Flow Diagram Cesium Fresh Resin AdditionSystem PT-360	DWG-W375PT-PR00011	Supplement 9
PT	410	Pretreatment System 410 Level 1 Mechanical Handling Diagram Incell Handling	DWG-W375PT-M00331	Supplement 9
PT	420	Pretreatment System 420 Level 1 Mechanical Handling Diagram Incell Mechanical Equipment	DWG-W375PT-M00332	Supplement 9
PT	430	Pretreatment System 430 Level 1 Mechanical Handling Diagram Incell Decontamination	DWG-W375PT-M00333	Supplement 9
PT	430	Pretreatment System 430 Maintenance Facility Decontamination Vessels	DWG-W375PT-M00402	Supplement 9
PT	440	Pretreatment System 440 Level 1 Mechanical Handling DiagramOutcell Handling	DWG-W375PT-M00334	Supplement 9
PT	450	Pretreatment System 450 Level 1 Mechanical Handling Diagram Outcell Mech. Equipment	DWG-W375PT-M00335	Supplement 9
PT	540	Process Flow Diagram Pretreatment Vessel Vents System PT-540/770	DWG-W375PT-PR00014	Supplement 9
PT	550	Process Flow Diagram Pretreatment Effluent Collection System PT-550	DWG-W375PT-PR00015	Supplement 9
PT	700	V&ID Overall Pretreatment Building	DWG-W375PT-HV00001	Supplement 9
PT	GA	Pretreatment Building General Arrangement Plan AT 0'-0"	DWG-W375PT-PL00009	Supplement 9
PT	GA	Pretreatment Building General Arrangement Plan AT 20'-0"	DWG-W375PT-PL00010	Supplement 9
PT	GA	Pretreatment Building General Arrangement Plan AT 56'-0"	DWG-W375PT-PL00011	Supplement 9
PT	GA	Pretreatment Building General Arrangement Plan AT 77'-0"	DWG-W375PT-PL00012	Supplement 9

Table A-1a. Design Media Tracking
(sorted by system/facility)

Facility	System Number	Title	Document Number	Location
PT	GA	Pretreatment Building General Arrangement Plan AT 98'-0"	DWG-W375PT-PL00013	Supplement 9
PT	GA	Pretreatment Building General Arrangement Plan AT 119'-0"	DWG-W375PT-PL00014	Supplement 9
PT	GA	Pretreatment Building General Arrangement Sections A and B	DWG-W375PT-PL00015	Supplement 9
PT	GA	Pretreatment Building General Arrangement Sections C and D	DWG-W375PT-PL00016	Supplement 9
PT	GA	Pretreatment Building General Arrangement Sections E and F	DWG-W375PT-PL00018	Supplement 9
PT	GA	Pretreatment Building General Arrangement Sections G and H	DWG-W375PT-PL00019	Supplement 9
PT	GA	Pretreatment Building General Arrangement Sections J and K	DWG-W375PT-PL00020	Supplement 9
PT	GA	Pretreatment Building General Arrangement Plan AT (-)50'-0"	DWG-W375PT-PL00022	Supplement 9
LP	130	Process Flow Diagram LAW Melter Feed Evaporation System LP-130	DWG-W375LP-PR00008	Supplement 9
LP	140	Process Flow Diagram LAW Melter Feed Lag Storage System LP-140	DWG-W375LP-PR00009	Supplement 9
LP	330	Process Flow Diagram Technetium Removal Using Ion Exchange System LP-330	DWG-W375LP-PR00006	Supplement 9
LP	340	Process Flow Diagram Technetium Eluant Recovery System LP-340	DWG-W375LP-PR00010	Supplement 9
LP	365	Process Flow Diagram Technetium Fresh Resin Addition System LP-365	DWG-W375LP-PR00021	Supplement 9
LP	370	Process Flow Diagram Spent Resin Collection & Dewatering System LP-370	DWG-W375LP-PR00012	Supplement 9
LP	410	System 410 Spent Resin Waste Handling System Level 1 MHD - Sheet 1	DWG-W375LP-M00218	Supplement 9
LP	410	System 410 Spent Resin Waste Handling System Level 1 MHD - Sheet 2	DWG-W375LP-M00219	Supplement 9
LP	410	System 410 Spent Resin Waste Handling System Level 1 MHD - Sheet 3	DWG-W375LP-M00220	Supplement 9
LP	510	Process Flow Diagram LAW Pretreatment Effluent Collection System LP-510/550	DWG-W375LP-PR00002	Supplement 9
LP	540	Process Flow Diagram LAW Pretreatment Vessel Vents System LP-540/770	DWG-W375LP-PR00005	Supplement 9
LP	550	Process Flow Diagram Plant Wash and Drain Collection System 550	DWG-W375LP-PR00002	Supplement 9
LP	700	V&ID Overall Pretreatment Building	DWG-W375LP-HV00001	Supplement 9
LP	GA	LAW Pretreatment Plant General Arrangement Plan at (-)30' - 0"	DWG-W375LP-PL00001	Supplement 9
LP	GA	LAW Pretreatment Plant General Arrangement Plan at 0' - 0"	DWG-W375LP-PL00002	Supplement 9
LP	GA	LAW Pretreatment Plant General Arrangement Plan at 25' - 0"	DWG-W375LP-PL00003	Supplement 9
LP	GA	LAW Pretreatment Plant General Arrangement Plan at 55' - 0"	DWG-W375LP-PL00004	Supplement 9
LP	GA	LAW Pretreatment Plant General Arrangement Plan at 75' - 0"	DWG-W375LP-PL00005	Supplement 9
LP	GA	LAW Pretreatment Plant General Arrangement Plan at 96' - 0"	DWG-W375LP-PL00006	Supplement 9
LP	GA	LAW Pretreatment Plant General Arrangement Section A Looking East	DWG-W375LP-PL00007	Supplement 9
LP	GA	LAW Pretreatment Plant General Arrangement Section B Looking East	DWG-W375LP-PL00008	Supplement 9
LP	GA	LAW Pretreatment Plant General Arrangement Section C Looking East	DWG-W375LP-PL00009	Supplement 9
LP	GA	LAW Pretreatment Plant General Arrangement Section D Looking East	DWG-W375LP-PL00010	Supplement 9
LP	GA	LAW Pretreatment Plant General Arrangement Section E Looking East	DWG-W375LP-PL00011	Supplement 9

Table A-1a. Design Media Tracking (sorted by system/facility)

Facility	System Number	Title	Document Number	Location
LV	060	LAW Vitrification System 060 Design Proposal Drawing Product Container Weldment Details	DWG-W375LV-M00241	Supplement 9
LV	060	LAW Vitrification System 060 Design Proposal Drawing Product Container Top Head & Lid Details	DWG-W375LV-M00242	Supplement 9
LV	060	LAW Vitrification System 060 Design Proposal Drawing Product Container Bottom Head & Body Details	DWG-W375LV-M00243	Supplement 9
LV	110, 131	Process Flow Diagram LAW Vitrification Feed Preparation	DWG-W375LV-PR01001	Supplement 9
LV	211	LAW Vitrification System 211, 212, 213 Design Proposal Drawing Locally Shielded Melter Assembly	DWG-W375LV-M00470	Supplement 10
LV	211	Process Flow Diagram LAW Vitrification, Melter 1 and Offgas Quenching	DWG-W375LV-PR01002	Supplement 9
LV	221	LAW Vitrification System 221 Mech Handling Diagram Glass Pour System	DWG-W375LV-M00490	Supplement 9
LV	231/234	Process Flow Diagram LAW Vit Primary and Secondary Offgas Treatment	DWG-W375LV-PR01005	Supplement 9
LV	231/234	LAW Melter 2 Offgas Quenching	DWG-W375LV-PR01003	Supplement 9
LV	231/234	LAW Melter 3 Offgas Quenching	DWG-W375LV-PR01004	Supplement 9
LV	231/234	Primary and Secondary Offgas Treatment	DWG-W375LV-PR01005	Supplement 9
LV	244	LAW Vitrification System 244 Mechanical Handling Diagram Melter Cave Support	DWG-W375LV-M00673	Supplement 9
LV	311	LAW Vitrification System 311 MHD LVL 1 Product Container Receipt and Transfer Line 1	DWG-W375LV-M00111	Supplement 9
LV	313	LAW Vitrification System 313 Mechanical Handling Diagram Level 1 Product Container Pour Cave Transfer	DWG-W375LV-M00113	Supplement 9
LV	314	LAW Vitrification System 314 Mechanical Handling Diagram Level 1 Product Container Buffer Store	DWG-W375LV-M00114	Supplement 9
LV	321	LAW Vitrification System 321 Mech Handling Diagram Level 1 Inert Fill and Container Lid Weld Area	DWG-W375LV-M00951	Supplement 9
LV	331	LAW Vitrification System 331 Mech. Handling Diagram 1 Decontamination, Swabbing, & Monitoring	DWG-W375LV-M00736	Supplement 9
LV	331	LAW Vitrification System 331 Mech. Handling Diagram 1 Line Transfer Station	DWG-W375LV-M00737	Supplement 9
LV	331	LAW Vitrification System 331 Mech. Handling Diagram 1 Fixative Station	DWG-W375LV-M00738	Supplement 9
LV	331	Process Flow Diagram LAW Vitrification Container Decontamination	DWG-W375LV-PR01009	Supplement 9
LV	340	LAW Vitrification System 340 Mech Handling Diagram Level 1 Storage & Swabbing	DWG-W375LV-M00791	Supplement 9

Table A-1a. Design Media Tracking (sorted by system/facility)

Facility	System Number	Title	Document Number	Location
LV	421	LAW Vitrification System 411 Mechanical Handling Diagram LSM Transport	DWG-W375LV-M00387	Supplement 9
LV	431	LAW Vitrification System 431 MHD Level I Consumable Import/Export	DWG-W375LV-M00860	Supplement 9
LV	450	LAW Vitrification System 450 Mechanical Handling Diagram Miscellaneous Solid Waste Process Vessel Import/Export	DWG-W375LV-M00702	Supplement 9
LV	510	Process Flow Diagram LAW Liquid Effluent System	DWG-W375LV-PR01006	Supplement 9
LV	700	LAW Vitrification Building HVAC Overall Plant Diagram	DWG-W375LV-HV00052	Supplement 9
LV	GA	LAW Vitrification Building Locally Shielded Melter Plan at EL. (-)21'-0"	DWG-W375LV-PL00042	Supplement 9
LV	GA	LAW Vitrification Building Locally Shielded Melter Plan at EL. 3'-0"	DWG-W375LV-PL00043	Supplement 9
LV	GA	LAW Vitrification Building Locally Shielded Melter Plan at EL. 22'-0"	DWG-W375LV-PL00044	Supplement 9
LV	GA	LAW Vitrification Building Locally Shielded Melter Plan at EL. 28'-0"	DWG-W375LV-PL00045	Supplement 9
LV	GA	LAW Vitrification Building Locally Shielded Melter Plan at EL. 48'-0"	DWG-W375LV-PL00046	Supplement 9
LV	GA	LAW Vitrification Building Locally Shielded Melter Plan at EL. 68'-0"	DWG-W375LV-PL00047	Supplement 9
LV	GA	LAW Vitrification Building Locally Shielded Melter Section A-A, B-B, and C-C	DWG-W375LV-PL00048	Supplement 9
LV	GA	LAW Vitrification Building Locally Shielded Melter Section D-D, E-E, and F-F	DWG-W375LV-PL00049	Supplement 9
HV	211	Process Flow Diagram HLW Vitrification Feed Preparation and Offgas	DWG-W375HV-PR00031	Supplement 9
HV	211	HLW Vitrification Melter Drawing sheet 1	RPP-M2001	Supplement 10
HV	211	HLW Vitrification Melter Drawing sheet 2	RPP-M2001	Supplement 10
HV	211	HLW Vitrification Melter Drawing sheet 1	RPP-M2002	Supplement 10
HV	211	HLW Vitrification Melter Drawing sheet 2	RPP-M2002	Supplement 10
HV	211	HLW Vitrification Melter Drawing sheet 3	RPP-M2002	Supplement 10
HV	231	Process Flow Diagram HLW Vitrification Offgas Treatment	DWG-W375HV-PR00032	Supplement 9
HV	241	HLW Vitrification System 241 Mech Handling Diagram Level 1 Melter Cave 1	DWG-W375HV-M00180	Supplement 9
HV	270	HLW Vitrification System 270 Mech Handling Diagram Level 1 Consumables Post-In & Export	DWG-W375HV-M00430	Supplement 9
HV	305	HLW Vitrification System 305 Mechanical Handling Diagram Level 1 Clean Canister Import	DWG-W375HVM00593	Supplement 9
HV	310	HLW Vitrification System 315 Mechanical Handling Diagram Level 1 Pour Tunnel 1	DWG-W375HV-M00594	Supplement 9
HV	315	HLW Vitrification System 310 Mech Handling Diagram Level 1 Product Canister Handling and Buffer Store	DWG-W375HV-M00595	Supplement 9
HV	320	HLW Vitrification System 320/350 Mechanical Handling Diagram Level 1 Canister Weld and Rework	DWG-W375HV-M00596	Supplement 9

Table A-1a. Design Media Tracking (sorted by system/facility)

Facility	System Number	Title	Document Number	Location
HV	330	HLW Vitrification System 330 Mechanical Handling Diagram Level 1 Sheet 1 of 2	DWG-W375HV-M00525	Supplement 9
HV	330	HLW Vitrification System 330 Mechanical Handling Diagram Level 1 Sheet 2 of 2	DWG-W375HV-M00526	Supplement 9
HV	330	Process Flow Diagram Plant Waste Management HLW Canister Decon	DWG-W375HV-PR00035	Supplement 9
HV	340	HLW Vitrification System 340 Mechanical Handling Diagram Level 1	DWG-W375HV-M00532	Supplement 9
HV	420	HLW Vitrification System 420 Design Proposal Drawing HLW Melter Overpack Plant item #H34131 Sheet 1 of 2	DWG-W375HV-M00105	Supplement 9
HV	420	HLW System 420 MHD Level 1 Melter 1 Airlock Sheet 1 of 1	DWG-W375HV-M00172	Supplement 9
HV	420	HLW Vitrification System 420 Design Proposal Drawing HLW Melter Overpack DET. & DECT. Plant item #H34131 Sheet 2 of 2	DWG-W375HV-M00178	Supplement 9
HV	440	HLW Vitrification System 440 Mech Handling Diagram Level 1 Solid Waste Container Packaging Sheet 1 of 2	DWG-W375HV-M00325	Supplement 9
HV	450	HLW Vitrification System 450 Mech handling Diagram Level 1 Solid Waste Container Swabbing and Monitoring, Storage and Export Sh. 1 of 2	DWG-W375HV-M00206	Supplement 9
HV	450	HLW Vitrification System 450 Mech handling Diagram Level 1 Solid Waste Container Swabbing and Monitoring, Storage and Export Sh. 2 of 2	DWG-W375HV-M00207	Supplement 9
HV	510	Process Flow Diagram HLW Vitrification Liquid Waste System 510	DWG-W375HV-PR00036	Supplement 9
HV	520	Process Flow Diagram HLW C1/C2 Drains Collection System 520	DWG-W375HV-PR00038	Supplement 9
HV	700	HLW Vitrification Building HVAC Overall Plant Diagram	DWG-W375HV-HV00001	Supplement 9
HV	060	HLW Vitrification System 060 Detail Canister Weldment	DWG-W375HV-M00814	Supplement 9
HV	060	HLW Vitrification System 060 Detail Canister	DWG-W375HV-M00815	Supplement 9
HV	060	HLW Vitrification System 060 Detail Canister Lid	DWG-W375HV-M00816	Supplement 9
HV	060	HLW Vitrification System 060 Detail Canister Lid Welding	DWG-W375HV-M00818	Supplement 9
HV	110, 131	Process Flow Diagram HLW Vitrification Feed Preparation and Offgas	DWG-W375HV-PR00031	Supplement 9
HV	GA	HLW Vitrification Building General Arrangement Plan AT EL. -21'-0"	DWG-W375HV-PL00015	Supplement 9
HV	GA	HLW Vitrification Building General Arrangement Plan AT EL. 0'-0"	DWG-W375HV-PL00016	Supplement 9
HV	GA	HLW Vitrification Building General Arrangement Plan AT EL. 11'-0"	DWG-W375HV-PL00017	Supplement 9
HV	GA	HLW Vitrification Building General Arrangement Plan AT EL. 30'-0"	DWG-W375HV-PL00018	Supplement 9
HV	GA	HLW Vitrification Building General Arrangement Plan AT EL. 49'-0"	DWG-W375HV-PL00019	Supplement 9
HV	GA	HLW Vitrification Building General Arrangement Plan AT EL. 62'-0"	DWG-W375HV-PL00020	Supplement 9
HV	GA	HLW Vitrification Building General Arrangement Plan AT EL. 76'-0"	DWG-W375HV-PL00021	Supplement 9
HV	GA	HLW Vitrification Building General Arrangement Sections A-A, B-B, C-C	DWG-W375HV-PL00022	Supplement 9
HV	GA	HLW Vitrification Building General Arrangement Sections D-D, E-E, F-F	DWG-W375HV-PL00023	Supplement 9

Table A-1a. Design Media Tracking
(sorted by system/facility)

Facility	System Number	Title	Document Number	Location
HV	GA	HLW Vitrification Building General Arrangement Section G-G and Section H-H	DWG-W375HV-PL00024	Supplement 9
HV	GA	HLW Vitrification Building General Arrangement Section J-J and Section K-K	DWG-W375HV-PL00025	Supplement 9
BOF	520	Process Flow Diagram Non-Radioactive Effluent	DWG-W375-PR00059	Supplement 9
BOF	600	Process Flow Diagram Reagent Bulk Storage and Dilution	DWG-W375-PR00054	Supplement 9
BOF	645	Process Flow Diagram Demineralized Water	DWG-W375-PR00048	Supplement 9
BOF	905	Process Flow Diagram Instrument Air	DWG-W375-PR00043	Supplement 9
BOF	910	Process Flow Diagram Process Air	DWG-W375-PR00044	Supplement 9
BOF	945	Process Flow Diagram Cooling Water	DWG-W375-PR00045	Supplement 9
BOF	950	Process Flow Diagram Chilled Water	DWG-W375-PR00050	Supplement 9
BOF	955	Process Flow Diagram Process Water	DWG-W375-PR00049	Supplement 9
BOF	970	Process Flow Diagram High Pressure Steam	DWG-W375-PR00047	Supplement 9
BOF	975	Process Flow Diagram L.P. Steam and Condensate	DWG-W375-PR00046	Supplement 9
BOF	GA	RPP-WTP DWPA Site Plot Plan	DWG-W375BF-C00001	Supplement 9
BOF	GA	BOF Failed Melter Storage Plan @ El. 0'-0" General Arrangement	DWG-W375BF-PL00020	Supplement 9
BOF	GA	BOF Melter Staging Area Plan @ El. 0'-0" General Arrangement	DWG-W375BF-PL00021	Supplement 9
BOF	GA	BOF Central Waste Storage Plan @ El. 0'-0" General Arrangement	DWG-W375BF-PL00022	Supplement 9

Table A-1b. Design Media Tracking
(sorted by drawing number)

Document Number	Facility	System Number	Title	Location
DWG-W375BF-C00001	BOF	GA	RPP-WTP DWPA Site Plot Plan	Supplement 9
DWG-W375BF-PL00020	BOF	GA	BOF Failed Melter Storage Plan @ El. 0'-0" General Arrangement	Supplement 9
DWG-W375BF-PL00021	BOF	GA	BOF Melter Staging Area Plan @ El. 0'-0" General Arrangement	Supplement 9
DWG-W375BF-PL00022	BOF	GA	BOF Central Waste Storage Plan @ El. 0'-0" General Arrangement	Supplement 9
DWG-W375HV-HV00001	HV	700 HVAC	HLW Vitrification Building HVAC Overall Plant Diagram	Supplement 9
DWG-W375HV-M00105	HV	420	HLW Vitrification System 420 Design Proposal Drawing HLW Melter Overpack Plant item #H34131 Sheet 1 of 2	Supplement 9
DWG-W375HV-M00172	HV	420	HLW System 420 MHD Level 1 Melter 1 Airlock Sheet 1 of 1	Supplement 9
DWG-W375HV-M00178	HV	420	HLW Vitrification System 420 Design Proposal Drawing HLW Melter Overpack DET. & DECT. Plant item #H34131 Sheet 2 of 2	Supplement 9
DWG-W375HV-M00180	HV	241	HLW Vitrification System 241 Mech Handling Diagram Level 1 Melter Cave 1	Supplement 9
DWG-W375HV-M00206	HV	450	HLW Vitrification System 450 Mech handling Diagram Level 1 Solid Waste Container Swabbing and Monitoring, Storage and Export Sh. 1 of 2	Supplement 9
DWG-W375HV-M00207	HV	450	HLW Vitrification System 450 Mech handling Diagram Level 1 Solid Waste Container Swabbing and Monitoring, Storage and Export Sh. 2 of 2	Supplement 9
DWG-W375HV-M00325	HV	440	HLW Vitrification System 440 Mech Handling Diagram Level 1 Solid Waste Container Packaging Sheet 1 of 2	Supplement 9
DWG-W375HV-M00430	HV	270	HLW Vitrification System 270 Mech Handling Diagram Level 1 Consumables Post-In & Export	Supplement 9
DWG-W375HV-M00525	HV	330	HLW Vitrification System 330 Mechanical Handling Diagram Level 1 Sheet 1 of 2	Supplement 9
DWG-W375HV-M00526	HV	330	HLW Vitrification System 330 Mechanical Handling Diagram Level 1 Sheet 2 of 2	Supplement 9
DWG-W375HV-M00532	HV	340	HLW Vitrification System 340 Mechanical Handling Diagram Level 1	Supplement 9
DWG-W375HVM00593	HV	305	HLW Vitrification System 305 Mechanical Handling Diagram Level 1 Clean Canister Import	Supplement 9
DWG-W375HV-M00594	HV	310	HLW Vitrification System 315 Mechanical Handling Diagram Level 1 Pour Tunnel 1	Supplement 9
DWG-W375HV-M00595	HV	315	HLW Vitrification System 310 Mech Handling Diagram Level 1 Product Canister Handling and Buffer Store	Supplement 9
DWG-W375HV-M00596	HV	320	HLW Vitrification System 320/350 Mechanical Handling Diagram Level 1 Canister Weld and Rework	Supplement 9
DWG-W375HV-M00814	HV	060	HLW Vitrification System 060 Detail Canister Weldment	Supplement 9
DWG-W375HV-M00815	HV	060	HLW Vitrification System 060 Detail Canister	Supplement 9
DWG-W375HV-M00816	HV	060	HLW Vitrification System 060 Detail Canister Lid	Supplement 9

Table A-1b. Design Media Tracking (sorted by drawing number)

Document Number	Facility	System Number	Title	Location
DWG-W375HV-M00818	HV	060	HLW Vitrification System 060 Detail Canister Lid Welding	Supplement 9
DWG-W375HV-PL00015	HV	GA	HLW Vitrification Building General Arrangement Plan AT EL. -21'-0"	Supplement 9
DWG-W375HV-PL00016	HV	GA	HLW Vitrification Building General Arrangement Plan AT EL. 0'-0"	Supplement 9
DWG-W375HV-PL00017	HV	GA	HLW Vitrification Building General Arrangement Plan AT EL. 11'-0"	Supplement 9
DWG-W375HV-PL00018	HV	GA	HLW Vitrification Building General Arrangement Plan AT EL. 30'-0"	Supplement 9
DWG-W375HV-PL00019	HV	GA	HLW Vitrification Building General Arrangement Plan AT EL. 49'-0"	Supplement 9
DWG-W375HV-PL00020	HV	GA	HLW Vitrification Building General Arrangement Plan AT EL. 62'-0"	Supplement 9
DWG-W375HV-PL00021	HV	GA	HLW Vitrification Building General Arrangement Plan AT EL. 76'-0"	Supplement 9
DWG-W375HV-PL00022	HV	GA	HLW Vitrification Building General Arrangement Sections A-A, B-B, C-C	Supplement 9
DWG-W375HV-PL00023	HV	GA	HLW Vitrification Building General Arrangement Sections D-D, E-E, F-F	Supplement 9
DWG-W375HV-PL00024	HV	GA	HLW Vitrification Building General Arrangement Section G-G and Section H-H	Supplement 9
DWG-W375HV-PL00025	HV	GA	HLW Vitrification Building General Arrangement Section J-J and Section K-K	Supplement 9
DWG-W375HV-PR00031	HV	110, 131	Process Flow Diagram HLW Vitrification Feed Preparation and Offgas	Supplement 9
DWG-W375HV-PR00031	HV	211	Process Flow Diagram HLW Vitrification Feed Preparation and Offgas	Supplement 9
DWG-W375HV-PR00032	HV	231	Process Flow Diagram HLW Vitrification Offgas Treatment	Supplement 9
DWG-W375HV-PR00035	HV	330	Process Flow Diagram Plant Waste Management HLW Canister Decon	Supplement 9
DWG-W375HV-PR00036	HV	510	Process Flow Diagram HLW Vitrification Liquid Waste System 510	Supplement 9
DWG-W375HV-PR00038	HV	520	Process Flow Diagram HLW C1/C2 Drains Collection System 520	Supplement 9
DWG-W375LP-HV00001	LP	700	V&ID Overall Pretreatment Building	Supplement 9
DWG-W375LP-M00218	LP	410	System 410 Spent Resin Waste Handling System Level 1 MHD - Sheet 1	Supplement 9
DWG-W375LP-M00219	LP	410	System 410 Spent Resin Waste Handling System Level 1 MHD - Sheet 2	Supplement 9
DWG-W375LP-M00220	LP	410	System 410 Spent Resin Waste Handling System Level 1 MHD - Sheet 3	Supplement 9
DWG-W375LP-PL00001	LP	GA	LAW Pretreatment Plant General Arrangement Plan at (-)30' - 0"	Supplement 9
DWG-W375LP-PL00002	LP	GA	LAW Pretreatment Plant General Arrangement Plan at 0' - 0"	Supplement 9
DWG-W375LP-PL00003	LP	GA	LAW Pretreatment Plant General Arrangement Plan at 25' - 0"	Supplement 9
DWG-W375LP-PL00004	LP	GA	LAW Pretreatment Plant General Arrangement Plan at 55' - 0"	Supplement 9
DWG-W375LP-PL00005	LP	GA	LAW Pretreatment Plant General Arrangement Plan at 75' - 0"	Supplement 9
DWG-W375LP-PL00006	LP	GA	LAW Pretreatment Plant General Arrangement Plan at 96' - 0"	Supplement 9
DWG-W375LP-PL00007	LP	GA	LAW Pretreatment Plant General Arrangement Section A Looking East	Supplement 9
DWG-W375LP-PL00008	LP	GA	LAW Pretreatment Plant General Arrangement Section B Looking East	Supplement 9
DWG-W375LP-PL00009	LP	GA	LAW Pretreatment Plant General Arrangement Section C Looking East	Supplement 9
DWG-W375LP-PL00010	LP	GA	LAW Pretreatment Plant General Arrangement Section D Looking East	Supplement 9

Table A-1b. Design Media Tracking (sorted by drawing number)

Document Number	Facility	System Number	Title	Location
DWG-W375LP-PL00011	LP	GA	LAW Pretreatment Plant General Arrangement Section E Looking East	Supplement 9
DWG-W375LP-PR00002	LP	510	Process Flow Diagram LAW Pretreatment Effluent Collection System LP-510/550	Supplement 9
DWG-W375LP-PR00002	LP	550	Process Flow Diagram Plant Wash and Drain Collection System 550	Supplement 9
DWG-W375LP-PR00005	LP	540	Process Flow Diagram LAW Pretreatment Vessel Vents System LP-540/770	Supplement 9
DWG-W375LP-PR00006	LP	330	Process Flow Diagram Technetium Removal Using Ion Exchange System LP-330	Supplement 9
DWG-W375LP-PR00008	LP	130	Process Flow Diagram LAW Melter Feed Evaporation System LP-130	Supplement 9
DWG-W375LP-PR00009	LP	140	Process Flow Diagram LAW Melter Feed Lag Storage System LP-140	Supplement 9
DWG-W375LP-PR00010	LP	340	Process Flow Diagram Technetium Eluant Recovery System LP-340	Supplement 9
DWG-W375LP-PR00012	LP	370	Process Flow Diagram Spent Resin Collection & Dewatering System LP-370	Supplement 9
DWG-W375LP-PR00021	LP	365	Process Flow Diagram Technetium Fresh Resin Addition System LP-365	Supplement 9
DWG-W375LV-HV00052	LV	700	LAW Vitrification Building HVAC Overall Plant Diagram	Supplement 9
DWG-W375LV-M00111	LV	311	LAW Vitrification System 311 MHD LVL 1 Product Container Receipt and Transfer Line 1	Supplement 9
DWG-W375LV-M00113	LV	313	LAW Vitrification System 313 Mechanical Handling Diagram Level 1 Product Container Pour Cave Transfer	Supplement 9
DWG-W375LV-M00114	LV	314	LAW Vitrification System 314 Mechanical Handling Diagram Level 1 Product Container Buffer Store	Supplement 9
DWG-W375LV-M00241	LV	060	LAW Vitrification System 060 Design Proposal Drawing Product Container Weldment Details	Supplement 9
DWG-W375LV-M00242	LV	060	LAW Vitrification System 060 Design Proposal Drawing Product Container Top Head & Lid Details	Supplement 9
DWG-W375LV-M00243	LV	060	LAW Vitrification System 060 Design Proposal Drawing Product Container Bottom Head & Body Details	Supplement 9
DWG-W375LV-M00387	LV	421	LAW Vitrification System 411 Mechanical Handling Diagram LSM Transport	Supplement 9
DWG-W375LV-M00470	LV	211	LAW Vitrification System 211, 212, 213 Design Proposal Drawing Locally Shielded Melter Assembly	Supplement 10
DWG-W375LV-M00490	LV	221	LAW Vitrification System 221 Mech Handling Diagram Glass Pour System	Supplement 9
DWG-W375LV-M00673	LV	244	LAW Vitrification System 244 Mechanical Handling Diagram Melter Cave Support	Supplement 9
DWG-W375LV-M00702	LV	450	LAW Vitrification System 450 Mechanical Handling Diagram Miscellaneous Solid Waste Process Vessel Import/Export	Supplement 9
DWG-W375LV-M00736	LV	331	LAW Vitrification System 331 Mech. Handling Diagram 1 Decontamination, Swabbing, & Monitoring	Supplement 9

Table A-1b. Design Media Tracking
(sorted by drawing number)

Document Number	Facility	System Number	Title	Location
DWG-W375LV-M00737	LV	331	LAW Vitrification System 331 Mech. Handling Diagram 1 Line Transfer Station	Supplement 9
DWG-W375LV-M00738	LV	331	LAW Vitrification System 331 Mech. Handling Diagram 1 Fixative Station	Supplement 9
DWG-W375LV-M00791	LV	340	LAW Vitrification System 340 Mech Handling Diagram Level 1 Storage & Swabbing	Supplement 9
DWG-W375LV-M00860	LV	431	LAW Vitrification System 431 MHD Level I Consumable Import/Export	Supplement 9
DWG-W375LV-M00951	LV	321	LAW Vitrification System 321 Mech Handling Diagram Level 1 Inert Fill and Container Lid Weld Area	Supplement 9
DWG-W375LV-PL00042	LV	GA	LAW Vitrification Building Locally Shielded Melter Plan at EL. (-)21'-0"	Supplement 9
DWG-W375LV-PL00043	LV	GA	LAW Vitrification Building Locally Shielded Melter Plan at EL. 3'-0"	Supplement 9
DWG-W375LV-PL00044	LV	GA	LAW Vitrification Building Locally Shielded Melter Plan at EL. 22'-0"	Supplement 9
DWG-W375LV-PL00045	LV	GA	LAW Vitrification Building Locally Shielded Melter Plan at EL. 28'-0"	Supplement 9
DWG-W375LV-PL00046	LV	GA	LAW Vitrification Building Locally Shielded Melter Plan at EL. 48'-0"	Supplement 9
DWG-W375LV-PL00047	LV	GA	LAW Vitrification Building Locally Shielded Melter Plan at EL. 68'-0"	Supplement 9
DWG-W375LV-PL00048	LV	GA	LAW Vitrification Building Locally Shielded Melter Section A-A, B-B, and C-C	Supplement 9
DWG-W375LV-PL00049	LV	GA	LAW Vitrification Building Locally Shielded Melter Section D-D, E-E, and F-F	Supplement 9
DWG-W375LV-PR01001	LV	110, 131	Process Flow Diagram LAW Vitrification Feed Preparation	Supplement 9
DWG-W375LV-PR01002	LV	211	Process Flow Diagram LAW Vitrification, Melter 1 and Offgas Quenching	Supplement 9
DWG-W375LV-PR01003	LV	231/234	LAW Melter 2 Offgas Quenching	Supplement 9
DWG-W375LV-PR01004	LV	231/234	LAW Melter 3 Offgas Quenching	Supplement 9
DWG-W375LV-PR01005	LV	231/234	Process Flow Diagram LAW Vit Primary and Secondary Offgas Treatment	Supplement 9
DWG-W375LV-PR01005	LV	231/234	Primary and Secondary Offgas Treatment	Supplement 9
DWG-W375LV-PR01006	LV	510	Process Flow Diagram LAW Liquid Effluent System	Supplement 9
DWG-W375LV-PR01009	LV	331	Process Flow Diagram LAW Vitrification Container Decontamination	Supplement 9
DWG-W375-PR00043	BOF	905	Process Flow Diagram Instrument Air	Supplement 9
DWG-W375-PR00044	BOF	910	Process Flow Diagram Process Air	Supplement 9
DWG-W375-PR00045	BOF	945	Process Flow Diagram Cooling Water	Supplement 9
DWG-W375-PR00046	BOF	975	Process Flow Diagram L.P. Steam and Condensate	Supplement 9
DWG-W375-PR00047	BOF	970	Process Flow Diagram High Pressure Steam	Supplement 9
DWG-W375-PR00048	BOF	645	Process Flow Diagram Demineralized Water	Supplement 9
DWG-W375-PR00049	BOF	955	Process Flow Diagram Process Water	Supplement 9
DWG-W375-PR00050	BOF	950	Process Flow Diagram Chilled Water	Supplement 9
DWG-W375-PR00054	BOF	600	Process Flow Diagram Reagent Bulk Storage and Dilution	Supplement 9

Table A-1b. Design Media Tracking
(sorted by drawing number)

Document Number	Facility	System Number	Title	Location
DWG-W375-PR00059	BOF	520	Process Flow Diagram Non-Radioactive Effluent	Supplement 9
DWG-W375PT-HV00001	PT	700	V&ID Overall Pretreatment Building	Supplement 9
DWG-W375PT-M00331	PT	410	Pretreatment System 410 Level 1 Mechanical Handling Diagram Incell Handling	Supplement 9
DWG-W375PT-M00332	PT	420	Pretreatment System 420 Level 1 Mechanical Handling Diagram Incell Mechanical Equipment	Supplement 9
DWG-W375PT-M00333	PT	430	Pretreatment System 430 Level 1 Mechanical Handling Diagram Incell Decontamination	Supplement 9
DWG-W375PT-M00334	PT	440	Pretreatment System 440 Level 1 Mechanical Handling DiagramOutcell Handling	Supplement 9
DWG-W375PT-M00335	PT	450	Pretreatment System 450 Level 1 Mechanical Handling Diagram Outcell Mech. Equipment	Supplement 9
DWG-W375PT-M00402	PT	430	Pretreatment System 430 Maintenance Facility Decontamination Vessels	Supplement 9
DWG-W375PT-PL00009	PT	GA	Pretreatment Building General Arrangement Plan AT 0'-0"	Supplement 9
DWG-W375PT-PL00010	PT	GA	Pretreatment Building General Arrangement Plan AT 20'-0"	Supplement 9
DWG-W375PT-PL00011	PT	GA	Pretreatment Building General Arrangement Plan AT 56'-0"	Supplement 9
DWG-W375PT-PL00012	PT	GA	Pretreatment Building General Arrangement Plan AT 77'-0"	Supplement 9
DWG-W375PT-PL00013	PT	GA	Pretreatment Building General Arrangement Plan AT 98'-0"	Supplement 9
DWG-W375PT-PL00014	PT	GA	Pretreatment Building General Arrangement Plan AT 119'-0"	Supplement 9
DWG-W375PT-PL00015	PT	GA	Pretreatment Building General Arrangement Sections A and B	Supplement 9
DWG-W375PT-PL00016	PT	GA	Pretreatment Building General Arrangement Sections C and D	Supplement 9
DWG-W375PT-PL00018	PT	GA	Pretreatment Building General Arrangement Sections E and F	Supplement 9
DWG-W375PT-PL00019	PT	GA	Pretreatment Building General Arrangement Sections G and H	Supplement 9
DWG-W375PT-PL00020	PT	GA	Pretreatment Building General Arrangement Sections J and K	Supplement 9
DWG-W375PT-PL00022	PT	GA	Pretreatment Building General Arrangement Plan AT (-)50'-0"	Supplement 9
DWG-W375PT-PR00001	General	General	Process Flow Diagram Symbols and Legends	Supplement 9
DWG-W375PT-PR00003	PT	120	Process Flow Diagram LAW Feed Evaporation System PT-120	Supplement 9
DWG-W375PT-PR00004	PT	230	Process Flow Diagram LAW Ultrafiltration System PT-230	Supplement 9
DWG-W375PT-PR00005	PT	310	Process Flow Diagram Cesium Removal Using Ion Exchange System PT-310	Supplement 9
DWG-W375PT-PR00009	PT	320	Process Flow Diagram Cesium Nitric Acid Recovery System PT-320	Supplement 9
DWG-W375PT-PR00011	PT	360	Process Flow Diagram Cesium Fresh Resin AdditionSystem PT-360	Supplement 9
DWG-W375PT-PR00014	PT	540	Process Flow Diagram Pretreatment Vessel Vents System PT-540/770	Supplement 9
DWG-W375PT-PR00015	PT	550	Process Flow Diagram Pretreatment Effluent Collection System PT-550	Supplement 9
DWG-W375PT-PR00016	PT	210	Process Flow Diagram HLW Feed Receipt and Pre-Treatment System 210/220	Supplement 9

Table A-1b. Design Media Tracking
(sorted by drawing number)

Document Number	Facility	System Number	Title	Location
DWG-W375PT-PR00016	PT	220	Process Flow Diagram HLW Feed Receipt and Pre-Treatment System 210/220	Supplement 9
DWG-W375PT-PR00017	PT	110	Process Flow Diagram LAW Feed Receipt System PT-110	Supplement 9
DWG-W375SH-J00001	General	General	Mechanical Handling Symbols and Legends Sheet 1 of 2	Supplement 9
DWG-W375SH-J00008	General	General	Mechanical Handling Symbols and Legends Sheet 2 of 2	Supplement 9
DWG-W375-M00001	General	General	P&ID Symbols and Legends 1 of 5	Supplement 9
DWG-W375-M00002	General	General	P&ID Symbols and Legends 2 of 5	Supplement 9
DWG-W375-M00003	General	General	P&ID Symbols and Legends 3 of 5	Supplement 9
DWG-W375-M00004	General	General	P&ID Symbols and Legends 4 of 5	Supplement 9
DWG-W375-M00005	General	General	P&ID Symbols and Legends 5 of 5	Supplement 9
RPP-M2001	HLW-VIT	211	HLW Vitrification Melter Drawing sheet 1	Supplement 10
RPP-M2001	HLW-VIT	211	HLW Vitrification Melter Drawing sheet 2	Supplement 10
RPP-M2002	HLW-VIT	211	HLW Vitrification Melter Drawing sheet 1	Supplement 10
RPP-M2002	HLW-VIT	211	HLW Vitrification Melter Drawing sheet 2	Supplement 10
RPP-M2002	HLW-VIT	211	HLW Vitrification Melter Drawing sheet 3	Supplement 10

Appendix 4B

Appendix 4B
Tank System Design Assessment Report and Certification

Appendix 4B
Tank Integrity Assessment Report and Certification

This assessment report and certification will be completed during the design and installation of the RPP-WTP tank systems.

Appendix 4C

Appendix 4C
Tank Installation and Inspection Plan and Report

Appendix 4C
Tank Installation and Inspection Plan and Report

This assessment report and certification will be completed during the design and installation of the RPP-WTP tank systems.

Appendix 4D

Appendix 4D
Treatment Effectiveness Report for Miscellaneous Units

Appendix 4D
Treatment Effectiveness Report for Miscellaneous Units

This information will be provided when it is completed.

Appendix 4E

Appendix 4E
Subpart AA Analysis

BNFL Inc.

Memorandum

To: Lee Bostic, Manager Environmental Safety 2/18/00

From: Jeff Markillie CCN #: 011419
Ext: 4663
Fax:

Subject: **40 CFR Part 264 Subpart AA – Process Vents**

Issue Framework:	Air emission control requirements apply to specific types of waste and equipment. These requirements are described in BNFL's Codes of Practice K70C545, K70C537, and K70C542, and the Environmental Regulatory Guide K70P513.
Regulatory Requirement Constraining Issue:	**40 CFR 264, *"Air Emission Control Requirements"* – Subpart AA, *"Process Vents"***: Requires control of any waste containing over 10 PPM by weight total organic compounds for organic emissions in thin film evaporators, distillation units, and vessels receiving wastes from these units. Waste characterization data indicates that some waste envelopes contain more than 10 ppmw organic compounds.
DWPA Reference:	Chapter 4, Section 4.3.2; Chapter 6, Section 6.2.4.

Issue History:

Executive Summary: 40 CFR Part 264 identifies a list of equipment types that are regulated under Subpart AA. None of the equipment types listed are employed at the RPP-WTP. Thus, the RPP-WTP is not subject to the requirements of 40 CFR Part 264 Subpart AA. However, the RPP-WTP is performing a T-BACT analysis on the process vent serving the pretreatment evaporators pursuant to Chapter 173-460 WAC, and will meet T-BACT requirements for controlling toxic, including organic, air emissions. Air emissions from the RPP-WTP will be protective of human health and environment and regulated under a Notice of Construction approval issued by the Washington State Department of Ecology.

The Regulation and Assumptions: A dangerous waste treatment, storage, or disposal facility (TSD) must meet *both* of the following criteria to be regulated under Subpart AA:

1. Manages waste that contains, **on a time-weighted, annual average basis,** at least **10 parts per million by weight (ppmw) organic concentration**

AND

2. Has process vents associated with **distillation, fractionation, thin-film evaporation, solvent extraction, or air or steam stripping operations**

The RPP-WTP meets the first criterion (receives waste containing at least 10 ppmw organics), but not the second (does not use one of the regulated operations). Because evaporation is not distillation, the RPP-WTP is not regulated by Subpart AA. Following are the assumptions and information used to make this determination:

1. The RPP-WTP is subject to permitting under RCRA and WAC 173-303;
2. The RPP-WTP does not qualify for any hazardous waste permitting exemptions under the provisions of 40 CFR 262.34(a), such as hazardous waste recycling units managing waste only in "90-day" tanks or containers;
3. Waste received from Hanford Tank Farms contains an annual average total organics concentration of 10 ppmw or greater;
4. The evaporator vent is the only vent stream where Subpart AA may apply;
5. The entire Hanford Site Facility restricts total organic emissions from all Site facilities' affected process vents below 3 lb/hr and 3.1 tons/year.

Detailed Analysis: The question of applicability centers on whether the RPP-WTP uses one of the regulated process operations specified in the regulation. Distillation, one of the regulated processes, appears most similar to the RPP-WTP's evaporation operation.

Subpart AA defines distillation as: "Distillation operation means an operation, either batch or continuous, separating one or more feed stream(s) into two or more exit streams, each exit stream having component concentrations different from those in the feed stream(s). The separation is achieved by the redistribution of the components between the liquid and vapor phase as they approach equilibrium within the distillation unit." (40 CFR 264.1031)

The EPA's background information document (BID)[1] gives the following technical guidance to help understand what is regulated:

> Distillation is the most commonly used separation and purification procedure in refineries, solvent recovery systems, large organic chemical manufacturing plants, and TSDF's. The fundamental operating principles for a distillation column are the same regardless of the application. This section briefly discusses some of the principles involved in distillation to provide a better understanding of the operating characteristics of distillation units.
>
> Distillation is an operation separating one or more feed stream(s)* into two or more product streams, each product stream having component concentrations different from those in the feed stream(s). The separation is achieved by the redistribution of the components between the liquid- and vapor-phase as they approach equilibrium within the distillation unit. The more volatile components

[1] *Hazardous Waste TSDF – Technical Guidance Document for RCRA Air Emission Standards for Process Vents and Equipment Leaks*, EPA-450/3-89-021, U.S. Environmental Protection Agency July 1990.

concentrate in the vapor phase, while the less volatile components(s) *(sic)* concentrate in the liquid phase. Both the vapor and liquid phase originate predominantly by vaporization and condensation of the feed stream.

* For batch distillation, the word "charge" should be used in place of "feed stream."

The key differences between distillation and the RPP-WTP's evaporative processes are summarized in the following table:

Distillation	Evaporation
Separates and purifies one or more specific compounds, in this case organics, from a given a feed stream	The evaporation process reduces the volume of waste by indiscriminately boiling off excess water (that may contain organics), condenses it, and disposes of it – it does not separate, purify, or create a "product"
Involves vapor and liquid phases separating in a column as they approach equilibrium	The RPP-WTP evaporator separates water vapor from the waste feed stream, but the liquid and vapor phases *do not* approach equilibrium, nor does the process use a "column"
Both the vapor and liquid phase originate predominantly by vaporization and condensation of the feed stream;	The evaporator's liquid phase comes from the waste feed, it does not come from condensation of the feed stream
Commonly (although not always) introduces "reflux" so that the condensate created during distillation falls back down the distillation column, also called rectification	Simply concentrates the feed by vaporizing excess water - the condensate is waste and does not return to the evaporator

The EPA clearly associated distillation with the intentional *capture* of organic constituents, so that the organics are/or become useable product(s). The RPP-WTP process is distinguishable by its unintentional vaporization of organics that are *not* captured or separated from the water vapor. The RPP-WTP process is intended and designed to simply reduce or concentrate the waste feed stream by boiling off excess water. The fact that organics boil off with the water is coincidental. The RPP-WTP evaporator does not capture or separate any organics from the removed water. Furthermore, any uncondensed overhead vapors generated by evaporation at the RPP-WTP are treated in the plant's offgas treatment system that will be compliant with Washington State Clean Air Regulations (WAC 173-460).

The EPA is clear that Subpart AA is intended to regulate facilities' process vents if those facilities engage in very specific "separation" processes. All the processes listed (distillation, Fractionation, thin-filmed evaporation, solvent extraction, or air or steam stripping operations) are "separation" technicques. The fact that EPA lists "thin-filmed evaporation", but not "evaporation" is significant. "Evaporation" is conspicuous by its absence.

Coulson and Richardson's *Chemical Engineering*[2] supplements this site-specific technical analysis. The authors very clearly consider distillation and evaporation two separate and distinct operations.

> In Chapter 18 the authors state, "An important requirement of a distillation unit is the provision of intimate contact between the vapour (*sic*) and liquid streams so that equilibrium is approached" (page 602). In the same volume, chapter 21 (page 777), the authors define evaporation as, "...one of the main methods used in the chemical industry for the concentration of aqueous solutions. The usual meaning of the term is the removal of water from a solution by boiling the liquor in a suitable vessel, the evaporator, and withdrawing the vapour."

It is clear that the RPP-WTP's evaporator does not perform distillation.

Recommended Path Forward:

Based on an evaluation of applicable regulations to the proposed process system, BNFL Inc. believes that Subpart AA does not apply to the RPP-WTP facility, and consequently will not be included in the DWPA. The RPP-WTP facility is not planning to use the equipment identified in 40 CFR Part 264.1030. However, organic emissions from the evaporators and the vessel ventilation system in pretreatment will be controlled by best available control technology for toxic air pollutants (T-BACT) as governed by Washington State Air Quality Regulations (WAC 173-460). The T-BACT controls and the corresponding emissions limits will be outlined in the Washington State Department of Ecology's air quality permit for toxic air pollutants. The RPP-WTP Toxic Air Emissions Notice of Construction (PL-W375-EN000) and the RPP-WTP Toxics Best Available Control Technology Demonstration (PL-W375-EN0010) address the approach to controlling toxic air emissions, and the specific offgas control technologies that are being proposed with T-BACT.

JMarkillie

Jeff Markillie, REM
Lead Environmental Engineer
Environmental Safety

Distribution

PDC			
L. Bostic	ETC1 – P123	J. Markillie	ETC1 – P113
J. Brown	ETC1 – P111	G. Normandin	ETC1 – P110
G. Carter	ETC1 – R112	J. Su-Coker	ETC1 – P116

[2] *Chemical Engineering*, Vol. 2, J.M. Coulson and J.F. Richardson, 1955.

Appendix 4F

Appendix 4F
Detailed Engineering Descriptions

PT System 110: LAW Feed Receipt
PT System 120: LAW Feed Evaporation
PT System 210: HLW Feed Receipt
PT System 220: HLW Pretreatment
PT System 230: LAW Ultrafiltration
PT System 310: Cesium Removal Using Ion Exchange
PT System 320: Cesium Nitric Acid Recovery
PT System 540: Pretreatment Plant Vessel Vent
PT System 550: Pretreatment Plant Wash and Effluent Collection

LP System 130: LAW Melter Feed Evaporation
LP System 140: LAW Melter Feed Lag Storage
LP System 330: Technetium Removal Using Ion Exchange
LP System 340: Technetium Eluant Recovery
LP System 370: Spent Resin Collection and Dewatering
LP System 510, 550: LAW Pretreatment Plant Effluent Collection
LP System 540: LAW Pretreatment Plant Vessel Vent

LV Systems 110, 131, 132, and 133: LAW Melter Feed
LV Systems 221-226: LAW Melter Glass Pour
LV Systems 231, 232, 233, and 234: LAW Melter Offgas Treatment
LV System 311/312: ILAW Container Receipt And Transfer Lines 1 and 2
LV System 313: ILAW Container Pour Cave Transfer
LV System 314: ILAW Container Buffer Storage
LV System 321/322: ILAW Container Inert Fill and Lid Weld
LV System 331/332: ILAW Container Decontamination, Swabbing, and Monitoring
LV System 340: IHLW Container Storage and Export
LV System 510: LAW Vitrification Plant Liquid Effluent

HV Systems 110 and 131: HLW Melter Feed
HV System 231: HLW Melter Offgas Treatment
HV System 305: Clean IHLW Container Import
HV System 310: IHLW Container Handling and Buffer Store
HV System 315: Pour Tunnel
HV System 320: IHLW Container Weld, Glass Sampling, and Rework
HV System 330: IHLW Container Decontamination, Swabbing, and Swab Monitoring
HV System 340: IHLW Container Storage and Export
HV System 510: HLW Vitrification Plant Liquid Effluent

PT System 110: LAW Feed Receipt

1. Introduction and Scope

The Low Activity Waste (LAW) Feed Receipt system (System PT-110) utilizes six vessels. These six LAW Feed Receipt Vessels (termed as Receipt Vessels in the subsequent text) will be located in a vault adjacent to the pretreatment (PT) plant.

2. Applicable Document

DWG-W375PT-PR00017, Process Flow Diagram (PFD) – *LAW Feed Receipt System PT-110.*

3. Description of System Components

The system will consist of a total of six LAW receipt vessels. Four vessels are primarily used for feed receipt from the Hanford Double Shell Tank (DST) system unit. One vessel for contingency space to accommodate vessel overflows and/or leaks, and the last vessel to receive and lag store LAW feed arising from HLW pretreatment operations.

The design of the system is such that all six receipt vessels have identical functionality that includes the ability to:

- Receive, prepare, sample, and store LAW feed from DST, System LP-140 and from System PT-220.
- Transfer LAW Feed to the LAW Feed Evaporation System (System PT-120) and LAW Melter Feed to the LAW Melter Feed Lag Storage System (LP-140).
- Transfer their contents to the immediately adjacent LAW feed receipt vessels.
- Receive transfers from the immediately adjacent LAW feed receipt vessels.

All six Receipt Vessels will be equipped to transfer LAW process solution outside the boundary of System PT-110. This could include transfers back to the DST or to the LAW Melter Feed Lag Storage System (System LP-140).

3.1. Civil/Structural Components

The civil/structural components mainly consist of:

- Multi-vessel cell vault
- Six receipt vessels
- A Line Flush Makeup Vessel

Cell – The cell is lined with stainless steel to form a secondary containment. This secondary containment will accommodate up to 100 percent of the spilled contents of the largest vessel in the cell and will have a gradient designed to channel fluids to a low spot in order to be removed from the cell. Piping runs between the top of the vessels and the top of the cell. Penetrations are made through the cell walls. Valves and piping route the feed from the source tank farm to the individual receipt vessels.

The piping area is necessary to allow adequate pipe runs to guard against the formation of aerosols in the pulsejet and RFD air inlets. The cabinet/bulge area houses the cabinets that contain the valves and piping necessary to operate the reverse flow diverters (RFDs) and pulsejets in each Receipt Vessel.

Receipt Vessels – During normal operation, the vessel will generally be filled to 80 percent of the total vessel height. Each vessel is made of stainless steel. The bottom (floor) of each vessel is sloped to facilitate draining.

3.2. Mechanical Components

The mechanical components mainly consist of:

- Pulsejet mixers
- Reverse flow diverters (RFDs)
- Air-actuated valves
- Pump

Pulsejet mixers – Pulsejet mixers will be employed to agitate the vessel contents. The mixers are designed to suspend entrained solids.

RFDs – RFDs will be used to effect the inter-vessel transfer and inter-system transfer of LAW feed.

Air-actuated valves – Air-actuated valves are used to control the distribution of feed from the source tank farms into the receipt vessels.

Pump – The pump is located in the vicinity of the two LAW Feed Receipt Vessels A and F, and the Line Flush Makeup Vessel (V11027) will be used to transfer rejected LAW feed and flush solution from the respective vessels. The pump may be used to transfer pretreated feed to the LAW Pretreatment Plant.

3.3. Ventilation Components

The ventilation components consist of:

- Vent station
- Primary ventilation
- Vault ventilation

Vent Station – A vent station will be located at the DST/RPP-WTP interface pit to prevent siphoning of the feed transfer line during feed transfer by gravity drainage.

Primary ventilation – The primary ventilation outlet will be routed to the pretreatment secondary offgas system.

3.4. Instrumentation Components

The instrumentation components consist of:

- Leak detection
- Level monitoring
- Density monitoring

- Temperature monitoring

Leak detection – The cell will be lined with stainless steel and equipped with a sump containing level instrumentation which will detect any leaks attributed to in-cell equipment.

A continuous leak detection cable will detect any leaks attributed to the primary pipe of the coaxial pipe transferring the LAW feed. This leak will be contained in the secondary pipe and routed by gravity to the Plant Wash Vessel (V11009).

Level monitoring – The level of the vessel and sump contents will be monitored.

Density monitoring – The density of the vessel contents will be monitored. Signals will be routed to the central control room (CCR) within the Pretreatment facility.

Pressure monitoring – There will be pressure measurements for the RFDs and Pulsejet mixers to bound the system and prevent oversuck and overflow.

Temperature monitoring – Resistance temperature detectors (RTDs) in thermowells will be installed in each vessel.

3.5. Miscellaneous Components

The following components are also associated with this system:

- Backup power
- Sampling system
- Sump emptying ejector
- Vault wash

Backup power – Backup power will be supplied to systems deemed critical for this system. This includes: ventilation, mixing equipment, and required instrumentation. Backup power is integrated with the Pretreatment facility.

Sampling system – An auto-sampling system using RFD transfer will be installed in each receipt vessel. Sampling is required to confirm the characteristics of the contents of each receipt vessel.

Sump emptying ejector – An ejector will be installed in the cell to transfer the liquid contents from sump/secondary containment to the effluent system within the Pretreatment facility. Ejectors will also be used to empty the contents of the receipt vessels (V11020A-F).

Vault wash – Cell and vessel wash capabilities are installed for decontamination and maintenance activities.

4. Functions

The primary function of System PT-110 is to receive, lag store and transfer LAW from the DST, LAW Pretreatment and HLW pretreatment systems.

Operating functions are defined as the functions necessary to accomplish the primary functions of the system. Several operating functions may be needed to accomplish one of the primary functions.

Operating functions may overlap two or more primary functions. The operating functions for System PT-110 are as follows:

- Receive LAW feed (waste) from the DST, System LP-140 and System PT-220
- Provide safe lag storage of process solutions
- Prepare and sample process solutions
- Monitor system
- Contain the waste
- Transfer the waste

Each of the operating functions listed above is defined in Table 1. Also given in Table 1 is a column giving the shorthand name that will be used to refer to each of the functions from this point forward in this system description.

Broken up into two parts, Figure 1 shows a simplified operational block diagram for normal operations of System PT-110. Also on Figure 1, a table shows which operating function is in use for each Operational Block. The table is broken up into columns where each column immediately below a block corresponds to that block. As can be seen from the table, in many instances one Operational Block applies to more than one operating function.

Table 2 relates the Operational Block Diagram (Figure 1) and its corresponding operating function table back to the plant item(s) shown on PFD: DWG-W375PT-PR00017. Thus, Table 2 shows how the functions relate to the plant items shown on the PFD. The column "Corresponding Plant Items" lists the major pieces of plant items that correspond to each of the operation blocks shown on Figure 1. It should be noted that the listing of a piece of plant item should be interpreted as including all of the plant item's auxiliary apparatus (instruments, reverse flow diverters, pulse-jet mixers, pumps, associated piping, etc.).

5. Normal Operations

5.1. Waste Receipt and Transfer Operation

LAW feed will be pumped across the DST/RPP-WTP interface via a pipeline into the LAW Feed Receipt Vessels (V11020A/B/C/D/E/F) located in a cell. The cell will be equipped with a dedicated sump. Two identical pipelines will be available for transfer. Each pipeline will be coaxial and equipped with a continuous leak detection cable. In the event of a leak, a signal will be sent to the DST control system to halt the waste transfer. The leaked volume will be collected and contained in the secondary pipe, which will be transferred by gravity into the Plant Wash Vessel (V15009).

Each feed receipt pipeline is routed to all the receipt vessels: V11020A-F. Two pipelines will be used to transfer the feed to the receipt vessels. Excess LAW melter feed awaiting LAW vitrification will also be sent to the LAW feed receipt vessels for lag storage. This transfer will take place when there is sufficient capacity within System PT-110 to accommodate for the transferred volume.

The inter-Vessel transfer/distribution of vessel contents and the subsequent (inter-System) transfer of the vessel contents to the downstream process will be performed by reverse flow diverters (RFDs) installed within the vessels as shown on the PFD: DWG-W375PT-PR00017. It may be noted that the inter-Vessel and inter-System transfer [i.e. the transfer of contents from the first Vessel (emptying) into the second Vessel (filling)], can occur simultaneously. All the receipt vessels will have capacity to accommodate overflow volumes from each other.

Each of the six receipt vessels will be vented to the Pretreatment Vessel Vent System (System PT-540).

5.2. Pipeline Maintenance

Each transfer of LAW from DST will be followed by a pipeline flush. This will consist of a volume of inhibited water equivalent to two times the LAW transfer pipe volume. Waste returned to DST will be followed by a line flush consisting of two pipe volumes of inhibited water. This flush water will be supplied by the Line Flush Make-up Vessel (V11027). The pump, P11044A/B will be used to transfer the rejected LAW feed and flush water.

5.3. Decontamination

All the Receipt Vessels will be fitted with internal wash rings for decontamination purposes. An ejector (W11020) will route the vessel and cell washings to the plant wash vessel (V15009, System PT-550). Cells will be fitted with a wash system for decontamination purposes.

6. Safety and Interlock Requirements

A preliminary overview of the features necessary to maintain safe operations are described below.

Vessel instrumentation, alarms, controls, and/or interlocks will be provided to indicate and/or prevent the following conditions:

- Vessel contents overflow (level indication, controls, and passive overflow routes to the contingency vessels)
- Inadvertent gas/steam flowing into the vessel or being generated causing pressurization (vessels vented to the vessel vent system, temperature indication)
- Loss of vessel system integrity (vessel and sump level indications)
- Loss of mixing function (air pressure/flow indication, low or high charge vessel pressure)
- Mixing charge vessel plugging (high charge vessel pressure)
- Transfers from DST and between vessels not permitted if level is high or may cause overflow
- Inadvertent transfer device operation or more than one transfer device operating at a time
- Transfer of contents at wrong time or to wrong location
- High temperature and/or level in the system that could compromise system integrity (instruments, alarms)
- High or low contents density indication

Table 1. Operating Functions for System PT-110

Function	Shorthand Name	Requirements
Receive LAW Feed from the DST, LAW Pretreatment and HLW Pretreatment	Receive	The system will be sized to support batch transfers from the DST, System LP-140 and System PT-220.
Provide Lag Storage of the LAW feed	Store	The system will be sized to provide adequate lag storage for the initial batch transfer and all subsequent batch transfers.
Prepare and sample Process Streams	Sample	The vessel contents will be mixed and prepared for sampling. Sampling will be used in part to determine downstream unit operation processing parameters.
Monitor System	Monitor	Instrumentation and sampling will be used to monitor the system's operation in real-time.
Contain the Waste	Contain	Process equipment will be monitored for failure/leakage. The system will contain LAW using materials of construction that are compatible with the process for the intended design life. The system will detect, collect, and remove liquids leaked from the primary containment system for the intended design life. In the event of a leak from a vessel, the contents of the vessel and the sump and/or the secondary containment will be transferred into a standby vessel.
Transfer Waste	Transfer	The system will be sized to meet plant throughput requirements. It is capable of routing the LAW feed downstream into the process and flushing pipelines used for transfer. The system design should allow simultaneous transfer (emptying and filling) of LAW feed between two or more vessels. Inter-vessel transfers will be used to transfer the contents from a leaking or overflowing vessels.

1

Table 2. Operational Functions of Plant Items of System PT-110

Operational Block	Operating Function	Response to Operating Function	Corresponding Plant Items
LAW Feed Receipt	Receive	Feed receipt (from the DST, System LP-140 and System PT-220) sized to accommodate the largest expected transfer volume.	V11020A-F
	Sample	Auto-sampling system.	
	Monitor	Level, temperature, and density instruments on all vessels.	
	Contain	Leak Detection and Hold Pots for the LAW feed transfer piping. Sump level instruments for leaks into cell.	
LAW Feed Lag Storage	Store	Feed lag storage sized to accommodate largest expected transfer volume.	V11020A-F
	Sample	Auto-sampling system.	
	Monitor	Level, temperature, and density instruments on all vessels.	
	Contain	Sump level instruments for leaks into cell.	
LAW Feed Transfer	Transfer	Transfers include: Feed between Receipt vessels, Feed to System LP-140, Feed to System PT-120, Rejected LAW feed and Entrained Solids to DST, Flushing of the feed/ transfer/ return lines.	V11020A-F V11027

Figure 1. Operational Block Diagram

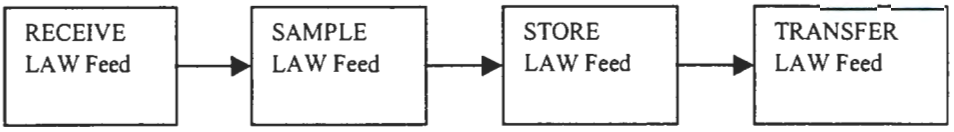

RECEIVE	SAMPLE	STORE	TRANSFER
STORE	STORE	STORE	STORE
Monitor	Monitor	Monitor	Monitor
Contain	Contain	Contain	Contain

PT System 120: LAW Feed Evaporation

1. Introduction and Scope

The Low Activity Waste (LAW) Feed Evaporator receives and evaporates LAW feed from the Hanford Double Shell Tank (DST) system unit and various recycle streams from within the pretreatment process. The streams are evaporated to minimize the throughput volume to downstream unit operations. For optimum performance of the ion exchange processes, which are downstream of the LAW Feed Evaporation System.

2. Applicable Document

PFD – *LAW Feed Evaporator*, (System No.PT-120, Drawing No. DWG-W375PT-PR00003)

3. Description

The LAW feed evaporator is a continuous, forced circulation, vacuum evaporation system. This description of the evaporation system has been divided into the following subsections: evaporator feed receipt, evaporator operation and evaporator overheads system.

3.1. Evaporator Feed Receipt

LAW Envelopes A, B and C are received and stored prior to evaporation. Envelope D wastes will be sent to the HLW process for treatment. Permeate, equivalent to one of the LAW Envelopes, generated during the initial de-watering of Envelope D, will be sent to the LAW Feed Evaporator. Additionally, Envelope D solids are to be washed or leached to remove sodium oxalate, chrome, phosphate, aluminum or other waste components. This permeate does not necessarily comply with the limits of LAW Envelopes A, B and C, but will also be routed to the LAW feed evaporator. A typical daily feed to the LAW feed evaporator consists of one of the LAW feeds (Envelope A, B, or C), and recycled streams from the LAW pretreatment process. The LAW feed may be either material transferred to RPP-WTP as LAW feed or HLW permeate or a combination of both.

Waste feed streams are transferred in batches to one of the two receipt tanks (V11001A and V11001B). The two receipt tanks are normally operated with one tank feeding the evaporator system while the other tank is filling. Each receipt tank has a pulsejet agitation system to provide mixing and to prevent settling of entrained solids.

3.2. Evaporator Operation

The evaporator feed from the receipt tanks is pumped by reverse flow diverters (RFD's) (P11001A/B and P11002A/B respectively) to the LAW feed evaporator feed breakpot (V11004). The LAW feed flows by gravity through the LAW feed evaporator lutepot (V11050) to the pipeline located between the separator vessel (V11002) and the suction side of the recirculation pump (P11004). The recirculation pump maintains a high flow rate around the evaporation system. The recirculation pump transfers LAW through the reboiler (E11001) and back into the separator vessel (V11002). Recirculating liquor is prevented from boiling in the reboiler tubes by maintaining sufficient hydrostatic head to increase the boiling point above the temperature of the liquor in the reboiler.

As the liquid travels through the reboiler, the hydrostatic head diminishes and flash evaporation occurs as the flow enters the separator vessel. The liquid continues to flash to equilibrium and the vapor and liquid streams are separated. The liquid stream circulates in this closed loop (becoming more concentrated), while the vapor stream passes to the evaporator overheads system.

After the LAW recirculating within the evaporator system is sufficiently concentrated, it is pumped out of the evaporator system using RFD's P11003A/B and P11043A/B. The concentrate off-take is situated in the discharge line of the recirculation pump at the lowest point in the evaporator recirculation loop. The concentrated LAW stream is discharged into either the LAW feed evaporator concentrate transfer breakpot (V11051B) or the LAW feed evaporator concentrate transfer pulsepot (V11051A), which prevents siphoning of concentrate product from the evaporator to the evaporator concentrate buffer tanks (V12010A/B) in the LAW Ultrafiltration System (System PT-230).

3.3. Evaporator Overheads System

The overheads first pass through the primary condenser (E11002) where the majority of the water driven off in the evaporator is condensed. A two-stage steam ejector system (W11001A/B and W11002A/B) maintains a vacuum in the evaporator. Vapor from the steam ejectors is condensed in an inter-condenser (E11005) and an after-condenser (E11003). The condensate from the primary condenser, inter-condenser and after-condenser is sent to the process condensate pot (V11005). Condensate from the primary condenser is monitored continuously for activity. If the activity in the condensate is within specifications for transfer to the Process Condensate Collection System (System LP-510), the condensate is transferred to the process condensate vessels (V45028A/B/C) in the LAW pretreatment plant by the condensate transfer pump (P11066A/B), through the clean condensate valves (AV110116/7). If the activity of the condensate is not within Effluent Treatment Facility (ETF) specifications, the contaminated condensate is recycled to the filling LAW feed evaporator feed vessel (V11001A/B) by the condensate transfer pump (P11066A/B) through the contaminated condensate valve (AV110118/9). Non-condensable gases, which have been extracted from the evaporator system, pass to the Pretreatment Vessel Vent System (System PT-540/770) via the demister (V11010).

4. Functions

4.1. Functional Requirements

The primary function of the Low Activity Waste (LAW) Feed Evaporator is to reduce the throughput volume of the ultrafiltration process and subsequent unit processes downstream of the evaporation system. The LAW Feed Evaporator receives LAW feed and miscellaneous recycle streams.

To achieve the primary function, the LAW Feed Evaporator system contains equipment that performs the following unit operations:

- Receiving Waste
- Transferring Liquors
- Evaporating Waste
- Condensing Vapor and Venting Non-Condensable Gases

These unit operations accomplish the primary function, reducing the downstream volume. The operational functions can include one or more of the following functional purpose:

- Contain the waste

- Monitor/control system
- Sample process streams

A description of the work activities is shown in Table 1. Table 2 presents a description of the operational functions and associated work activities.

4.2. Safety Related Functions

The design of the system will minimize the risk of breach of primary containment. The following principles will be adopted:

- Vessels will have level instrumentation with high alarm and trip functions to minimize the chances of overflowing.

- Vessels will have a designated overflow route designed to handle the largest possible flowrate into the vessel. The overflow routes are as follows:

  1. V11001A/B – overflow to each other with ultimate overflow to the plant wash vessel (V15009, PT-550)

  2. V11004 – overflows to V11001B

  3. V11005 – overflows to the plant wash vessel (V15009, System PT-540)

  4. V11051A – overflows to evaporate concentrate buffer vessel A (V12010A, System PT-230)

  5. V11051B – overflows to evaporate concentrate buffer vessel B (V12010B, System PT-230)

  6. V11002 – overflows to V11005 via E11002

- In case of an incell equipment failure, the waste will be contained in the secondary containment (C5 cell) from where there will be an engineered route back into the process.

- Detection of leak via cell sump level instrumentation and provision to remove waste from the sump.

- Monitoring of the steam condensate from the reboiler (E11001) for process liquor breakthrough.

- The condensate from the primary condenser will be monitored for activity breakthrough from the evaporator.

- Local area monitor in the condenser room.

- The cooling water return lines used by the overheads condensers will be monitored to ensure that a breach of primary containment due to a heat exchanger tube failure is detected and appropriate action can be taken.

- A cell liner wash system for decontaminating the process cell will be provided. The process cell will be lined with stainless steel to contain the largest credible leak.

- Monitoring the pressure drop across the demister in the separator vessel (V11002), by pressure instrumentation.

- Controlling the vacuum in the separator vessel by a controlled air inbleed into the vapor discharge line from the primary condenser (E11002). A pressure instrument on the separator vessel will modulate the air inbleed valve. Primary pressure measurement is for the sub-atmospheric control of the vessel. A second pressure measurement would provide information and control for atmospheric and elevated pressure.

5. Normal Operations

The LAW feed evaporator feed tanks (V11001A/B) operate in opposite stages of their cycles i.e. while V11001A is filling; V11001B is emptying and vice versa. V11001A/B are sized to accept the daily feed from the following sources:

- Offspec effluent from the plant wash vessel, V15009 (System PT-550).

- Contaminated process condensate from the contaminated effluent vessels V15013/18 (System PT-550).

- Recycled flush liquor from the Spent Resin System, resin flush collection vessel V43136 (System LP-370)

- Entrained solids wash permeate recycle from the permeate hold vessels V12015A/B.(System PT-230)

- HLW ultrafiltration permeate from the HLW ultrafiltration permeate collection vessels V12006A/B/C (System PT-220)

- LAW feed from the LAW receipt vessels V11020A-F (System PT-110)

- Contaminated process condensate from the process condensate pot V11005

The evaporator is fed by RFD's (P11001A/B, P11002A/B) within the LAW feed evaporator feed vessels (V11001A/B). The evaporator feed is pumped to the LAW feed evaporator feed breakpot (V11004) from where it drains by gravity through a lutepot (V11050) and enters the evaporator recirculation loop on the suction side of the recirculation pump (P11004). When the recirculating liquor reaches the separator vessel, flash evaporation occurs due to the reduced pressure in the vessel. This reduced pressure lowers the boiling point of the liquor. This reduction in boiling point prevents corrosion of the evaporator by chlorides, which may be present in the LAW feed.

The evaporator is operated in a semi-batch mode of operation. The evaporation occurs continuously but the feed to the recirculation loop and concentrate offtake from the recirculation loop occur batchwise. This is accomplished by controlling the level in the evaporator separator vessel between a high and low setpoint. When the level falls to the low setpoint the LAW feed RFD in the feeding vessel (P11001A/B in V11001A or P11002A/B in V11001B) pumps evaporator feed into the recirculation loop until the level in the separator vessel reaches the high level setpoint. The evaporator boils the liquor until either the required product density or the low level setpoint is reached. If the required product density is reached, the concentrate offtake RFD (P11003A/B or P11043A/B) is operated. Concentrate product is pumped from the evaporator recirculation loop until the low level setpoint in the separator vessel is reached. The

use of P11003A/B or P11043A/B to pump concentrate product from the evaporator depends upon which of the two evaporator concentrate buffer vessels (V12010A/B) is in filling mode. P11003A/B pumps to V12010A via pulsepot V11051A. P11043A/B pumps to V12010B via breakpot V11051B. Once the concentrate offtake is complete (i.e. the low level setpoint in V11002 is reached), the LAW feed RFD's are started to refill the evaporator recirculation loop back to the high level control point in the separator vessel. If the low level setpoint in the separator vessel is reached due to evaporation without attaining the required evaporator product density the LAW feed RFD's (P11001A/B or P11002A/B) are started again to refill the evaporator recirculation loop to the high level setpoint in the separator vessel. This mode of operation allows the evaporator to handle a wide range of throughputs and evaporator feed concentrations. It enables the evaporators to run plant wash liquors through the process by boiling off the water fraction. The pressure in the separator vessel is maintained by a controlled inbleed of air into the suction side of the primary vacuum ejector (W11001A/B). If the pressure in the separator vessel rises, the air inbleed is reduced to allow more vapor to be drawn from the separator vessel, reducing the pressure.

The overheads from the evaporator are routed to the primary condenser (E11002) where the majority of the moisture is removed. The non-condensables from the primary condenser pass to the primary vacuum ejector (W11001A/B) which maintains a constant depression on its suction side. The motive steam from the primary vacuum ejector and the non-condensables pass through the intercondenser (E11005) where the ejector steam is condensed. The non-condensables from the intercondenser are routed to the secondary vacuum ejector (W11002A/B) which maintains a constant depression on its suction side. The motive steam from the secondary vacuum ejector is condensed out in the aftercondenser (E11003). The non-condensables from the aftercondenser pass through the demister (V11010) which removes entrained droplets from the aftercondenser prior to the non-condensables going to the vessel vent system. The condensate from the primary condenser, the intercondenser, the aftercondenser and the disentrained droplets from the demister are all routed independently to the LAW feed evaporator process condensate pot (V11005). This radiation monitor detects breakthrough of activity from the evaporator separator vessel (V11002). Under normal operations, the process condensate in V11005 is within ETF specifications and the process condensate pot is emptied by opening one of the clean condensate transfer valves (AV110116/7) which routes the condensate to the process condensate vessels (V45028A/B/C). The condensate transfer is carried out the condensate transfer pump (P11066A/B) and the condensate transfer valves, the operation of which is controlled by the level in the process condensate pot and the primary condenser condensate radiation monitor.

6. Safety and Interlock Requirements

Table 3 contains control actions taken as a response to specific plant conditions.

Table 1. Work Activities for LAW Evaporator Feed System

Work Activity	Short Title	Definition
Contain the Waste	Contain	Process equipment will be monitored for failure/leakage.
Monitor/Control System	Monitor	Instrumentation and sampling will be used to monitor and control the system's operation.
Sample Process Streams	Sample	Sampling at feed tanks will be used to determine downstream unit operation processing parameters and to confirm quality of upstream unit operation processing.
Process/Evaporate Waste	Process	Perform untreated liquid transfer, evaporation, condensation and transfer of product streams.

Table 2. Description of the Operational Functions and Work Activities for LAW Evaporator Feed System

Operational Function	Work Activities	Functional Description
Receiving Waste	Process	System sized to accommodate LAW feed and LAW recycled streams. *Equipment* – V11001A, V11001B
	Contain	Sump level instrumentation detects and stops leaks into cell.
	Monitor	Level on V11001A, V11001B to prevent and detect overfill.
Transferring Liquor	Process	Pump process waste from receipt tanks to the LAW feed evaporator feed breakpot using RFD's and gravity feed through the LAW feed evaporator lutepot to the recirculation loop. *Equipment* – P11001A/B, P11002A/B, V11004, V11050
	Monitor	Monitor level in lutepot (V11050) to detect blockage or loss of lute and hence loss of segregation of atmospheric and vacuum system. Monitor level changes in Feed Tanks (V11001A, V11001B)
Evaporating Waste		System sized to accommodate LAW feeds and LAW recycled streams. *Equipment* – E11001, P11004, V11002
	Monitor	Density, level, temperature, sub-atmospheric pressure, atmospheric and elevated pressure, differential pressure across disentrainment pad on V11002. Steam supply to E11001. Contamination of condensate leaving E11001.
Transferring Liquor	Process	Waste product from recirculation loop is pumped to the LAW feed evaporator concentrate transfer breakpot and gravity feeds to the LAW Ultrafiltration System (V12010A/B) *Equipment* – P11003A/B, P11043A/B, V11051A/B, V12010A/B
	Monitor	Liquid level in the separator vessel controls RFD (P11003A/B, P11043A/B) operation. The RFD (P11003A/B, P11043A/B) operates intermittently. It is controlled by the density and level in the separator vessel (V11002).
Condensing Vapor And Venting Non-Condensable Gases	Process	Vapor from the separator vessel is condensed in the primary condenser (E11002) and by the inter-condenser (E11005) and after-condenser (E11003). Condensate is routed to the condensate pot (V11005). Non-condensable gases are routed through the demister (V11010) and vented to the vessel vent system. *Equipment* – E11002, E11003, E11005, V11005, V11010, W11001A/B, W11002A/B
	Monitor	Level in V11005, differential temperature of cooling water across condensers (E11002/3/5) and contamination in cooling water return lines.
Transferring Liquor	Process	Condensate that is within LERF/ETF specifications is transferred to the Process Condensate Collection System (System LP-510). Condensate not within LERF/ETF specifications is recycled back to the filling LAW receipt vessel (V11001A/B) *Equipment* – P11066A/B
	Monitor	Contamination in primary condenser condensate and cooling water return lines, level in V11005.
Transferring Liquor	Process	Wash and transfer the contents of the LAW feed evaporator lutepot (V11050) to the LAW concentrate buffer tank (V12010A/B). *Equipment* – W11058

Table 3. Trip Actions Taken as a Response to Specific Plant Conditions

Condition	Control System Response
High-high level in V11001A/B	Stop all pumps capable of transferring liquor to V11001A/B.
High-high level in LAW feed evaporator lutepot (V11050)	Stop evaporator RFD (P11001A/B & P11002A/B) in V11001A/B. Initiate lutepot swirlwash and ejector to clear any solid deposits in the lutepot.
High-high level in separator vessel (V11002)	Stop evaporator RFD P11001A/B & P11002A/B) in V11001A/B.
Low-low level in separator vessel (V11002)	Stop evaporator concentrate offtake RFD (P11003A/B).
Low level in the process condensate vessel (V11005)	Close clean and contaminated condensate transfer valves (AV110116//7/8/9)

PT System 210: HLW Feed Receipt

1. Introduction and Scope

The high-level waste (HLW) feed receipt system (shown on DWG-W375PT-PR00016 *HLW Feed Receipt and Pretreatment* - System PT-210) receives HLW feed from the Hanford Double Shell Tank (DST) system unit and concentrated HLW slurries from Pretreatment systems. It stages these slurries for processing by the HLW Pretreatment System, and for blending by System PT-220. This document describes the operation of the equipment within System PT-210 for all modes of operations.

2. Process Description

The process descriptions contained in this section are general descriptions on how the system will operate. The pretreated HLW solids are expected to be returned from System PT-220 for storage at approximately 20 weight percent solids. The system is also capable of receiving and staging effluents from the ultrafilter cleaning operations and effluents from HLW Vitrification. In addition to this, the system will receive and stage strontium/TRU precipitate and entrained solids products from LAW pretreatment operations.

3. Functions

3.1. Primary Functions

The primary functions of a system are defined as what the system is designed to accomplish during normal processing operations. The primary functions of System PT-210 are:

- Receive and stage HLW feed from the DST
- Receive and stage HLW process slurries from Pretreatment Systems
- Receive and stage HLW effluents

System PT-210 will receive and stage HLW feed from the DST during all phases of operation. The waste is staged for subsequent processing in System 220, HLW pretreatment.

Staging of solids from LAW pretreatment is required for the Sr/TRU precipitate and entrained solids that have been determined to be HLW.

Effluent streams from HLW vitrification originate from vitrification offgas treatment equipment. Other effluents collected by System 210 are from ultrafilter cleaning operations.

3.2. Operating Functions

Operating functions are defined as the functions necessary to accomplish the primary functions (listed above). The list of necessary operating functions is shown below.

- Receive HLW slurries
- Cool process streams
- Mix HLW slurries
- Sample process streams
- Add chemicals to HLW effluents
- Transfer HLW slurries

- Stage waste feed for pretreatment and blending
- Monitor system

Each of the operating functions listed above is defined in Table 1. Also given in Table 1 is a column giving the shorthand name that will be used to refer to each of the functions from this point forward and a column defining what phase the function is applicable to.

3.3. Safety Related Functions

Safety-related functions, which support operational functions are described below. These safety-related functions are always in effect during system operations as depicted in Figure 1, the Functional Flow Block Diagram.

- Containment of waste
  - vessel containment
  - cell containment
- Monitoring of chilled water lines for breakthrough
- Hydrogen mitigation
- Radiolytic heat removal

Figure 1 shows a simplified Functional Flow block diagram of System PT-210 broken up into the three operating modes.

Table 2 relates the Functional Flow Block Diagram (Figure 1) and its corresponding operating functions back to the equipment shown on DWG-W375PT-PR00016 to show how the functions relate to the equipment shown on the PFD. The column "Corresponding Equipment" lists the major pieces of equipment that correspond to each of the blocks shown on Figure 1. It should be noted that the listing of a piece of equipment should be interpreted as including all of the equipment's periphery equipment and instrumentation (for example, instruments, reverse flow diverters, pulsejets, breakpots).

4. Normal Operations

4.1. System Overview

System PT-210 has been designed with a high degree of flexibility. Four of the six HLW feed receipt and storage vessels (V12001A/B/C/F) are interconnected via a header system. The remaining two vessels, V12001D/E, are joined by an additional header. These header systems allow for fluid to be transferred between connected vessels, should the need arise.

As continuous agitation is desired to maintain homogeneity in these vessels, the header is designed to allow for a continuous recirculation of fluid from any one of the vessels back to itself. The pumps have been sized to provide motive force sufficient for good agitation of the fluid. The system is also capable of diverting fluid from any recirculation loop to the downstream processes without interruption of this mixing.

Vessels V12001A/B/C/F are loosely arranged in two pairs, according to their primary functions. Vessels V12001D/E likewise comprise a vessel pair. The primary functions of these pairs is as follows:

Pair I: Vessels V12001B/F

These vessels are used primarily as HLW feed receipt and storage tanks. Their initial function is to store feed from the DST and transfer it to the HLW ultrafiltration feed tanks (V12004A/B) for processing. During the latter phases of operation, they may be used as HLW solids storage tanks as necessary.

Pair II: Vessels A/C

The primary function of V12001A/C during the initial staging is to receive HLW as necessary and transfer feed to the HLW ultrafiltration feed tanks (V12004A/B, System PT-220). During latter operations they are utilized primarily as Sr/TRU receipt and storage tanks, but may be used for HLW solids storage tanks as necessary.

Pair III: Vessels D/E

The primary functions of this vessel pair are to receive and store HLW solids as generated from HLW ultrafiltration, and to feed the HLW Blend Vessel (V12007, System PT-220). They may also receive feed classified as HLW from the LAW pretreatment systems (e.g., entrained solids) as required.

Other vessel functions are as follows:

The HLW Effluent Collection Vessel (V12002) is designated as the collection vessel for all HLW acidic effluents arising from the ultrafilter cleaning process, as well as an acidic stream from the HLW Vitrification process (SBS purge). It is also the designated emergency routing (overflow) vessel for all vessels within Systems PT-210 and PT-220 (with the exception of the Permeate Collection Vessels, V12006A/B/C).

Vessel V12001B receives, in addition to HLW Feed from the DST, caustic arisings from the ultrafilter cleaning process, and solid material remaining in the Ultrafilter Feed Vessels (V12004A/B) following transfer of concentrated solids to V12001D/E. It also receives all plant washings from the vessels within PT-210/220, with the exception of the Permeate Collection Vessels (V12006A/B/C).

4.2. Fluid Transport

Fluid is transported through System PT-210 with a combination of centrifugal pumps and Reverse Flow Diverters (RFD's). Vessels that contain solids (V12001A/B/C/D/E/F) utilize centrifugal pumps and vessels that do not (V12002) use RFD's.

The header system connecting vessels V12001A/B/C/F allows for transport between any two vessels, with the following restriction:

- Fluid may be transferred between vessel pairs I and II (i.e., from one train to another) only if both pumps in the receiving train are not in operation

5. Safety and Interlock Requirements

5.1. Normal Process Operation and Control

5.1.1. Leak Detection

The cell will be lined with stainless steel and level measurement will indicate leakage into the cell. Signals will be routed to the Central Control Room (CCR) within the pretreatment plant when leaks are detected. The stainless steel lined cell will be fitted with a cladding wash system for decontamination and decommissioning purposes. Cell wash down is collected in a sump, and a steam ejector is used to empty the sump to the HLW Effluent Collection Vessel (V12002).

The co-axial lines through which feed is received from the DST are equipped with a leak-detection system. In the event that a leak in the transfer line is detected, all transfer operations will immediately cease.

5.1.2. Hydrogen Mitigation

The design of the system will enable for hydrogen gas produced by radiolytic decay to be diluted to safe levels with a continuous air purge via a nozzle. The nozzle is located such that it is away from the vessel vent to enhance cross flow, but will also be located such that there is no way that it can be blocked during an overflow situation.

5.1.3. Level Control and Overflow Routing

All vessels have level monitoring instrumentation. A scaled alarm/trip system is used to prevent over filling and subsequent introduction of fluid into the vessel vent system. This system consists of:

i) High level alarm at about 8% over normal batch volume
ii) High level trip at level equivalent to about 30 minutes fluid input over and above the high level alarm, based on single highest input flow rate to vessel
iii) High-high level trip set just below overflow nozzle
iv) Passive overflow to appropriate vessels

The passive overflow routings shown in Table 3 are assigned.

5.1.4. Heat Management

Internal resistive temperature devices (RTD's) are installed in each vessel. The number of RTD's within each vessel will vary depending upon vessel content characteristics (e.g., high solids, high viscosity). These signals are routed to the CCR, and are used to control the flow of chilled water to cooling coils, and to indicate whether mixing is occurring.

Waste received from the DST may be received at elevated temperatures. System PT-220 requires that the waste be processed at approximately 77°F (25°C). To this effect, cooling coils serviced by chilled water are installed within each of the feed receipt vessels. They will serve to cool the waste upon receipt from the DST in a timely manner. During normal lag storage operations the coils will also serve to remove any radiolytic heat generation from the feed, and maintaining a constant temperature.

A cooling coil is also installed in V12002 to remove the heat generated from the neutralization of the acidic effluent streams prior to re-processing.

5.1.5. Breakthrough Monitoring

Breakthrough monitoring will be used for equipment or vessels receiving plant services such as chilled water. The monitor will trip the system on detection of breakthrough.

5.2. Interlocks within HLW Feed Pretreatment System PT-210

Control points shown on DWG-W375PT-PR00016 are summarized in Table 4.

Interface Control Points

- The contents of the HLW feed receipt tank (System PT-210) feeding System PT-220 are sampled to specify the ultrafiltration rate required to concentrate to approximately 20 weight percent solids and also to determine parameters for pretreatment.

- The contents of V12001A/B/C/D/E/F are sampled to set the parameters for HLW vitrification (i.e., amount and type of glass formers to add)

5.3. Other

Other design features include the following:

- Influent lines to particular vessels are valved or luted to guard against backflow.

- All vessel vent lines are given consideration to hydrostatic positioning (to prevent liquid from entering the system).

- Lute pots are fitted with water flush capability in order to clear any potential line blockages.

Table 1. Operating Functions for HLW Feed Receipt System PT-210

Function	Shorthand Name	Definition
Receive HLW Slurries	Receive	Receive HLW feed from the DST, HLW slurry from Pretreatment systems and HLW effluents
Cool Process Streams	Cool	Cool process slurries to facilitate processing (filtration) and to reduce corrosion of process equipment
Mix HLW Slurry	Mix	The system will mix slurries to facilitate sampling, the neutralization of acids, the dissipation of heat and the transport of solids
Sample Process Streams	Sample	Sampling will be used to determine downstream unit operation processing parameters and to confirm quality of upstream unit operation processing.
Add Chemicals to HLW Effluents	Adjust	Chemicals are required to convert acidic HLW effluents into a basic stream
Transfer HLW Slurries	Transfer	The system will be sized to meet plant throughput requirements
Stage Waste Feed for Pretreatment and Blending	Stage	The system will provide safe and reliable storage for HLW effluents and slurries
Monitor System	Monitor	The system will be capable of monitoring system operation.

Table 2. Operational Functions as Shown on the PFD

Operational Block	Operating Function	Operating Function	Corresponding Equipment
Receive and stage HLW Feed from the DST	Receive	The system will be capable of receiving waste feed from the DST.	V12001A V12001B V12001F P12032A/B P12033A/B
	Cool	The system will be capable of cooling waste received from the DST so that it is ready for sampling and ultrafiltration.	
	Mix	The system will be capable of mixing the contents of the waste receipt vessels so that the samples taken from the vessel are representative of the entire contents. The system will also mix HLW slurries to facilitate the dissipation of heat.	
	Sample	The system will be capable of sampling the contents of each receipt vessel.	
	Transfer	The system will be capable of transporting characterized waste feed to the HLW Pretreatment System (HLW ultrafilter feed vessels V12004A/B). The system will also be capable of transporting HLW slurries to the DST.	
	Stage	The system will provide safe and reliable storage of HLW Feed from the DST.	
	Monitor	The system will be capable of monitoring all of its operations.	
Receive and Stage HLW Process Slurries from Pretreatment Systems	Receive	The system will be capable of receiving concentrated slurries from System 230, LAW Ultrafiltration and System 220, HLW Pretreatment. HLW streams from LAW pretreatment will be routed to V12001A/C. Pre-treated HLW solids will be routed to V12001D/E.	V12001A V12001C V12001D V12001E P12033A/B P12034A/B
	Mix	The system will be capable of mixing the contents of the waste receipt vessels so that the samples taken from the vessel are representative of the entire contents. The system will also mix HLW slurries to facilitate the dissipation of heat.	
	Sample	The system will be capable of sampling the contents of each vessel.	
	Transfer	The system will be capable of transporting characterized HLW slurries to the HLW Blending Vessel, V12007.	
	Stage	The system will provide safe and reliable storage of HLW process slurries from pretreatment systems.	
	Monitor	The system will be capable of monitoring all of its operations.	

Table 2. Operational Functions as Shown on the PFD

Operational Block	Operating Function	Operating Function	Corresponding Equipment
Receive and Stage HLW Effluents	Receive	The system will be capable of receiving acidic and caustic effluents from System 220, HLW Pretreatment, and from HLW Vitrification.	V12002
	Mix	The system will be capable of mixing the contents of the waste receipt vessels so that the samples taken from the vessel are representative of the entire contents. The system will also mix HLW slurries to facilitate the dissipation of heat.	
	Sample	The system will be capable of sampling the contents of each vessel.	
	Adjust	The system will be capable of adding caustic reagents to the vessel contents.	
	Cool	The system will be capable of removing the heat generated by acid-base reactions.	
	Transfer	The system will be capable of transporting adjusted effluents to V12001B for staging for ultrafiltration.	
	Stage	The system will provide safe and reliable storage of HLW effluents.	
	Monitor	The system will be capable of monitoring all of its operations.	

Table 3. Overflow Routings for HLW Feed Receipt System PT-210

Vessel	Overflow Route
V12001A	V12001F
V12001B	V12001F
V12001C	V12002
V12001D	V12002
V12001E	V12002
V12001F	V12001A/B high-overflow ultimately cascades to V12002
V12002	V15009

Table 4. Instrument Description for HLW Feed Receipt System PT-210

Inst. No.	Description	Control Action	Interlocks
L120091 L120001 L120021 L120041 L120071 L120081 L120086	Level on V12002 Level on V12001A Level on V12001B Level on V12001C Level on V12001D Level on V12001E Level on V12001F	During normal operations tank levels will be monitored Feed receipt confirmation Determination of sufficient level to support agitation (PJM operation)	High level will trip infeed streams Low level will trip outfeed streams and protect internal devices from operating
T120096 T120098 T120089 T120101	Temp on V12003A Temp on V12003B Temp on V12356 Temp on V12369	Monitor temperature in breakpot	High temperature will inhibit all feeds to breakpot
T120092 T120002 T120022 T120042 T120072 T120082 T120087	Temp on V12002 Temp on V12001A Temp on V12001B Temp on V12001C Temp on V12001D Temp on V12001E Temp on V12001F	Cool waste upon receipt from DST Maintain constant temperature of 77°F during normal operations	High temperature reading will initiate chilled water flow to cooling coil
	Leak Detection on Co-Axial Transfer line from DST		Detection of leak will trip transfer pumps

Figure 1. Functional Flow Block Diagram

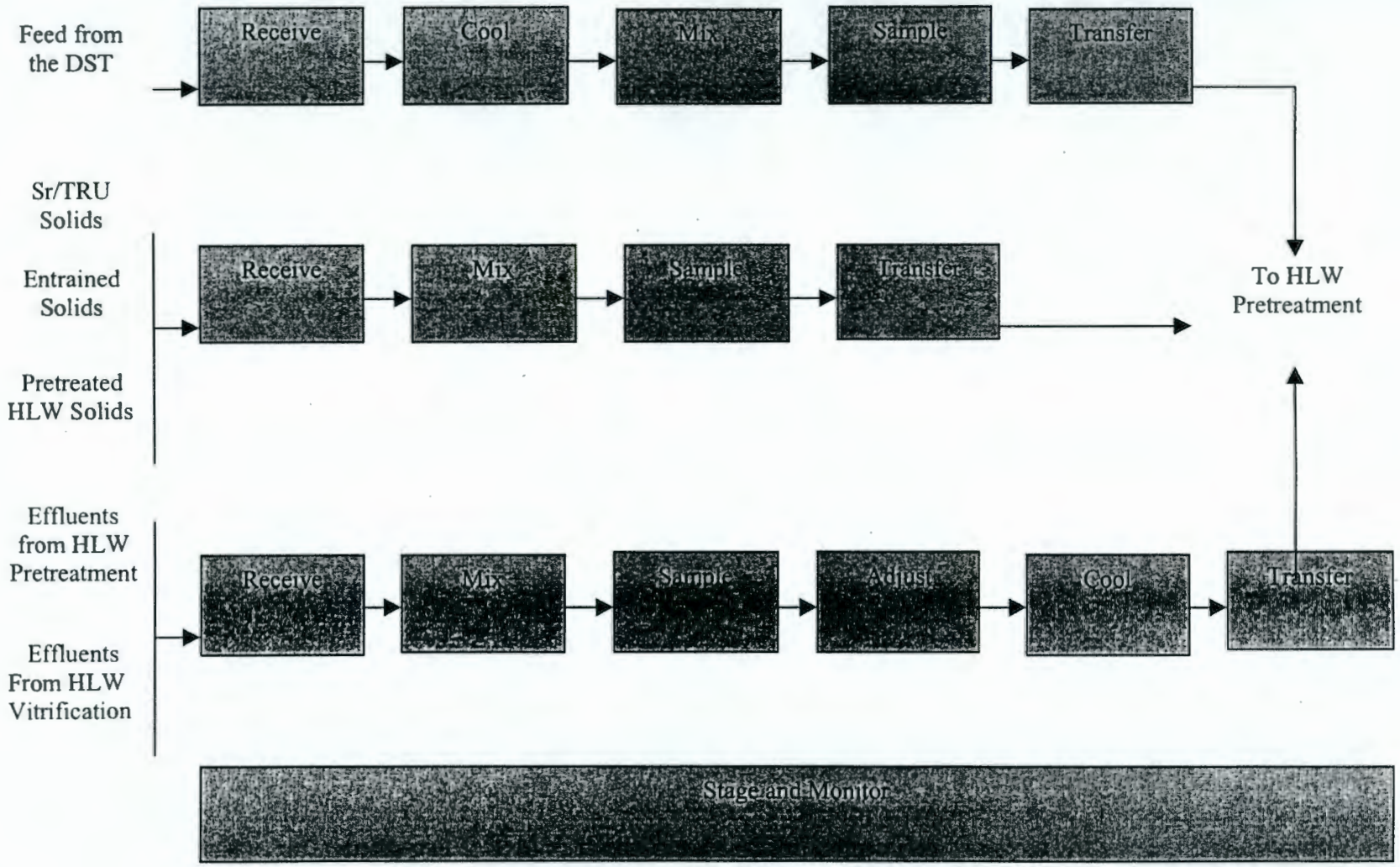

PT System 220: HLW Pretreatment

1. Introduction and Scope

HLW feed, consisting of solids (Envelope D) and liquids (Envelope A, B, or C) is fed to the HLW Feed Pretreatment System PT-220 via HLW Feed Receipt System PT-210. System PT-220 will separate the solid and the liquid fractions by an ultrafiltration process. If necessary, the separated solids fraction will be treated (washed). The feed liquid, or permeate, fraction is combined with the liquid fraction generated from the solids wash cycle and routed to LAW Pretreatment System. The treated solids are routed to the HLW Feed Receipt System (System PT-210) for storage. From System PT-210, the solids are transferred back to System PT-220 where they are combined with streams from LAW pre-treatment and routed to HLW vitrification.

This document defines the functions and describes the processes that are used to separate the HLW solids from the LAW liquids and treat the HLW solids.

2. Applicable Document

This process description should be read in conjunction with process flow diagram (PFD) DWG-W375PT-PR00016, *HLW Feed Receipt and Pretreatment.*

3. Process Descriptions

The process description contained in this section is a general description on how the system will operate.

System PT-220 consists of two parallel ultrafilter circuits each containing two banks of ultrafilters. HLW feed is normally routed from System PT-210 (V12001A/B/C/F) to the HLW ultrafiltration feed tanks (V12004A/B) in System PT-220.

During ultrafiltration, smaller transfers will be received on a semi-continuous basis to make up for the permeate volume loss and keep the feed tank at capacity until the desired volume of concentrated solid slurry has been generated. Permeate from the ultrafilter will collect in the permeate collection vessels V12006A/B, and concentrated solids will collect in the Ultrafilter Feed Vessel until the concentration of solids has reached approximately 20 wt. %.

If additional treatment (washing, or leaching) of the solids is warranted, this will occur in the Ultrafilter Feed Vessel. The leaching stage consists of three steps; a dilute caustic wash (to remove interstitial sodium ions by dilution), a concentrated caustic wash during which the solution is heated and summarily cooled (to leach aluminum into solution), and a final dilute caustic wash again to remove interstitial sodium ions by dilution. Following each wash step is an ultrafiltration stage to concentrate the resulting slurry. Wash liquor (permeate) is collected in V12006C, and eventually routed back to either the LAW feed evaporator vessels (V1101A/B) or the LAW Feed Receipt Tank (V11020D).

The solids resulting from ultrafiltration are routed to Envelope D Receipt Vessels (V12001D/E, System PT-210). From these storage vessels, solids are routed to the HLW feed blending vessel (V12007). In this vessel the treated HLW solids are combined with the concentrated Cs/Tc stream from System PT-320, (Cesium Nitric Acid Recovery), and the Sr/TRU solids stream from System PT-230 (LAW Ultrafiltration) via System PT-210, before being routed to HLW vitrification.

4. Functions

4.1. Primary Functions

The two primary functions of System PT-220 are:

- Separate solids from liquids
- Blend wastes to HLW vitrification

The "separate solids from liquids" function pertains to the removal of the low level portion (liquid) from the high level portion (solids). This includes the initial separation of the Envelope A, B, or C from the Envelope D as well as the separation of the liquid wash/treat portion from the HLW solids. Treatment of the separated solids pertains to solids washing with process water as well as the addition of chemicals to dissolve selected components present in the HLW solids. Blending the wastes for HLW vitrification pertains to the blending of the treated HLW solids from System PT-220 with the HLW streams from LAW pre-treatment, which may include Cs/Tc eluate from ion exchange, entrained solids from LAW ultrafiltration, and Sr/TRU solids from LAW ultrafiltration.

4.2. Operating Functions

The list of operating functions is shown below for System PT-220.

- Receive the waste
- Separate solids/liquids
- Sample process streams
- Treat solids (water and/or caustic washing)
- Chemical additions
- Store intermediate products
- Blend HLW feed
- Monitor system
- Contain the waste
- Transfer the waste
- Maintain homogeneity in Feed Vessels and HLW Blend Vessel

Each of the operating functions listed above is defined in Table 1. Also given in Table 1 is a shorthand name that is used to refer to each of the functions from this point forward in this system description.

4.3. Safety Related Functions

Safety related functions support the operational functions described below.

- Containment of waste
  - vessel containment
  - cell containment
- Monitoring of chilled water lines for breakthrough
- Hydrogen mitigation
- Radiolytic heat removal

Figure 1 shows a simplified operational block diagram of the HLW feed pre-treatment system. Also on Figure 1, a table was created to show which operating function is in use for each unit operation. The table is broken up into columns where each column immediately below a block corresponds to that block. As can be seen from the table, in many instances one unit operation applies to more than one operating function.

Table 2 relates the Operational Block Diagram (Figure 1) and its corresponding operating function table back to the equipment shown on DWG-W375PT-PR00016 to show how the functions relate to the equipment shown on this drawing. This table also summarizes the relationship between the safety and operational functions described above. The column "Corresponding Equipment" lists the major pieces of equipment that correspond to each of the operation blocks shown on Figure 1. It should be noted that the listing of a piece of equipment should be interpreted as including all of the equipment's periphery equipment and instrumentation (instruments, reverse flow diverters, pulsejets, breakpots, etc.).

5. Normal Operations

5.1. Normal Operations Sequence

During normal operations, one of the ultrafilter trains is in operation, the other either in a standby mode or is undergoing a cleaning cycle.

The size of the initial batch to be transferred from System PT-210 is set according to the allowable operating volume of V12004A/B. Once feed has been received into V12004A/B, the ultrafiltration re-circulation pump P12001A/B is primed and the ultrafiltration loop, consisting of two sets of ultrafilter banks is set up with the permeate lines closed. The recirculation pump is started, forcing fluid through the system. The pressure in the re-circulation loop will then be adjusted at the inlet to the first module by adjusting the recirculation pump flow rate. Once this pressure has been established in the loop, the ultrafilter permeate lines will be opened and concentration begins.

Permeate is routed through pulse pots (V12005 A/B and V12099A/B) before collecting in one of three HLW Ultrafiltration Permeate Collection Vessels (V12006A/B/C, depending on which loop is being operated). The solids fraction is re-circulated to the ultrafiltration feed tank (V12004 A/B), and then pumped back through the ultrafiltration loop. To account for the volume loss in the feed tanks as permeate is collected, fresh feed is periodically received during the concentration phase from System PT-210. Concentration continues until approximately 15,000 gallons of approximately 20 wt. % solids are generated in the ultrafiltration feed tank.

If the initial sample indicates that caustic washing of the concentrated solids is warranted, the following wash steps will be implemented:

- Solids Wash Step 1

Wash the solids with low-active process water. The water is conditioned by adding caustic as necessary to the vessel contents. The wash solution will be added while the ultrafilter loop is running to dilute out and remove the interstitial liquid from the solids. The permeate from this step, being considerably more dilute than the mother liquor permeate, will be collected in the Permeate Collection Vessel V12006C.

- Solids Wash Step 2

Add sodium hydroxide.

- Wash Step 3

The resulting solution will be heated, digested, then cooled back to ambient temperature.

- Wash Step 4

The solids will be washed with sodium hydroxide solution or process water. The solution will be added while the ultrafilter loop is running to dilute out and remove the interstitial liquid from the solids and to re-concentrate the slurry to approximately 20 wt. %. Again, the permeate collected from this step, being considerably more dilute than the mother liquor permeate, will be collected in the Permeate Collection Vessel V12006C.

This is the end of the wash stage, and the remainder of the operation holds for both washed and unwashed concentrated solids.

The contents of V12004A/B are then transferred to the Envelope D Receipt Vessels V12001D/E.

Permeate is normally routed from V12006A/B to the LAW Feed Evaporator Feed Tanks (V11001A/B, PT-120) for processing. The wash permeate, having a high water concentration, may either be routed to the LAW Feed Evaporator Feed Tanks or to the LAW Feed Receipt Vessel (V11020D, System PT-110), depending on the evaporator loading at the time. Off specification permeate may be routed back to the ultrafilter feed vessels if necessary.

A "campaign" consists of one complete cycle of receiving feed, concentrating to about 20% solids, and washing the solids as necessary. The volume of solids generated from a campaign will provide approximately three days worth of feed to HLW vitrification. After a campaign, the ultrafilters must be cleaned (see proposed cleaning schemes for the ultrafilters).

Feed blending for HLW vitrification will occur in the HLW Feed Blending Vessel (V12007). The HLW concentrated solids may be blended with contents of

- Spent resin collection vessels (V43135A/B)
- Sr/TRU solid stream as generated (V12001A/C)
- Cs/Tc concentrate storage tank (V13073)

The amount of each waste stream received will need to be coordinated with one another, but this action is outside the scope of this document. From V12007 the waste is routed to the HLW Feed Buffer Vessels (V31002 or V31001) via P12002A/B.

5.1.1. Proposed Cleaning Schemes for the Ultrafilters

Cleansing of the ultrafilters is accomplished in one of three ways. The first consists of back pulsing the filters with permeate utilizing high-pressure air as the motive force. The second option is to wash the ultrafilter loop with nitric acid and the third option is to wash with caustic. Cleaning with either acid or caustic will be carried out periodically after a completed campaign. The periodicity of back pulsing is intermittent, but occurs frequently as a normal operation of the ultrafilter loop (i.e. during a campaign).

All of the options related to filter cleaning refer to Figure 2.

5.2. Fluid Transport

Fluid is transported through the HLW ultrafiltration system with centrifugal pumps and RFDs. The routing is as follows (equipment outside this system shown in italics):

6. Safety and Interlock Requirements

6.1. Normal Process Operation and Control

6.1.1. Leak Detection

The cell will be lined with stainless steel and level measurement will indicate leakage into the cell. Signals are routed to the Central Control Room (CCR) within the pre-treatment facility when leaks are detected. The stainless steel clad cell will be fitted with a cladding wash system for decontamination and decommissioning purposes. Cell wash down is collected in a sump, and a steam ejector is used to transfer sump fluid to the HLW Feed Receipt Vessel V12001B). In the event of a sump going into a high-high alarm, all prime movers into and out of cell will be stopped.

6.1.2. Hydrogen Mitigation

The design of the system will enable dilution of hydrogen gas produced by radiolytic decay to safe levels with a continuous air purge via a nozzle. The nozzle is located such that it is away from the vessel vent to enhance cross flow, but will also be located such that there is no way that it can be blocked during an overflow situation.

6.1.3. Level Control and Overflow Routing

Levels in vessels V12004A/B (ultrafilter feed), V12006A/B/C (permeate collection), and V12007 (solids blending) are monitored by level measurement. A scaled alarm and trip system is used to prevent over filling and subsequent introduction of fluid into the vessel vent system. This system consists of:

i) High level alarm at about 8% over normal batch volume
ii) High level trip at level equivalent to approximately 30 minutes fluid input over and above the high level alarm, based on single highest input flow rate to vessel
iii) High-high level trip set just below overflow nozzle
iv) Passive overflow to appropriate vessels

Table 3 identifies the overflow routings for HLW Feed Pretreatment System 220.

6.1.4. Heat Management

In vessel resistive temperature devices (RTDs) are installed in each vessel. The number of RTDs within each vessel will vary depending upon vessel content characteristics (i.e. high solids, high viscosity). These signals are routed to the CCR, and are used to control the flow of chilled water and low/high pressure steam to vessel jackets and steam ejectors respectively, and to determine if adequate mixing is occurring.

6.1.5. Flow Monitoring

Flow instrumentation will be installed on specified waste transfer lines. Signals are routed to the CCR within the pre-treatment facility. The signal will be used to monitor the flow on selected transfer lines.

6.1.6. Breakthrough Monitoring

Breakthrough monitoring will be used for equipment or vessels receiving plant services such as chilled water. The monitor will trip the system on detection of breakthrough.

6.2. Interlocks within HLW Feed Pre-Treatment System PT-220

Control instruments shown on DWG-W375PT-PR00016 are summarized in Table 4.

6.3. Interface Control Points

- The contents of the HLW feed receipt tank (System PT-210) feeding System PT-220 are sampled to specify the ultrafiltration rate required to concentrate to about 20 weight percent solids

- The contents of the permeate collection vessels V12006A/B are sampled to ensure that the permeate falls within LAW specifications

- The contents of V12006C (solids wash collection vessel) are sampled to determine the appropriate destination in the LAW system

6.4. Other

Other design features include the following:

- Influent lines to particular vessels are valved or luted to guard against backflow

- All vessel vent lines are given consideration to hydrostatic positioning (to prevent liquid from entering the system)

- Lutes are fitted with water flush capability in order to clear any potential line blockages

Process cells are lined with stainless steel and any leakage into the cell is detected.

Table 1. Operating Functions for System PT-220

Function	Shorthand Name	Definition
Receive the Waste	Receive	The system is sized to support the throughput of the process
Separate Solids/Liquids	Separate	Solid/liquid separation is performed in support of one of the primary functions of the system.
Sample Process Streams	Sample	Sampling is used to determine downstream unit operation processing parameters and to confirm quality of upstream unit operation processing.
Treat Solids	Treat	Solids washing is used to wash out interstitial sodium from the solids.
Chemical Additions	Chem Add	Process water and/or caustic addition for solids washing and chemical additions or demineralized water addition for ultrafilter backflushing.
Store Intermediate Products	Store	These are the lag storage requirements for unit operations during normal processing operations.
Blend HLW Feed	Blend	Blending of treated HLW solids (System PT-210), Cs/Tc concentrate (System PT-340), and separated Sr/TRU solids (System PT-230) for feed to HLW vitrification.
Monitor System	Monitor	Instrumentation and sampling is used to monitor the system's operation.
Contain the Waste	Contain	Process equipment is monitored for failure/leakage.
Transfer the Waste	Transfer	The system is sized to support the throughput of the process

Table 2. Operational Functions as Shown on the PFD

Operational Block	Operating Function	Response to Operating Function	Corresponding Equipment
Chemical Additions	Chem Add	Process water and chemical reagent additions to V12004A/B for solids washing and treatment.	
Filter Feed Adjustment	Sample	Sample collection on V12004A/B.	V12004A/B
	Wash	See "Chemical Additions" above.	
	Monitor	Level, temperature, and density instruments on V12004A/B.	
	Agitate	Maintain homogeneity in vessel	
	Contain	Sump level instrument for leaks into cell.	
Ultrafiltration	Separate	Ultrafiltration circuit.	P12001A/B G12001A/B G12002A/B V12005A/B V12099A/B V12005A/B
	Wash	Filtration of solids from wash solutions.	
	Monitor	Outlet pump pressure. Differential pressure across ultrafilters. Ultrafiltration loop flow rate. Permeate flow Permeate conductivity	
	Agitate	Maintain homogeneity in vessel	
	Contain	Sump level instrument for leaks into cell.	
HLW Permeate Lag Storage	Store	Temporary storage of ultrafilter permeate.	V12006A/B/C
	Sample	Sample permeate and wash solutions	
	Monitor	Level, temperature, and density instruments on V12006A/B/C.	
	Agitate	Maintain homogeneity in vessel	
	Contain	Sump level instrument for leaks into cell.	
HLW Melter Feed Blending	Sample	Sample collection on V12007.	V12007
	Blend	Blending of treated HLW solids with Sr/TRU solids and concentrated Cs/Tc eluate from LAW pre-treatment operations.	
	Monitor	Level, temperature, and density instruments on V12007	
	Agitate	Maintain homogeneity in vessel	
	Contain	Sump level instrument for leaks into cell.	

Table 3. Overflow Routings for HLW Feed Pretreatment System 220

Vessel	Overflow Route
V12004A	V12002
V12004B	V12002
V12006A	V15009
V12006B	V15009
V12006C	V15009
V12007	V12002

Table 4. Instrument Description for HLW Feed Pre-treatment System PT-220

Inst. No.	Description	Control Action	Interlocks
L120121 L120166	Level on V12004A Level on V12004B	During normal U/F operations Feed tank levels will control HLW Feed Receipt pumps P12032A/B, P12033A/B to maintain level This signal will also control the operation of P12001A/B	High level will trip infeed streams (P12032A/B, P12033A/B) and service streams Low level will trip outfeed streams (P12001A/B), W12111, and steam heaters W12248A/B, W12249A/B
T120122 T12065	Temp on V12004A Temp on V12004B	Maintain constant temperature during normal operations by controlling chilled water to E12001A/B Control steam flow to ejector heaters W12248A/B, W12249A/B during heating phase of solids washing Control chilled water flow to E12001A/B during cooling phase of solids washing Control chilled water to cooling jackets in the event of a recirculation pump failure	High temperature reading will trip steam flow to ejector heaters; initiate cooling cycles if necessary
D120121 D120166	Density of V12004A Density of V12004B	Indicator of solids concentration. During normal operations data will be transmitted to algorithm governing filter operation	None
P120139A P120174A P120139B P120174B	Pressure at 1st filter module inlet Pressure at 2nd filter module outlet	Pressures used to calculate pressure drop across U/F modules (process side) and maintain necessary inlet pressure by adjusting pump speed.	High ΔP alarm
F120133 F120183	Flow in U/F recirculation loop	Monitor flow in ultrafilter loops (process side)	Low flow alarm
F120150 F120138 F120177 F120173	Flow rates in permeate lines exiting pulse pots	Monitor permeate flow through each ultrafilter module (permeate side) – used to troubleshoot filters if necessary	High flow alarm
C120141 C120176	Conductivity of permeate	Monitor conductivity as a measure of sodium concentration – used primarily to determine endpoint of solids wash stage	None

Table 4. Instrument Description for HLW Feed Pre-treatment System PT-220

Inst. No.	Description	Control Action	Interlocks
L120191 L120201 L120211	Level of V12006A Level of V12006B Level of V12006C	Measure level in permeate collection tanks	High level trip P12001A High level trip P12001B Trip incoming service streams Low level trip will protect internal devices from operating (e.g. RFD's)
T120192 T120202 T120212	Temp of V12006A Temp of V12006B Temp of V12006C	Measurement	None
D120191 D120201 D120211	Density of V12006A Density of V12006B Density of V12006C	Measurement	None
L120221	Level on V12007	Level measurement of V12007 will control the flow of the input streams (washed solids, Sr/TRU, Cs/Tc concentrate)	High level will trip input stream transfer pumps P12033A/B,P12034A/B, or modulate RFD pair P130138A/B Low level trip will protect internal devices from operating
T120222	Temp on V12007	Control of chilled water to vessel cooling jacket	High temperature reading will control chilled water flow to cooling jacket
D120221	Density on V12007	Measurement	None

Figure 1. Operational Block Diagram

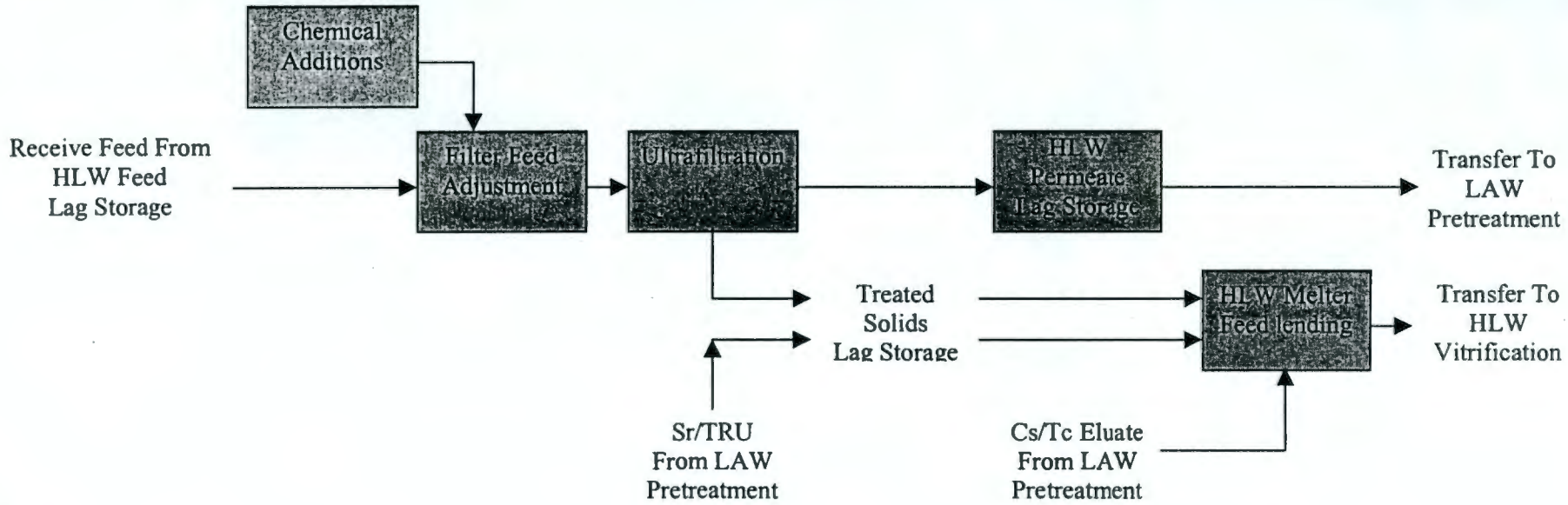

Operating Function

Receive							
			Separate				
		Sample			Sample	Sample	
		Treat	Treat				
	Chem Add						
					Store		
		Agitate	Agitate		Agitate	Agitate	
						Blend	
		Monitor	Monitor		Monitor	Monitor	
		Contain	Contain		Contain	Contain	Contain
							Transfer

Figure 2. Crossflow Filter Showing Backwash System

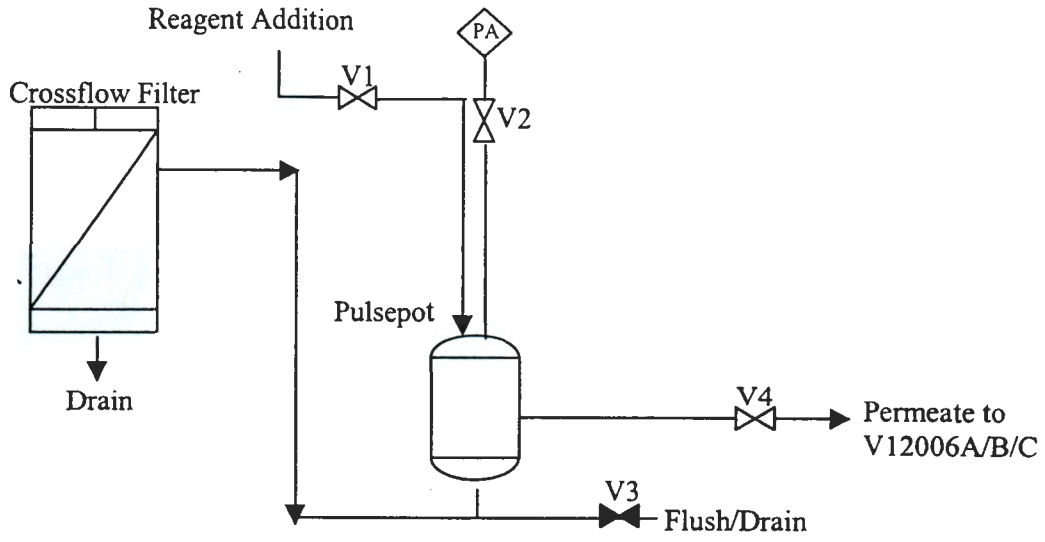

PT System 230: LAW Ultrafiltration

1. Introduction and Scope

The LAW Ultrafiltration System removes entrained solids and strontium/TRU from low activity waste (LAW) feed. The entrained solids are removed in order to protect downstream ion exchange beds and to meet specifications for the LAW glass product. The entrained solids slurry must be further concentrated to minimize storage requirements and to enhance vitrification efficiency. The removed entrained solids can be routed to one of three destinations:

1 Returned to the Double Shelled Tank (DST) system unit
2 Vitrified as LAW
3 Vitrified as HLW

In accordance with immobilized LAW (ILAW) glass specifications, the LAW Ultrafiltration System is also required to remove complexed strontium and transuranic elements (TRU) from the Envelope C feed. The baseline design calls for the removal of strontium/TRU by precipitation, filtering and then routing the concentrated strontium/TRU slurry to high level waste (HLW) vitrification.

This document defines the functions and requirements and describes the processes that are used to remove entrained solids from Envelope A LAW feed and the processes/operations that are used to precipitate and remove strontium/TRU from the Envelope C feed. The treatment of Envelope B Feed is described separately.

2. Applicable Documents

This process description should be read in conjunction with the following:

- PFD DWG-W375PT-PR00004, *LAW Ultrafiltration,* System PT-230

3. Process Descriptions

The process descriptions contained in this section are general descriptions on how the system operates. Due to the differences in processing operations, the summary level process descriptions below treat each envelope separately. The envelopes are labelled A, B and C. More detailed descriptions of operations can be found in section 5.

3.1. Envelope A

Envelope A feed is concentrated in the LAW Feed Evaporator (System PT-120) before being routed to the LAW ultrafiltration system (System PT-230). The dilute slurry is then processed through the LAW ultrafiltration loop to remove the solution and concentrate the slurry. The concentrated slurry is washed with active condensate and/or process water to reduce the sodium level in the entrained solids slurry. Permeate from the initial concentrated slurry is routed to Cesium Ion Exchange (System PT-310). The permeate from the solids washing is routed back to either the evaporator for concentration or it is routed to the evaporator concentrate hold vessels (V12010A/B) to dilute the evaporator product (if necessary). The removed entrained solids intermediate product is discharged to one of two entrained solids hold vessels before being adjusted to meet pipeline transfer conditions. The solids are then returned to the DST or routed to vitrification.

3.2. Envelope B

Envelope B (permeate from Envelope D) is first treated by separating out the Envelope D solids via the HLW Ultrafiltration filters and routing the Envelope B permeate to the LAW Feed Evaporator (System PT-120). During normal operations, concentrated Envelope B bypasses LAW Ultrafiltration (System PT-230) and is routed to Cesium Ion Exchange (System PT-310). After the removal of cesium and technetium from Envelope B, the stream is concentrated and processed by LAW vitrification.

3.3. Envelope C

Envelope C feed requires both entrained solids removal and strontium/TRU precipitation/removal. Envelope C feed is concentrated by evaporation (System PT-120) before being routed to the LAW Ultrafiltration System (System PT-230). Reagents are then added to precipitate transuranics and strontium. The resulting slurry is processed through the LAW ultrafilters until the solids are concentrated. The concentrated slurry consisting of entrained solids and strontium/TRU will be washed with active condensate and/or process water to reduce the sodium level within the slurry.

The washed strontium/TRU slurry is routed to HLW feed receipt (System PT-210). Permeate from the entrained solids and Sr/TRU slurry will be collected, diluted, and then routed to Cs Ion Exchange (System PT-310). Wash solution permeates are routed to the LAW Feed Evaporator (System PT-120).

4. Functions

4.1. Primary Functions

The three primary functions of System PT-230 are:

- Remove solids
- Precipitate and remove complexed strontium/TRU
- Store and return waste to the DST

Remove solids pertains to the removal of entrained solids and any solids generated by this system (strontium/TRU precipitation) from the feed stream. The precipitation and removal of complexed strontium/TRU pertains to the need to first precipitate Sr/TRU components from the Envelope C feed stream, then remove the strontium/TRU precipitate. The store and return waste function applies to the entrained solids. These solids are returned to the DST using the same pipelines used to receive LAW feed from the DST.

4.2. Operating Functions

Operating functions are defined as the functions necessary to accomplish the primary functions (listed above). These operating functions are considered non-safety related functions. The list of necessary operating functions for System 230 is shown below.

- Receive waste feed
- Cool waste feed
- Sample process streams
- Separate solids/liquids
- Wash solids (water and/or caustic)

- Add chemicals
- Heat waste feed
- Store intermediate products
- Monitor/control system
- Contain the waste
- Transfer waste feed
- Suspend solids
- Mix waste feed
- Containment of waste:
  - Vessel containment
  - Cell containment
- Monitoring of chilled water lines for breakthrough
- Hydrogen mitigation

Most of the functions listed above are defined in Table 1. Also given in Table 1 is a shorthand name that will be used to refer to each of the functions from this point forward in this system description.

Figures 1, 2, and 3 below show simplified operational block diagrams of the entrained solids and strontium/TRU removal system for Envelopes A, B, and C respectively. Also on Figures 1, 2, and 3 are tables to show which operating function is in use for each unit operation. The table is broken up into columns where each column immediately below a block corresponds to that block diagram. As can be seen from the tables, in many instances one unit operation applies to more than one operating function.

Table 2 relates the Operational Block Diagrams (Figures 1, 2, and 3) and their corresponding operating function tables back to the equipment shown on PFD DWG-W375PT-PR0004 (System PT-230) to show how the functions relate to the equipment shown on the PFD. The column "Corresponding Equipment" lists the major pieces of equipment that correspond to each of the operation blocks. It should be noted that the listing of a piece of equipment should be interpreted as including all of the equipment's periphery equipment and instrumentation (instruments, reverse flow diverters, fluidic mixers, breakpots etc.).

5. Normal Operations

For all envelopes, the detailed process descriptions below assume that the inlet streams to the entrained solids and strontium/TRU removal process have been concentrated in the LAW Feed Evaporator (System PT-120).

5.1. Envelope A

The concentrate from the LAW Feed Evaporator (V11002) is fed to the evaporator concentrate buffer tanks V12010A/B where the contents are sampled to check evaporator performance and to determine ultrafiltration parameters. If additional evaporation is necessary, the concentrate is recycled back to the LAW evaporator feed tanks (V11001A or V11001B). Evaporator concentrate buffer vessel V12010A can recycle back to V11001A via reverse flow diverters (RFDs) P12079A/B, while V12010B can recycle back to V11001B via RFDs P12084A/B. If no additional evaporation is required, then the solution is transferred to one of the ultrafiltration feed vessels. The evaporator concentrate vessels can transfer to either V12011A via RFDs P12077A/B and P12082A/B or V12011B via RFDs P12076A/B or P12081A/B respectively.

Note: The LAW solids removal process consists of two parallel ultrafiltration trains. One train is used for operation while the other is in a cleaning cycle. Envelope C requires that both ultrafilter trains be used at the same time. Ultrafilters are not redundant. Each is required to maintain the required pretreatment plant throughput.

The ultrafiltration re-circulation pump (P12003A or B) is first primed by filling the ultrafiltration vessel to normal operating levels, thus flooding the pump suction line. The ultrafiltration loop consisting of two parallel sets of two ultrafilters (G12003A, G12004A or G12003B, G12004B), is then set up with the permeate lines isolated. The recirculation pump is started, forcing fluid through the system. Once the correct pressure and crossflow velocity within the ultrafilters have been established in the loop, the permeate lines are opened slowly and the contents of V12011A or B are transferred through their respective ultrafiltration loops. Permeate is routed through pulse pots (V12013A/B or V12014A/B) before collecting in permeate hold vessels (V12015A/B). The solids slurry is routed through an inline double pipe cooler (E12003A or B), back to the ultrafiltration feed tank (V12011 A or B), and then pumped back through the ultrafiltration loop. The inline double pipe cooler is used to remove any heat generated by the recirculation pump. This continues until the contents in the ultrafiltration feed tank is at the desired concentrations.

The concentrated slurry in V12011A or B is then diluted with active condensate or water while continuing to operate the ultrafiltration loop. The slurry is once again concentrated, with the permeate collecting in permeate hold vessels (V12015 A or B). This dilution/re-concentration is repeated to reduce the sodium content to the required level. The wash solids permeate collected in the permeate hold vessels (V12015A/B) is recycled to the evaporator concentrate buffer vessels (V12010A/B). The wash solution is mixed with concentrated LAW feed from the evaporator so that the feed to the ultrafiltration feed vessels (V12011A/B) is at the desired sodium concentration. This is achieved by varying the molarity of the LAW feed evaporator feed. Excess wash solution can be returned to the LAW evaporator feed tanks (V11001A/B).

Note: Washing of the entrained solids only occurs when a sufficient quantity of slurry has been produced.

After the final concentration step, the contents of V12011 A or B are then transferred to the entrained solids hold vessel (V12016A/B) via Ultrafiltration Recirculation Pumps P12003A/B. After the ultrafiltration feed vessel (V12011A/B) is emptied and the remaining heel is emptied to plant wash vessel V15009, the ultrafilter is clean.

Samples are taken from the Entrained Solids Hold Vessel (V12016A/B) to ensure that the slurry meets the requirements. Prior to transferring to DST, solutions of sodium hydroxide, sodium nitrite, and/or process water are added to V12016A/B to ensure that the contents comply with the DST Waste Acceptance Criteria for the DST system.

The transfer to the DST is made by pumps P12004A/B through the same double co-axial line that feeds LAW to the pretreatment facility. The double co-axial line to DST will include a leak detection system to detect failure of the inner pipe.

Permeate collected in permeate hold vessels V12015A and V12015B is routed to the Cesium Ion Exchange (V13001) via RFD P12098, and P12103 respectively. Off specification permeate can be recycled back to either evaporation concentrate buffer vessels. V12015A can transfer to V12010A via RFD P12097 or to V12010B via RFDs P12096. The contents of V12015B can be recycled back to tank V12010B via RFD P12101 or to V12010A via RFD P12102.

5.2. Envelope B

The concentrate from the evaporator (V11002) is fed to the ultrafiltration buffer tanks V12010A/B where the contents are sampled to check evaporator performance and to determine if additional solid removal is required in order to avoid blinding the downstream ion exchange columns. If additional evaporation is necessary, the concentrate is recycled back to the LAW evaporator feed vessels (V11001A or B) via RFDs P12079A/B or P12084A/B.

During normal operations, Envelope B will bypass the LAW ultrafiltration system. Envelope B may require additional solids removal if Envelope B is over-concentrated during evaporation. Once condensed, precipitation could occur. If post precipitation occurs, additional solids removal is necessary. The sample from V12010A/B is used to specify the ultrafiltration rate required to concentrate the solution. The solution is then transferred to one of the ultrafiltration feed vessels, V12011A or B, to remove the solids. The evaporator concentrate vessels can transfer to either ultrafiltration feed vessel V12011A via RFDs P12077A/B and P12082A/B or V12011B via RFDs P12076A/B and P12081A/B. The entrained solids removal process is described in section 5.1. Permeate will be sampled in the permeate hold vessels (V12015A/B). If no additional entrained solids removal is necessary, Envelope B is routed from V12010A or B to the cesium ion exchange feed tank (V13001) via RFDs P12078A/B and P12083A/B respectively before being sent to LAW vitrification.

5.3. Envelope C

Solids removal, for Envelope C processing, follows the same operational steps as outlined for Envelopes A and B except for the following differences.

Reagents are added to the contents of V12011A or B to commence precipitation. The solution is heated using steam ejectors W12250A/B and W12251A/B to accelerate the kinetics of the reaction. The solution is then mixed by isolating the permeate line of the ultrafilter modules and running the precipitated slurry through the ultrafiltration loop. The TRU components precipitate out in the floc as hydroxide compounds. After precipitation, the solution is cooled by running the slurry through double pipe coolers (E12003A/B). The ultrafilter permeate line is closed while the cooling process is conducted to make sure no permeate (along with unprecipitated Sr/TRU) is collected. Following precipitation, the contents of V12011A or B are sampled to determine the ultrafiltration rate to achieve approximately 20 weight percent solids.

The precipitated strontium/TRU solids are concentrated and washed in the same fashion as entrained solids. All permeate accumulates in V12015A or B and the concentrated strontium/TRU solids end up in V12011A or B.

Permeate collected in permeate hold vessels (V12015 A or B) are sampled, diluted, and then routed to cesium ion exchange (V13001) via RFD P12098 and P12103 respectively. Off specification permeate can be routed back to either evaporator concentrate buffer vessels. The permeate collected from solids washing is collected within the permeate hold vessels and routed to the LAW feed evaporator feed tanks (V11001A/B).

Strontium/TRU solids in V12011A or B are routed to the strontium/TRU precipitate vessels (V12001A or C System PT-210) via pump P12003A/B. From V12001A or C, the strontium/TRU solids are blended with the de-watered Envelope D and routed to HLW vitrification.

5.4. Proposed Cleansing Schemes for the Ultrafilters

Cleansing of the ultrafilters is accomplished in one of three ways. The first consists of back pulsing the filters with permeate utilizing high-pressure air as the motive force. The second option is to wash the ultrafilter loop with nitric acid and the third option is to wash with caustic. The sections that follow describe the operations required for each of these methods. Cleaning with either acid or caustic will be carried out periodically after a completed campaign. The periodicity of back pulsing is intermittent, but occurs frequently as a normal operation of the ultrafilter loop, i.e. during a campaign.

Refer to Figure 4 for all of the options related to filter cleaning.

5.5. Fluid Transport and Fluidic Mixing

Associated with the major pieces of equipment as described in Table 2, there are also mechanical components that consist of:

- Fluidic mixers
- Reverse flow diverters (RFDs)
- Variable speed remotely maintainable pumps

5.5.1. Fluidic Mixers

Fluidic mixers are employed to mix the vessel contents, and are located in every vessel within System PT-230 except for the pulsepots (V12013A/B and V12014A/B) and breakpots (V12333A/B). In order to assure adequate mixing of the vessels containing high solids content, centrifugal pumps are also used in conjunction with the fluidic mixers to recirculate and mix the vessels. This dual system of agitation is conducted in both the ultrafiltration feed vessels and the entrained solids hold vessels. The ultrafilter feed vessels and entrained solids vessels will contain recirculation lines from pumps P12003A/B and P12004A/B respectively. The recirculation lines will be dipped to the bottom of the vessel and fitted with a nozzle to enhance mixing. The fluidic mixers used in high solids vessels operate on suction/discharge principles, and are designed to suspend high solids or high viscosity content by arranging a number of fluidic mixers within a single vessel. These types of fluidic mixers when discharged, the level in the tubes drop below the vessel level thereby displacing internal volume. The other types of fluidic mixers utilized are the suction only types. The suction type fluidic mixers are utilized in vessels that do not contain highly concentrated solids, and do not displace internal vessel volume.

5.5.2. Reverse Flow Diverters (RFDs)

RFDs have two modes of operation within System PT-230. RFDs are used for both sampling and transfer duties, and operate by using a three-phase cycle consisting of drive, vent, and refill. The average transfer rate for an RFD is approximately 70 gpm, and consumes compressed air to provide a motive force to pump. System PT-230 will use RFDs to sample the waste for every vessel except the pulsepots and breakpots. Transfer RFDs are used to transfer liquors from vessels that do not contain high viscosity or high solids contents.

6. Safety and Interlock Requirements

6.1. Normal Process Operation and Control

6.1.1. Containment of the Waste

The design of the system will minimize the risk of breach of primary containment. The following principles will be adopted:

- Vessels have level instrumentation with high alarms and trip functions to minimize the chances of overflowing. Table 3 provides instrument descriptions.
- Vessels have a designated overflow route designed to handle the largest possible flow rate into the vessels. Table 4 identifies passive overflow routing.
- Level instrumentation and overflow piping with alarm/trip set points will be used to prevent the overfilling of the vessels and subsequent liquid discharge into the vessel vent system.
- In case of an incell equipment failure, the waste will remain within the secondary containment (C5 cell) which will have an engineered route back into the process.
- Leaks will be detected via sump instrumentation and sampling of sump contents via the sample system located in the cell sump.
- Waste transfer pipeline leak detection system and transfer pumps interlock with the DST waste transfer controls and leak detection system.
- The double co-axial line to DST will also include a leak detection system to detect failure of the inner pipe. All piping from the high point near AP Tank Farm will slope back towards the RPP-WTP.

6.1.2. Leak Detection

The cell will be lined with stainless steel and level measurement will indicate leakage into the cell. Signals are routed to the central control room within the pre-treatment facility when leaks are detected. The stainless steel clad cell will be fitted with a cladding wash system for decontamination and decommissioning purposes. Cell wash down is collected in a sump, and a steam ejector is used to drain the sump to plant drain systems V15009 via breakpot V15203. The double co-axial line to and from the DST will also include a leak detection system. If a leak is detected, a trip will stop transfer.

6.1.3. Hydrogen Mitigation

The design of the system will enable hydrogen gas produced by radiolysis to be diluted to safe levels with the addition of a purge air. Purge air will be required continually to recirculate air within the vessels. The nozzle is location such that it is away from the vessel vent to enhance cross flow, but will also be located such that there is no way that it can be blocked during an overflow situation.

6.1.4. Level Control and Overflow Routing

Levels are used within System PT-230 to start/stop pump and RFD transfers between vessels. The use of level instrumentation will maintain operating levels within System-230 vessels. Level instrumentation in V12010A/B (evaporate concentrate buffer), V12011A/B (ultrafilter feed), V12015 (permeate hold), and V12016A/B (entrained solids) are also monitored to prevent over filling by stopping incoming feed transfers. A scaled alarm/trip system is used to prevent spilling. This system consists of:

i) Operational high – normal sequence
ii) High level alarm and trip – DCS to stop DCS controlled feeds to vessel
iii) High high level trip

6.1.5. Heat Management

In vessel RTDs are installed in specified vessels. The number of RTDs within each vessel will vary depending upon vessel content characteristics (i.e. high solids, high viscosity). These signals are routed to the central control room and possibly a standby control room, and are used to control the flow of chilled water and low/high pressure steam to vessel jackets and steam ejectors respectively, and to determine if adequate mixing is occurring.

The LAW wastes within the ultrafiltration feed vessels generate relatively large quantities of heat through the process of radiolytic decay. During normal operations, cooling of the solids slurry is provided by the in-line co-axial coolers E12003A/B which are serviced by chilled water. In the event that the process fluid can not be recirculated through the cooler, such as when the pump fails, the fluid will be ejected to breakpots (V12333A/B) feeding into the evaporator concentrate buffer vessels (V12010A/B) which are equipped with cooling coils serviced by chilled water.

6.1.6. Flow Monitoring

Flow instrumentation will be installed on specified waste transfer lines. Signals are routed to a central control room within the pre-treatment facility. The signal will regulate the flow on selected transfer lines through actuated valves.

6.1.7. Breakthrough Monitoring

Breakthrough monitoring will be used for equipment or vessels receiving plant services such as chilled water. The chilled water return lines used by the double pipe cooler and evaporator concentrate buffer vessel cooling coils will be monitored to ensure that a breach of primary confinement is detected and appropriate action can be taken. The monitor will alarm the operator when vessel jackets/cooling coils are breached, resulting in contamination to the plant service. Breakthrough monitoring will also be used to detect ultrafilter failure. The monitor will alarm the operator when the ulrafilters are breached, resulting in contamination to the Permeate Hold Vessel. (The filters can then be replaced.) The pulsepots are then flushed to the Permeate Hold Vessels and the undesired permeate/solid is re-routed back to the evaporator concentrate buffer vessels to be reprocessed.

6.2. Interlocks within LAW Ultrafiltration Pre-Treatment System 230

Control points shown for DWG-W375PT-PR00004, System PT-230 are defined below:

6.3. Interface Control Points

- The contents of V12010A/B are sampled to check evaporator performance and to specify the ultrafiltration rate required to concentrate to solids.

- For Envelope C processing, the contents of V12011A/B are sampled to determine the amount of precipitating reagents required.

- The contents of V12015A/B are sampled to verify that the contents meet the requirements of downstream operations (i.e., solids removal, strontium/TRU removal, and density).

- The contents of V12016A/B are sampled to verify that the contents meet the requirements for DST storage as well as verify destination of transfer.

Table 1. Operating Functions for System PT-230

Function	Shorthand Name	Definition
Receive Waste Feed	Receive	The system receives concentrated waste feed from the LAW evaporator.
Sample Process Streams	Sample	The system samples process streams to determine downstream unit operation processing parameters and to confirm quality and/or efficiency of upstream unit operation processing.
Cool Waste Feed	Cool	The system cools the waste feed from the LAW evaporator prior to ultrafiltration operations.
Heat Waste Feed	Heat	The system heats the waste feed during precipitation of strontium/TRU.
Separate Solids/Liquids	Separate	Solid/liquid separation will be performed in support of one of the primary functions of the system (remove solids).
Wash Solids	Wash	Solids washing with either process water and/or active condensate will be used to wash out interstitial sodium from the solids.
Add Chemicals	Add Chem	Chemical additions for the precipitation of strontium/TRU, process water and/or recycled active condensate for solids washing, chemical additions for cleaning, and chemical additions for the return of solids back to the DST.
Suspend Solids	Suspend	Suspend solids for transfer, and to facilitate heat transfer.
Mix Waste Feed	Mix	Mix solutions, dissolve solids, facilitate precipitation.
Store Intermediate Products	Store	This includes the lag storage requirements of unit operations during normal processing operations as well as the storage of the removed entrained solids before they are returned to the DST.
Monitor/Control System	Monitor	Instrumentation will be used to monitor the systems operation. Instrument control loops will be utilized to maintain the operation of the system and to control the system in response to an off-normal occurrence.
Contain the Waste	Contain	System equipment contains the process fluids and isolates them from the surrounding environment.
Maintain In-cell Equipment	Maintain	This includes wash rings in vessels for cleaning in-cell equipment and for decontamination/decommissioning purposes. Also includes cell wash down equipment, sump, and sump ejector.
Transfer Waste	Transfer	The system will use Reverse Flow Diverters (RFDs), and remotely maintainable pumps to transfer waste.

Table 2. Operational Functions for System PT-230 as Shown on the PFD

Operational Block	Operating Function	Response to Operating Function	Corresponding Equipment
Waste Receipt	Receive	The system receives waste feed from the LAW evaporator.	V12010A/B
	Cool	The system cools the concentrated waste feed from the LAW evaporator prior to ultrafiltration operations.	
	Sample	Sample RFD system for V12010A/B.	
	Mix	Mix solutions, and facilitate heat transfer.	
	Suspend	Suspend solids for transfer.	
	Monitor	Level, temperature, and density instruments on V12010A/B.	
	Contain	Contain the process fluids and isolates them from the surrounding environment. Breakthrough monitor for cooling coils return line.	
	Maintain	V12010A/B fitted with wash rings. Equipment installed for cell wash down. Emptying ejectors to plant wash vessel V15009.	
	Transfer	RFDs will be used for transfer purposes.	
Add Chemicals	Add Chem	Chemical reagent additions for the precipitation of strontium/TRU, process water and/or recycled active condensate for solids washing, and chemical additions for cleaning.	V12011A/B
	Add Chem	Nitric acid and/or caustic supplied to V12013A/B and V12014A/B for cleaning purposes.	V12013A/B V12014A/B
	Add Chem	Chemical additions to V12016A/B to ensure that contents meet the DST storage specifications. Also includes flush water add for transfer of V12016A/B contents to the DST.	V12016A/B

Table 2. Operational Functions for System PT-230 as Shown on the PFD

Operational Block	Operating Function	Response to Operating Function	Corresponding Equipment
Filter Feed Adjustment	Sample	Sample RFD system for V12011A/B.	V12011A/B
	Heat	The system heats the waste feed during precipitation of strontium/TRU.	
	Wash	Process water and/or active condensate added for solids washing and sodium removal.	
	Mix	Mix solutions, facilitate heat transfer, and facilitate precipitation.	
	Suspend	Suspend solids for transfer.	
	Monitor	Level, temperature, and density instruments on V12011A/B.	
	Contain	Sump level instrument and sample system for leaks into cell.	
	Maintain	V12011A/B fitted with wash rings. Equipment installed for cell wash down. Emptying ejectors installed to empty vessel when recirculation pump fails.	
	Transfer	Transfer process stream using pump P12003A/B.	
Ultrafiltration	Separate	Ultrafiltration circuit designed to remove entrained solids and Sr/TRU precipitation.	P12003A/B G12003A/B G12004A/B V12013A/B V12014A/B E12003A/B
	Wash	Filtration of solids from wash solutions.	
	Cool	The system will cool the precipitated slurry prior to concentration.	
	Monitor	Differential pressure across ultrafilters to measure ultrafilter failure and plugging. Ultrafiltration loop flow rate to measure permeate and solids flow, to detect plugging and/or breakthrough. Conductivity of ultrafiltration permeates to measure sodium concentrations for ultrafilter breakthrough. Breakthrough monitored on chilled water return line.	
	Contain	Ultrafilter module has a bottom drain which drains to a leak detection pot. Sump level instrument and sample system for leaks into cell.	

Table 2. Operational Functions for System PT-230 as Shown on the PFD

Operational Block	Operating Function	Response to Operating Function	Corresponding Equipment
Permeate Lag Storage	Sample	Sample RFD system for V12015A/B.	
	Service	Process air supplied to V12015A/B for vessel agitation.	V12015A/B
	Store	Temporary storage of ultrafilter and washed solids permeate.	
	Mix	Suspend solids for transfer, and facilitate sampling.	
	Monitor	Level, temperature, and density instruments on V12015A/B.	
	Contain	Sump level instrument and sample system for leaks into cell.	
	Maintain	V12015A/B fitted with 3 wash rings. Equipment installed for cell wash down. Emptying ejectors to plant wash vessel V15009.	
Entrained Solids Lag Storage	Sample	Sample RFD system for V12016A/B.	
	Service	Process water, process air, and low pressure steam supplied to V12016A/B	V12016A/B
	Store	Storage of entrained solids before transfer to the DST.	
	Mix	Suspend solids for transfer, facilitate sampling, and facilitate transfer reagent adjustment.	
	Monitor	Level, temperature, and density instruments on V12016A/B.	
	Contain	Sump level instrument and sample system for leaks into cell. Breakthrough monitoring for condensate return line.	
	Maintain	V12016A/B fitted with 4 wash rings. Equipment installed for cell wash down. Emptying ejector to plant wash vessel V15009.	
To DST	Monitor	Annulus leak detection instrument in return lines.	P12004A/B Transfer Line
	Contain	Double co-axial transfer line with leak detection.	
	Transfer	P12004A/B is sized for transfer back to the DST.	

Table 3. Instrument Description for HLW Feed Pre-treatment System 230

Inst. No.	Description	Control Action	Trip Actions
L120251	Level on V12010A	During normal operations V12010A level will control RFD P11003A/B from LAW evaporator and outfeed RFDs (P12076A/B, P12077A/B, P12078A/B and P12079A/B). Level will also ensure that samples are taken when there is sufficient liquid, to stop fluidic mixers during low levels, and to stop plant wash emptying ejectors.	High level will stop infeed streams from (P11003A/B), and other incoming feeds such as plant wash. Low level will stop outfeed streams (P12076A/B, P12077A/B, P12078A/B and P12079A/B)
L120261	Level on V12010B	During normal operations V12010B level will control RFD P11043A/B from LAW evaporator and outfeed RFDs (P12081A/B, P12082A/B, P12083A/B, and P12084A/B). Level will also ensure that samples are taken when there is sufficient liquid, to stop fluidic mixers during low levels, and to stop plant wash emptying ejectors.	High level will stop infeed stream from (P11043A/B), and other incoming feeds such as plant wash. Low level will stop outfeed streams (P12081A/B, P12082A/B, P12083A/B, and P12084A/B)
T120252 T120262	Temp on V12010A Temp on V12010B	Maintain temperature during normal operations by controlling chilled water to cooling coils.	High temperature reading will start chilled water flow to cooling coils. Low temperature reading will stop chilled water flow.
D120251 D120261	Density of V12010A Density of V12010B	Density used to correct level measurement.	None
T120255 T120265	Temp on V12333A Temp on V12333B	Monitor temperature in breakpots.	High temperature will stop the emptying ejectors within V12011A/B (W12280, W12281, W12282, W12283)
L120111 L120281	Level on V12011A Level on V12011B	During normal U/F operations feed tank level will control feed from V12010A/B (P12076A/B, P12077A/B, P12081A/B, and P12082A/B), and outfeed of recirculation pump (P12003A/B). During washing cycles will control the infeed process condensate. During cleaning cycles will control feed of reagents from reagent header. Level will also ensure that samples are taken when there is sufficient liquid, to stop fluidic mixers during low levels, and to stop plant wash emptying ejectors.	High level will stop infeed streams (P12076A/B, P12077A/B, P12081A/B, and P12082A/B), process condensate feed, and other incoming feeds such as plant wash, and chemical additions. Low level will stop outfeed stream (P12003A/B)
T120012 T120282	Temp on V12011A Temp on V12011B	Maintain temperature during normal operations by controlling the chilled water to E12003A/B. Control steam flow to steam heaters W12250A/B and W12251A/B during heating phase of Sr/TRU precipitation reaction. Control chilled water flow to E12003A/B during cooling phase of precipitation reaction.	High temperature reading will stop steam flow to steam heaters, initiate cooling if necessary.
D120111 D120281	Density on V12011A Density on V12011B	Density used to correct level measurement.	None
J120301 J120306	Speed of P12003A Speed of P12003B	During start-up of ultrafiltration loop used to ramp up slowly to prevent damage to ultrafilters, used to adjust pressure of first ultrafilter module. Used to adjust pressure during chemical cleaning.	Low speed will stop pumps.

Table 3. Instrument Description for HLW Feed Pre-treatment System 230

Inst. No.	Description	Control Action	Trip Actions
P120301A P120306A P120301B P120306B	Pressure at 1st filter module inlet Pressure at 2nd filter module outlet	Pressures used to calculate pressure drop across U/F modules (process side) and maintain necessary inlet pressure by adjusting recirculation pump speed.	High delta pressure alarm
F120312 F120327	Flow in U/F recirculation loop	Monitor flow in ultrafilter loops (process side)	Low flow alarm
F120305 F120300 F120320 F120315	Flowrates in permeate lines exiting pulsepots	Monitor permeate flow through each ultrafilter module (permeate side) – used to troubleshoot filters if necessary	High flow alarm, Low flow alarm built into sequence.
C120302 C120317	Conductivity of permeate	Monitor conductivity as a measure of sodium concentration – used to determine endpoint of solids wash stage.	None
L120331 L120341	Level of V12015A Level of V12015B	Measure level in permeate collection tanks Level will also ensure that samples are taken when there is sufficient liquid, to stop fluidic mixers during low levels, and to stop plant wash emptying ejectors.	High level stops P12003A/B and other incoming feeds such as plant wash. Low level stops discharge RFDs.
T120332 T120342	Temp of V12015A Temp of V12015B	Temperature profile of vessel.	None
D120331 D120341	Density of V12015A Density of V12015B	Density of permeate.	None
L120361 L120371	Level on V12016A Level on V12016B	Level measurement will control the flow of the input streams (entrained solids) from P12003A/B, and the flow of output streams to DST (P12004A/B). Level will also ensure that samples are taken when there is sufficient liquid, to stop fluidic mixers during low levels, and to stop plant wash emptying ejectors.	High level will stop input stream transfer pumps P12003A/B, and other incoming feeds such as plant wash, and chemical additions. Low level will stop output stream transfer pumps P12004A/B
T120362 T120372	Temp on V12016A Temp on V12016B	Measurement	None
D120361 D120371	Density on V12016A Density on V12016B	Measurement	None
	Leak Detection	Co-axial pipe will have leak detection instrumentation	Stop all transfers.

Table 4. Passive Overflow Routing

Vessel	Overflow Route
Evaporator Concentrate Buffer - V12010A	V15009
Evaporator Concentrate Buffer - V12010B	V15009
Ultrafiltration Feed Vessel - V12011A	V15009
Ultrafiltration Feed Vessel - V12011B	V15009
Permeate Hold Vessel - V12015A	V15009
Permeate Hold Vessel - V12015B	V15009
Entrained Solids Hold Vessel - V12016A	V12002
Entrained Solids Hold Vessel - V12016B	V12002

Figure 1. Normal Operational Block Diagram – Envelope A

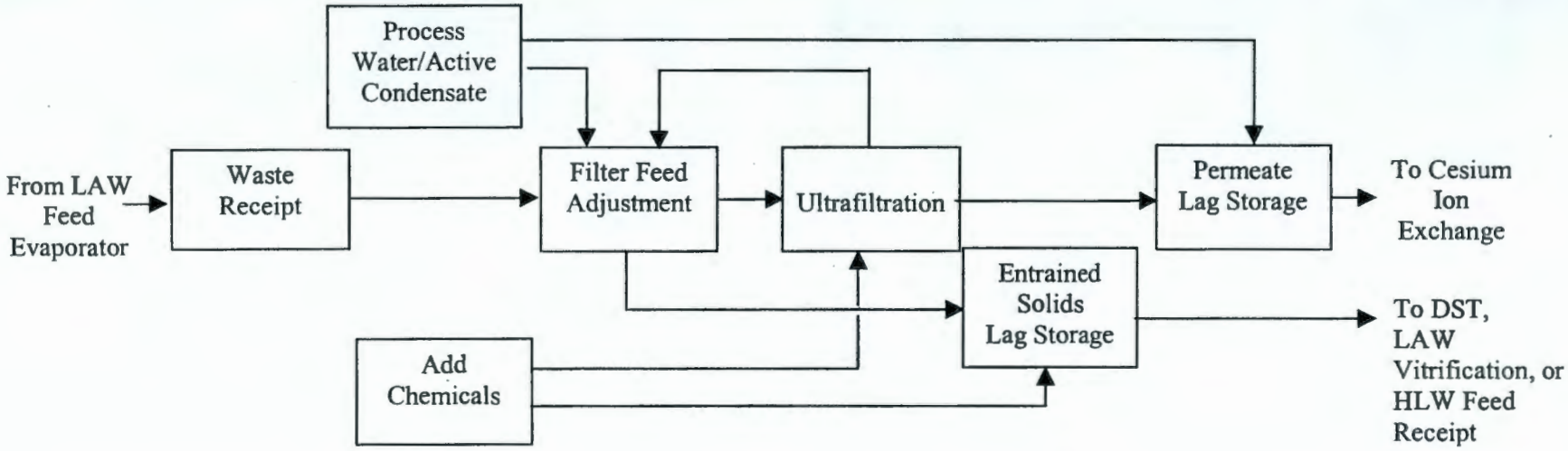

Normal Operating Function

Receive						
Cool			Cool			
Sample		Sample		Sample	Sample	
			Separate			
		Wash	Wash			
	Add Chem					
Mix		Mix		Mix	Mix	
Suspend		Suspend		Store	Store	
Monitor		Monitor	Monitor	Monitor	Monitor	Monitor
Contain		Contain	Contain	Contain	Contain	Contain
Maintain		Maintain		Maintain	Maintain	
Transfer		Transfer		Transfer	Transfer	

Figure 2. Normal Operational Block Diagram – Envelope B

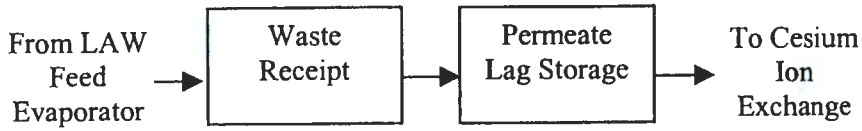

Receive	
Cool	
Sample	Sample
Mix	Mix
Suspend	Store
Monitor	Monitor
Contain	Contain
Maintain	Maintain
Transfer	Transfer

Figure 3. Normal Operational Block Diagram – Envelope C

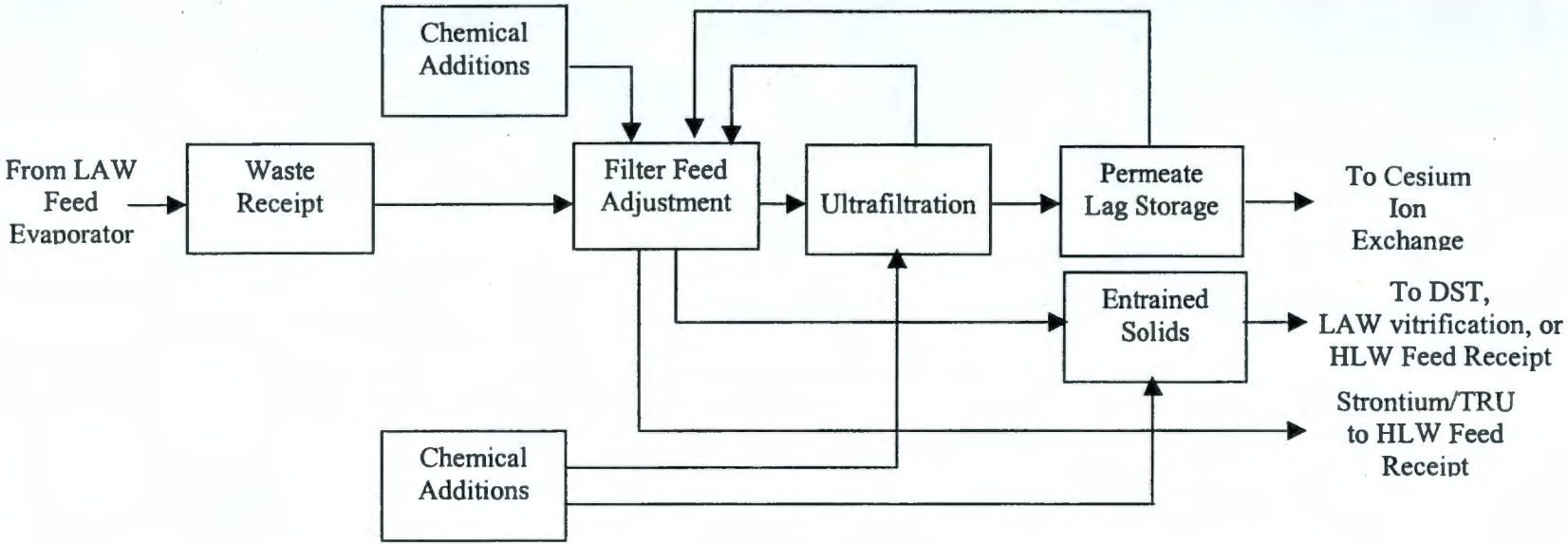

Normal Operating Function

Receive					
Cool			Cool		
Sample		Sample		Sample	
		Heat	Separate		
		Wash	Wash		
	Chem Add				
Mix		Mix		Mix	
Suspend		Suspend		Store	
Monitor		Monitor	Monitor	Monitor	Monitor
Contain		Contain	Contain	Contain	Contain
Maintain		Maintain		Maintain	
Transfer		Transfer		Transfer	

Figure 4. Crossflow filter showing backwash system

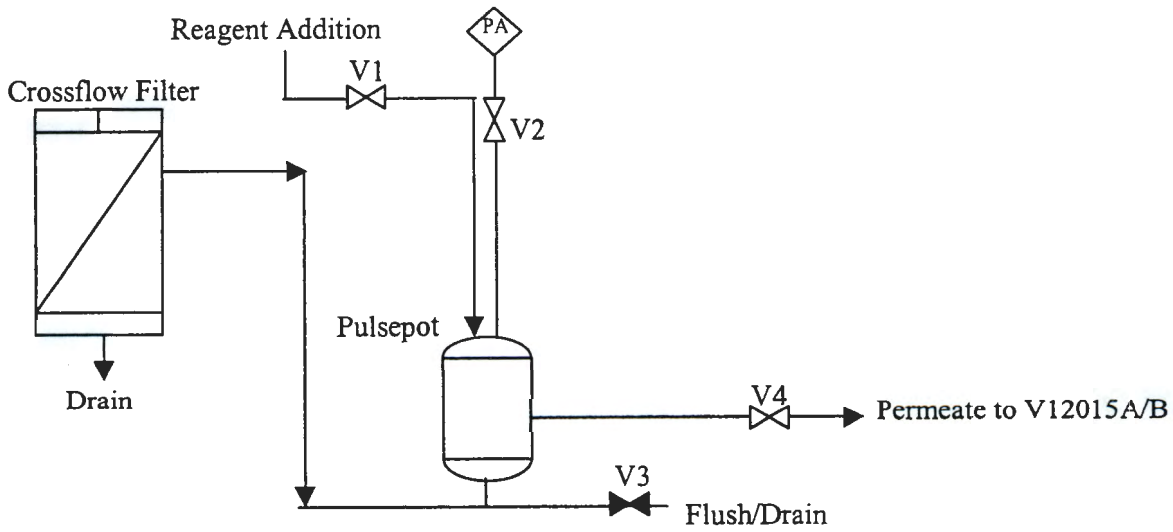

PT System 310: Cesium Removal Using Ion Exchange

1. Introduction and Scope

For this System Description refer to drawing number DWG-375PT-PR00005, *Process Flow Diagram, Cesium Removal Using Ion Exchange.*

Cesium removal is accomplished by passing the LAW feed through an ion exchange system with an ion exchange medium. The cesium ion exchange system has two sets of two columns operating in parallel. One set of columns operates in the loading cycle while the other set is eluted and regenerated or having its spent resin replaced. An additional column is used as a polishing column to ensure removal of cesium to the level required. The polishing column is always connected in series downstream of the lead and lag column pair. After loading, the loaded resin is fully eluted, and the eluate, containing the cesium, is concentrated in the cesium nitric acid recovery system and ultimately processed in the high level waste (HLW) melter. Downstream of the Cs-IX system, technetium is removed from the LAW liquor in the Tc-IX system, the LAW liquor is concentrated by evaporation in the LAW Melter Feed Evaporator system, and finally the LAW is blended before being converted to glass by the LAW vitrification process.

2. System Description

The cesium ion exchange system selected for the removal of cesium from LAW utilizes four main ion exchange columns and a final (polishing) ion exchange column. The four columns operate as two parallel sets of two columns. The two parallel sets are arranged as a series of two columns, one as the lead and the other following it as the lag column. The order of the columns in each set may be switched, so that the lead column becomes the lag and the lag becomes the lead. At any given time, only one set of columns is in the loading cycle, removing cesium from the LAW feed; the other set is being regenerated or having its spent resin replaced. After a lead column is regenerated, it becomes the lag column in the next loading cycle. The final column or polishing column is in series with, and located downstream of, the two columns in the loading mode. When the polishing column needs to be regenerated, loading is suspended for both sets of columns.

The ion exchange system is in-cell and includes the following operations: removal of cesium ions from LAW by ion exchange, regeneration of ion exchange resin beds by chemical additions and rinse steps, and replacement of spent resin with fresh resin. Figure 1 shows the simplified flow scheme for the ion exchange system.

The cesium removal step results in loading of resin beds with cesium ions. When the cesium concentration in effluent of the lead column reaches approximately 50% of that of the cesium concentration in the feed entering the lead column, or if any significant amount of cesium is detected in the effluent of the lag column, or in the effluent of the polishing column, the loading operation is switched to the second set of columns. The loaded lead column is then eluted. If cesium is detected in the effluent from the polishing column, all three columns in the loading mode are eluted. Elution is part of a resin bed regeneration cycle that includes the following sub-steps:

1. Displacement of residual LAW feed in the column by rinsing with dilute caustic solution to prevent the potential of precipitating aluminum hydroxide

2. Displacement of residual dilute caustic solution from the column with demineralized water (DMW) to prevent an acid-base reaction

3 Elution of cesium ions with dilute nitric acid

4 Displacement of residual acid from the column with DMW to prevent an acid-base reaction

5 Regeneration of the resin with caustic solution

After a number of loading and regeneration cycles the resin is expected to lose performance and is termed "spent". The spent resin is slurried with recycled resin flush solution and flushed out of the column into PT System 370 for resin disposal. A slurry of fresh resin prepared in PT System 360 is then added to the column as a bed replacement.

Two pumps are used to load and to elute the columns, feeding reagents, water or LAW to the columns. One pump is normally dedicated to one set of a pair of columns and the other pump is normally dedicated to the other set of a pair of columns. Spent resin is removed with pumped resin flush liquor. Fresh resin is slurried into the columns by gravity feed.

The main process components of the cesium ion exchange system are as follows:

1 LAW Feed and Reagent Pumps (P13004A & P13004B)

2 Five ion exchange columns (identical in dimensions) for cesium removal (C13001, C13002, C13003, C13004, C13011)

3 LAW Feed Vessel (V13001)

4 Treated LAW Collection Vessel (V13004)

5 Treated LAW Transfer Pumps (P13005A & P13005B)

Other equipment includes two vessels (V13007/8) for receiving and transferring caustic rinse, with transfer reverse flow diverters (RFDs); the in-cell Cs Reagent Vessel (V13022) for the supply of demineralized water (DMW) and caustic solutions, as well as the supply of standby reagents (nitric acid, DMW, and caustic solution) for emergency elution.

3. Functions

The primary functions of the system are described as follows:

- Remove cesium from the LAW permeate received from the LAW Ultrafiltration System.
- Prepare the captured cesium for subsequent concentration, storage, and feed to the HLW melter system.

The operating functions are those that are necessary to accomplish the primary function. These functions are identified and described as follows:

- Receive LAW permeate feed from the ultrafiltration system and deliver it to ion exchange columns.
- Collect treated LAW and transfer it to the technetium ion exchange system.

- Recycle out-of-specification treated LAW back through the cesium removal system.
- Add chemicals and demineralized and/or process water for column rinse, elution, and regeneration processes.
- Use services for reagent make-up, column rinse, and component operation.
- Potentially recover used caustic streams for re-use.
- Remove cesium from loaded column beds (by elution) to the degree necessary to ensure successful loading during the next use of the column.
- Regenerate the resin bed to ensure successful ion exchange in the next loading step.
- Remove spent resin and replace with fresh resin.
- Decontaminate vessels using internal wash rings.
- Provide distributed control system (DCS) control.
- Provide overfill protection with level controls, alarms, trips, and overflow piping.

Safety-related functions support the primary functions are as follows:

- Detect loss of containment by a vessel – liquid leakage into the cell from a vessel is detected by sump level instrumentation. (The sump is included in system PT-550).
- Prevent backflow of radioactive material into inactive feed lines – isolation valves for process lines and loop seals for plant wash lines. Supply lines are vented in plant reagent/wash cabinets.
- Provide monitoring of column temperature – temperature of each resin bed is continuously monitored. While LAW is being treated, chilled water flows through water jackets fitted on each ion exchange column.
- Check chilled water flow – chilled water return lines are monitored for flow.
- Monitor for potential leakage of LAW into chilled water column jackets – chilled water return lines are monitored for contamination.
- Pressure relief for ion exchange columns – a piping header connected to the vented Cs Reagent Vessel (which overflows to the LAW feed vessel) is connected to each column.

A standby elution system is provided by a three tanks, one containing nitric acid (T116002), another which contains DMW, and the third which contains sodium hydroxide, each in volume sufficient to fully elute one fully loaded column. The tanks are located at an elevation sufficiently high above the Cs-IX columns to provide enough head to flow through the reagent vessel V13022, pumps (P13004A or B), one of the Cs-IX columns and associated piping to the final destination in one of the eluate vessels V13024A or B. The emergency elution head tank provides sufficient head to deliver a batch of eluant of at least 15 bed volumes within a period of approximately 30 hours.

Another safety related function is the use of purge air for certain vessels in order to maintain hydrogen concentrations below the lower flammable limit. Purge air is used to keep the hydrogen concentration below the lower flammable limit in the LAW Feed Vessel (V13001). V13001 can contain appreciable amounts of Cs. Moreover, purge air is used to keep the hydrogen concentration below hydrogen's lower flammable limit in the Treated LAW Collection Vessel (V13004), which could contain off-specification treated LAW.

Operational activities are shown in Table 1. Table 2 summarizes the relationship between the safety-related or non-safety-related functions of this system and the process equipment designed to perform those functions. Additionally, internal decontamination of vessels may at times be required. Wash systems have the ability to introduce water, caustic and acid. Also, the stainless steel clad cell is fitted with a cladding wash system for walls and floor decontamination purposes. In-cell process equipment is designed to operate without maintenance for the life of the facility, and overflow routes have been provided for containment.

Overflow routings are shown in Table 3, and functional requirements of each major instrument in the system are shown in Table 4.

4. Normal Operations

During loading, regeneration and spent resin removal, the discharge pressure from the LAW Feed and Reagent Pump or the Resin Flush Pump exerts pressure on the IX column, and the column's vent valve is closed. Each IX column is protected from over-pressurization by a pressure safety valve. When the lag columns are idle, the vent valve of each is open, otherwise the hydrogen and oxygen gases generated by radiolytic action are continuously swept from the column along with the flowing liquid.

For initial startup, air is displaced from the IX columns by filling the columns with DMW from the Cs Reagent Vessel with the vent valve on the IX columns in the open position. Then, fresh resin is added to each column.

4.1. Loading Cycle

LAW feed to the cesium ion exchange system from the LAW Feed Vessel (V13001) flows **down** through the IX column. The actual sodium concentration is controlled such that the LAW specific gravity does not exceed the specific gravity of the wetted resin in order to prevent the resin from floating. The temperature of the LAW feed to the ion exchange columns should not exceed a temperature of approximately 77°F in order to ensure the operational efficiency of the ion exchange system. Chilled water temperature is used to cool the column.

One pair of ion exchange columns is in the loading cycle while the lead column of the other pair is in the elution/regeneration mode. The set of ion exchange columns in the loading cycle (e.g., C13001 and C13002 along with the polishing column, C13011) receives a LAW feed that has had entrained solids removed. With the exception of the polishing column, which is always in the third or last position, either column of a pair can act as the lead column, as they are identical and completely interchangeable. In other words, the positions of C13001 and C13002 are interchangeable and the positions of C13003 and C13004 are interchangeable.

In the loading cycle, LAW from V13001 is pumped at a controlled rate **down** through the lead column of the set. The pump head is also sufficient to push LAW **down** through the lag column and polishing column before being transported to the Treated LAW Collection Vessel (V13004). If cesium has not

been sufficiently removed to allow the process LAW to meet product targets and ILAW limitations, the LAW can be recycled back to the LAW feed vessel via P13005 A or B. Otherwise, P13005A/B forwards the treated LAW from vessel V13004 to the technetium ion exchange system for additional radionuclide removal. The normal resin bed volume for a cesium ion exchange column is approximately 277 gallons. Each column is designed to hold this volume of wetted resin plus 50% additional resin.

The concentration of cesium in the treated LAW is monitored between the lead and lag columns and between the lag and polishing column as well as on the inlet line to the Treated LAW Collection Vessel (V13004). If approximately 50% breakthrough from the lead column is detected or if significant cesium breakthrough is detected in the effluent from the lag columns, the cycle in the set of columns being loaded is suspended. The LAW feed is then transferred to the second pair of ion exchange columns (for instance, C13003 and C13004) and the loaded lead column will undergo regeneration.

Occasionally, the polishing column (C13011) will need to be regenerated based on analysis of the treated LAW in V13004. At that time, all three loading columns are regenerated (one at a time), and loading is suspended for all five columns.

4.2. Fluid Displacement and Pre-Elution Rinse

4.2.1. Fluid Displacement

Residual feed, remaining in the lead column after loading is suspended, is displaced **down** through the column with caustic solution. This solution may be made up in caustic vessel V13008 and is transferred by RFDs P13001A/B to the Cs Reagent Vessel (V13022) above the ion exchange columns. Alternatively, the caustic solution may be fed into V13022 via an integrating flow meter located out-cell.

Caustic solution displaces LAW feed, which flows **down** through the lead column to the lag column. LAW solution is in turn displaced from the lag column to V13004. Caustic does not affect the cesium loading on the resin and prevents aluminum hydroxide precipitation (any fluids discharged to the lag column are incorporated into treated LAW).

4.2.2. Pre-Elution Rinse

Residual caustic is displaced from the column by DMW which flows **down** through the column from the LAW feed pump (P13001 A or B) via the Cs Reagent Vessel (V13022). The DMW is supplied to the Cs Reagent Vessel from a head tank located out-cell at some elevation above. A batch of DMW is meter in though the use of a integrating flow meter located in the line between the DMW head tank and the Cs Reagent Vessel.

Caustic must be displaced from the column in order to prevent an exothermic acid-base reaction from occurring with the nitric acid used for column elution. The solution displaced from the column is discharged to the Caustic Rinse Collection Vessel (V13008) for recycling at the *LAW Feed Evaporator System* (via vessel V15013 in the *Pretreatment Effluent Collection System*).

4.3. Column Elution

Cesium is eluted (removed) from the loaded resin bed by the **upflow** of nitric acid. Cesium eluant vessels V13027A/B supply nitric acid via P13004A or B to the ion exchange columns. The concentration of cesium in the acid eluate is monitored in the effluent from all columns. Elution is continued until only limited concentrations of cesium are detected in the eluate leaving the column. The nitric acid eluate is sent to the cesium eluate receipt vessels (V13024A/B) for further processing to recover the concentrated

cesium product. The nitric acid is also recovered in the *Cesium Nitric Acid Recovery* system for reuse as eluant.

The cesium nitric acid recovery system has provision for the routine receipt of batches of fresh make-up acid entering the Cesium Eluant Vessels (V13027A/B) to restore the acid's concentration if necessary. Excess eluant in the batches is recycled to the feed evaporator system (via V13022 and an IX column, which provides the pathway to the manifold for V13008). From the manifold of V13008, fluids can be transferred to the *Feed Evaporator System* via the *Pretreatment Effluent Collection System*. After excess eluant flows through an IX column, the column is rinsed with DMW and regenerated.

4.4. Post Elution Rinse

Residual nitric acid is displaced from the column by the **upflow** of demineralized water, supplied by the Cs Reagent Vessel (V13022). Nitric acid must be flushed from the column prior to regeneration. The solution displaced from the column may contain appreciable amounts of cesium. The first BV of displaced solution is added to eluate receipt vessels V13024A/B. Depending upon the second BV's acidity (measured in V13024A/B from the previous elution), the second BV of displaced solution is routed to the vessel V13008 manifold or to the eluate receipt vessels, V13024A/B.

4.5. Column Regeneration

An ion exchange bed is regenerated (converted to the sodium form ready for reloading) with the **down** flow of caustic solution. The solution is supplied from outcell to the Cs Reagent Vessel (V13022), which delivers it through the column to either the lag column or to the Caustic Rinse Collection Vessel (V13008) for reuse in the column fluid displacement cycle. The column is now ready for reloading.

On occasions when the polishing column (C13011) is regenerated, caustic flows from the column to V13008. The polishing column (C13011) remains permanently in the trailing position.

The newly regenerated ion exchange column is used as the lag column in the next loading cycle and the column that was previously the lag column (and has not been regenerated) is used as the lead.

5. Safety and Interlock Requirements

The following list provides a preliminary overview of the interlock features.

- Overfilling – all vessels are protected against overfilling by liquid level indication, and high level instrumentation interlocks to shut off all feed sources, as required. Overflow piping from each vented vessel prevents liquid from entering the vent system (see Table 3).

- Overheating – temperature regulation is provided to the ion exchange columns by a chilled water supply that operates continuously. Temperature indication is provided on each ion exchange column, and all chilled water return lines will be monitored for flow.

- Leakage of process liquids into chilled water – chilled water return lines will be monitored for contamination.

- Overpressurization – pressure relief for each ion exchange column is provided by a relief valve that discharges to a piping header that is vented via a vented breakpot that overflows to the LAW Feed Vessel, V13001.

- Loss of containment – all vessels are protected against containment loss by liquid level indication, low-level interlocks to shut off all feed sources, and DCS control and alarm functions, as required. The cell, which drains to a sump, contains any liquid leakage in this system. The cell is lined with stainless steel, and sump level instrumentation detects any liquid leakage into the cell.

- Inadvertent transfers of fluids – all system sequential operations are properly interlocked to prevent inadvertent transfers at the wrong time or location.

- RFD failure – where needed, system vessels using RFDs incorporate dual RFD system redundancy into the design to prevent loss of process function and to maintain appropriate liquid levels in vessels if one of the RFDs should fail.

- Column Venting – the LAW and reagent valves for each IX column are interlocked with the column vent valve so that the vent valve closes when the LAW feed valve or reagent feed valves open to the IX column. Similarly, the vent valve is closed during spent resin removal. The LAW feed valve for each IX column is interlocked with its vent valve so that the vent valve opens when the valves close to end either the IX column's loading cycle or spent resin removal cycle.

- LAW Feed Vessel (V13001) and Treated LAW Collection Vessel (V13004) Air Purges– purge air continuously flows through the head space of V13001 and V13004 to keep H_2 levels below 25% of hydrogen's lower flammable limit.

Table 1. Operational Activities

Operational Activity	Definition
Contain	Process equipment is monitored for failure or leakage
Load	Load the resin by passing LAW [a] through ion exchange columns
Monitor	Instrumentation, online analysis, monitor and control the operations
Elute/regenerate	Regenerate a lead column with a cycle of rinses, acid elution, and caustic addition steps
Remove/replace	After a number of regenerations, resin becomes spent and is removed by slurrying out and replaced by fresh resin that is slurried into a column

[a] LAW = low-activity waste

Table 2. Safety and Non-Safety Related Functions of the *Cesium Removal Using Ion Exchange* System

Function	Activity	Description of Function	Equipment
Receive LAW permeate feed from ultrafiltration system and deliver to ion exchange columns.	Load	Columns are pump-fed LAW.[a]	LAW Feed Vessel, V13001, and LAW Feed Pumps, P13004A & P13004B
	Monitor	Feed vessel is protected from overfilling by level instrumentation with DCS [b] control and alarms as required.	
	Contain	Leakage into the cell is detected by liquid level instrumentation in the cell sump, with DCS control and alarms as required. Process equipment is designed without maintenance for the life of the plant. Overflow routes from vessels provide containment during overfill events.	
Remove Cs from LAW feed	Load	Remove cesium from LAW feed.	Cesium Ion Exchange Columns C13001/2/3/4 & C13011
	Contain	Leakage into cell is detected by level instrumentation in the cell sump with DCS control and alarms as required. Process equipment is designed without maintenance for the life of the plant.	
	Monitor	Temperature regulation is provided by chilled water fed through water jackets on each ion exchange column.	
	Monitor	Online gamma activity monitoring detects Cs-137 breakthrough conditions.	
	Monitor	Chilled water return lines are monitored for flow and contamination.	
	Monitor	High column pressure and high or low resin bed pressure drop are alarmed.	
Collect treated LAW and transfer to Tc ion exchange system or recycle out-of-specification treated LAW to LAW feed vessel as determined by sample system/gamma monitor	Monitor	Vessel is protected from overfilling by liquid level instrumentation, with DCS control and alarms as required.	Treated LAW Collection Vessel V13004
	Contain	Leakage into cell is detected by level instrumentation in the cell sump with DCS control and alarms as required. Process equipment is designed without maintenance for the life of the plant. Overflow routes from vessels provide containment during overfill events.	

Table 2. Safety and Non-Safety Related Functions of the *Cesium Removal Using Ion Exchange* System

Function	Activity	Description of Function	Equipment
Add chemicals for column fluid displacement, elution, and regeneration processes	Elute/ regenerate	Regeneration cycle, including rinses.	Cs IX Columns (C13001/2/3/4 & C13011), Cs Reagent Vessel (V13022), Caustic Rinse Vessel (V13007), Caustic Rinse Collection Vessel (V13008), LAW feed and reagent pumps (P13004A/B)
	Contain	Leakage into the cell is detected by liquid level instrumentation in the cell sump, with DCS control and alarms as required. Process equipment is designed without maintenance for the life of the plant. Overflow routes from vessels provide containment during overfill events.	
	Monitor	Cesium concentration in eluate is monitored to determine when elution is complete.	
Recover regeneration caustic for reuse (optional task)	Elute/ regenerate	Caustic and rinse water discharged from a column may be recovered for re-use.	Caustic Vessels V13007 V13008
	Monitor	Vessels are protected from overfilling by liquid level instrumentation, with DCS control and alarms as required.	
	Contain	Leakage into the cell is detected by liquid level instrumentation in the cell sump, with DCS control and alarms as required. Process equipment is designed without maintenance for the life of the plant. Overflow routes from vessels provide containment during overfill events.	
Transfer eluate rinse to *Cesium Nitric Acid Recovery* system	Elute/ regenerate	Feed nitric acid eluant from V13027A/B to the column and discharge eluate from column to V13024A/B.	V13027A/B, P13004A/B and V13024A/B
	Contain	Leakage into the cell is detected by liquid level instrumentation in the cell sump, with DCS control and alarms as required. Process equipment is designed without maintenance for the life of the plant.	
Spent resin removal and fresh resin addition	Remove/ replace	Remove spent resin from a column as a slurry, and add fresh resin as a slurry (operational measures ensure replacement of resins before excessive degradation occurs).	Cesium Ion Exchange Columns, (C13001/2/3/4 & C13011), Fresh Resin Vessel (V13125), Resin Flush Transfer Pumps (P43064A/B) and Spent Resin Vessels (V13135A and V13136)
	Contain	Leakage into the cell is detected by liquid level instrumentation in the cell sump, with DCS control and alarms as required.	

[a] LAW = low-activity waste
[b] DCS = distributed control system
[c] RFD = reverse flow diverter

Table 3. Overflow Routes for Cesium IX Vessel System

Overflowing Vessel	Receiving Vessel
LAW Feed Vessel, V13001	Permeate Law Feed Vessel, V12015A
Treated LAW Collection Vessel, V13004	LAW Feed Vessel, V13001
Caustic Rinse Vessel, V13007	Caustic Rinse Collection Vessel, V13008
Caustic Rinse Collection Vessel, V13008	Plant Wash Vessel (V15009)
Cs Reagent Vessel (V13022)	Plant Wash Vessel (V15013)

Table 4. Instrument Description for the Cesium IX System

Instrument	Description	Control Action	Trip Actions
L131002	Measures Level in V13004	Flow of LAW into and from V13004.	High level in V13004 trips off LAW Feed Pump (P13004A or P13004B). Low level in V13004 trips off Treated LAW Pumps (P13005A & P13005B) as well as the Plant Wash Ejector, W13002.
L131001	Measures Level in V13001	Flow of LAW into and from V13001.	High level in V13001 trips off the Permeate Feed RFDs (P12098 & P12103). Low level in V13001 trips off LAW Feed Pumps (P13004A & P13004B) and Plant Wash Ejector, W13001.
L131019	Measures Level in V13022	Level in V13022.	High level in V13022 trips off reagent infeeds from out-cell reagent tanks (T16102, T16106, T16002) as well as DMW to V13022 and V13008 caustic RFD (P13001A/B). Low level in V13022 trips P13004A/B
T131201/2/3/4 and T131207	Measures temperature in the resin bed for the IX column (C13001/2/3/4 & C13011)	Flow of caustic, DMW and nitric acid from Cs Reagent Vessel (V13022). Alarms on high temperature in IX columns.	High high temperature initiates purge sequence of Cs from IX columns with caustic, DMW and nitric acid, respectively.
P131101 and P131118	Measures pressure upstream of C13001/2/3/4 & C13011	Pressure into cesium columns. Alarms on high and low pressures downstream of P13004A or P13004B.	High high pressure initiates shut down of LAW Feed Pump (P13004A or B). Low low pressure initiates shut down of LAW Feed Pump (P13004A or B).
P131102 and P131117	Measures pressure upstream of C13005/6/7/8	Pressure into technetium columns. Alarms on high and low pressures downstream of P13005A or P13005B.	High high pressure initiates shut down of LAW Collection Feed Pump (P13005A or B). Low low pressure initiates shut down of P13005A or B.
P131103 and P131104	Measures pressure downstream of lead column and upstream of lag and polishing column. At any given time the lag column could be C13001/2/3 or 4. Also measures pressure downstream of column being eluted.	Pressure into lag column or pressure downstream of eluting column. Alarms high and low pressures downstream of lead or eluting columns.	High high pressure initiates shut down of LAW Feed Pump (P13004 A or B). Low low pressure initiates shut down of P13004 A or B.

Table 4. Instrument Description for the Cesium IX System

Instrument	Description	Control Action	Trip Actions
F131150 and F131153	Signal from flow controller resets speed controller at P13004 A or B which is taking suction from: V13001 for LAW V13022 for reagents V13027A/B for eluant	Flow rate of LAW. Alarms on high and low flows downstream of P13004 A or B.	High high flow initiates shut down of LAW and Reagent Feed Pump (P13004 A or B). Low low flow initiates shut down of P13004 A or B.
F131151 and F131152	Signal from flow controller resets speed controller at pump (P13005 A or B)	Flow rate of LAW. Alarms on high and low flows downstream of P13005 A or B.	High high flow initiates shut down of Treated LAW Pump (P13005 A or B). Low low flow initiates shut down of P13005 A or B.
P131103/4	Measures pressure between a pair of IX columns	Pressure from columns. Alarms to control room on high and low pressures.	High high or Low low pressure initiates shut down of LAW Feed Pump (P13004 A or B).
L131004	Measures level in V13007	Flow from V13007.	Low level shuts down transfer RFD (P13002A/B) and Plant Washing Ejector, W13004. High level shuts down the caustic feed to the Reagent Vessel (V13022).
L131003	Measures level in V13008	Flow from V13008.	Low level shuts down transfer RFDs (P13001A/B and P13003 for caustic) as well as the Plant Washing Ejector, W13005. High level shuts down caustic feed to the Cs Reagent Vessel (V13022).
D131003	Measures liquid density in V13008	Indicates caustic strength.	None.
R131251	During loading measures cesium concentration in effluent from lead IX column, C13001 or C13002. During elution measures Cs concentration in effluent from eluting column.	During loading signals cesium breakthrough. Alarms on high Cs reading. During elution signals end of elution. Alarms on high Cs reading if the inventory of eluant is depleted.	During loading high high reading shuts down P13004 A or B. None during elution.
R131252	During loading measures cesium concentration in effluent from lead IX column, C13003 or C13004. During elution measures Cs concentration in effluent from eluting column.	During loading signals cesium breakthrough. Alarms on high Cs reading. During elution signals end of elution. Alarms on high Cs reading if the inventory of eluant is depleted.	During loading high high reading shuts down P13004 A or B. None during elution.
R131250	Measures cesium concentration in effluent from the polishing column, C13011	Measures cesium concentration. Alarms on high Cs reading.	High high reading shuts down P13004A/B and P13005A/B.

Table 4. Instrument Description for the Cesium IX System

Instrument	Description	Control Action	Trip Actions
R131259	Measures cesium concentration upstream of the polishing column C13011	Measures cesium concentration. Alarms on high Cs reading.	High high reading shuts down P13004A/B and P13005A/B.
R131254	Measures cesium concentration in the spent resin slurry as it is being discharged from a column (C13001/2/3/4 or C13011.	Measures cesium concentration. Alarms on high Cs reading.	High reading shuts down the Resin Flush Transfer Pump (P13064 A or B)
R131255	Measures cesium concentration in the Fresh Resin Transport Liquor as it is being discharged from a column (C13001/2/3/4 or C13011.	Measures cesium concentration. Alarms on high Cs reading.	High reading closes valves within the Fresh Resin Addition System, stopping further addition of fresh resin.

Figure 1. Simplified Flow Schematic for Cs Ion Exchange System

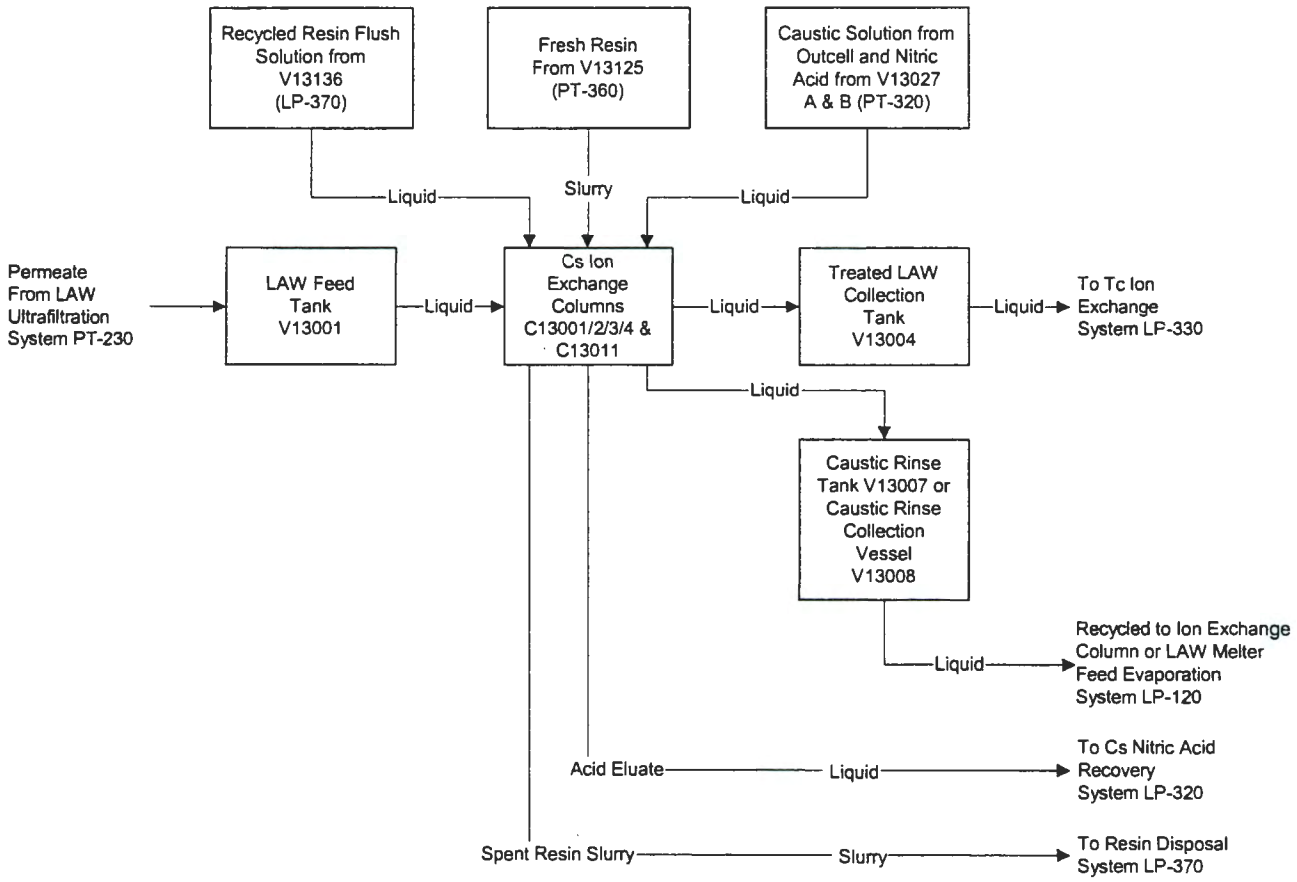

PT System 320: Cesium Nitric Acid Recovery

1. Introduction and Scope

The purpose of this system is to reduce the volume of the cesium eluate stream from the ion exchange process, thereby producing a cesium concentrate, and to recover as much nitric acid as possible from this stream for reuse.

The eluate from the cesium ion exchange columns is sent through an evaporative process to recover nitric acid and concentrate the eluate solution. The recovered nitric acid is reused in the process to elute the cesium ion exchange columns. The recovered cesium concentrate is transferred to storage vessel V13073, which also collects recovered technetium concentrate, prior to transfer to HLW vitrification.

2. Applicable Documents

Refer to drawing number DWG-W375PT-PR00009, *Process Flow Diagram, Cesium Nitric Acid Recovery* for System PT-320.

3. System Description

The elution stream exiting from an ion exchange column is termed "eluate" and the stream feeding an ion exchange column for elution is termed "eluant."

Nitric acid eluate, containing cesium nitrate and other nitrate salts (e.g., sodium and potassium) from the ion exchange columns, is collected and fed to a steam-jacketed evaporator kettle via a pulse pot. Before the eluate is fed, the kettle is "charged" with nitric acid. The "charge" is then heated to a predetermined temperature and the required process vacuum conditions are established before feeding of eluate begins. The concentration of the acid charge, the temperature and the vacuum are chosen to produce a vapor in the evaporator overhead of equal molarity as the inlet stream, leaving the salts, that are in the eluate, to accumulate in the kettle. The resulting concentrated nitric acid/cesium liquor is transferred from the evaporator to the Cesium and Technetium Concentrate Storage Vessel V13073, where it is stored prior to feeding to the HLW melter system.

Acid and water vapors pass through a mist eliminator, permanently mounted near the top of the evaporator kettle, and then to a refluxed rectifier column where the nitric acid is condensed. This nitric acid stream is separated and recovered for reuse as eluant. Water vapor from the top of the rectifier column is condensed, while still under vacuum, in the primary shell-and-tube heat exchanger with cooling water. A second heat exchanger, the aftercondenser, condenses the steam from the steam ejectors and uncondensed vapor from the primary condenser. Process condensate from the two condensers is transferred to the Pretreatment Effluent Collection system. Non-condensable vapors and gases from the aftercondenser are vented. (See Figure 1.)

4. Functions

4.1. Primary Functions

The primary functions of the *Cesium Nitric Acid Recovery* system are described as follows:

- Recover nitric acid from the cesium eluate, for reuse as eluant.
- Concentrate and store eluted cesium for eventual incorporation in the HLW melter feed.

The secondary functions of the *Cesium Nitric Acid Recovery* system are those that are required to support the primary function. These functions are identified and described as follows:

- Receive cesium eluate from the cesium ion exchange system and deliver it to the evaporator kettle at a controlled rate.

- Recover nitric acid and water vapor from the evaporator overhead and transfer it to the rectifier column.

- Recover cesium concentrate from the evaporator bottoms and transfer it to the Cesium and Technetium Concentrate Storage Vessel V13073.

- Recover water vapor from the rectifier column, via a two-stage vacuum ejector/condenser system, and collect the process condensate product in a pot for eventual transfer to the Pretreatment Effluent Collection system.

- Recover nitric acid from the rectifier column underflow and transfer it to the cesium eluant vessels for reuse. These vessels have cooling coils in order to provide the optimum temperature for the eluant.

- Transfer nitric acid eluant to the cesium ion exchange (IX) columns.

- Add fresh nitric acid for evaporator start-up and for cesium eluant vessels make-up.

- Decontaminate vessels with internal wash rings.

- Provide DCS (distributed control system) control and alarms as required. (See Table 4 for a list of instruments and their descriptions, control actions and trips.)

- Protect vessels from overfilling. Level controls, alarms, trips and overflow routes are used in protecting against overfilling. (See Tables 3 and 4 for descriptions of these protective implementations)

4.2. Safety-Related Functions

Safety-related functions support the primary functions by addressing safety concerns and include the following:

- Detect loss of containment by a vessel – liquid leakage into the cell from a vessel is detected by sump liquid level instrumentation.

- Prevent backflow of radioactive material in inactive feed lines – isolation valves or loop seals are included.

- Check cooling water flow – cooling water return lines are monitored for flow.

- Monitor for potential leakage of process fluid into cooling water and condensate – cooling water return lines and jacket steam condensate are monitored for contamination.

- Overpressure protection – V13163, V13026, C13005, E13001 and V13030 are prevented from over-pressurization by being connected (with no valves) to vented vessels. All other vessels and E13002 are vented directly.

- Overheating prevention – temperature regulation, is provided by a continuous flow of cooling water through internal coils in the Cesium and Technetium Concentrate Storage Vessel V13073. The cooling system includes three coils for cooling (one cooling coil and 2 spares).

In the event of a loss of power V13073 has operational procedures that require local temperature, level, and density measurement. Portable instruments and air source will be used to accomplish these requirements in the event of a loss of power.

Another safety-related function is the use of purge air in certain equipment to maintain hydrogen concentrations safely below the lower flammable limit. This applies to the evaporator kettle when not operating, Cesium and Technetium Concentrate Storage Vessel and to the Eluate Receipt vessels, which contain appreciable amounts of Cs. The purge air also serves to remove some of the heat generated from the decay of Cs.

- Operational activities required are shown in Table 1.

Table 2 summarizes the relationship between the safety-related and non-safety-related functions of this system to the process equipment designed to perform these tasks. Additionally, at times internal decontamination of vessels may be required. The vessels are fitted with wash rings for decontamination by flushing. Wash systems have the ability to introduce water, caustic and acid (automated with valve positions sequenced so that caustic is not added directly to equipment that contains acid). Also, the stainless steel-clad cell is fitted with a cladding wash system for walls/floor decontamination purposes. In-cell process equipment is designed to operate without maintenance for the life of the plant. Overflow routes provide containment during any overfill event.

Table 3 gives overflow routings and Table 4 describes the functional requirements of each major instrument in the system.

5. Normal Operations

Figure 1 provides a simplified process flow diagram for PT System 320.

5.1. Cesium Eluate Receipt Vessels

Cesium eluate is delivered from the ion exchange process in periodic batches. It is received in one of two cesium eluate receipt vessels (V13024A/B). Only one receipt vessel per elution cycle receives eluate. Each batch is analyzed to determine the acid concentration, salts concentration, and cesium-137 content prior to automated feeding to the evaporator kettle (V13026) via a reverse flow diverter (RFD)

P13013A/B (V13024A) or P13014A/B (V13024B) , a pulse pot V13025 and lute pot V13163. The eluate liquor received from the eluted ion exchange column is more dilute than the nitric acid concentration required for reuse. This is because some acid is consumed by hydrogen ions exchanging with other monovalent cations at resin sites during the elution process and because some wash water (used for displacing residual caustic and nitric acid from the ion exchange column) is added to the eluate stream.

Purge air will be used continuously to keep any hydrogen formed at a concentration below its lower flammable limit.

5.2. Pulse pot and Evaporator Kettle

The nitric acid recovery evaporator (V13026) is a jacketed kettle, with a built-in mist eliminator to remove aerosols formed during evaporation. Cesium eluate is supplied from the pulse pot (V13025) and enters the evaporator kettle via a lute pot, which is required since the evaporator kettle operates under vacuum. Operating under vacuum serves to reduce the boiling temperature of the liquor. The nitric acid eluate inlet stream is evaporated at the same rate and molarity as it enters the evaporator kettle. Heat input to the evaporator kettle is provided by low-pressure steam supplied to the vessel jacket. Periodically the evaporator must be shut down for removal of concentrate once the concentrate reaches approximately 80% of its solubility limit. The cesium concentrate is extracted from the evaporator kettle by transfer ejector W13042A/B via lute pot V13030 and sent through an outlet line to breakpot V13074 that drains to vessel V13073. This vessel stores cesium and technetium concentrates.

When the evaporator is shut down purge air will be used to keep any hydrogen formed at a concentration below its lower flammable limit. The purge air will also serve as a cooling medium. Cesium decay generates heat that could cause uncontrolled self-boiling.

There is no emptying ejector in V13026, because it operates under vacuum. Emptying for decontamination purposes will be done via V13030.

5.3. Lute Pot V13030

The lute that conveys the evaporator liquor to ejector W13024A/B maintains a vacuum in the nitric acid recovery system. Upon startup lute pot V13030 must be charged with enough liquid to fill the ejector line from the kettle to a barometric head, to allow a vacuum to be formed in the system.

After the kettle contents have been ejected through the lute pot the lute pot must be completely rinsed and emptied of concentrate to ensure crystallization of salts does not occur and heat build up from decaying cesium does not occur. Emptying of this rinse will normally be done with ejector W13024A/B, discharging to V13073 via breakpot V13074. Emptying of V13030 or V13026 for decontamination will be done with the V13030 emptying ejector, which discharges to eluate receipt vessel V13024A. (The emptying ejector at V13024A discharges to the plant wash vessel.)

5.4. Rectifier Column

The vapor leaving the evaporator kettle contains water and nitric acid. The salts (including cesium) dissolved in the feed are non-volatile at evaporator operating conditions and accumulate in the evaporator kettle bottoms. Passing the vapor stream from the evaporator kettle into the rectifying column (C13005) increases the concentration of the recovered acid. The column operates with a relatively high reflux flow with a small water flow from the cesium nitric acid condenser. Recovered acid flows from the bottom of the rectifier to the recovered acid vessel V13028. The column has sieve trays, with the vapor inlet below the lower tray.

The column, being refluxed with condensate from the cesium nitric acid condenser, also serves to remove trace amounts of entrained cesium that may pass through the kettle mist eliminator.

5.5. Cesium Nitric Acid Condenser

The cesium nitric acid condenser (E13001) is a water-cooled, tube unit with condensation taking place on the shell side. The condenser shell incorporates a condensate sump, which contains a weir arrangement to control the flow split between the reflux and the overhead product flows.

5.6. Aftercondenser

To reduce the boiling temperature of the liquids in the evaporator kettle, the system is run under vacuum. This is achieved using a two-stage steam ejector system. Exhaust vapors from the ejectors are condensed in an aftercondenser (E13002) prior to venting the exhausted gases to the ventilation system scrubbing equipment. Process condensate, from the cesium nitric acid condenser and aftercondenser, drains to the process condensate vessel (V13029) where it is then transferred to the Primary Acidic/Alkaline Effluent vessel V15013 located in system PT-550.

5.7. Process Condensate Pot

The Process Condensate Pot collects condensate from the cesium nitric acid condenser and the aftercondenser and transfers it to the Primary Acidic/Alkaline Effluent vessel, V15013.

Upon start-up, the Process Condensate Pot must be charged with enough liquid to fill the downcomer, from the condenser to a barometric head. As start-up proceeds, the condensate completely fills the downcomer and the level in the condenser sump is established. The process Condensate Pot operates completely flooded with liquid.

5.8. Recovered Acid Vessel and Cesium Eluant Vessels

Recovered acid is reusable as eluant and flows by gravity from the bottom of rectifying column C13005 to the recovered acid vessel (V13028). From this vessel, if the acid needs reprocessing as evidenced by activity above allowable levels, it is recycled through the evaporator via eluate receipt vessel V13024A; otherwise, the acid is transferred to one of two cesium eluant vessels V13027A/B. The recovered acid in these two vessels is sampled and the acid concentration determined. Cooling water pumped through in-vessel coils cools the eluant vessels contents.

During evaporator start-ups, the recovered acid vessel must be charged with enough liquid to fill the downcomer from C13005 to a barometric head, which will allow for vacuum operations in the system.

Because some acid is consumed during the elution process, fresh acid must be added to the cesium eluant vessels to bring the contents back to the original volume. Depending on the concentration of the recovered acid sample, some adjustment may be necessary. Nitric acid is supplied by the nitric acid dilution vessel (T16002) and delivered to the cesium eluant vessels (V13027A/B). The volume and dilution of this fresh acid is automatically calculated from the volume and concentration of the recovered acid. Excess volume in the eluant vessels may be purged via an ion exchange column through V13008 in system 310 to the Primary Acidic/Alkaline Effluent Vessel V15013.

When an ion exchange column requires elution, acid from one of the cesium eluant vessels is transferred by P13004A or B through the column.

5.9. Concentrate Storage Vessel V13073

Cesium and technetium concentrates are stored in the same storage vessel (V13073). The cesium and technetium concentrates are blended with other HLW waste feeds to the blending vessel (V12007), for processing by the HLW melter. The concentrates are transferred in batches to vessel V12007 via RFDs P13038A/B.

Internal cooling coils remove heat generated in V13073 caused by radioactive decay and/or neutralization. The normal cooling system will include three coils; one operating and two spares. If a situation occurs where the inventory of radionuclides in the vessel is large, a hazardous situation could occur due to loss of cooling, since self-boiling is possible. Therefore, the vent system is designed to remove adequate heat to prevent boiling of the concentrate. A process condensate make up line is available for make up water to the vessel to counteract any evaporation of the water in the concentrate.

The emptying ejector for V13073 discharges to V13024A for the same reasons given for lute pot V13030.

5.10. System Operation and Control

Selection of evaporator operating pressure for each batch of eluate in vessels V13024A or B is done as follows:

- The nitric acid concentration in the vessel (V13024A or B) is determined from sampling and analysis.
- The absolute operating pressure (or vacuum) is chosen from vapor-liquid equilibrium data such that the average HNO_3 concentration in the evaporator vapor is approximately the same as the HNO_3 concentration in the feed to the evaporator.

On start-up, the evaporator kettle is initially charged with a concentration of nitric acid. This fresh nitric acid is supplied to the evaporator kettle by the nitric acid dilution vessel T16003 via pulse pot V13025 and lute pot V13163. The acid recovery vessel, V13028, process condensate vessel, V13029, and the lute pot, V13030 must be charged with enough liquid for a barometric leg in their respective downcomers to be formed in order to allow for a vacuum to be created in the evaporator kettle, rectifier and condenser.

Every batch of eluate received in V13024A or B is analyzed to determine the cesium content, total salt, and the nitric acid concentration. This allows the total inventory of cesium and total salt fed to the evaporator to be automatically calculated, as well as the reflux flow rate required to the rectifier to produce HNO_3 rectifier bottom product. The feed and evaporation rates to the evaporator are calculated from the volume of the eluate batch and the operating pressure is automatically determined from the concentration of the eluate.

Evaporator/rectifier pressure control is achieved with a control loop that regulates vacuum by bleeding a small airflow into the suction line of the vacuum ejectors via an automatic outcell modulating control valve. Evaporator temperature is a function of the amount of vacuum.

The evaporation rate is not directly monitored. A portion of the heating duty for evaporation is derived from the energy release associated with Cs decay. The remainder of the evaporation heating duty is proportional to the rate at which steam condenses in the evaporator jacket. Steam to the evaporator jacket is flow controlled and runs at a rate such that the volume of V13024A/B is depleted, which is the time between elutions of ion exchange columns.

Reflux flow to the rectifier is controlled using a weir arrangement as shown in **Error! Reference source not found.**. Process condensate collects in a sump built into the shell of the overheads condenser. Condensate flows to Condensate Pot V13029 via a downcomer pipe and over a notched weir and back to the rectifier as reflux. Condensate Pot V13029 operates at full capacity to ensure vacuum conditions are maintained in the system and a level is maintained over the weir.

It is important for stable operation of the rectifier column that the reflux flow is not interrupted. For this reason, the weir over which the reflux stream must flow is in the form of a very narrow notch.

Operation of the evaporator/rectifier system may continue for approximately 1 year by which the time the salts inventory in the evaporator kettle reaches approximately 80% of the solubility limit. The evaporator must then be shut down to avoid crystalization of nitrate salts,and the concentrate is transferred to vessel V13073. Once the evaporator is shut down the purge air must be turned on. Once the kettle has been emptied the lute pot must be rinsed of concentrate to ensure cesium decay heat can boil the remaining concentrate in the pot.

5.11. Effluents

The effluent streams from the acid recovery process and their disposal routes are as follows:

Stream Description	Disposal Route
Steam condensate from evaporator jacket	Non-active condensate vessel V19701*
"Water" from rectifier overheads	Pretreatment Primary Acidic/Alkaline Effluent vessel V15013**

* If condensate from jacket is radioactive, it is routed to plant wash vessel V15009 (See Section 6.14).
** The condensate from the rectifier overheads will not be acidic enough to require neutralization and will be treated as process condensate.

The following utility streams are monitored outcell for potential contamination as they exit the process:

- Cooling water from overhead condenser E13001
- Cooling water from aftercondenser E13002
- Cooling water from vessel cooling coils V13027A/B
- Low-pressure steam condensate from the jacket of evaporator V13026
- Cooling water from concentrate storage vessel V13073.

Based on sampling it may be necessary to reject some recovered acid, and replace it with fresh acid. To remove contaminated acid, the acid would need to be transferred to V13008, via an ion exchange column and sent to the Primary Acidic/Alkaline Effluent vessel V15013.

6. Safety and Interlock Requirements

A preliminary overview of the interlock features necessary to maintain operability is as follows:

- Overfilling – all vessels are protected against overfilling by liquid level indication, high-liquid-level instrumentation interlocks to shutoff all feed sources and DCS control functions with hard-wired trips as required. Overflow piping from each vented vessel prevents liquid from entering the vent system. (See Tables 3 and 4.)

- Cooling system failure in concentrate storage vessel (V13073) – due to the heat generated in V13073 from cesium decay and/or neutralization, two cooling coils; one operating and one spare, with a cooling water supply are provided for temperature control. If a failure should occur in the cooling water system, the vent system is designed to remove adequate heat to delay the advent of boiling of the concentrate. A process water line is available for makeup water to the vessel to counteract any evaporation of the water in the concentrate.

- Loss of containment – vessel containment loss is detected by liquid level indication in the cell sump, and in the event of extremely low-liquid-level, DCS control and alarms will function as required, including shut-off of all feed sources. The cell, which drains to a sump, contains any liquid leakage in this system, and a steam ejector is used to empty the sump as needed. The cell is lined with stainless steel.

- Loss of cooling water to condenser – if there is a loss of normal cooling water, and backup cooling water is not available, the vacuum ejectors system and the evaporator will automatically shut down.

- Inadvertent transfers of fluids – all system sequential transfer operations are interlocked.

- Hydrogen generation – purge air will be used continuously to disperse any hydrogen formed by radiolysis in the eluate receipt vessels. Purge air will also be used in the evaporator to disperse hydrogen, but only when the evaporator is shutdown.

Table 1. Operational Activities for System PT-320

Operational Activity	Definition
Process eluate	Evaporation to concentrate cesium, and rectification to recover nitric acid for reuse as eluant
Contain	Process equipment is monitored for leakage
Monitor	Instrumentation, online analysis, monitor/control the operations
Condense	Condense water vapor in rectifier overhead

Table 2. Safety-Related and Non-Safety Related Functions of the Cesium Nitric Acid Recovery System

Function	Activity	Description of Function	Equipment
Receive eluate from cesium ion exchange columns C13001-4 & C13011.	Process eluate	Eluate is pumped through the Cs-IX columns and is stored for analysis of nitric acid strength, salts concentration and Cs content.	Cesium Eluate Receipt Vessels V13024A/B
	Contain	Leakage into cell is detected by liquid level instrumentation in the cell sump with DCS [a] control and alarms.	
	Monitor	Vessel protected from overfilling by liquid level instrumentation with DCS control and alarms.	
Transfer eluate from receipt vessels to evaporator via a pulse pot.	Process eluate	Eluate is pumped from receipt vessels to pulse pot V13025 that gravity feeds the evaporator via a lute pot V13163.	Pulse pot V13025 RFDs [b] P13013A/B and P13014A/B Lute Pot V13163
	Contain	Leakage into cell is detected by liquid level instrumentation in the cell sump with DCS control and alarms.	
	Monitor	Liquid level in the lute and lute pot is adequate to pull a vacuum in the evaporator kettle V13026.	
	Monitor	Liquid level for the evaporator is maintained using its liquid level measurement as a controller set point for modulating the RFD feeding the pulse pot, which in turn feeds the evaporator.	
Recover nitric acid and water vapor from evaporator overhead in rectifier column. Additionally, recover cesium concentrate from the evaporator bottoms.	Contain	Leakage into cell is detected by liquid level instrumentation in the cell sump with DCS control and alarms.	Evaporator Kettle V13026 Rectifier Column C13005
	Monitor	Vessel protected from overfilling by liquid level instrumentation with DCS control and alarms.	
	Monitor	Condensate from evaporator jacket is monitored for conductivity, which will indicate contamination.	
	Process eluate	Evaporate eluate and rectify vapors.	
	Monitor	Evaporator/rectifier pressure control is achieved with a control loop that regulates vacuum by bleeding a small airflow into the suction line of the vacuum ejectors via a modulating control valve.	
	Monitor	Evaporator temperature is a function of the amount of vacuum. Steam to the evaporator jacket is flow controlled. The evaporation rate is not directly monitored, but a portion of the evaporation duty is proportional to the rate at which steam condenses in the jacket.	

Table 2. Safety-Related and Non-Safety Related Functions of the Cesium Nitric Acid Recovery System

Function	Activity	Description of Function	Equipment
Transfer concentrate to storage vessel V13073, via breakpot V13074, which collects both technetium and cesium concentrates	Contain	Leakage into cell is detected by liquid level instrumentation in the cell sump with DCS control and alarms.	Concentrate Lute Pot V13030; Ejector W13042A/B; Cesium and Technetium Concentrate Storage Vessel V13073; Breakpot 13074
	Monitor	Liquid level in the lute and lute put, V13030, is adequate to pull a vacuum in the evaporator kettle V13026.	
	Process	Cesium concentrate is transferred by steam ejection, via lute V13030 and breakpot V13074, to the Cesium and Technetium Concentrate Storage Vessel.	
Recover water vapor from the rectifier column via a two-stage condenser system and collect condensate product in a pot for eventual transfer to the Pretreatment Effluent Collection system.	Condense	Water vapor, along with some nitric acid vapor, is condensed. Some of the condensate is refluxed back into the rectifier and the remainder flows by gravity to the process condensate pot.	Condensers E13001 & E13002 Process Condensate pot V13029
	Monitor	All cooling water return lines are monitored for flow and contamination.	
	Monitor	Vessel protected from overfilling by liquid level instrumentation with DCS control and alarms.	
	Contain	Leakage into cell is detected by liquid level instrumentation in the cell sump with DCS control and alarms.	
Recover nitric acid from the rectifier column underflow and transfer to the cesium eluant vessels for reuse.	Process eluate	Nitric acid flows by gravity from the bottom of the rectifier column to the Recovered Acid Vessel.	Recovered Acid Vessel V13028 RFDs P13015A/B and P13016A/B Recovered Acid Vessel V13028 with ejector W13058, Eluate Receipt Vessel (Vessel V13024A) and Breakpot V13054
	Monitor	Vessel protected from overfilling by liquid level instrumentation with DCS control and alarms.	
	Monitor	If excessive radioactivity is detected in feed to vessel V13028, then the recovered acid can be transferred to vessel V13024A via breakpot V13054, for recycle through the system.	
	Contain	Leakage into cell is detected by level instrumentation in the cell sump with DCS control and alarms.	
Transfer nitric acid from the cesium eluant vessels to the cesium ion exchange columns C13001-4 & C13011.	Process eluate	One eluant vessel is being sampled for nitric acid strength while the other is supplying nitric acid eluant to an IX [c] column	Cesium Eluant Vessels V13027A/B
	Contain	Leakage into cell is detected by liquid level instrumentation in the cell sump with DCS control and alarms.	
	Monitor	Vessel protected from overfilling by liquid level instrumentation with DCS control and alarms as required.	
	Monitor	Temperature control is provided to the cesium eluant vessels by a cooling water supply and is monitored for contamination and flow.	

Table 2. Safety-Related and Non-Safety Related Functions of the Cesium Nitric Acid Recovery System

Function	Activity	Description of Function	Equipment
Collect and store both cesium and technetium concentrates by transferring from cesium lute pot V13030 and from technetium lute pot V13072, via breakpot V13074.	Process eluate	Transferred in batches from lute pots using ejectors.	Technetium Concentrate Lute Pot V13072 Cesium and Technetium Concentrate Storage Vessel V13073 Breakpot V13074
	Contain	Leakage into cell is detected by liquid level instrumentation in the cell sump with DCS control and alarms.	
	Monitor	Vessel protected from overfilling by liquid level instrumentation with DCS control and alarms as required.	
	Monitor	Temperature control is provided by internal coils with cooling water that operates continuously and is monitored for contamination.	

[a] DCS = Distributed control system
[b] RFD = reverse flow diverter
[c] IX = ion exchange

Table 3. Overflow Routes for Cesium Nitric Acid Recovery System Vessels

Vessel No.	Overflow Route
V13024A Cesium Eluate Receipt Vessel	Overflows to V13024B
V13024B Cesium Eluate Receipt Vessel	Overflows to V13024A and a secondary overflow to V15009 located in the Plant Wash System.
V13054 Off-spec Eluant Break Pot	Overflows to V13024A
V13025 Evaporator Feed Pulse Pot	Overflows to V13024B
V13028 Recovered Acid Vessel	Overflows to V13024A
V13027A Cesium Eluant Vessel	Overflows to V13027B
V13027B Cesium Eluant Vessel	Overflows to V13027A and a secondary overflow to V15009 located in the pretreatment Effluent System
V13073 Cesium & Technetium Concentrate Storage Vessel	Overflows to V13024A

Table 4. Instrument Description for the Cesium Nitric Acid Recovery System (PT-320)

Instrument No.	Description	Control Action	Trip Actions *
L132002	Level on V13024A	At a normal-upper level reading the IX columns LAW and reagents feed pump, P13004A or B will be switched off and associated valves closed or permissive not to begin elution. At a normal-lower level the RFDs P13013A/B, internal transfer devices and pulse tube mixers will be switched off. When using the plant wash ejector low level shuts it off.	High level trips P13004A or B and off closes associated valves and other incoming liquid flows trip off excluding W13058. Low level trips off RFD P13013A/B, internal transfer devices and pulse tube mixers off.
L132003	Level on V13024B	At a normal-upper reading the IX columns LAW and reagents feed pump, P13004A or B will be switched off and associated valves closed permissive not to begin elution. At a normal-lower level the RFD P13014A/B, internal transfer devices and pulse tube mixers will be switched off. When using the plant wash ejector low-low level shuts it off.	High level trips off P13004A or B off and closes associated valves and other incoming liquid flows. Low-low level trips off RFD P13014A/B, internal transfer devices and pulse tube mixers off.
L132004	Level on V13026	Control the modulation (alternating the frequency or air pressure) of the RFDs P13013A/B and P13014A/B feeding the Kettle Evaporator pulse pot V13025. Also will shut off the inlet for the charge at the operating level.	High level trips off P13013A/B or P13014A/B and other incoming liquid flows. Low level trips off the steam flow to the jacket and ejector W13042A/B.
D132004	Density of V13026	Level compensation and concentration indicator, high density is alarmed.	High-high density will result in a system trip to prevent precipitation of salts.
T132201	Temperature of V13026	Measurement and alarm of high temperatures.	High temperature will trip result in system trip.
P132101	Pressure at top of V13026	Controls AV13206, the air bleed to the steam ejectors, which governs the amount of vacuum in the kettle. High pressure will be alarmed.	A high-high pressure (loss of vacuum) results in a system trip.

Table 4. Instrument Description for the Cesium Nitric Acid Recovery System (PT-320)

Instrument No.	Description	Control Action	Trip Actions *
P132102	Pressure drop across mist eliminator in V13026	Measurement. A high differential pressure (versus P132101) is alarmed.	A high-high differential pressure (versus P132101) results in a system trip.
F132150	Flow of steam to V13026 steam jacket	The flow controller controls the modulating valve for the steam entering the jacket, at a flowrate proportional to the volume of eluate plus rinse water that is transferred into V13024A/B. High and low flows are alarmed.	No trips are initiated by F132150.
L132009	Level of condensate in condenser sump	The level reading in E13001 controls the modulation of RFD P13069A/B.	Low level will trip off RFD P13069A/B. A high level results in a system trip.
R132251	Activity of recovered acid flowing to V13028	A high reading results in an alarm.	A high- high reading will result in recycling acid to V13024A via W13058 and shutting off.
L132005	Level of V13028	A normal-upper level will result in the switching on of RFDs P13016A/B or P13015A/B. A normal-lower level will result in switching off of RFDs P13016A/B, P13015A/B and W13058. (When using the plant wash ejector low level would need to be reset to allow for emptying of vessel).	High level results in a system trip. Low level will trip off RFDs P13016A/B, P13015A/B, W13058 and plant wash ejector.
L132006	Level of V13029	Measurement. (Note: there are no high - level alarms or trips because this vessel runs flooded)	Low level results in a system trip.

Table 4. Instrument Description for the Cesium Nitric Acid Recovery System (PT-320)

Instrument No.	Description	Control Action	Trip Actions *
L132007	Level of V13027A	A normal upper level trip results in stopping the feed RFD P13015A/B (V13028), fresh HNO_3 addition, initiate automated changeover to V13070B and sampling of eluant and signal operator this has taken place. A normal lower level will switch P13004A or B off and close associated valves, and switch internal transfer devices, pulse tube mixers off. (When using the plant wash ejector low level would need to be reset to allow for emptying of vessel).	A high level trips off P13015A/B and HNO_3 make up feed and other incoming liquid flows. A low level will trip off P13004A or B and close associated valves, and trip off internal transfer devices, pulse tube mixers and plant wash ejector.
T132202	Temperature of V13027A	Maintain temperature of eluant in a certain range.	Alarms
T132203	Temperature of V13027B	Maintain temperature of eluant in a certain range.	Alarms
D132007	Density of V13027A	Measurement. (Note: A high density will be alarmed)	No trips are initiated by D132007
L132008	Level of V13027B	A normal upper level will result in stopping the feed RFD P13016A/B (V13028), HNO_3 make up feed and initiates automated changeover to V13070A and sampling of eluant and signal operator this has taken place. A normal lower level will switch P13004A or B off and close associated valves, and switch internal transfer devices and pulse tube mixers off. (When using the plant wash ejector low level would need to be reset to allow for emptying of vessel).	A high level trips off P13016A/B and HNO_3 make up feed and other incoming liquid flows. A low level trips off P13004A or B and close associated valves, and trip off internal transfer devices, pulse tube mixers and plant wash ejector.
D132008	Density of V13027B	Measurement. (Note: A high density will be alarmed)	No trips are initiated by D132008

Table 4. Instrument Description for the Cesium Nitric Acid Recovery System (PT-320)

Instrument No.	Description	Control Action	Trip Actions *
T132204	Temperature of V13074	None.	High temperature trips off ejector W13097A/B and W13042A/B (DWG-W375LP-PR00009)
T132205	Temperature of V13073	Measurement	High temperature alarms.
L132015	Level of V13073	An upper operating level trips of the ejectors W13097A/B and ejectors W13042A/B from the cesium nitric acid recovery system. A lower operating level shut off P13038A/B.	High level trips the ejectors W13097A/B and W13042A/B off and alarms. Low level trips P13038A/B off and alarms.
L132014	Level of Lute Pot V13030	Measurement to ensure that adequate liquid has been added to the lute pot V13030 to allow a vacuum to be pulled in V13026	None.
L132016	Level of Lute Pot V130163	Measurement to ensure that adequate liquid has been added to the lute pot V13163 to allow a vacuum to be pulled in V13026	None.
T132206	Temperature of Breakpot V13054	None.	High temperature trips off ejector W13058
R132250	Conductivity of V13026 steam jacket condensate	Measurement	A positive measurement will result in a system trip.

* A system trip will trip off the following: P13013A/B, P13014A/B, steam flow to the kettle jacket, P13016A/B, P13015A/B, P13069A/B, W13045A/B, W13046A/B.

** All trips will have an alarm to signal that a trip has taken place.

*** For L132002/3 in V13024A/B, if the Cs online monitor R131251 or R131252 indicates a normal low Cs content in the eluate after a peak content has occurred, the control action (stopping of elution) will occur before the normal-upper level reading.

Figure 1. Basic Flow Diagram for the Cesium Nitric Acid Recovery System (PT 320)

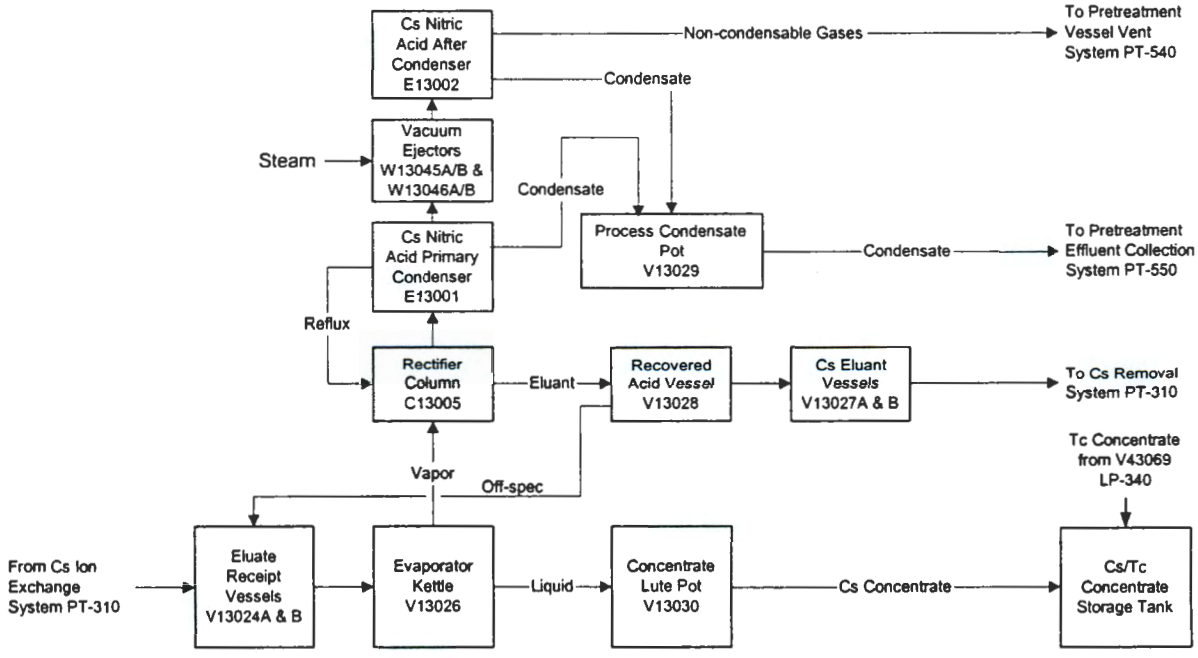

PT System 540: Pretreatment Plant Vessel Vent

1. Introduction

This system description describes the vessel vent system for the pretreatment plant.

The Pretreatment (PT) Vessel Vent System receives off-gases from PT vessel vents and/or exhaust streams from reverse flow diverters (RFD's) and pulsejet mixers (PJM's) originating from PT process systems. The PT Vessel Vent System includes equipment to treat the off-gasses originating from the process vessels. After treatment in the PT Vessel Vent System, the treated vessel off-gas proceeds to the PT Vessel Vent Extract System.

The exhaust from the jet pumps (RFD's) and pulse jet mixers (PJM's), is treated in the PT Vessel Vent System but remains separate from vessel exhausts through the PT Vessel Vent System and the PT Vessel Vent Extract System.

The upstream and downstream systems have functions that are important to and integral with the PT Vessel Vent System. Upstream of the process vessel is an air inlet system that regulates air in-bleed rates to each process vessel. The motive force is provided by the ventilation fans downstream of the vessel vent system. This air in-bleed is the hydrogen control strategy for PT. The negative pressure maintained in each process vessel by the PT Ventilation also provides the containment function for air-borne radionuclides.

2. Applicable Document

This system description provides a listing of supporting and supplemental project documents, describes the process, and identifies and describes safety and non-safety related functions. This document also describes normal operations, and the safety and interlock requirements.

PFD: Process Flow Diagram - Pretreatment Vessel Vent System, Drawing No. DWG-W375PT-PR00014

3. Functions

The primary functions of the PT Vessel Vent System include:

- Removal of solids
- Removal of liquid droplets and mists
- Prevention of condensation in the high efficiency particulate air (HEPA) filters (heating)
- Absorb soluble gases
- Treat volatile organic gases

Secondary functions of the PT Vessel Vent System in combination with other systems include:

- Maintaining negative vessel pressures in an acceptable range
- Safely exhausting flammable gases (hydrogen)
- Controlling pressures and purge air flowrates through the process vessels

All these functions will be described in more detail in the following subsections.

3.1 Operational Functions
3.2 Safety Related Functions
3.3 Non-safety related functions

3.1. Operational Functions

The PT Vessel Vent System contains equipment that perform the following operational functions:

- Removing solids, liquid droplets, and mists from the vent system off-gas
- Cooling the vent system off-gas and absorbing soluble gases
- High efficiency mist eliminator (HEME) Isolation
- HEME washing
- Removing scrubber wash solution and HEME wash water
- Reducing volatile organic carbon (VOC) concentrations in the off gas with the VOC oxidation unit
- Reducing VOC emissions in the off gas with carbon beds
- Heating exiting vent system off-gas
- Control system operating pressure and exhaust flow rates
- Provide for decontamination of the exhaust air stream
- Provide for remote and automatic operations
- Allow for contact maintenance

Performance of these operational functions will accomplish the five primary functions; in addition the three secondary functions will be accomplished in combination with the air inlet, exhaust collection system, and the downstream PT Vessel Vent Extract System.

The operational functions include the following work activities:

- Containing the waste
- Monitoring the system
- Controlling air flows and pressures

The PT Vessel Vent System in combination with upstream and downstream systems provides the radiolytic hydrogen control strategy for the PT facility. The PT Vessel Vent Extract system will maintain continuous operation to provide the hydrogen control function, with emergency backup power generators for the exhaust fans.

Additional functions include the following:

- Monitoring inlet pressures. The inlet pressures of the three collection piping headers entering the PT Vessel Vent System will be monitored.

- Monitoring differential pressure. The differential pressure across the scrubber (C15001) and the HEMEs will be monitored.

- Preventing liquid from entering the vent system. The water level in the scrubber (C15001) sump will be monitored to prevent a subsequent liquid discharge to the HEPA filter in the PT Vessel Vent Extract System.

- Monitoring liquid level in the HEME seal pots. The water level in the HEME seal pots will be monitored by level indicator.

- In-cell leakage detection and alarm. The area drainage sump will have a level switch to detect and alarm leakage in the cell.

4. Description

This section is a general description of the PT Vessel Vent System. The PT Vessel Vent System will be operational at all times.

The off-gas streams from the PT vessels flow through a network of subheaders (piping) to two major collection headers. The vessel outlet vent lines, subheaders, and headers are part of a separate system from the PT Vessel Vent System. The collection piping system is important to the PT Vessel Vent System in that the vessels are arranged approximately in order of increasing concentrations of radionuclides and are segregated into two process streams:

- VOC – Oxidizer Header
- Vessel vents header

The slope of the vessel vent headers should, where possible, be toward the higher active vessels to prevent contamination of low active vessels in the event of flooding of the vent header. The function and composition of each header and process stream determines the type of treatment needed. The equipment components and function of each are described in detail in the following sections and subsections.

The PT Vessel Vent System includes a caustic scrubber, HEMEs, a VOC oxidation unit, carbon bed adsorbers, and pressure control devices to control pressure of inlet process streams to this system. The equipment listed treats the off-gasses originating from the process vessels. After treatment in the PT Vessel Vent System, the treated vessel off-gas proceeds to the PT Vessel Vent Extract System. The PT Vessel Vent Extract System includes a hot air injection system with electric heating coils and backflow HEPA filters. Downstream of the hot air injection the PT Vessel Vent Extract System includes HEPA filters, extract fans, stack air stream monitoring, and the exhaust stack (Reference SD-W375PT-HV00005, *PT Vessel Vent HVAC System Description*). The carbon bed adsorbers are part of the PT Vessel Vent System. They are located, however, downstream of the HEPA filters and upstream of the extract fans, both of which are part of the PT Vessel Vent System.

The exhaust from the reverse flow diverters (RFD's) and pulse jet mixers (PJM's), is treated in the PT Vessel Vent System with HEMEs. After the HEMEs the RFD/PJM off-gas proceeds to the PT Vessel Vent Extract System. This exhaust stream remains separate from vessel exhausts through the PT Vessel Vent System and the PT Vessel Vent Extract System. The RFD/PJM exhaust portion of the PT Vessel Vent Extract System also includes a hot air injection system with electric heating coils and backflow HEPA filters, high efficiency particulate air (HEPA) filters, extract fans, stack air stream monitoring, and the exhaust stack.

The purpose for separation of the vessel exhaust treatment and RFD/PJM exhaust through the PT Vessel Vent System is to allow better control of pressures and exhaust air flow rates as well as to minimize the size of emission abatement equipment (VOC unit, carbon beds, and scrubber) intended to reduce PT plant emissions. The RFD/PJM exhaust stream is a much higher flow rate than vessel exhaust and contains a lower concentration of radionuclides and volatile emissions. Variable speed fans provide pressure control

on the overall vessel vent air stream. There are also vortex amplifier (VXA) pressure controllers on the subheaders containing the VOC oxidizer and the caustic scrubber.

The overall purpose of the PT Vessel Vent System is to remove airborne solids, liquid droplets, mists, and certain gases and to prevent condensation in the HEPA filters. The upstream and downstream systems have functions that are important to and integral with the PT Vessel Vent System. The air inlet system upstream provides the hydrogen control strategy described earlier. The downstream PT Vessel Vent Extract System fans maintain negative vessel operating pressures in the process vessels.

The general description of the PT Vessel Vent System is provided in the following subsections.

4.1 Vessel Vent Caustic Scrubber
4.2 HEME mist eliminators and Pre-Heaters
4.3 VOC oxidation unit
4.4 Carbon bed adsorbers
4.5 Collection (exhaust piping system)
4.6 Air inlet (air purge system)

4.1. Vessel Vent Caustic Scrubber

The vessel vent exhaust streams are collected into two major headers: VOC-header and vessel vent header, prior to treatment in the PT Vessel Vent System. The caustic scrubber, C15001, treats the vessel vents exhaust stream. By configuring the vessel vent system into 2 segregated streams, separate from the RFDs and PJMs exhaust air, the flow rate to the scrubber and required design capacity are reduced significantly.

The caustic scrubber treats vents from all process vessels not on the VOC header.

A caustic scrubber is a standard unit in many nuclear plants. The vent gas flows up the column through a bed filled with Raschig rings or similar packing, and sodium hydroxide solution flows down through the bed. Contact between the gas and the liquid in the bed causes a portion of the NOx in the vent gas to dissolve and form sodium nitrate. The scrubbing liquor collects in the sump of the column, and any excess overflows to Pretreatment Effluent Collection, V15013.

The caustic scrubber solution is recirculated by a pump. A pipe leaves the base of the scrubber, leading to the pump suction and returns liquid to the column above the top of the packing. Above this point there is another packed section, with very fine packing rings to act as a disentrainment section and prevent caustic loss. There is a water wash ring above the disentrainment section in the column to wash any accumulated caustic solid off the packing. Fresh caustic is supplied to the unit by metering pump from the reagents system.

The scrubber provides removal of radioactive aerosols and reduces the radioactive particulate loading rate on the downstream HEMEs. A decontamination factor of about 10 is expected. This is equivalent to 90% removal efficiency.

Demineralized water will be added to the scrubber, when needed, via the wash rings. Excess recirculation solution from the scrubber will be routed to Pretreatment Effluents, the primary acidic/alkaline effluent vessel, V15013. After leaving the scrubber, the off-gas flows to the HEMEs. Positioning the scrubber ahead of the HEMEs saturates the gas flow and enables the HEMEs to avoid damage from dry operation.

The scrubber is provided with a bypass line and valve. The bypass function is to permit continued operation of the hydrogen control system in the unlikely event the scrubber becomes plugged or disabled.

4.2. HEME Mist Eliminators and Pre-heater

The vessel vent exhaust streams are collected into two major headers: VOC- Header and vessel vent header, prior to treatment in the PT Vessel Vent System. The VOC stream is treated in a VOC Oxidation unit. The vessel vents header stream is treated in the caustic scrubber. The scrubber and VOC unit are both described in a separate section. The combined air stream leaving the VOC unit is routed to a pair of HEMEs.

The stream containing jet pump exhausts from RFDs and PJMs is a high volume stream compared to the process vessel exhausts. This stream is handled separately through the PT Vessel Vent System. This stream is routed through HEMEs larger than the HEMEs used on the vessel vents. There are 4 RFD/PJM HEMEs. Three of the units are in service and one off-line. This configuration allows time to wash each HEME off-line.

All HEMEs are located in a C5 cell, or a shielded room outside of the C5 process cells. The HEMEs are isolated, or put into service, by filling or emptying inlet and outlet seal pots. The seal pots are filled with water and emptied with redundant ejectors. Seal pots are used in place of isolation dampers to ensure the air stream cannot be blocked by isolating all the HEMEs. The system will be designed without a bypass around the HEMEs to prevent the downstream HEPAs from accelerated loading of radionuclides.

HEMEs are composed of regenerable deep-bed fiber filters configured in an annular shape to remove fine aerosols. Gas flows from the outside to the inside hollow core, from which the clean gas exits at the top and the collected liquid exits at the sealed bottom in a drainpipe. Various fibers and other construction materials can be selected for their resistance to gas constituents, it is likely that a glass fiber cartridge will be used in this application. Due to uncertainties in selection of the best available cartridge material, possible degradation over time, and the long design life for the facility, remote changeout capability for the cartridge will be provided.

HEMEs are commonly used to remove fine aerosols, and can exhibit removal efficiencies of up to 99.9% even for submicron aerosols. They are passive devices with low maintenance requirements and high reliability - the HEME in the offgas system of the PAMELA vitrification plant in Belgium lasted the entire five years of the plant life.

The HEMEs will operate wet, as the liquid aerosols accumulate, form a liquid film and drop to the drain. Intermittent water spraying of the filter elements will be used to wash down and remove any accumulated debris, thus extending the service life of the devices. This washing will normally be off-line.

Two HEMEs will be required for the vessel vents only stream. The PJM stream will contain four vessels, each containing three HEME elements. The HEMEs for both systems will be specified to provide 99.8% removal of activity. This will protect the HEPA filters downstream from excessive activity build up, and allow manual hands-on changes of HEPA filters.

It is expected that a HEME could be washed daily, and therefore will be designed for frequent washing. The HEME washings and the effluent will be discharged to the primary acidic/alkaline effluent vessel, V15013.

After the vent system off-gas passes through a HEME it is mixed with hot air from the hot air injection system. The hot air injection system draws air through HEPA filters from a C3 area. The air is heated with an electric in-line heater such that the combined air stream is above its dewpoint to prevent condensation in the PT Vessel Vent Extract System HEPA filters. The HEPA filters in the hot air injection line protect against backflow of contamination into the C3 area and protect the heaters from contamination for maintenance.

4.3. VOC oxidation unit

The VOC unit destroys organics by heating the gas stream. The gas enters the unit through a heat exchanger, is preheated by an electric heater, and is held at a set temperature long enough to ensure nearly complete oxidation of all organics present. Gas leaves through the first heat exchanger to allow heat recovery and minimize energy consumption.

After the VOC unit the gas stream combines with the air stream from the scrubber.

4.4. Carbon Bed Adsorbers

Downstream of the combined vessel vents stream are the two HEMEs described in a previous section. The effluent from the HEMEs is routed to the PT Ventilation System. The PT Vessel Vent Extract System includes a hot air injection system with electric heating coils and backflow HEPA filters, HEPA filters, extract fans, stack air stream monitoring, and the exhaust stack. The carbon bed adsorbers are part of the PT Vessel Vent System. They are located, however, downstream of the HEPA filters and upstream of the extract fans, both of which are part of the PT Vessel Vent System.

Two parallel carbon beds, are provided in the design. A bypass line and valve is included in the event both units are out of service or are not needed. Normal operation is one unit on line and the other in maintenance and regeneration mode.

The carbon beds function is to remove VOC from the combined air streams from process vessels. The VOC oxidation unit removes most of the VOCs from the evaporator and condensate tanks on that header. The carbon beds are designed to remove the VOCs remaining in each stream, and further reduce plant emissions.

4.5. Collection (exhaust piping system)

From the individual process vessels a vent line routes exhaust gases to a subheader, usually one for each cell or group of vessels within a cell. The connection to the subheaders from the process vessels are arranged, where possible, to maintain airflow from normally lower activity vessels to (or past) normally higher activity levels vessels. This will help prevent contamination of lower active vessels due to potential reverse flow, or in-breathing. The sub header locations and the overall flow schematic will also be influenced by the plant layout and by the physical location of the three major vessel vent headers.

Final sizing of the individual exhaust vent lines will be determined by airflow, process pump (RFD) capacities for filling vessels, and other potential pressurization scenarios. The individual exhaust vent lines, the subheaders, and the headers will also be sized to minimize overall pressure drop and help balance the system.

4.6. Air inlet (air purge system)

The collection-piping network was described in the previous section. Because the PT process system design is basically an airtight design the overall gas exhaust flow (except for evaporation, boiling, etc) is directly dependent on the air purge rates provided to each individual process vessel.

Continuous air purge to process vessels is the primary control strategy for radiolytic produced hydrogen. Additional airflow above the minimum hydrogen control rate may be introduced to each vessel to help balance the system and ensure that all vessels are obtaining the minimum required flow. Additional airflow, above the minimum for hydrogen dilution will also be introduced to individual vessels to remove heat by evaporative cooling. This function will help prevent boiling of self-heating tanks during an extended shutdown.

The air inlet header system consists of air inlet headers. Each inlet header is fitted with HEPA filters, isolation valves (to change HEPA filters if needed), balance/control valves to regulate flow, and a flow measurement device. Each inlet header will obtain air, at atmospheric pressure, from a C3 area and flow to a group of tanks supplied by that subheader. The supply lines are designed for the desired balance and total flow actively regulated at the inlet by the control valves. The HEPA filters protect the C3 area from contamination in the event of reverse airflow, but airflows and balance will be designed to prevent reverse flow. The air inlet headers will supply air to groups of vessels, initially each process cell. The supply air arrangement will be independent of the exhaust air gathering system.

4.7. Safety and Interlock Requirements

The PT Vessel Vent System has safety features. Typical safety design features included in the PT Vessel Vent System are as follows:

- Cell to be lined with stainless steel and provided with a washing system for decontamination purposes.
- Cell to be provided with a shielded access plug to allow the use of observation equipment.
- The design of the vessel vent lines will take into consideration the hydrostatic level (to prevent liquid from entering the system).
- The collection piping conveying vent system off-gases from the vessel vents, RFD's, and PJMs will be designed and routed in accordance with the Process Piping Design Guide.
- Traps will be fitted with water flush capability in order to clear any potential line blockages.
- The local drainage sump will have an alarm/start set point to prevent flooding.

PT System 550: Pretreatment Plant Wash and Effluent Collection

1. Introduction and Scope

Pretreatment effluent collection, PT System 550, receives effluent for storage and transfer. The effluent includes plant wash from pretreatment vessels and sumps, as well as acidic and alkaline effluent generated during pretreatment. Major plant items in this system include vessels, breakpots, and sumps.

For this system description, refer to process flow diagram (PFD) *Pretreatment Effluent Collection*, DWG-W375PT-PR00015.

2. Description

The collection of pretreatment effluent streams involves the culmination of various effluent subsystems. The functional purpose of each subsystem is to receive, store, and transfer effluent. In serving its functional purpose, each of the subsystems perform some of the following unit operations (not all apply):

- Monitor effluent collection
- Mix effluent
- Sample effluent
- Neutralize effluent
- Recycle effluent

The major sources of plant wash, acidic effluent, and alkaline effluent are listed below (BNFL 2000):

- Plant wash from pretreatment vessels, cells, and bulges
- Decontamination effluent from high-level waste (HLW) containers
- Plant wash from HLW vitrification vessels and cells
- Samples from sumps
- Condensate from vessel vent header
- Drains from LAW transfer lines
- Cleaning liquor from low-activity waste (LAW) ultrafilters
- Caustic rinse from cesium ion exchange columns
- Process condensate from cesium evaporator overheads
- Scrub solution from vessel vent scrubber
- Drains from vessel vent high-efficiency mist eliminators (HEMEs)
- Effluent from vessel vent HEME seal pots
- Drains from reagent bulges

Plant wash is recycled along with acidic and alkaline effluent to LAW feed evaporation.

Table 1 summarizes the effluent sources, functional purpose, unit operations, and destinations for the pretreatment effluent collection system.

The following subsections describe the makeup of each type of effluent in greater detail.

2.1. Plant Wash and Drains

Potentially high-active plant wash and drains are received in the plant wash vessel (V15009) prior to transfer.

2.1.1. Plant Wash Vessel

During normal operations, vessel V15009 receives plant wash from the following source:

- Container decontamination effluent via breakpot V35008 from HLW vitrification decon effluent collection vessel (V35009).

During non-routine operations, vessel V15009 receives plant wash from the following sources:

- Plant wash solution from interior surfaces of pretreatment vessels[1] via vessel-emptying ejectors discharging to plant wash breakpots V15001 through V15008, V15030, or V15031.

- Plant wash solution from LAW pretreatment cell walls, equipment exterior surfaces, and cell cladding via sump-emptying ejectors W15320, W15322, W15324, W15326, W15328, W15330, W15332, W15333, W15335, W15337, W15339, W15341, W15343, W15344, W15346, W15348, W15349, W15351, W15352, W15354, W15356, W15358, and W15360 discharging to plant wash breakpots.

- Drains from plant wash bulges.

- Sump samples from pretreatment sump sample collection vessel (V15010).

- Condensate via breakpot V15008 from pretreatment RFD/mixer vent header collection vessel (V15038) and pretreatment vessel vent header collection vessel (V15052).

- Plant wash solution via breakpot V35008 from HLW vitrification plant wash and drains vessel (V35003).

- Pipe and annulus drains from LAW transfer lines.

During off-normal operations, vessel V15009 receives plant wash from the following sources:

- Active effluent from non-radioactive liquid effluent tank (T05001).

- Active condensate from low pressure condensate header.

- Overflows from LAW feed evaporator feed vessels (V11001A/B), LAW feed evaporator process condensate pot (V11005), line flush make-up vessel (V11027), HLW effluent collection vessel (V12002), LAW feed evaporator concentrate buffer (V12010A/B), LAW ultrafiltration feed vessels (V12011A/B), LAW ultrafiltration permeate hold vessels (V12015A/B), entrained solids hold vessels (V12016A/B), flush supply vessel (V12119), caustic rinse collection tank (V13008), cesium reagent tank (V13022), cesium eluate receipt vessel (V13024B), cesium eluant vessel (V13027B), fresh resin

[1] Excluding envelope D receipt vessels (V12001A-F), HLW effluent collection vessel (V12002), HLW ultrafiltration feed vessels (V12004A/B), HLW feed blending vessel (V12007), cesium eluate evaporator kettle (V13026), cesium and technetium concentrate storage tank (V13073).

addition air gap vessels (V13148 through V13151 and V13156), vessel V15010, primary acidic/alkaline effluent vessel (V15013), and secondary acidic/alkaline effluent vessel (V15018).

- Overflow via dip tube from vessel vent scrub collection vessel (V15044).

An air in-bleed is provided to dilute hydrogen generated through radiolysis in vessel V15009. The level (L-150140 and L-150141), temperature (T-150142), and pH (A-150145) in vessel V15009, as well as the temperature (T-15045A through H, T-15045J through K) in each of the ten plant wash breakpots, are monitored in the central control room (CCR). Pulse-jet mixers V15037 and V15058 through V15065 are used to provide a uniform mixture during neutralization within vessel V15009. RFD P15001 supplies a representative sample of the vessel contents for pH measurement. Excess acidic effluent is neutralized with sodium hydroxide supplied from a reagent bulge. Wash rings are used for vessel and breakpot washing. Vessel-emptying ejector W15003 is used for non-routine transfers to the secondary acidic/alkaline effluent vessel (V15018) via breakpot V15017.

RFD P15001 also supplies a representative sample of the contents of vessel V15009 for analysis. If the pH is confirmed to approximately 8 or above, reverse flow diverters (RFDs) P15017A/B or P15016A/B transfer the effluent from vessel V15009 to the following destinations for recycle:

- LAW feed evaporator feed vessels (V11001A or B, respectively). Normally, vessel V15009 has priority over vessels V15013 and V15018 when transferring effluent to vessel V11001A or B.

Vessel V15009 vents to the vessel vent scrubber (C15001) via the vessel vent header, and overflows to cell sump F15540. The level in the sump is monitored in the CCR. Ejector W15354 is used to transfer the sump contents to vessel V15009. Breakpots V15001 through V15008, V15030, and V15031 vent to scrubber C15001 via the vessel vent header, and overflow to vessel V15009.

2.2. Acidic/Alkaline Effluent

High-active acidic and alkaline effluent is received, stored, and neutralized in the primary acidic/alkaline effluent vessel (V15013) or the secondary acidic/alkaline effluent vessel (V15018) prior to transfer.

2.2.1. Primary Acidic/Alkaline Effluent Vessel

During normal operations, vessel V15013 receives acidic/alkaline effluent from the following sources:

- Acidic and alkaline cleaning liquor via breakpot V15012 from LAW ultrafiltration feed vessel (V12011A).

- Caustic rinse from cesium ion exchange columns (C13001, C13002, C13003, C13004 & C13011).

- Process condensate from cesium ion exchange via process condensate breakpot (V13029).

- Scrub solution via breakpot V15012 from vessel vent scrub collection vessel (V15044).

- Drains via dip tube from vessel vent HEMEs (V15048A/B and V15304A/B/C/D).

- Effluent via breakpots V15312, V15310, and V15309 from vessel vent HEME seal pots (V15301A/B and V15302A/B, V15303A/B/C/D, and V15305A/B/C/D, respectively)

- Nitric acid, strontium nitrate, sodium permanganate, sodium nitrite, and sodium hydroxide drains from reagent bulges.

During non-routine operations, vessel V15013 receives acidic/alkaline effluent from the following sources:

- Caustic rinse from cesium ion exchange via caustic rinse collection tank (V13008).

- Scrub solution purge via breakpot V15012 from vessel vent scrubber (C15001).

During off-normal operations, vessel V15013 receives acidic effluent from the following sources following verification of compatibility with existing alkaline effluent:

- Nitric acid solutions via breakpot V15012 from in-situ decontamination of remotely maintainable pumps.

- Nitric acid solutions from decontamination vessel (V14001) and pump bowl decontamination vessel (V14003) within the maintenance facility.

An air in-bleed is provided to dilute hydrogen generated through radiolysis in vessel V15013. The level (L-150001 and L-150007), temperature (T-150002), and pH (A-150003) in vessel V15013, as well as the temperature (T-15033A through D) in each of the four primary acidic/alkaline effluent breakpots, are monitored in the CCR. Pulse-jet mixers V15014, V15015, V15053 through V15056, V15210, and V15211 are used to provide a uniform mixture during neutralization within vessel V15013. RFD P15038 supplies a representative sample of the vessel contents for pH measurement. Excess acidic effluent is neutralized with sodium hydroxide supplied from a reagent bulge. Wash rings are used for vessel and breakpot washing. Vessel-emptying ejector W15009 is used for non-routine transfers to the plant wash vessel (V15009).

RFD P15038 also supplies a representative sample of the contents of vessel V15013 for analysis. If the pH is confirmed to be approximately 8 or above, RFDs P15026A/B or P15002A/B transfer the high-active effluent from vessel V15013 to the following destinations for recycle:

- LAW feed evaporator feed vessels (V11001A or B, respectively).

Vessel V15013 vents to the vessel vent scrubber (C15001) via the vessel vent header, overflows to the secondary acidic/alkaline effluent vessel (V15018), and ultimately overflows to vessel V15009. Breakpots V15012, V15309, V15310, and V15312 vent to scrubber C15001 via the vessel vent header, and overflow to vessel V15013.

2.2.2. Secondary Acidic/Alkaline Effluent Vessel

During normal operations, vessel V15018 receives acidic/alkaline effluent from the following sources:

- Acidic and alkaline cleaning liquor via breakpot V15017 from LAW ultrafiltration feed vessel (V12011B).

An air in-bleed is provided to dilute hydrogen generated through radiolysis in vessel V15018. The level (L-150010 and L-150011), temperature (T-150015), and pH (A-150014) in vessel V15018, as well as the temperature (T-150012) in breakpot V15017, are monitored in the CCR. Pulse-jet mixers V15019

through V15025, and V15040 are used to provide a uniform mixture during neutralization within vessel V15018. RFD P15037 supplies a representative sample of the vessel contents for pH measurement. Excess acidic effluent is neutralized with sodium hydroxide supplied from a reagent bulge. Wash rings are used for vessel and breakpot washing. Vessel-emptying ejector W15019 is used for non-routine transfers to the plant wash vessel (V15009).

RFD 15037 also supplies a representative sample of the contents of vessel V15018 for analysis. If the pH is confirmed to be approximately 8 or above, RFDs P15003A/B or P15004A/B transfer the high-active effluent from vessel V15018 to the following destinations for recycle:

- LAW feed evaporator feed vessels (V11001A or B, respectively).

Vessel V15018 vents to the vessel vent scrubber (C15001) via the vessel vent header, overflows to the primary acidic/alkaline effluent vessel (V15013), and ultimately overflows to vessel V15009. Breakpot V15017 vents to scrubber C15001 via the vessel vent header, and overflows to vessel V15018.

3. Functions

Table 2 summarizes the functions in the pretreatment effluent collection system.

4. Normal Operations

Each major plant item within the pretreatment effluent collection system must follow a predetermined process control system sequence to reliably perform its functional purpose. Each step in the process control system sequence is affected when an inhibit or trip is reached.

Table 3 outlines the process control system sequences and the associated inhibits and trips for each major plant item within the pretreatment effluent collection system during normal operations and non-routine operations.

5. Safety and Interlock Requirements

The interlock features necessary to maintain safety have not been defined at this design stage. Table 4 provides a preliminary overview of the interlock features necessary to maintain operability.

Table 1. Pretreatment Effluent Collection Summary

Receipt Vessel	Effluent Sources	Functional Purpose	Unit Operations Performed	Effluent Destination
V15009	T05001 (active)	Receive effluent.	Monitor effluent collection.	
	V11001A/B (overflow)	Store effluent.	Mix effluent.	
	V11005 (overflow)		Sample effluent.	
	V11027 (overflow)		Neutralize effluent.	
	V12002 (overflow)	Transfer effluent.	Recycle effluent.	V11001A/B
	V12010A/B (overflow)			
	V12011A/B (overflow)			
	V12015A/B (overflow)			
	V12016A/B (overflow)			
	V12119 (overflow)			
	V13008 (overflow)			
	V13022 (overflow)			
	V13024B (overflow)			
	V13027B (overflow)			
	V13148 to 151 & 156 (overflow)			
	V15010 (sample/overflow)			
	V15013 (overflow)			
	V15018 (overflow)			
	V15038 (condensate)			
	V15044 (overflow)			
	V15052 (condensate)			
	V35003 (plant wash)			
	V35009 (decon)			
	V15001 to 8 (plant wash/overflow)			
	V15030 to 31 (plant wash/overflow)			
	LAW transfer line (drain)			
	LP condensate header (active)			
	Vessels, cells & bulges (plant wash)			

Table 1. Pretreatment Effluent Collection Summary

Receipt Vessel	Effluent Sources	Functional Purpose	Unit Operations Performed	Effluent Destination
V15013	V12011A (acidic/alkaline)	Receive effluent.	Monitor effluent collection.	
	C13001 to 4 (alkaline) C13011 (alkaline) V13008 (alkaline)	Store effluent.	Mix effluent. Sample effluent. Neutralize effluent.	
	V13029 (acidic) V14001 (decon) V14003 (decon) C15001 (purge) V15012 (plant wash/overflow) V15044 (alkaline) V15048A/B (drain) V15301A/B (alkaline) V15302A/B (alkaline) V15303A/B/C/D (alkaline) V15304A/B/C/D (drain) V15305A/B/C/D (alkaline) V15309 to 10 (plant wash/overflow) V15312 (plant wash/overflow) Reagent bulges (drain) Remote maintainable pumps (decon)	Transfer effluent.	Recycle effluent.	V11001A/B
V15018	V12011B (acidic/alkaline) V15017 (plant wash/overflow)	Receive effluent.	Monitor effluent collection.	
		Store effluent.	Mix effluent. Sample effluent. Neutralize effluent.	
		Transfer effluent.	Recycle effluent.	V11001A/B

Table 2. Non-Safety-Related Functions for Pretreatment Effluent Collection

Plant Item	SSCs	Function
V15001-8, V15030-31	T-15045A-H T-15045J-K	Detect high temperature in ejector discharge following transfer.
	Overflow line	Remove liquid prior to backing up into vent system.
V15009	A-150145	Detect low pH prior to transferring.
	L-150140-141	Detect high level prior to overflowing or low level prior to emptying.
	T-150142	Detect high temperature prior to transferring.
	V15037, 58-65	Provide uniformity during pH measurement, neutralization, and sampling, and prevent solids accumulation prior to interference with RFD operations.
	Overflow line	Remove liquid prior to backing up into vent system.
V15012 V15309-10, 12	T-15033A T-15033B-D	Detect high temperature in ejector discharge following transfer.
	Overflow line	Remove liquid prior to backing up into vent system.
V15013	A-150003	Detect low pH prior to transferring.
	L-150001, 7	Detect high level prior to overflowing or low level prior to emptying.
	T-150002	Detect high temperature prior to transferring.
	V15014, 15, 53-56, 210, 211	Provide uniformity during pH measurement, neutralization, and sampling, and prevent solids accumulation prior to interference with RFD operations.
	Overflow line	Remove liquid prior to backing up into vent system.
V15017	T-150012	Detect high temperature in ejector discharge following transfer.
	Overflow line	Remove liquid prior to backing up into vent system.
V15018	A-150014	Detect low pH prior to transferring.
	L-150010, 11	Detect high level prior to overflowing or low level prior to emptying.
	T-150015	Detect high temperature prior to transferring.
	V15019-25, 40	Provide uniformity during pH measurement, neutralization, and sampling, and prevent solids accumulation prior to interference with RFD operations.
	Overflow line	Remove liquid prior to backing up into vent system.

Table 3. Normal Operations for Pretreatment Effluent Collection

Plant Item	Operation	Process Control System Sequence	Inhibits and Trips
V15001-8, V15009, V15030-31	Receipt[1]	Start vessel-emptying ejector to transfer plant wash.	Inhibit transfer on high level in V15009, from ejectors discharging to same breakpot simultaneously, or during sampling/analysis or discharge from V15009. Stop ejector on high temperature in V15001-8 or V15030-31, or low level in supply vessel.
		Start sump-emptying ejector to transfer plant wash.	Inhibit transfer on high level in V15009, from ejectors discharging to same breakpot simultaneously, or during sampling/analysis or discharge from V15009. Stop ejector on high temperature in V15001-8 or V15030-31, or low level in supply sump.
		Start ejector in V15010 to transfer sump samples.	Inhibit transfer on high level in V15009, from ejectors discharging to same breakpot simultaneously, or during sampling/analysis or discharge from V15009. Stop ejector on high temperature in breakpot, or low level in V15010.
		Start ejector in V15038 or V15052 to transfer condensate.	Inhibit transfer on high level in V15009, from ejectors discharging to same breakpot simultaneously, or during sampling/analysis or discharge from V15009. Stop ejector on high temperature in V15008, or low level in V15038 or V15052.
V15009	Receipt[2]	Start ejector in V35009 to transfer container decon effluent.	Inhibit transfer on high level in V15009, during sampling/analysis or discharge from V15009, or without permissive from pretreatment. Stop ejector on high temperature in breakpot, or low level in V35009.
		Open 3-way valves in plant wash bulge from feed to drain position to drain plant wash, and switchback to feed position to feed plant wash.	Inhibit transfer on high level in V15009, or during sampling/analysis or discharge from V15009.
		Start ejector in V35003 to transfer plant wash.	Inhibit transfer on high level in V15009, during sampling/analysis or discharge from V15009, or without permissive from pretreatment. Stop ejector on high temperature in breakpot, or low level in V35003.
		Open LAW transfer line valves to drain pipe and annulus.	Inhibit transfer on high level in V15009, or during sampling/analysis or discharge from V15009.

Table 3. Normal Operations for Pretreatment Effluent Collection

Plant Item	Operation	Process Control System Sequence	Inhibits and Trips
V15009	Storage	Start/stop RFD P15001 to provide sample for pH measurement. Open NaOH feed valve to adjust pH as required.	Inhibit sampling for pH measurement and NaOH feed on low level in V15009, or low air pressure to RFD or mixer jet pumps. Close valve on high totalized flow or high pH (above 8) in V15009.
		Start RFD P15001 to provide sample for analysis.	Inhibit sampling for analysis on low level in V15009, low air pressure to RFD or mixer jet pumps, or during receipt in V15009. Stop RFD on completion of auto-sampler cycle.
	Transfer	Start RFD P15017A or B or RFD P15016A or B to transfer effluent to V11001A or B, respectively.	Inhibit transfer on low pH (below 8) in V15009, on high level in V11001A or B, or during receipt in V15009. Stop RFD on low level in V15009.
V15012, V15013	Receipt[1]	Start ejector in V12011A to transfer acidic & alkaline cleaning liquor.	Inhibit transfer on high level in V15013, from ejectors discharging to V15012 simultaneously, or during sampling/analysis or discharge from V15013. Stop ejector on high temperature in V15012 or low level in V12011A.
		Start ejector in V15044 to transfer scrub solution.	Inhibit transfer on high level in V15013, from ejectors discharging to V15012 simultaneously, or during sampling/analysis or discharge from V15013. Stop ejector on high temperature in V15012 or low level in V15044.
		Start ejector in C15001 to purge scrubber.	Inhibit transfer on high level in V15013, from ejectors discharging to V15012 simultaneously, or during sampling/analysis or discharge from V15013. Stop ejector on high temperature in V15012 or on completion of scrubber purge cycle.
V15013, V15309, V15310, V15312	Receipt	Start ejector in seal pots V15301A & 2A, V15301B & 2B, V15303A & 5A, V15303B & 5B, V15303C & 5C, or V15303D & 5D to place HEME in operation.	Inhibit transfer on high level in V15013, from ejectors discharging to V15309-310 or V15312 simultaneously, or during sampling/analysis or discharge from V15013. Stop ejector on high temperature in V15309-310 or V15312, or low level in seal pot.

Table 3. Normal Operations for Pretreatment Effluent Collection

Plant Item	Operation	Process Control System Sequence	Inhibits and Trips
V15013	Receipt[2]	Start V13008 RFD and/or open valve from C13001-4 & C13011 to recycle caustic rinse.	Inhibit transfer on high level in V15013, or during sampling/analysis or discharge from V15013. Close valve and/or stop RFD on low level in V13008.
		Start RFD in V13029 to transfer process condensate from nitric acid recovery.	Inhibit transfer on high level in V15013, or during sampling/analysis or discharge from V15013. Stop RFD on low level in V13029.
		Switch 3-way valves in reagent bulge from feed to drain position to drain reagent, and switchback to feed position to feed reagent.	Inhibit transfer on high level in V15013, or during sampling/analysis or discharge from V15013.
	Storage	Start/stop RFD P15038 to provide sample for pH measurement. Open NaOH feed valve to adjust pH as required.	Inhibit sampling for pH measurement and NaOH feed on low level in V15013, or low air pressure to RFD or mixer jet pumps. Close valve on high totalized flow or high pH (above 8) in V15013.
		Start RFD P15038 to provide sample for analysis.	Inhibit sampling for analysis on low level in V15013, low air pressure to RFD or mixer jet pumps, or during receipt in V15013. Stop RFD on completion of auto-sampler cycle.
	Transfer	Start RFD P15026A or B or RFD P15002A or B to transfer high-active effluent to V11001A or B, respectively.	Inhibit transfer on low pH (below 8) in V15013, on high level in V11001A or B, or during receipt in V15013. Stop RFD on low level in V15013.
V15017, V15018	Receipt	Start ejector in V12011B to transfer acidic & alkaline cleaning liquor.	Inhibit transfer on high level in V15018, or during sampling/analysis or discharge from V15018. Stop ejector on high temperature in V15017 or low level in V12011B.
V15018	Storage	Start/stop RFD P15037 to provide sample for pH measurement. Open NaOH feed valve to adjust pH as required.	Inhibit sampling for pH measurement and NaOH feed on low level in V15018, or low air pressure to RFD or mixer jet pumps. Close valve on high totalized flow or high pH (above 8) in V15018.
		Start RFD P15037 to provide sample for analysis.	Inhibit sampling for analysis on low level in V15018, or low air pressure to RFD or mixer jet pumps, or during receipt in V15018. Stop RFD on completion of auto-sampler cycle.
V15018	Transfer	Start RFD P15003A or B or RFD P15004A or B to transfer high-active effluent to V11001A or B, respectively.	Inhibit transfer on low pH (below 8) in V15018, on high level in V11001A or B, or during receipt in V15018. Stop RFD on low level in V15018.

1 Steps may occur in any order.

2 Steps may occur in any order or simultaneously.

Table 4. Operability Interlocks for Pretreatment Effluent Collection

Plant Item	Condition	Interlocks
V15001-8, V15030, V15031	High-high temperature	Stop emptying ejector in vessels and sumps.
V15009	High-high level	Stop ejector in V35003 & V35009, and stop emptying ejector in vessels and sumps.
	Low-low level	Stop RFDs P15001, P15016A/B & P15017A/B; and stop ejector W15003.
	High-high temperature	Stop RFDs P15016A/B & P15017A/B.
	High-high pH	Close NaOH feed valve.
V15012	High-high temperature	Stop ejector in V12011A, V15044 & C15001.
V15309, V15310, V15312	High-high temperature	Stop ejector in V15301A/B, V15302A/B, V15303A/B/C/D & V15305A/B/C/D.
V15013	High-high level	Stop ejector in V12011A, V15044, V15301A/B, V15302A/B, V15303A/B/C/D, V15305A/B/C/D & C15001; close valve from C13001-4 & C13011 and/or stop RFD in V13008; and stop RFD in V13029.
	Low-low level	Stop RFDs P15002A/B, P15026A/B & P15038, and stop ejector W15009.
	High-high temperature	Stop RFDs P15002A/B & P15026A/B.
V15013	High-high pH	Close NaOH feed valve.
V15017	High-high temperature	Stop ejector W15003, and ejector in V12011B.
V15018	High-high level	Stop ejector in V12011B.
	Low-low level	Stop RFDs P15003A/B, P15004A/B & P15037, and stop ejector W15019.
	High-high temperature	Stop RFDs P15003A/B & P15004A/B.
	High-high pH	Close NaOH feed valve.